REFUSE PILE EXPANSION AMENDMENT

DUGOUT CANYON MINE
C/007/039

FEBRUARY 2005

Canyon Fuel Company, LLC
P.O. Box 1029
Wellington, UT 84542

File in:
☐ Confidential
☐ Shelf
☒ Expandable
Refer to Record No 0016 Date 02182005
In C/0070039 Incoming
For additional information

CHAPTER 2

SOILS

TABLE OF CONTENTS

Section — Page

CHAPTER 2 2-1

210 INTRODUCTION 2-1

220 ENVIRONMENTAL DESCRIPTION 2-1

221 Prime Farmland Investigation 2-1
222 Soil Survey 2-2
222.100 Soils Map 2-2
222.200 Soil Identification 2-2
222.300 Soil Description 2-3
222.400 Soil Productivity 2-3
223 Soil Characterization 2-5
224 Substitute Topsoil 2-5

230 OPERATION PLAN 2-5

231 General Requirements 2-5
231.100 Removing and Storing Soil Methods 2-5
231.200 Suitability of Topsoil Substitutes/Supplements 2-6
231.300 Testing of Topsoil Handling and Reclamation Procedures Regarding Revegetation 2-6
231.400 Construction, Modification, Use, and Maintenance of Topsoil Storage Piles 2-7
232 Topsoil and Subsoil Removal 2-7
232.100 Topsoil Removal and Segregation 2-7
232.200 Poor Topsoil 2-7
232.300 Thin Topsoil 2-8
232.400 Minor Disturbances Not Requiring Topsoil Removal 2-8
232.500 Subsoil Segregation 2-8
232.600 Timing 2-8
232.700 Topsoil and Subsoil Removal Under Adverse Conditions 2-8
233 Topsoil Substitutes and Supplements 2-9
233.100 Overburden Materials Supplementing and/or Replacing Topsoil 2-9
233.200 Suitability of Topsoil Substitutes and Supplements 2-9
233.300 Physical and Chemical Analyses 2-9
233.400 Testing of Substitute Topsoil 2-10
234 Topsoil Storage 2-10

TABLE OF CONTENTS (Continued)

Section — Page

234.100 Topsoil Stockpiling 2-10
234.200 Stockpiled Topsoil 2-11
234.300 Topsoil Stockpile Relocation 2-12

240 RECLAMATION PLAN 2-12

241 General Requirements 2-12
242 Soil Redistribution 2-13
242.100 Soil Redistribution Practices 2-13
242.200 Regrading 2-14
242.300 Topsoil Redistribution on Impoundments and Roads 2-15
243 Soil Nutrients and Amendments 2-15
244 Soil Stabilization 2-15
244.100 Protection and Stabilization of Surface Areas 2-15
244.200 Mulch Application 2-16
244.300 Rills and Gullies 2-16

250 PERFORMANCE STANDARDS 2-16

251 Topsoil, Subsoil, and Topsoil Supplements Management 2-16
252 Stockpiled Topsoil and Subsoil 2-16

REFERENCES 2-17

LIST OF TABLES

Table 2-1 Soil Map Unit Features 2-18
Table 2-2 Soil Salvage Volumes 2-19

LIST OF PLATES

RA Plate 2-1 Soils Map
~~RA Plate 2-2 Soil Stockpiles~~

LIST OF ATTACHMENTS

RA Attachment 2-1 Soils Report
RA Attachment 2-2 Soil Volume Calculations

CHAPTER 2
SOILS

210 INTRODUCTION

This chapter and associated appendices address the pertinent data required for the ~~addition of a~~ refuse pile site for the Dugout Canyon Mine. The M&RP and this document contain pertinent information relating to identification, management, and reclamation activities associated with the soil resources present in the disturbed area of the Dugout Canyon Mine. The soil studies were conducted in accordance with the Utah Division of Oil, Gas, and Mining guidelines that were in effect at the time each study was conducted. The site specific soil survey conducted for this permit application was conducted in accordance with the standards set by the National Cooperative Soil Survey and analyzed according to Table 1 of the Division's "Guidelines for the Management of Topsoil and Overburden for Underground and Surface Coal Mining" (Leatherwood and Duce, 1988).

220 ENVIRONMENTAL DESCRIPTION

The site is located at an elevation of about 5,900 feet on a well-drained bench (pediment) composed of gravelly to stony alluvial deposits, which overlie the Mancos Shale formation. Pinyon-Juniper, sagebrush, and various grasses are the dominant vegetation in the area. Climatological information is provided in RA Attachment 7-5.

221 Prime Farmland Investigation

Refer to a letter included in RA Attachment 3-1, which states that the area of the Dugout Canyon Road cannot be considered as prime farmland and the refuse pile area is immediately adjacent to the road.

222 Soil Survey

222.100 Soils Map

A description of the soils within the refuse pile area on an Order III soil survey level can be found in the SCS "Soil Survey of the Carbon County Area" (Jensen, 1988). A copy of the soil descriptions from the Order III survey has been included in Appendix S-5 of RA Attachment 2-1. Information pertaining to the soils associated with the construction of the sediment pond emergency spillway ~~will be~~ is included in RA Attachment 2-1 once the data ~~has been~~ was collected and reported by soil scientist Dan Larsen. No disturbance to the spillway area soils will occur until the information has been collected for incorporated into the attachment, including soil descriptions and estimated salvage quantities.

An Order I soil survey was conducted of the refuse pile site in September 1999. Descriptions of the site soils are derived from ten pit locations and twenty-two soil samples. Based on the soil descriptions and other site observations, thirteen soil map units have been identified. The map units are shown on RA Plate 2-1 and in RA Attachment 2-1. The locations of the soil test pits excavated during the survey are shown on Map SM-1, RA Attachment 2-1.

222.200 Soil Identification

Following is a list of the soils found in the general area of the storage area as mapped by the SCS (Jensen, 1988).

Map Unit	Soil Identification
33	Gerst-Badland-Rubbleland complex, 15 to 50 percent slopes,
48	Haverdad loam, 1 to 8 percent slopes,
49	Haverdad loam, alkali, 0 to 3 percent slopes,
50	Haverdad loam, moist, 1 to 5 percent slopes,

66 Mivida gravelly fine sandy loam, 3 to 8 percent slopes

113 Strych stony loam, 3 to 15 percent slopes.

The SCS descriptions for the ~~se three~~ soils are included in Appendix S-5 of Attachment 2-1.

222.300 Soil Description

The description of the soils is based on the following information: taxonomic classification, horizon name and depth, color, texture (percent sand, silt, and clay), consistence, structure, percent rock fragments and organic matter, saturation, pH, EC, SAR, and solubility of calcium, magnesium, and sodium. This information is included in the soil test pit logs in Attachment 2-1, Appendix S1 and the lab data sheets included in Attachment 2-1, Appendix S3 of this submittal. RA Table 2-1 presents a summary of the soil unit features. The description of soils outside the disturbed area boundary has been taken from the SCS (Jensen, 1988).

The site has gravelly and cobbly soils of the Strych series over much of the area (Jensen, 1988). The project area is primarily disturbed with little evidence of natural soils in place. Original surface soils were stripped by previous site activities. Therefore, the natural soils are basically lacking except at the edges of the site and outside the disturbed area boundary. The remaining soil materials generally consist of coarse alluvium of varying thickness covering the Mancos Shale. In some places the shale is at or near the surface.

222.400 Soil Productivity

The data obtained from soil testing are provided in Appendix S3 of Attachment 2-1. A table showing depth and the number of samples taken from each backhoe pit location (Soil Pits DCW1 through DCW10) can be found in Appendix S3.

A summary of the soil testing results and ratings are provided below:

PH - All samples rated good, with a range of 6.9 to 7.8.

% Saturation - 17 samples rates good (25.1 to 45.3) and 5 samples rated fair (21.6 to 24.9).

Electrical Conductivity - 17 samples rates good (0.038 to 1.93 umhos/cm) and 5 samples rated fair (2.12 to 4.68 umhos/cm).

Sodium Adsorption Ratio - 20 sampled rated good (0.56 to 3.71) and 2 samples rated fair (4.64 and 6.03).

Texture - 12 samples rated good (loam and sandy clay loam) and 10 samples rated fair (clay loam and silty clay loam)

Available Water Capacity - 6 samples rated good (0.11 to 0.14 inches per inch) and 16 samples rated fair (0.05 to 0.10 inches per inch)

Boron - All samples rated good (0.05 to 0.50 ppm)

Selenium - All samples rated good (0.02 ppm or less)

Acid/Base Potential - All samples rated good (90.0 to 282 0 T/1000 tons)

Tests not used in the UDOGM rating criteria indicated low phosphorus, nitrogen, and sulfur levels. Calcium carbonate content is relatively high, with a range of 9.3 to 26.9 percent. Organic matter is low although there are pockets of woody materials in various sample locations. The soils were determined to be acceptable for use in site reclamation.

A summary of the sediment pond spillway soil testing results and ratings for four samples are: pH - samples rated good, with a range of 7.5 to 7.6; % Saturation - samples rates good (26 to 35.4); Electrical Conductivity - samples rated good (0.40 to 0.58 umhos/cm); Sodium Adsorption Ratio - samples rated good (0.53 to 1.05); Texture - samples rated good (sandy loam and sandy clay loam); Available Water Capacity - samples rated good; Boron - samples rated good (0.21 to 0.31 ppm); Selenium - samples rated good (less than 0.02 ppm) and Acid/Base Potential - All samples rated good (115 to 150 t/1000 tons).

223 Soil Characterization

Daniel M. Larsen, Professional Soil Scientist, performed the soil survey described in this chapter and included as Attachment 2-1, in accordance with the standards of the National Cooperative Soil Survey.

224 Substitute Topsoil

All soil resources to be removed from the refuse pile site qualify as growth media but not as topsoil. However, CFC may use selected overburden materials as a substitute or supplement to the salvaged soil.

At the time of reclamation placement, the soil resources salvaged from the site may be supplemented with appropriate amendments, if necessary

230 OPERATION PLAN

231 General Requirements

231.100 Removing and Storing Soil Methods

The refuse pile area has been the site of activities since the early 1900's. At the time of the initial disturbances, topsoil was apparently not salvaged; however during the excavation of gravel in 1998 - 1999 some soil was salvaged. These salvaged soils will be included in the soil stockpiles for the refuse pile. The methods described for soil salvage herein will be followed when removing and storing soil resources currently in-place.

Soil salvage will take place at the beginning of site use for all areas within the disturbed area boundary to be used immediately. There is no disturbance planned for the areas designated as H and J on RA Plate 2-1 except for the area ~~in J~~ to be disturbed for the construction of the

sediment pond emergency spillway. Topsoil and subsoil will be salvaged and stockpiled from the area ~~in "J"~~ disturbed during the construction of the spillway. The removal of salvaged soils will include all horizons, except in soils salvage areas H and J (RA Plate 2-1), where no salvage of soils is currently planned except as state above. These materials will be stored in a graded stockpiles and seeded to promote surface stabilization. The seed mix to be used will be the interim seed mix described in Chapter 3, Section 341.200. At the time of the 1999 Soil and Geotechnical Surveys, the area designated a "L" in the soil survey was described as being a pile of gravel (on top of the soil), the gravel has since been removed from the site (2002). The soils available for salvage in area "L" are assumed to be similar to those in area "M". As recommended by the Division under R645-310-232.500 of the October 24, 2002 Technical Analysis two piles have been created, one stockpile for topsoil and the second for subsoils. Areas D, E, F plus areas K and G designated on RA Plate 2-1 will be salvaged and placed in the topsoil pile. The majority of the salvaged topsoil come from the G and F soil units noted on the soils map. The remainder of the areas to be salvaged will be placed in the subsoil stockpile. Daniel M. Larsen, Professional Soil Scientist was on site during the salvage operations and determined in which pile the salvaged soils were placed.

The operator will endeavor to remove and store as much soil as possible in the designated stockpiles, thereby maximizing the protection of the soil resources of the site. The salvaged soil will be treated in compliance with R614-201-234.300.

231.200 Suitability of Topsoil Substitutes/Supplements

See Section 233.200.

231.300 Testing of Topsoil Handling and Reclamation Procedures Regarding Revegetation

See Sections 232 through 234 and Section 240.

231.400 Construction, Modification, Use, and Maintenance of Topsoil Storage Piles

See Section 234.

232 Topsoil and Subsoil Removal

232.100 Topsoil Removal and Segregation

Due to the disturbed nature of the site area, all available soil materials will be removed and stockpiled, since the soil resource is limited on the site (refer to Section 231.100). RA Plate 2-1 shows the areas of soils to be stripped and the approximate depth ranges for each soil. RA Table 2-2 presents an estimate of the soil materials that are available for salvage from each of the soil units within the proposed disturbed area. Supporting calculations are presented in Attachment 2-2. The estimate is based on an average of the recommendations of Mr. Larsen's soils report presented in Attachment 2-1. During the actual salvaging activities, efforts will be made to maximize the soil volume to be salvaged.

A professional soil scientist will be on-site during soil salvage operations to monitor and supervise salvage activities for the purpose of maximizing soil salvage volumes, quantities and to determine medium to be left in place (i.e. gravel, boulders). Should a professional soil scientist be unavailable, a professional with knowledge and experience in soil salvage (i.e. UDOGM Soil Reclamation Specialist) will be used.

232.200 Poor Topsoil

The soils on the site have been classified as fair to good for sustaining vegetation. Therefore, all available soil materials will be removed and stockpiled.

232.300 Thin Topsoil

Soil that is less than 6 inches thick will be removed with the immediately underlying unconsolidated materials and the mixture will be treated as salvageable soil.

232.400 Minor Disturbances Not Requiring Topsoil Removal

Small Structures. Soil will not be removed prior to construction that would result in only minor disturbances. Such construction activity includes work on small structures such as signs, fence lines, and etc.

Vegetation. The operator will not remove soil for minor disturbances where such activity will ~~not~~ destroy vegetation or cause erosion.

232.500 Subsoil Segregation

The soil horizons will be removed and stockpiled together during the construction of the site, as described in Section 234.

232.600 Timing

Soil removal will take place after all vegetation that could interfere with soil salvage has been removed.

232.700 Topsoil and Subsoil Removal Under Adverse Conditions

Due to the disturbed nature of the site, soil horizons will be removed together, except where natural conditions render operations hazardous or detrimental to soils outside the disturbed area.

Conventional Machines. In localities where steep grades, adverse terrains, severe rockiness, limited depth of soils, or other adverse conditions exist that render soil removal activities using conventional machines hazardous, soils will not be salvaged and stockpiled.

Substitute Topsoil. ~~Importing of substitute topsoil is not anticipated.~~ Importing of substitute topsoil may be required, refer to Section 233 and 242.

233 Topsoil Substitutes and Supplements

233.100 Overburden Materials Supplementing and/or Replacing Topsoil

Selected overburden materials may be used below the salvaged soils during reclamation operations, if sufficient soil materials are not available for the proposed reclamation activities. Where overburden materials are used, the operator commits to demonstrating to the Division prior to salvaged soil emplacement that the overburden materials are non-toxic, non-acid forming, and non-combustible. Refer to Section 536.200 discussion of waste sampling/testing.

233.200 Suitability of Topsoil Substitutes and Supplements

Topsoil substitutes and supplements may be used for the refuse site area.

233.300 Physical and Chemical Analyses

Topsoil substitutes and supplements may be used for the refuse site area. The rate of sampling for the overburden beneath the soil will be sampled as discussed in Section 536.200.

Certification of Reclamation Topsoil Suitability. ~~Topsoil substitutes and supplements are planned for the refuse site.~~ If substitute topsoil should become necessary, the soil will be certified by an approved laboratory in accordance with at least one of the following: Soil Conservation

Service published data and technical guides, state agricultural agency, Tennessee Valley Authority, BLM - USFS published data, physical and chemical analyses results, field-site trials, or greenhouse tests.

233.400 Testing of Substitute Topsoil

Only the substitute topsoil used in lieu of, or in conjunction with, on-site overburden and soil will be tested as described in Section 233.300.

234 Topsoil Storage

Soils salvaged from the site will be stockpiled on the site. Refer to Plates RA ~~2-2~~ 5-1 and 7-1 for the stockpile location. The estimated volumes of soil to be stockpiled are presented in RA Table 2-2.

234.100 Topsoil Stockpiling

Soil removed will be stockpiled for later use in reclamation operations when it is impractical to promptly redistribute the materials on regraded areas. Refer to Plates RA ~~2-2~~ 5-1 and 7-1 for the location of the soil storage area. Because the soil salvage quantities are estimated, the actual contours and corresponding cross-sections are approximate. The final soil stockpiles will be reflected in the as-built drawings for the site.

It is anticipated that the piles will be constructed in horizontal lifts of 1.5 to 2.0 feet. Tracked equipment will be used to reduce compaction. The stockpiles will be graded to a maximum slope of 2:1 and seeded to promote surface stabilization. The interim reclamation seed mix described in Chapter 3, Section 341.200 will be used for this purpose.

The stockpiles will be kept isolated from the main area of the refuse site to protect the material from contaminants and unnecessary compaction that would interfere with vegetation. A sign will

be installed on the stockpiles to identify one as a topsoil storage area and the second as the subsoil storage area. The stockpiles will be protected from wind and water erosion by being revegetated with a quick growing vegetative cover (~~proposed~~ interim seed mix) and by installing berms around the stockpiles to help trap sediment coming off the stockpiles. The stockpiled soils will be moved if necessary to facilitate the expansion of the waste rock site and for contemporaneous reclamation. Following the expansion, these stockpiled soils will not be moved or disturbed until required for redistribution during contemporaneous reclamation. The boulders designated in area "K" (RA Plate 2-1) will be stockpiled separately from the soils salvaged from the refuse site. The boulders will either be placed along the perimeter of the substitute topsoil pile, access road, on top of the subsoil pile or will be transported to the rock stockpile at the Dugout/Soldier Canyon Mine topsoil stockpile adjacent to the Soldier Canyon Road.

234.200 Stockpiled Topsoil

Stable Stockpile Site. Stockpiled materials will be placed on a stable site as described in Section 234.100.

Protection from Contaminants and Compaction. Stockpiled soil will be protected from contaminants and unnecessary compaction. To protect the soil from contaminants and unnecessary compaction that could interfere with vegetation, the stockpiles will be isolated from the main refuse pile area (Section 234.100). A sign designating "topsoil" will be installed on the stockpile.

The stockpile will be constructed in such a manner as to allow equipment access around the base of the stockpiles for repair of the surfaces and diversion structures as needed.

Furthermore, berms will be constructed around the stockpiles to further separate the soils from the materials stored on the site. The berm will be constructed as specified in Chapter 7.

Wind and Water Erosion Protection. The stockpiles will be protected from wind and water erosion by prompt establishment and maintenance of a vegetative cover. Berms will be constructed around the stockpiles to help trap sediment runoff from the stockpiles. Refer to Section 242 .100 for additional protection information.

Topsoil Redistribution. A limited quantity of stockpiled soil will be distributed on the refuse pile to determine the quantity of soil cover necessary to meet revegetation reclamation requirements. The remainder of the stockpiled soil will not be moved until redistributed during reclamation operations unless approved by the Division.

234.300 Topsoil Stockpile Relocation

Stockpiled soil in jeopardy of being detrimentally affected in terms of its quantity and quality by refuse pile operations may be temporarily redistributed upon approval by the Division and modification of this M&RP. The stockpiled soils will be moved to facilitate the expansion of the waste rock site. Following the expansion, these stockpiled soils will not be moved or disturbed until required for redistribution during contemporaneous and final reclamation.

Host Site. Soil relocation may occur provided that such action does not permanently adversely affect soil of the host site.

Topsoil Suitability. Stockpiled soil relocation may occur provided the material is retained in a condition more suitable for redistribution than if stockpiled.

240 RECLAMATION PLAN

241 General Requirements

Reclamation of the site (soil redistribution, amendments, and stabilization) is discussed in Sections 242, 243, and 244, respectively.

242 Soil Redistribution

242.100 Soil Redistribution Practices

The stored soil will be redistributed after recontouring of the site has occurred during reclamation activities. The exact quantity of the salvageable soil available for use is not known at this time, but has been estimated to be approximately ~~44,300~~ 15,511 CY of subsoil currently salvaged (includes stockpile berms) and 7,298 CY of topsoil salvaged. There is the potential for an additional 5,400 CY of subsoil to be salvaged from beneath the current soil stockpiles. This subsoil will be salvage and stockpiled when and if the soil piles are relocated. During reclamation the destruction of the berms and embankments that create the perimeter ditches and sediment pond will generate approximately 12,900 CY of additional cover material.

Soils will be handled when they are in a loose or friable condition. The moisture content will be visually monitored and water will be added as needed to enhance the soil's condition for handling.

Contemporaneous Reclamation: The applicant is proposing to demonstrate that two feet of cover material over the refuse pile is sufficient to meet reclamation standards for bond release. An area on the refuse pile will receive reclamation treatments contemporaneously to justify the decrease of required cover soils from four feet to two feet for final reclamation. The area will compare reclamation treatments as shown below. Each treatment area will have a West facing slope, an East facing slope and a level area. All treatments will receive the permanent seed mix (excluding seedlings) and seeding, mulching and gouging procedure as approved for final reclamation.

Treatment	Depth of Cover	1st Layer	2nd Layer	Top Layer
A	4 feet	12" subsoil and waste mixed	30" subsoil	6" topsoil

B	3 feet	12" subsoil and waste mixed	18" subsoil	6" topsoil
C	2 feet	12" subsoil and waste mixed	6" subsoil	6" topsoil
D	2 feet	18" subsoil		6" topsoil

The treatment areas will be approximately 20 feet by 55 feet with areas delineated by markers such as roof bolt , etc. approximately every five feet surrounding each treatment area.

Treatment areas will be monitored yearly at the end of the growing season for six years, as shown on the table below. Following the sixth year, monitoring results will be evaluated by UDOGM and the permittee to determine if justification has been provided to reduce the cover materials required for reclamation of the refuse pile. Monitoring will be discontinued following this evaluation. The sampling methods to be used according to the currently approved UDOGM guidelines are: sample adequacy, cover (line interception), density (belt transects or plots) and productivity (clipping and/or NRCS estimation). The Jaccard's Community Coefficient will be used to calculate acceptable plant similarity and diversity.

TREATMENT AREAS "A THROUGH D" MONITORING SCHEDULE

	YEAR					
	1	2	3	4	5	6
QUALITATIVE SAMPLING	X	X	X	X	X	X
QUANTITATIVE SAMPLING						
Cover		X	X		X	X
Frequency		X	X		X	X
Woody Plant Density		X	X		X	X
Productivity			X			X
SOIL SAMPLING			X			X

A soil sample will be taken in the 3rd and 6th years of monitoring. The sample will be taken 6" above the interface of the waste with the subsoils in accordance with the standards set by the National Cooperative Soil Survey and analyzed according to Table 1 of the Division's "Guidelines for the Management of Topsoil and Overburden for Underground and Surface Coal Mining". Monitoring data for soil and vegetation sampling will be included in the mine's annual reports.

Soil Thickness: The topsoil will be distributed to the disturbed areas illustrated on Figure RA 5-1.

Currently, it is planned that the refuse pile portion of the site be covered with approximately 48 inches of soil. Based on the proposed pile configuration this will require about ~~36,700~~ 85,163 CY of soil ~~(current salvage estimates would allow 3.5' of subsoil and 0.5' of substitute topsoil to be placed over refuse pile)~~. The remainder of the site area, ~~9.92 acres,~~ not used for refuse storage will be covered with approximately 6 inches of substitute topsoil. ~~This will require approximately 7,600 CY of soil.~~ Calculations of the soil cover volumes are presented in Attachment 2-2. Soils in the area designated as H and J (approximately 11.2 acres) are not currently planned for salvage, except in the area of the pond spillway (RA Plate 2-1).

The quantity of topsoil and subsoil required to cover the proposed refuse pile configuration are shown in the table below. The application rates for Treatments A, B, and C would incorporate waste rock in the bottom foot of growth medium placed over the refuse. The twelve-inch subsoil and waste layer will be approximately a 50/50 mix. Treatment D, the two-foot application rate would incorporate a smaller quantity of waste rock. All applications would roughen the refuse pile surface prior to applying the bottom layer of subsoil or subsoil/waste rock mix. For example, a four foot cover would include: a bottom foot of growth medium consisting of subsoil mixed with waste rock material, a middle layer of 2.5 feet of subsoil and a 0.5 foot layer of substitute topsoil as the top layer.

Waste Rock Soil Cover Requirements					
Surface Area of Pile to be Covered (ft^2)	Depth	Quantity Needed	Topsoil/ Subsoil Available*	Quantity of Coal Waste to be Mixed	Additional Soils Required
574,850	4 feet	85,163 CY	38,516 CY	10,645 CY	36,002 CY
574,850	3 feet	63,872 CY	38,516 CY	10,645 CY	14,711 CY
574,850	2 feet	42,581 CY	38,516 CY	4,065 CY	----------
Topsoil					
Quantity Stockpiled	Required to Cover Site with 6" of Topsoil, excluding Refuse Pile		Required to Cover Refuse Pile with 6" of Topsoil		Additional Substitute Soils Required
7, 298 CY	2,593 CY		10,645 CY		5,940 CY

* Total includes subsoil stockpiled, estimated additional soils to be salvaged and 4,705 CY of the salvaged topsoil pile. Reference Attachment 2-2 for further explanation of soil materials available to cover the refuse pile.

Compaction. To prevent compaction of topsoil, soil-moving equipment will refrain from unnecessary operation over spread soil. Front-end-loaders and other wheel-mounted equipment may be used to transport and dump soil. However, to minimize compaction, only track-mounted equipment (e.g. bulldozers, trackhoes) will be used to spread the soil. The soil will be loosened prior to seeding as described in Section 341.200.

Erosion. Care will be exercised to ensure the stability of soil on graded slopes to guard against erosion during and after soil application. Erosion control measures will ~~may~~ include but not be limited to extreme surface roughening (also known as pocking and gouging).

242.200 Regrading

Since the site has been disturbed by previous activities and will be used to permanently store coal mine waste, the area will not be returned to the original geometric configuration. Prior to soil

redistribution, the disturbed area will be graded to meet the proposed final reclamation topography (RA Plate 5-3 ~~and RA Plate 5-4~~).

The surface of the refuse pile will be left in a roughened state and in addition will be ripped prior to the application of soil. After the 1st lift of subsoil is placed, the surface of the refuse pile will be ripped again to a depth of approximately 12 inches in an effort to promote root penetration and to mix the top layer of the refuse with the subsoil. Refer to Section 341.200 for further discussion of roughening methods.

The second type of surface consists of roads, perimeter ditches, etc. which may be compacted through their use. The surface will be ripped to a depth of approximately 1.5 to 2 feet with a ripper-equipped tractor or other appropriate equipment where possible to reduce surface compaction, to assure soil adherence, and promote root penetration. Following the ripping of the soils and the application of stockpiled soils, extreme roughening techniques will be applied. A backhoe or trackhoe will be used to create microbasins with a minimum depth of 18" and the width of the bucket. Soil removed to form the microbasins will be dropped approximately 2 to 3 feet above the microbasin onto the soil surface.

242.300 Topsoil Redistribution on Impoundments and Roads

The sedimentation pond and embankment will be breached and reclaimed with the other surface disturbed areas. Similarly, reclamation of abandoned roads will also follow the same technique as for other disturbed areas.

243 Soil Nutrients and Amendments

Soil nutrients and amendments may be applied to the redistributed soil as necessary, to establish the vegetative cover. The type and rate of application will be determined just prior to contemporaneous and final reclamation activities based on analyses of samples collected from the stockpiled soil materials. The soils will, at a minimum, be tested for pH, EC, total carbon, SAR, phosphorus, nitrate-nitrogen, and water holding capacity.

In the event that the topsoil/subsoil piles are moved adjacent to the Dugout Canyon Road in conjunction with the pile expansion, organic matter will be incorporated into topsoil/subsoil piles when the soils are relocated. The type and rate of application will be determined by the applicant and UDOGM reclamation specialists prior to moving the soils.

244 Soil Stabilization

244.100 Protection and Stabilization of Surface Areas

Reclaimed areas will be stabilized to control erosion by application of one or combinations of a mulch, extreme surface roughening, or other appropriate methods. Rills and gullies will be regraded (Refer to Section 244.300). Seeding will be accomplished using BTCA methods suitable for reclamation. These methods may include, but not necessarily limited to: application of seeds, and mulch with a long fiber tackifier. ~~and/or application of biodegradable erosion matting after seeding.~~ Refer to Section 341.200 for a discussion of the seeding and the incorporation of straw/hay into the soil. Additional and more detailed discussions regarding soil protection during and after final reclamation can be found in Chapter 5 of this submittal. Methods of revegetation to be employed at final reclamation at this site are discussed in more detail in Chapter 3.

244.200 Mulch Application

Mulch will be applied as discussed previously in this chapter and for a .further discussion of revegetation practices to be utilized, see Chapter 3 of the approved M&RP.

244.300 Rills and Gullies

Postmining Land Use and Revegetation. Rills and gullies that disrupt the postmining land use or reestablishment of vegetative cover will be regraded and seeded. CFC will fill, regrade, or otherwise stabilize any rills or gullies deeper than nine (9) inches that form in areas that have been regraded and soiled. The areas adjacent to any rills or gullies, which have been filled, regraded or otherwise stabilized, will be reseeded or stabilized accordingly.

Water Quality. Rills and gullies that contribute to the degradation of stream quality will be regraded and be seeded.

250 PERFORMANCE STANDARDS

251 Topsoil, Subsoil, and Topsoil Supplements Management

Topsoil, subsoil, and topsoil supplements shall be managed as outlined in Sections 230 and 240.

252 Stockpiled Topsoil and Subsoil

All stockpiled topsoil and subsoil will be managed according to plans outlined in Sections 230 and 240.

REFERENCES:

Jensen, E. H., and Borchert, J. W., 1988. Soil Survey of Carbon Area, Utah. Soil Conservation Service, United States Department of Agriculture, Washington D.C.

Leatherwood, J., and Duce, D., 1988. Guidelines for Management of Topsoil and Overburden for Underground and Surface Coal Mining. State of Utah Department of Natural Resources, Division of Oil, Gas and Mining.

RA TABLE 2-1

SOIL MAP UNIT FEATURES

Map Unit Symbol	Material	Depth to Shale	Texture	Rock Fragments (%)	Average pH
A	Shale	0 - 6"	Clay loam, silty clay loam	5 - 15	7.5
B	Gravelly Alluvium over Shale	20 - 40"	Loam, clay loam	20 - 60	7.3
C	Gravelly to Stony Alluvium	40 - 100"	Loam, clay loam, sandy clay loam	20 - 60	7.3
D	Non-gravelly Alluvium, some wind blown material	40 - 100"	Loam, clay loam, sandy clay loam	5 - 15	7.5
E	Gravelly Alluvium, small amount of refuse with coal on surface	40 - 100"	Clay loam, loam	15 - 45	7.5
F	Non-gravelly Alluvium (topsoil storage)	40 - 100"	Clay loam, sandy clay loam	5 - 15	7.0
G	Alluvium and woody materials	40 - 100"	Clay loam, sandy clay loam	15 - 30	7.3
H	Relatively Non-gravelly Alluvium (undisturbed)	60 - 100"	Loam, clay loam, sandy clay loam	5 - 25	7.4
I	Cobbly and Gravelly Alluvium	40 - 100"	Sandy clay loam, clay loam	25 - 65	7.5
J	Gravelly to Stony Alluvium over Shale	10 - 40"	Silty clay loam, clay loam, sandy clay loam	10 - 60	7.5
K	Boulders	-*	-	-	-
M	Shale with thin layer of Gravelly Alluvium	4 - 20"	Silty clay loam, sandy clay loam	5 - 40	7.5

* Refer to RA Plate 2-1 for description.

RA TABLE 2-2

SOIL SALVAGE VOLUMES

AREA	VOLUME ANTICIPATED (CY)	VOLUME SALVAGED APPROXIMATE (CY)	
		Topsoil	Subsoil
A	4719		1787
B	14300		5323
C	5467		2778
D	2957	832	
E	4616	1313	1066
F	3393	2423	
G	2603	2595	
I	2356		
K	206		407
M	3700		3857
H & J (Spillway)		135	293
TOTAL	44317 CY	7298 CY	15511 CY

RA ATTACHMENT 2-2

SOIL VOLUME CALCULATIONS

REGISTERED PROFESSIONAL ENGINEER
2-11-05
No. 189797
LAYNE D.
JENSEN
STATE OF UTAH

Reclamation Soil Thickness
Dugout Refuse Pile Site

Area covered by the refuse pile = 533,808 ft^2

To obtain the surface area to be covered by soil the above area must be adjusted to account for the 2:1 slopes of the refuse pile. A 2:1 slope increases the surface area by 11.8%.

Surface area of the pile to be covered = 574,850 ft^2

The refuse pile will be covered with 3 feet of cover material. The cover material will consist of topsoil, subsoil, and a blend of coal waste and subsoil.

The volume of material needed to cover the refuse pile = 63,872 CY

Available Cover Material

There are currently topsoil and subsoil stockpiles located in the northwestern portion of the site. These stockpiles have been surrounded by a full containment berm. Olympus Aerial Surveys estimated the volume in each stockpile as well as the volume of soil in the containment berms.

Topsoil Stockpile volume = 7,298 CY
Subsoil Stockpile volume = 6,508 CY
Berm volume = 2,686 CY

An additional 6,317 CY of subsoil has been stripped from the site since construction of the stockpiles.

Total cover material currently available to be placed in the new stockpiles = 22,809 CY

When the topsoil and subsoil stockpiles are moved additional subsoil may be excavated from the northwest portion of the site. The volume of material available to be stripped has been estimated to be 5,400 CY.

During reclamation the berms and embankments that create the perimeter ditches and sediment pond will be pulled back to blend the undisturbed areas into the reclaimed refuse pile. This process will generate approximately 12,900 CY of additional cover material.

Total available cover material = 41,109 CY

To reduce the volume of imported cover material the bottom foot of cover material will be a blend of coal waste and subsoil. Equal portions of coal waste and subsoil will be used to create this blended cover material. Thus, the volume of available cover material may be increased by 10,645 CY to a total of 51,754 CY.

Volume of cover material to be imported = 12,118 CY

CHAPTER 3

BIOLOGY

340 RECLAMATION PLAN

See the approved M&RP reclamation plan for additional discussion as specified in this amendment.

341 Revegetation

The short-term goal of this revegetation plan is the immediate stabilization of the disturbed sites through erosion control. This objective will be achieved through controlled grading practices, proper seedbed preparation to encourage rapid plant establishment, inclusion of rapidly establishing species in the seed mixture to be planted, and mulch application.

The long-term goals are to establish useful, productive range and wildlife habitat. These goals will be attained through the selection and placement of desirable and productive plant species, and a commitment to monitor and maintain revegetated areas throughout the bond liability period.

341.100 Schedule and Timetable

The reclamation timetable and monitoring schedule are outlined in the approved M&RP. The monitoring outlined for the treatment areas is in Section 242.100.

341.200 Descriptions

Species and Amounts of Seed. The areas disturbed at the refuse pile site will be planted with one of the seed mixes listed below:

single application. On slopes greater than 3:1, the rough, disturbed surface will be treated by traversing a dozer perpendicular to the slope contour to incorporate the nutrients.

All seeds will be broadcast and/or incorporated with a small amount of mulch and applied by hydroseeding equipment. Hydroseeding will be accomplished in two applications, the first being the application of the seed to the soil and the second an application of mulch and tackifier on top of the seed.

Since warm season grasses and cool season grasses are both being planted during the reclamation of the refuse pile area, seeding for final reclamation will be split, warm season grasses will be applied with hydroseeding equipment as described above. Cool season grasses will be broadcast in the late Fall without mulch or tackifier (Personal communication Jerriann Ernstsen, UDOGM, December 20, 2002). Refer to Section 354 for the timing for the seeding.

Mulching Techniques. Following warm season seeding, the seeded areas will be mulched with an organic mulching material. Organic mulch will be applied at the rate of 2000 pounds per acre and anchored with a tackifier.

Irrigation, Pest and Disease Control. No irrigation is planned and pesticides will not be used unless previously approved by the Division.

Measures Proposed for Revegetation Success. Refer to Section 356 and the approved M&RP.

341.300 Greenhouse Studies, Field Trials or Other Equivalent Studies

Refer to the approved M&RP. Refer to Section 242 for information pertaining to a study of contemporaneous reclamation treatments used to provide justification for the reduction of cover necessary to comply with regulation R645-301-553.252.

350 PERFORMANCE STANDARDS

351 General Requirements

CFC commits to conduct all operations in accordance with the plans submitted in Sections R645-301-330 through R645-301-340 of the permit application.

352 Contemporaneous Reclamation

Reclamation activities prior to final reclamation will, to the extent feasible, be performed contemporaneously with refuse storage operations. Two general areas will be contemporaneously reclaimed. These are the soil stockpile and outslope of the refuse pile, once it reaches final configuration. The soil storage area will receive interim seeding following the completion of soil stockpiling. The pile outslope will be covered with soil and seeded with the final vegetation seed mix.

A portion of the refuse pile will receive contemporaneous reclamation, the purpose will be to provide justification for the reduction of cover necessary to comply with regulation R645-301-553.252.

353 Revegetation: General Requirements

A vegetative cover will be established on all reclaimed areas to allow for the designated postmining land use of wildlife habitat and livestock grazing. Refer to Section 411 and the approved M&RP for additional information.

353.100 Vegetative Cover

The seed mix proposed for revegetation is intended to provide vegetative cover that will be diverse, effective, and permanent. The seed mixture was selected with respect to the climate, potential

CHAPTER 5

ENGINEERING

TABLE OF CONTENTS

Section — Page

CHAPTER 5 5-1

510 INTRODUCTION 5-1

511 General Requirements 5-1
512 Certification 5-1
512.100 Cross Sections and Maps 5-1
512.200 Plans and Engineering Designs 5-2
513 Compliance with MSHA Regulations and MSHA Approvals 5-3
513.100 Coal Processing Waste Dams and Embankments 5-3
513.200 Impoundments and Sedimentation Ponds 5-3
513.300 Underground Development Waste, Coal Processing Waste, and Excess Spoil 5-3
513.400 Refuse Piles 5-3
513.500 Underground Openings to the Surface 5-3
513.600 Discharges to Underground Mines 5-4
513.700 Surface Coal Mining and Reclamation Activities 5-4
513.800 Coal Mine Waste Fires 5-4
514 Inspections 5-5
514.100 Excess Spoil 5-5
514.200 Refuse Piles 5-5
514.300 Impoundments 5-5
515 Reporting and Emergency Procedures 5-6
515.100 Slides 5-6
515.200 Impoundment Hazards 5-6
515.300 Temporary Cessation of Operations 5-6

520 OPERATION PLAN 5-7

521 General 5-7
521.100 Cross Sections and Maps 5-7
521.200 Signs and Markers 5-8
522 Coal Recovery 5-9
523 Mining Methods 5-9
524 Blasting and Explosives 5-9
525 Subsidence 5-9
526 Mine Facilities 5-10
526.100 Mine Structures and Facilities 5-10
526.200 Utility Installation and Support Facilities 5-10
527 Transportation Facilities 5-10

TABLE OF CONTENTS (Continued)

Section | Page

527.100 Road Classification 5-10
527.200 Description of Transportation Facilities 5-10
528 Handling and Disposal of Coal, Excess Spoil, and Coal Mine Waste 5-11
529 Management of Mine Openings 5-11

530 OPERATIONAL DESIGN CRITERIA AND PLANS 5-12

531 General 5-12
532 Sediment Control 5-12
533 Impoundments 5-12
533.100 Slope Stability 5-12
533.200 Foundation Considerations 5-13
533.300 Slope Protection 5-13
533.400 Embankment Faces 5-14
533.500 Highwalls 5-14
533.600 MSHA Criteria 5-13533.700 Pond Operation and Maintenance Plans 5-14
534 Roads 5-14
534.100 Location, Design, Construction, Reconstruction, Use, Maintenance, and Reclamation 5-14
534.200 Environmental Protection and Safety 5-15
534.300 Primary Roads 5-15
535 Spoil 5-15
536 Coal Mine Waste 5-15
536.100 Design 5-15
536.200 Waste Emplacement 5-16
537 Regraded Slopes 5-19
537.100 Division Approval 5-19
537.200 Regrading of Settled and Revegetated Fills 5-19

540 RECLAMATION PLAN 5-20

541 General 5-20
541.100 Commitment 5-20
541.200 Surface Coal Mining and Reclamation Activities 5-20
541.300 Underground Coal Mining and Reclamation Activities 5-20
541.400 Environmental Protection Performance Standards Performance Standards 5-20

TABLE OF CONTENTS (Continued)

Section | Page

542 Narratives, Maps, and Plans 5-21
542.100 Reclamation Timetable 5-21
542.200 Plan for Backfilling, Soil Stabilization, Compacting, and Grading 5-21
542.300 Final Surface Configuration Maps and Cross Sections 5-23
542.400 Removal of Temporary Structures 5-23
542.500 Removal of Sedimentation Pond 5-23
542.600 Roads 5-23
542.700 Final Abandonment of Mine Openings and Disposal Areas . 5-23
542.800 Estimated Cost of Reclamation 5-23

550 RECLAMATION DESIGN CRITERIA AND PLANS 5-24

551 Casing and Sealing of Underground Openings 5-24
552 Permanent Features 5-24
552.100 Small Depressions 5-24
552.200 Permanent Impoundments 5-24
553 Backfilling and Grading 5-24
553.100 Disturbed Area Backfilling and Grading 5-24
553.200 Spoil and Waste 5-25
553.250 Refuse Piles 5-26
553.300 Exposed Coal Seams, Acid- and Toxic-Forming Materials, and Combustible Materials 5-26
553.400 Cut-and-Fill Terraces 5-26
553.500 Highwalls From Previously Mined Areas 5-26
553.600 Previously Mined Areas 5-26
553.700 Backfilling and Grading - Thin Overburden 5-26
553.800 Backfilling and Grading - Thick Overburden 5-27
553.900 Regrading of Settled and Revegetated Fills 5-27

560 PERFORMANCE STANDARDS 5-27

LIST OF FIGURES

RA Figure 5-1 Reclamation Timetable 5-28
RA Figure 5-2 Refuse Pile Roads Typical Cross Sections 5-29

TABLE OF CONTENTS (Continued)

LIST OF PLATES

RA Plate 5-1 Storage Area Layout and Cross-Sections
~~RA Plate 5-2 Operational Cross-Sections~~
RA Plate 5-2 Reclamation Topography, Cross-Sections and Treatment Map
~~RA Plate 5-4 Reclamation Cross-Sections~~
~~RA Plate 5-3 Reclamation Topography~~

LIST OF ATTACHMENTS

RA Attachment 5-1 Sediment Pond Slope Stability Evaluation
RA Attachment 5-2 Refuse Pile Slope Stability Evaluation
RA Attachment 5-3 Refuse Pile Volume Calculations
RA Attachment 5-4 Waste Rock Analysis
RA Attachment 5-5 As-Built Topography Map

CHAPTER 5

ENGINEERING

510 INTRODUCTION

This chapter provides a discussion of general engineering aspects, an operation plan, a reclamation plan, design criteria, and performance standards related to the refuse pile. The activities associated with the construction and reclamation of the refuse pile will be designed, located, constructed, maintained, and reclaimed in accordance with the operation and reclamation plans.

511 General Requirements

This permit application includes descriptions of the proposed refuse pile area construction, maintenance, and reclamation operations together with the appropriate maps, plans, and cross sections. Potential environmental impacts as well as methods and calculations utilized to achieve compliance with the design criteria are also presented.

512 Certification

Where required by the regulations, cross sections and maps in this permit application have been prepared by or under the direction of, and certified by, qualified registered professional engineers, geologist or land surveyors. As appropriate, these persons were assisted by experts in the fields of hydrology, geology, biology, etc.

512.100 Cross Sections and Maps

The configuration of the refuse pile and cross sections through the pile are provided on RA Plate~~s~~ 5-1 ~~and 5-2~~ of this submittal. An as-built map of the refuse pile topography (Olympus Aerial Survey, May 2003) is included in Attachment 5-5.

512.200 Plans and Engineering Designs

All plans and engineering designs presented in this submittal were prepared by or under the direction of and certified by a qualified registered professional engineer.

Excess Spoil. No excess spoil will be generated from the refuse pile area.

Durable Rock Fills. No durable rock fills will exist in the refuse pile area.

Coal Mine Waste. If coal mine waste is generated by the Dugout Canyon Mine, it will be placed in the refuse pile site.

Impoundments. A sedimentation pond impoundment ~~will be~~ was built in the refuse pile area (see Section 732).

Primary Roads. The access road to the refuse pile and the temporary road to construct the refuse pile are classified as primary roads.

Variance From Approximate Original Contour. CFC requests a variance from the approximate original contour requirements of the regulations for this site. The main reason for the variance is that placement of refuse will raise the site topography by approximately ~~10~~ 60 feet. The justification for the request is that the site was previously disturbed by the removal of in-place topsoil and gravel. This site functioned as a gravel pit and was used for the construction of the road from Soldier Canyon Road to the Dugout Canyon Mine. After completion of the refuse pile construction, the site will be reclaimed. Additional justification is included in the remainder of this submittal.

513 Compliance with MSHA Regulations and MSHA Approvals

513.100 Coal Processing Waste Dams and Embankments

No coal processing waste dams or embankments will exist within the permit area.

513.200 Impoundments and Sedimentation Ponds

No impoundments or sedimentation ponds in the permit area ~~will~~ meet the size criteria of 30 CFR 77.216(a).

513.300 Underground Development Waste, Coal Processing Waste, and Excess Spoil

If underground development waste is generated by the Dugout Canyon Mine, it will be stored at the refuse pile site. Coal processing waste will be stored at the refuse pile site. No ~~coal processing waste or~~ excess spoil will be generated or stored within this area.

513.400 Refuse Piles

Coal mine waste or underground development waste generated by the Dugout Canyon Mine, will be stored at the refuse pile site. The design of the pile will meet the requirements of MSHA, 30 CFR 77.124 and 30 CFR 77.215 in accordance with Section 536.900.

513.500 Underground Openings to the Surface

No underground openings will be present in this area.

513.600 Discharges to Underground Mines

No discharges to underground mines will occur in this area.

513.700 Surface Coal Mining and Reclamation Activities

No surface coal mining and reclamation activities will occur in this area.

513.800 Coal Mine Waste Fires

If any coal mine waste fires occur within the permit area, these will be reported immediately to MSHA and the Division. Immediate remedial action will be taken as deemed necessary by CFC to protect public health and safety as well as the environment. Following initial remedial efforts, a long-term plan will be formulated in discussion with MSHA and the Division to extinguish any existing fires and prevent future fires.

CFC will utilize a program of prevention and suppression to minimize the potential for coal mine waste fires. An ongoing educational program will emphasize the need for attention to fire prevention. Suppression will occur by separating smoldering material and compacting the adjacent material (to minimize oxygen content in the adjacent material). The burning material will then be extinguished using appropriate methods (see Section 528.300 of the approved M&RP and Section 536.200 of this amendment). No burning mine waste will be removed from the refuse pile area without a removal plan approved by the Division.

514 Inspections

514.100 Excess Spoil

Excess spoil will not be stored in this area.

514.200 Refuse Piles

Quarterly inspections will be made of the refuse pile area (see RA Plate 5-1). These inspections will be performed by a professional engineer or a specialist experienced in the construction of similar earth and waste structures. CFC will provide copies of the certified reports to the Division in the annual report. The report will discuss any appearances of instability, structural weakness, or other hazardous conditions. A copy of this report will be maintained at the mine site.

An MSHA permit ~~will be~~ was obtained before any refuse ~~is~~ was placed in the pile area. All activities performed at this site will be in accordance with the applicable MSHA permit.

514.300 Impoundments

Regular inspections ~~will be~~ were made during construction of the sedimentation pond as well as upon completion of construction. These inspections ~~will be~~ were made by or under the direction of a registered professional engineer experienced in the construction of similar earth and water structures.

Quarterly inspections of the sedimentation pond will continue until removal of the structure or release of the performance bond. An annual certified report of inspection will be prepared by a qualified registered professional engineer and submitted to the Division in the annual report. The report will discuss any appearances of instability, structural weakness or other hazardous conditions, depth and elevation of any impounded waters, existing storage capacity, and existing or required monitoring procedures and instrumentation, and any other aspects of the structure affecting stability. A copy of this report will be maintained at the mine site.

No impoundments are anticipated within the permit area that are subject to 30 CFR 77.216.

515 Reporting and Emergency Procedures

515.100 Slides

If a slide occurs within the refuse pile area that may have a potential adverse effect on the public,

property, health, safety, or the environment, CFC will notify the Division following discovery of the slide and will comply with any remedial measures required by the Division.

515.200 Impoundment Hazards

If any examination or inspection of an impoundment discloses that a potential hazard is associated with that impoundment that may have an adverse effect on the public, property, health, safety, or the environment, the person who examined the impoundment will promptly inform the Division of the finding and of the emergency procedures formulated for public protection and remedial action. If adequate procedures cannot be formulated or implemented, the Division will be notified.

515.300 Temporary Cessation of Operations

Prior to a temporary cessation of operations within the permit area that will last for a period of 30 days or more or as soon as it is known that a temporary cessation will extend beyond 30 days, CFC will submit to the Division a notice of intention to cease or abandon operations. This notice will include the following:

A statement of the number of surface acres affected by mining operations in the permit area prior to cessation of operations,

A discussion of the extent and kind of reclamation activities which will have been accomplished prior to cessation of operations, and

An identification of the backfilling, regrading, revegetation, environmental monitoring, and water treatment activities that will continue during the temporary cessation.

During the temporary cessation, CFC will secure surface facilities in areas in which there are no current operations but where future operations are to be resumed under an approved permit.

520 OPERATION PLAN

521 General

521.100 Cross Sections and Maps

Existing Surface and Subsurface Facilities and Features. No buildings are located in and within 1000 feet of the refuse pile area. No surface or subsurface features are within, passing through or passing over the refuse pile area. An existing county road bypasses the area. The county road lies on land either owned by the State of Utah, the United States of America, or Canyon Fuel Company, LLC (see Plate 1-3 of the approved M&RP).

Landowner, Right-of-Entry, and Public Interest. CFC is the current land owner of the property where the refuse pile is ~~to be~~ built. It ~~will be~~ is located adjacent to the county road to Dugout Canyon. Public access will be limited to the site by construction of a suitable fence and gate. The contiguous surface owners are the United States of America and Canyon Fuel Company, LLC (See Figure RA 1-1B of this submittal). The contiguous subsurface owner is the United States of America (See Figure RA 1-1B of this submittal).

Mining Sequence and Planned . This does not apply to this site (see Section 525).

Land Surface Configuration. Surface contours of undisturbed areas within the storage area are provided on RA Plate 5-1 of this submittal. The initial segment of the refuse pile ~~is being~~ was constructed in a gravel pit. The first four (4) feet of refuse material ~~will be~~ was used to fill a pit and bring it to grade. The remainder of the refuse material will be placed above grade and reach a total pile height of ~~ten (10)~~ sixty (60) feet above portions of the immediate surrounding area as provided on RA Plate 5-1 of this submittal. As shown on RA Plate 1-1, the hills surrounding the site range in elevation from 5887 to 6283, therefore the reclaimed elevation of the refuse pile of 5980 to 6000 will blend with the surrounding area.

Surface Facilities. The surface facilities associated with the refuse pile site include: the refuse pile, temporary material/snow storage areas, soil stockpiles, access road, sedimentation pond, and drainage control structures. Facilities are shown or mentioned on RA Plate 5-1. Detailed

information on sedimentation pond and drainage facilities is presented in Chapter 7 of this submittal. Cross sections of the refuse storage pile(s) are provided on RA Plate 5-1.

Transportation Facilities. A permanent road is not anticipated to be constructed, used, or maintained by CFC in the storage area. During construction of the pile, temporary access roads will be constructed and maintained. The temporary roads will be reclaimed and seeded with the permanent reclamation seed mix (Section 341.200 of this amendment).

521.200 Signs and Markers

Mine and Permit Identification Signs. A mine and permit identification sign will be displayed at the refuse pile site. This sign will be a design that can be easily seen and read, will be made of durable material, will conform to local regulations, and will be maintained until after the release of all bonds for the permit area. The sign will contain the following information:

Mine name,
Company name,
Company address and telephone number,
MSHA identification number, and
Permanent program permit identification number as obtained from the Division.

Perimeter Markers. The perimeter of all areas affected by surface operations ~~will be~~ were clearly marked before beginning mining activities. The markers will be a design that can be easily seen and will be made of durable material, will conform to local regulations, and will be maintained until after the release of all bonds for the permit area.

Buffer Zone Markers. Stream buffer zone markers are not required for this area.

Topsoil Markers. Markers will be placed on all soil stockpiles. These markers will be a design that can be easily seen and read, will be made of durable material, will conform to local regulations, and will be maintained until after the release of all bonds for the permit area.

522 Coal Recovery

No coal recovery will be performed at this site.

523 Mining Methods

No mining will be performed at this site.

524 Blasting and Explosives

No explosives are to be used at this site.

525 Subsidence

No subsidence will occur in this area, because no underground coal mining will occur beneath the refuse pile site. Therefore, there will be no effects on the site from coal mining related subsidence.

526 Mine Facilities

526.100 Mine Structures and Facilities

No buildings exist or are proposed at the refuse pile site; therefore, no existing buildings will be used in connection with or to facilitate this proposed coal mining and reclamation operation.

526.200 Utility Installation and Support Facilities

No utilities are to be installed at this site.

527 Transportation Facilities

527.100 Road Classification

No permanent roads are to be built in association with the construction of the refuse pile. A temporary road will be used to access the site. The access road to the refuse pile and the temporary road to construct the refuse pile are classified as primary roads. The existing road will be upgraded to provide all weather access to the site. Refer to Section 521.100 of this amendment for additional detail.

527.200 Description of Transportation Facilities

The access road to the refuse pile site follows the alignment of an existing road shown on RA Plate 7-1. The access road is approximately 530 feet long and will have graveled surface 20 feet wide. The access road will have a maximum grade of 16% and an average grade of 10%. The road will gently slope towards UD-1c ~~DD-5~~ which drains to culvert UC-1(See cross-section RA Figure 5-1 ~~2~~). The road does not cross any natural drainage. Culvert, UC-1, ~~will be~~ was installed at the intersection of the access road and the county road, to allow free flow of the runoff in the county road borrow ditch. Specific design information for the culvert is provided in RA Attachment 7-4.

The site road is shown on RA Plate 5 ~~7~~-1. The road is approximately ~~1,500 feet long and will be~~ 20 feet wide and is constructed on compacted subsoil. The road will have an uniform grade of -2% within the site (See cross-section RA Figure 5-2~~3~~). The runoff from the road will flow into drainage ditches and then into the sediment pond.

During operations, the access road and site road will be maintained using a road grader and any other equipment which may be necessary to ensure compliance. Drainage ditches will be maintained to ensure proper functioning. Additional gravel will be selectively placed as required to ensure approximately four to six inches of road base gravel on the access road.

Accidental spillage of coal mine waste during haulage from the mine site to the refuse pile will be minimized by not overloading the haulage trucks. Accidental spills, if they occur, will be cleaned up and transported to the refuse site within 24 hours after the accidental spill occurs.

If a catastrophic events causes damage to either the access or site roads, the rapid repair of the road/roads will begin as soon as practical following the catastrophic damage.

528 Handling and Disposal of Coal, Excess Spoil, and Coal Mine Waste

Coal mine waste and/or underground development waste materials generated at the Dugout Mine, will be transported to the refuse site and disposed of in a controlled manner in accordance with Section 536. Construction of the refuse pile will meet MSHA and DOGM requirements in accordance with the approved plan.

Non-coal and hazardous wastes will not be disposed of in the refuse pile. They will be handled in accordance with the approved M&RP.

529 Management of Mine Openings

No mine openings will be built in the area.

530 OPERATIONAL DESIGN CRITERIA AND PLANS

531 General

This section contains the general plans for the construction of the sediment control measures and general construction and maintenance of the refuse pile area. This site will be used by CFC to handle coal mine waste or underground development waste that may be generated by the Dugout Mine. Also, a portion of the site will be used as a temporary storage yard for mine materials and a place for disposal of excess snow from the Dugout Mine site.

During operations, the runoff from the site area will be treated through the use of sediment controls such as diversion ditches and berms, a sediment pond, and silt fences and/or straw bales. These structures will be constructed, to handle the site runoff, before the initial refuse is placed.

532 Sediment Control

Sediment-control measures for the site area are described in detail in Sections 732 and 742 of this submittal. Runoff-control structures at the refuse pile area have been designed to convey runoff in a non-erosive manner. Sediment yields in the permit area are minimized by, disturbing the smallest practicable area during the construction or modification of surface facilities and contemporaneously reclaiming areas suitable for such reclamation.

533 Impoundments

533.100 Slope Stability

The only impoundment with an embankment that will be constructed, used, or maintained by CFC will be the sedimentation pond at the refuse pile site. This pond ~~will be~~ is an incised pond with an embankment consisting of native materials. A slope-stability analysis was performed on this pond embankment material and is provided in RA Attachment 5-1. According to this analysis, the minimum safety factor for the sedimentation pond embankment is 1.9 under static moist conditions. Furthermore, the analysis presented in RA Attachment 5-1 indicates that a minimum safety factor of 2.2 will exist for the embankment under conditions of rapid drawdown. All analyses were performed assuming that the pond was full to its maximum design depth. These safety factors exceed the minimum requirements of R645-301-533.100.

533.200 Foundation Considerations

Soils investigations have been conducted at the site of the refuse pile area. Results of these investigations are presented in Chapter 2 and RA Attachment 5-1 of this submittal. During these investigations, foundation conditions in the area of the proposed sedimentation pond were evaluated. Based on these investigations, no conditions were encountered which suggested that the materials in which the pond would be constructed would be unstable. The slope-stability analyses presented in RA Attachment 5-1 indicate that the pond embankments will also be stable under operating conditions. Detailed cross sections of the sedimentation pond are presented on

RA Plate 7-2 of this submittal.

533.300 Slope Protection

The inslopes of the sedimentation pond and portions of the outslope disturbed by the spillway construction ~~will be~~ were revegetated following construction to minimize surface erosion and protect the embankments against sudden drawdown. The interim seed mix ~~will be~~ was used for this revegetation effort (see Section 341.200 of this submittal).

Rapid drawdown in the sedimentation pond would be restricted to pumping the vertical distance between the spillway and the pond bottom, a distance of 11 feet (see RA Plate 7-2). Drawdown of this magnitude and rate is not considered significant and, therefore, not a stability or erosion concern. The analysis presented in RA Attachment 5-1 indicates that the slope of the embankment will be stable under conditions of rapid drawdown (minimum safety factor of 2.2). During pumping of the sedimentation pond, flow rates (and drawdown) will be controlled. Hence, it is unlikely that this drawdown will cause surface erosion of the embankment face.

533.400 Embankment Faces

Embankment inslopes and portions of the outslopes ~~will be~~ were revegetated following construction of the sedimentation pond, as outlined in Section 533.300. Riprap will also be placed on the upstream face of the embankment near the emergency spillway structure.

533.500 Highwalls

No highwalls will be located below the discharge lines of the sedimentation pond.

533.600 MSHA Criteria

The sedimentation pond does not meet the size criteria of 30 CFR 216(a).

533.700 Pond Operation and Maintenance Plans

The sedimentation pond has been designed as a total containment pond to contain the 100-year, 24-hour storm event, plus an adequate freeboard. Details of the design and the requirements for operation and maintenance of the pond are presented in Chapter 7 of this submittal.

534 Roads

534.100 Location, Design, Construction, Reconstruction, Use, Maintenance, and Reclamation

No permanent roads will be constructed in the storage area. The refuse will be transported from the mine to the refuse pile area using the existing county road. A temporary access road between the refuse pile area and county road will be constructed to allow equipment access to the pile. The temporary road will be reclaimed. ~~after the refuse pile is built.~~ The temporary road will be maintained in accordance with the approved M&RP. Refer to Section 527.200 for additional description of the transportation facilities.

Control of Damage to Public or Private Property. Roads will be designed in accordance with applicable county and State standards. By designing according to these standards, damage to public or private property will be been minimized.

Road Surfacing. The county road surface, which accesses the mine site, consists of asphalt. The temporary access road surface material will be surfaced with an all weather surface of ~~crushed~~ rock. No acid- or toxic-forming materials will be used in the road surfaces.

534.200 Environmental Protection and Safety

The design and construction of the temporary road will be in accordance with Section 534.200 of the approved M&RP.

534.300 Primary Roads

The access road to the refuse pile will be constructed in accordance with the requirements of Section 534.300 of the M&RP.

535 Spoil

No spoil will be generated in the refuse pile permit area.

536 Coal Mine Waste

Coal mine and underground development waste resulting from mining activities at the Dugout Canyon Mine will be disposed of at the refuse pile.

536.100 Design

The designs and their associated evaluations were based on the results of detailed foundation and laboratory analyses of soils at the site of the refuse pile. These results are presented in RA Attachment 5-2 of this submittal.

Based on the materials encountered in the refuse pile site area, the refuse pile can be constructed to an approximate height of ~~10~~ 60 feet with 2H:1V outslopes on the native alluvial soils and have a static safety factor of ~~1.62~~ 1.59 for failure surfaces starting in the refuse and terminating in the underlying soils. If the weathered Mancos Shale, which is present over the majority of the site, is used in the evaluation, the static safety factor rises to 2.38 ~~3.73~~ for the 60~~10~~-foot height pile configuration. For failure surfaces originating and terminating in the refuse materials, the pile has a static safety factor of 2.27~~7.48~~. Therefore, the proposed pile configuration meets the minimum regulatory requirements. Because the effects of bedrock were not included in the analyses, the results are considered to be conservative.

~~The refuse pile is designed to achieve maximum storage volume, while disturbing the minimum~~

~~amount of area and having a minimum long-term static safety factors of at least 1.62.~~ RA Plate 5-1 presents the proposed configuration of the refuse pile. It will consist of 2H:1V outslopes, with a mesa type crest. The crest shall consist of a gently sloping (~~2~~ 4%), crowned surface to aid in shedding precipitation. ~~Efforts will be made during the construction and life of the waste rock site to minimize south and west facing slopes as much as possible. This may be achieved if less than the maximum design volume of waste rock is encountered at the Dugout Canyon Mine and placed at the site. The maximum slope steepness will not exceed 2H:1V.~~

Storage capacity of the pile is estimated to be approximately ~~73,000~~ 686,055 tons of refuse. ~~This will provide a storage life of 15 years at a waste production rate of 5,000 tons per year.~~ Calculations are presented in RA Attachment 5-3.

536.200 Waste Emplacement

Construction. Prior to the start of refuse pile construction, the appropriate sediment control facilities (sediment pond, undisturbed diversion ditch/berm, and disturbed area diversions) described in Chapter 7 ~~will be~~ were in place. Since initial waste rock storage will occur in an area 4 feet below natural grade, it is anticipated that ditches DD-1 and DD-2 will be constructed to their full extent only after waste reaches a level equal to the currently existing ground surface. An interim berm will be constructed to direct surface runoff away from the storage area below grade and toward ditch DD-3 and the sediment pond. ~~RA Plate 7-1 illustrates the location of the temporary berms.~~ RA Plate 5-1 presents the layout of the ~~proposed~~ refuse pile~~, road, and temporary storage~~ areas.

Vegetative cover will be removed from the refuse site area, prior to placement of any coal mine or underground development waste. Soil materials shall be removed, stockpiled, and properly protected for future use in reclaiming the ~~pile~~ site. As the site has previously been disturbed there is no topsoil present. CFC commits to reasonable mechanized efforts to collect the maximum amount of soil materials still present on the site. It is anticipated that all suitable soil materials down to the Mancos Shale will be stripped. The soil materials salvaged from the strip area will be stored in the soil stockpile. The details of the soil salvage operations and estimates of the volume of soil

to be stripped are presented in Chapter 2.

Once the soils have been stripped from the area, the refuse material will be placed. Based on prior experience, the refuse materials anticipated to be generated by the mine will generally consist of shale with some sandstone, bone coal, and in limited quantities, sandstone from paleochannels.

Sediment pond wastes from either the mine site or refuse area sediment pond will be stored in the refuse pile.

There is a potential for coal processing waste to be stored at the refuse site, should economics justify the washing of coal. Waste stored at the refuse site will be hauled to a wash facility for processing and the waste material not shipped to customers will be returned to the Dugout refuse site for disposal. The waste material returned to the Dugout refuse site will potentially be from any of the Canyon Fuel mines. The returned waste materials will be sampled as described below under the subheading "Testing".

Operation. Refuse materials ~~from the Dugout Canyon Mine~~ will be hauled to the site using either belly dump trailers or end dump trucks. At the refuse site, the trucks will deposit the refuse on a fill bench, where it will be spread and compacted in thin lifts using compaction equipment ~~with a push blade suitable for moving materials and leveling lifts~~. Lifts shall be limited to 2 feet or less in thickness and each successive lift will be allowed to drain (when necessary) before it is capped with the next lift in the construction sequence.

The gradation of the refuse material will most likely be coarse and poorly graded with a small percentage of fine materials. Therefore, it is necessary to rework and level the lifts to assist in achieving the desired densities and prevent the formation of large voids. Additional compaction of each lift can be accomplished by routing the loaded haul trucks over the lift surface in such a manner as to cover the surface uniformly.

Waste rock loads containing non-cemented, soft shale, clay, or fine-grained materials shall be mixed with coarser graded loads in a controlled manner to limit concentrations of fine materials

within the fill. This will be especially true for sediment pond wastes from either the mine site or refuse area sediment pond.

All lifts will be emplaced in a controlled manner to ensure the mass stability of the refuse pile and prevent mass movement during and after construction. Additionally, the lifts shall be graded to promote drainage off the pile surface. No intentional impoundments will be created by the placement of the refuse materials.

Each successive lift shall be benched to allow convenient access to the developing pile. As the limits of the site area are reached laterally, the outer slope shall conform to the ~~3H:1V~~ slope indicated in RA Plate 5-1.

As the ultimate limits, both horizontally and vertically, of the southern end of the refuse area are reached, a portion of the soils stockpiled in the storage area shall be used to cap the southern outslope of the refuse pile. The surface of the pile will be prepared and the soils distributed and revegetated in accordance with the plans presented in Chapter 2 and 3 of this submittal.

Maintenance. Coal mine and underground development waste may have high moisture content. Controlled placement and compaction of the refuse materials will minimize the potential for spontaneous combustion or ignition of these materials. In the unlikely event that any burning waste is found during the regular inspections of the refuse pile area, it will be separated and extinguished either by burying the burning materials or by using water sprays ~~from the mine water truck~~. Once extinguished, the material will be placed, compacted, and buried on the active refuse pile bench.

Testing. Due to the anticipated coarse, open graded nature of the refuse materials, most quality control work for the fill will have to be on a visual basis. Conventional in-place density tests will not give reliable results under these circumstances.

Based on analyses of the materials that have been encountered in the Dugout Canyon Mine and other CFC mines to date, no acid-forming problems are anticipated. When the site is receiving materials, a representative sample will be collected of the material at a rate of one sample per

2,000 cubic yards of material through the year 2005 and one sample per 5,000 cubic yards of material, thereafter. These samples will be analyzed for the parameters listed in Table 6 of the Division's topsoil and overburden guidelines (Leatherwood and Duce, 1988). Analyses reports of the sampled waste rock will be submitted with the annual report.

Should a problem be identified, a mitigation plan will be prepared and submitted to the Division for approval. All identified potential acid or toxic-forming materials will be buried after the material handling plan is approved by the Division.

Copies of the toxicity/acid-base results from the samples collected at the Dugout Canyon Mine are presented in RA Attachment 5-4 and Appendix 5-7 of the approved M&RP. Refer to Section 4.4.5, and Exhibit 4.4.5 of the Skyline Permit and Skyline Mine's Annual Report for toxicity/acid-base results from their samples collected. In Sufco's mine permit refer to data pertaining to toxicity/acid-base results in Sections 5.2.8.3, 5.5.3.3 and Chapter 6.

537 Regraded Slopes

537.100 Division Approval

No mining or reclamation activities will be conducted in the refuse pile permit area that require approval of the Division for alternative specifications or for steep cut slope.

537.200 Regrading of Settled and Revegetated Fills

Upon completion of the filling of the refuse pile, the site will be reclaimed. The refuse fill will be constructed in a prudent manner to ensure that the pile will be stable. Geotechnical analysis of the proposed configuration is presented in RA Attachment 5-2.

Based on the proposed construction plans, the pile will be constructed to achieve the final

configuration. ~~Efforts will be made during construction of the site to minimize the south and west facing slopes of the pile in an effort to enhance the revegetation success of these typically dry slopes. Therefore, it is anticipated that little regrading will need to be conducted.~~ Following completion of the construction, the pile surface will be prepared for soil distribution and revegetation according to plans presented in Chapter 2 and 3 of this submittal.

540 RECLAMATION PLAN

541 General

541.100 Commitment

Upon the permanent cessation of coal mining and reclamation operations at the Dugout Canyon Mine, CFC will close, backfill, or otherwise permanently reclaim all affected areas in accordance with the R645 regulations and this reclamation plan.

541.200 Surface Coal Mining and Reclamation Activities

No surface coal mining and reclamation activities will be conducted in the permit area.

541.300 Underground Coal Mining and Reclamation Activities

No underground activities are planned for this site.

541.400 Environmental Protection Performance Standards Performance Standards

The plan presented herein is designed to meet the requirements of R645-301 and the environmental protection performance standards of the State Program.

542 Narratives, Maps, and Plans

542.100 Reclamation Timetable

A timetable for the completion of each major step in the reclamation plan is presented in RA Figure 5-1. ~~The reclamation of the refuse site is divided into three (3) phases.~~ The first phase consists of regrading the site, placing soil, surface roughening, and seeding (vegetating) the site. This phase will take approximately six (6) months to complete based on the number and anticipated types of construction equipment to be used, the number of operators and laborers necessary to complete the work, and the number of weather days (when work cannot take place) anticipated to occur. Work will be completed sooner if bad weather is not encountered. The second phase will be an approximate 10 month period where the success of the surface reclamation will be evaluated in relation to the surface roughening and the initial seeding success. If the surface roughening and/or initial reseeding (vegetation) does not appear successful, ~~the beginning of third phase may be delayed by~~ additional seeding or reworking of portions of the reclaimed surface may be necessary. ~~The third phase will be the reclamation of the sediment pond, the installation of interim sediment controls, the preparation of the soil disturbed during removal of the sediment pond and revegetation. The third phase will take approximately seven (7) months to complete, and again weather days have been taken into account.~~

542.200 Plan for Backfilling, Soil Stabilization, Compacting, and Grading

Based on the proposed construction plans, the pile will be constructed so that the pile will be at final configuration when the disposal of waste is completed. Therefore, it is anticipated that little regrading will need to be conducted. The construction plans for the refuse pile area were designed to meet the objectives of maximizing refuse storage quantities and maintaining a geotechnically stable base. The primary features of this plan are:

Constructing a 2H to 1V outslope for the refuse pile;

Placement of soil;

Revegetation and mulching of the soiled site; and

Breaching and filling of the sedimentation pond with embankment materials ~~and implementation of interim sediment-control measures~~.

Following completion of the construction, the pile surface will be prepared for soil distribution from the soils in the stage storage area. The quantity of soil cover required for the refuse pile facility is discussed in Section 242 of this amendment.

Grading activities during operations will develop a pile with a final surface configuration approximating that defined by RA Plate~~s~~ 5-1 ~~and 5-2.~~ Once this final surface is achieved, the top two feet of the surface ~~of the area will~~ not be compacted or the surface will be ripped to prepare it for soil spreading. Details regarding soil placement and revegetation following regrading are provided in Chapters 2 and 3, respectively.

Sedimentation Pond Removal and Interim Sediment Control. The sedimentation pond will be retained for as long as practical during reclamation. ~~The sediment pond will remain in-place until the general site area has been reclaimed and revegetated and DOGM gives authorization for its removal. The timetable for removal of this pond is indicted in RA Figure 5-1.~~ Because the pond is constructed as an incised structure, the pond reclamation will consist primarily of breaching the pond and pushing the embankment into the pond to create a gentle slope. The emergency spillway ~~and energy dissipation~~ outlet channel will be removed and the rock from the spillway will be used in the construction of reclaimed channel~~s~~ RD-1c ~~and RD-2. Runoff from the pond area will be treated through silt fences and/or straw bale dikes. These will be constructed in accordance with designs presented in Chapter 5 Section 542.200 of the M&RP.~~

During reclamation the berm materials of the diversion ditches around the refuse pile will be pushed into the ditch and a free draining slope will be constructed to allow runoff from the pile site to enter the natural drainages. Once the sediment pond and ditch areas are adequately graded, the soil materials will be redistributed and revegetated in accordance with Chapters 2 and 3.

542.300 Final Surface Configuration Maps and Cross Sections

Final surface configuration maps and cross sections for the Dugout Canyon site are provided on RA Plate~~s~~ 5-2. ~~and 5-4.~~ The topography illustrated on RA Plate 5-2 shows the proposed pile configuration and the proposed final configuration of the ground surface. RA Plate 5-2 presents final pile conditions and final configuration cross-sections of the refuse pile site.

542.400 Removal of Temporary Structures

No surface structures are planned to be associated with the refuse pile operation.

542.500 Removal of Sedimentation Pond

Refer to Section 542.200 of this amendment.

542.600 Roads

All temporary access roads constructed during refuse pile construction activities will be reclaimed when no longer needed for access to the site. Any surfacing material will be removed, the area will be regraded, ripped, and the final reclamation seed mix will be applied as specified in Chapter 3.

542.700 Final Abandonment of Mine Openings and Disposal Areas

No mine openings or disposal areas will exist in this area.

542.800 Estimated Cost of Reclamation

Refer to the existing M&RP. It is anticipated that the cost of reclamation of the refuse pile is adequately covered within the existing Dugout Canyon Mine reclamation bond.

550 RECLAMATION DESIGN CRITERIA AND PLANS

551 Casing and Sealing of Underground Openings

No underground openings will exist in the area.

552 Permanent Features

552.100 Small Depressions

No small depressions will be created as part of the refuse pile construction and reclamation. Additionally, the original topographic divide that existed on the site pre-disturbance will be enhanced as part of the refuse pile construction plan.

552.200 Permanent Impoundments

No permanent impoundments will be left following reclamation.

553 Backfilling and Grading

553.100 Disturbed Area Backfilling and Grading

Approximate Original Contour. As indicated earlier, the site of the refuse pile is a previously disturbed site. Therefore, CFC request a variance to the approximate original contour requirements. The proposed configuration of the site will comply with the post-mining land use and the proposed reclamation of the pile will be better than the un-reclaimed site.

Based on the proposed plan, a portion of the existing ground surface will be raised by the construction of the refuse pile. Prior to placing refuse, the soils present on the site will be stripped and temporarily stored on site. At final reclamation, the stored soil will be redistributed and revegetated as described in Chapters 2 and 3 of this submittal.

Erosion and Water Pollution. Sediment-control measures will be implemented during and following reclamation activities. ~~The sediment pond and diversion ditches will remain in place until the general site area has been revegetated.~~

Prior to seeding, all areas with a slope steepness of 3H:1V or steeper will be roughened using a trackhoe. The final surface will consist of mounds and depressions capable of holding runoff. Refer to Sections 355 and 341 regarding erosion-control and revegetation.

~~Once adequate vegetative cover is established, the diversion ditches shall be filled in by pushing the downstream berm into the ditch to create a free draining surface. Likewise, the sediment pond will be reclaimed by breaching the pond embankment and pushing the embankment materials back into the sediment pond area to create a gentle slope.~~

During these activities temporary sediment controls will consist of installation of silt fences, berms, and/or straw bales, surface roughening, and re-establishment of the vegetative cover for the limited areas. As vegetation becomes established on the reclaimed surfaces, erosion potentials will be further minimized. By minimizing erosion, water pollution will also be precluded.

Post-Mining Land Use. The disturbed area will be reclaimed in a manner that supports the approved post-mining land use.

553.200 Spoil and Waste

Spoil. No spoil will be generated within the permit area.

Coal Processing Waste. No coal processing waste will be generated within the permit area. However, should coal from the CFC mines be processed at a washing facility, there is potential for the processing waste to be returned to the refuse pile site for disposal.

553.250 Refuse Piles

The refuse pile site is a previously disturbed area. The site is to be located in a played out gravel

pit. Therefore, little soil materials remain available on the site. ~~Based on the estimates presented in Chapter 2, there are sufficient soil materials within the footprint of the proposed facility to cover the pile (see RA Attachment 5-3).~~ The refuse pile surface will be prepared and the soil will be distributed and revegetated in accordance with the plans proposed in Chapters 2 and 3.

553.300 Exposed Coal Seams, Acid- and Toxic-Forming Materials, and Combustible Materials

No coal seams are present in the area.

553.400 Cut-and-Fill Terraces

No cut-and-fill terraces will be built at the site.

553.500 Highwalls From Previously Mined Areas

No highwalls exist or will be built at the refuse pile site.

553.600 Previously Mined Areas

The area has not been previously mined.

553.700 Backfilling and Grading - Thin Overburden

Backfilling and grading will occur during reclamation, as described in Sections 534.100 and 542.600.

553.800 Backfilling and Grading - Thick Overburden

Backfilling and grading will occur during reclamation, as described in Sections 534.100 and 542.600.

553.900 Regrading of Settled and Revegetated Fills

No settled or revegetated fills currently or will exist at the storage site.

560 PERFORMANCE STANDARDS

Coal mining and reclamation operations at the Dugout Canyon Mine will be conducted in accordance with the approved permit and the requirements of R645-301-510 through R645-301-553.

RA ATTACHMENT 5-2

REFUSE PILE SLOPE STABILITY EVALUATION

EarthFax

EarthFax
Engineering Inc
Engineers/Scientists
7324 So. Union Park Ave.
Suite 100
Midvale, Utah 84047
Telephone 801-561-1555
Fax 801-561-1861

November 10, 1999

Mr. Chris Hansen
Canyon Fuel Company, LLC
Dugout Canyon Mine
HC35 Box 380
Helper, Utah 84526

Subject: Results of a foundation investigation for the proposed waste-rock pile at the Dugout Canyon Mine

Dear Chris:

The purpose of this letter is to present the results of a foundation investigation for the proposed waste-rock pile at the Dugout Canyon Mine near Wellington, Utah. The proposed waste-rock pile is located about 4.5 miles southwest of the mine. The project was conducted in general accordance with the proposal from EarthFax dated September 8, 1999 except as noted below:

1. Only local areas with small quantities of weathered Mancos Shale were encountered. Therefore, only 2 series of laboratory tests (Atterberg Limits, gradation, hydrometer, and direct shear) were conducted on weathered Mancos Shale samples, rather than the three that were proposed.

2. Gradation and direct shear tests were conducted on samples of granular alluvium and silty sand from the site to provide soil strength parameters for all of the native soils.

3. Nine test pits were installed to investigate the different soil types, rather than the proposed six test pits.

4. One additional test pit was excavated near the proposed location of a sedimentation pond embankment for the waste-rock pile. Gradation and direct shear tests were conducted on a sample from this test pit. The data are presented in this report, but slope stability analyses were not conducted for the sedimentation pond embankment.

SOILS INFORMATION

The site was originally investigated by RB&G Engineering, Inc. (1998; Provo, Utah) as a potential borrow source for granular fill used at the Dugout Canyon Mine. The results of that investigation indicated that the soils consisted of interbedded layers of gravel and clay overlying Mancos Shale. Following removal and stockpiling of the topsoil, the soils were excavated, crushed, screened, and transported to the Dugout Canyon Mine. The excavation

typically continued until Mancos Shale was encountered. As a result, the remaining soil consisted primarily of remnants of granular alluvium and weathered Manco Shale.

Nine shallow test pits identified as DCW-1 through DCW-9 were excavated using a rubber tire backhoe within the footprint of the proposed waste-rock pile. One test pit was excavated near the proposed location of a sedimentation pond embankment for the waste-rock pile. The locations of the test pits are presented in Figure 1 (attached). The test pits were logged by a geotechnical engineer from EarthFax and by a soil scientist from EIS, Inc. (Salt Lake City, Utah). EarthFax's test pit logs are attached. Nuclear density/moisture tests were conducted on the surface soils at most of the test pits to provide remolding criteria for samples submitted for direct shear tests. Select samples were submitted to Applied Geotechnical Engineering Consultants, Inc. (Sandy, Utah) for geotechnical laboratory analyses.

According to the test pit logs, a thin layer (2 to 2.2 feet thick) of weathered Mancos Shale over Mancos Shale bedrock was encountered at Test Pits DCW-3 and DCW-9. Remnants (2.7 to 9 feet thick) of gravelly sand alluvium were encountered at Test Pits DCW-1, DCW-2, DCW-4, DCW-5. Mancos Shale was encountered below the alluvial soil at Test Pits DCW-1 and DCW-4. Test Pit DCW-6 contained layers of silty sand and sandy silt to a depth of 6 feet overlying alluvium to a depth of 7.5 feet. At Test Pit DCW-7, some coal, sandstone gravel, and soil extended to a depth of 0.7 feet, silty sand alluvium extended to a depth of 6 feet, and gravelly sand alluvium extended to a depth of about 7 feet. Stockpiled topsoil was encountered to a depth of 5 feet at Test Pit DCW-8, under which a gravelly sand alluvium extended to a depth of 6.5 feet. At the location of the proposed sedimentation pond embankment (Test Pit DCW-10), the subsurface soils consisted of a silty sand topsoil to a depth of 1.1 feet over a gravelly sand layer to a depth of 8.5 feet.

Results of the laboratory analyses are attached and are summarized in Table 1. Direct shear tests were conducted on samples that were remolded to the same dry density and moisture contents that were recorded in the field from the nuclear density/moisture tests. From Table 1:

- **Weathered Mancos Shale (Test Pits DCW-3 and DCW-9):** The material contained 0 to 49% gravel, 15 to 16% sand, 25 to 61% silt, and 10 to 24% clay. According to the Atterberg Limits data, the liquid limit was 26 to 33, the plastic limit was 17 to 18, and the plastic index was 9 to 15. The angle of internal friction ranged between 33 and 37 degrees, and the cohesion intercept values ranged between 1320 and 1360 pounds per square foot ("psf"). The direct shear tests were conducted under consolidated, undrained, unsaturated (moist) conditions.

- **Gravelly Sand Alluvium (Test Pit DCW-1):** The material contained 52% gravel, 30% sand, and 18% silt. The angle of internal friction was 43 degrees and the

soil was noncohesive from direct shear tests conducted under consolidated, undrained, unsaturated (moist) conditions.

- **Sandy Silt (Test Pit DCW-6):** The material contained 59% silt and 41% sand. The angle of internal friction was 45 degrees. and the soil was noncohesive from direct shear tests conducted under consolidated, undrained, unsaturated (moist) conditions.

- **Sedimentation Pond Embankment Subgrade (Test Pit DCW-10):** The material contained 34% gravel, 34% sand, and 32% silt. The angle of internal friction was 43 degrees and the cohesion intercept value was 210 psf from direct shear tests conducted under consolidated, undrained, unsaturated (moist) conditions.

WASTE-ROCK

The waste-rock to be placed at the site will originate as roof-fall and other rock materials being cleaned from the Dugout Canyon Mine. Similar waste-rock had been tested for a slope stability analysis of a temporary waste-rock pile at the Dugout Canyon Mine. The results of this analysis were presented in a letter dated July 27, 1998 from EarthFax Engineering to Canyon Fuel Company. As part of that investigation, gradation, Atterberg Limits, Standard Proctor compaction, and direct shear tests were conducted on the waste-rock. Results of these analyses are attached (data sheets dated July 15, 1998). According to these analyses, the waste-rock is coarse-grained, with about 95% retained on the No. 200 sieve (i.e., sand fraction or larger), and about 82% retained on the No. 4 sieve (i.e., gravel fraction). The material has further been classified as poorly-graded, with a Unified Soil Classification of GP-GM. The sample had an angle of internal friction of 35 degrees and a cohesion strength of 490 pounds per square foot. These strength parameters will be used for the slope stability analysis of the proposed waste-rock pile.

ASSUMPTIONS

The following assumptions were made for the slope stability analyses:

1. The waste-rock will be placed to a maximum thickness of 60 feet with a maximum outslope of 2 horizontal to 1 vertical (27 degrees).

2. As a worst-case condition, the native soil is vertically continuous and the failure surfaces do not intersect the Mancos Shale bedrock. This assumption was included because the Mancos Shale bedrock surface is variable.

3. The soil property parameters used for the analyses are representative of the native soils throughout the site. In the interest of conservatism, the weakest

soils from the direct shear tests were used for the analyses, which were as follows (see Table 1):

	Granular Soil	Weathered Mancos Shale
Angle of Internal Friction (degrees)	43	33
Cohesive Strength (psf)	0	1360

4. The soils do not become saturated, and there is no phreatic surface. The soils drain rapidly, and excess pore pressures do not develop in response to strains and stress changes.

5. The results of direct shear tests on the waste-rock presented in the letter dated July 27, 1998 from EarthFax Engineering to Canyon Fuel Company are representative of the proposed waste-rock pile. Therefore, the angle of internal friction is 35 degrees and the cohesive strength is 490 pounds per square foot.

RESULTS

Slope stability analyses were performed using the computer program GEOSLOPE (Version 5.0). GEOSLOPE utilizes the limit equilibrium procedure of slices (Simplified Bishop's method) to determine the safety factor of potential failure surfaces for circular shapes.

Prior to conducting the analyses, the topography of the native slope in Figure 1 was studied to determine the most critical slopes. The steepest native slopes occur along the southern end of the west edge of the property, where sections of the slope are about 30 to 40 degrees, although the slope lengths are relatively short. The longest native slopes occur along the eastern edge of the property, but the slope angles in this area are only 15 to 20 degrees. Intermediate slope angles and lengths are present in the vicinity of Test Pit DCW-10. Sections from all three of these areas were analyzed, and the results indicated that the most critical slopes occurred along the southern end of the west edge of the property. Therefore, the analysis cross-section for this project is presented as Section A-A' in Figure 1.

Using the assumptions presented above, results of the slope stability analyses are attached and are summarized in Table 2 (attached). The results of the stability analyses include the data files, the output files, and the cross-sections that show the trial failure surfaces and the ten critical failure surfaces. Table 2 includes a description of the analysis slope, the number of trial failure surfaces, and the safety factor against sliding. From Table 2, the critical safety factor was 1.59 for failure surfaces originating at the toe of the native slope (alluvial soil) and terminating in the waste-rock pile. When soil strength parameters for

weathered Mancos Shale were used for the native soils, the safety factor increased to 2.38. The critical safety factor was 2.27 for failure surfaces originating and terminating in the waste-rock pile. These values satisfy the minimum regulatory requirement of 1.5 promulgated by the Utah Division of Oil, Gas, and Mining (R645-301-536.110). Because the effects of bedrock were not included in the analyses, the results are considered to be conservative.

We have appreciated the opportunity to provide this information. If you have any questions, please call.

Sincerely,

Rhett Brooks

Rhett Brooks, P.E.
EarthFax Engineering, Inc.

cc: Richard White, EarthFax
Tom Suchoski, EarthFax

REGISTERED PROFESSIONAL ENGINEER
92-187704-2202
RHETT K. BROOKS
STATE OF UTAH

Rhett Brooks

Nov. 10, 1999

REFERENCES

RB&G Engineering, Inc. 1998. Canyon Fuel Company, Dugout Canyon Surface Coal Handling Facilities near Wellington, Utah. Project report dated June 1998 prepared for Canyon Fuel Company. Provo, Utah.

Utah Division of Oil, Gas, and Mining. 1996. Utah Coal Mining Regulations. Salt Lake City, Utah.

TABLE 1

SUMMARY OF LABORATORY TEST RESULTS

Test Pit and Depth (Ft.)	Gradation (%)				Atterberg Limits			Direct Shear Test Values	
	Gravel	Sand	Silt	Clay	Liquid Limit	Plastic Index	Plastic Limit	Cohesive Strength (psf)	Angle of Internal Friction (degrees)
DCW-1 0-3.2[a]	52	30	18		--	--	--	0	43
DCW-3 0-2.2[b]	49	16	25	10	33	15	18	1320	37
DCW-6 2.5-6[c]	0	41	59		--	--	--	0	45
DCW-9 0-1.2[d]	0	15	61	24	26	9	17	1360	33
DCW-10 1.1-8.5[e]	34	34	32		--	--	--	210	43

(a) Alluvium. Sample for direct shear test remolded to a dry density of 115 pcf at a moisture content of 6%, which were the results of a nuclear density/moisture test conducted on the ground surface near the test pit. Direct shear test conducted under consolidated-undrained (CU) unsaturated conditions with vertical effective pressures of 1200, 3600, and 6000 psf.

(b) Weathered Mancos Shale. Direct shear test samples remolded to a dry density of 113 pcf at a moisture content of 6%, which were the results of a nuclear tests conducted on the ground surface near the test pit. Direct shear test conducted under consolidated-undrained (CU) unsaturated conditions with vertical effective pressures of 1200, 3600, and 6000 psf.

(c) Silty sand. Sample for direct shear test remolded to a dry density of 112 pcf at a moisture content of 9%, which were the results of a nuclear density/moisture test conducted on the ground surface near the test pit. Direct shear test conducted under consolidated-undrained (CU) unsaturated conditions with vertical effective pressures of 1200, 3600, and 6000 psf.

(d) Weathered Mancos Shale. Direct shear test samples remolded to a dry density of 98 pcf at a moisture content of 6%, which were the results of a nuclear test conducted on the ground surface near the test pit. Direct shear test conducted under consolidated-undrained (CU) unsaturated conditions with vertical effective pressures of 1200, 3600, and 6000 psf.

(e) Silty Sand at proposed location of a sedimentation pond embankment. Direct shear test samples remolded to a dry density of 100 pcf at a moisture content of 8%, which were the results of a nuclear test conducted on the ground surface near the test pit. Direct shear test conducted under consolidated-undrained (CU) unsaturated conditions with vertical effective pressures of 500, 1500, and 2500 psf.

TABLE 2

RESULTS OF SLOPE STABILITY ANALYSES

Slope	Number of Trial Failure Surfaces	Safety Factor
Native Soil (Alluvium) and Waste-Rock Pile	6200	1.59
Native Soil (Mancos Shale) and Waste-Rock Pile	6200	2.38
Waste-Rock Pile	6000	2.27

G:\UC698\11\DWG\FIG-1TP.DWG 10-28-99

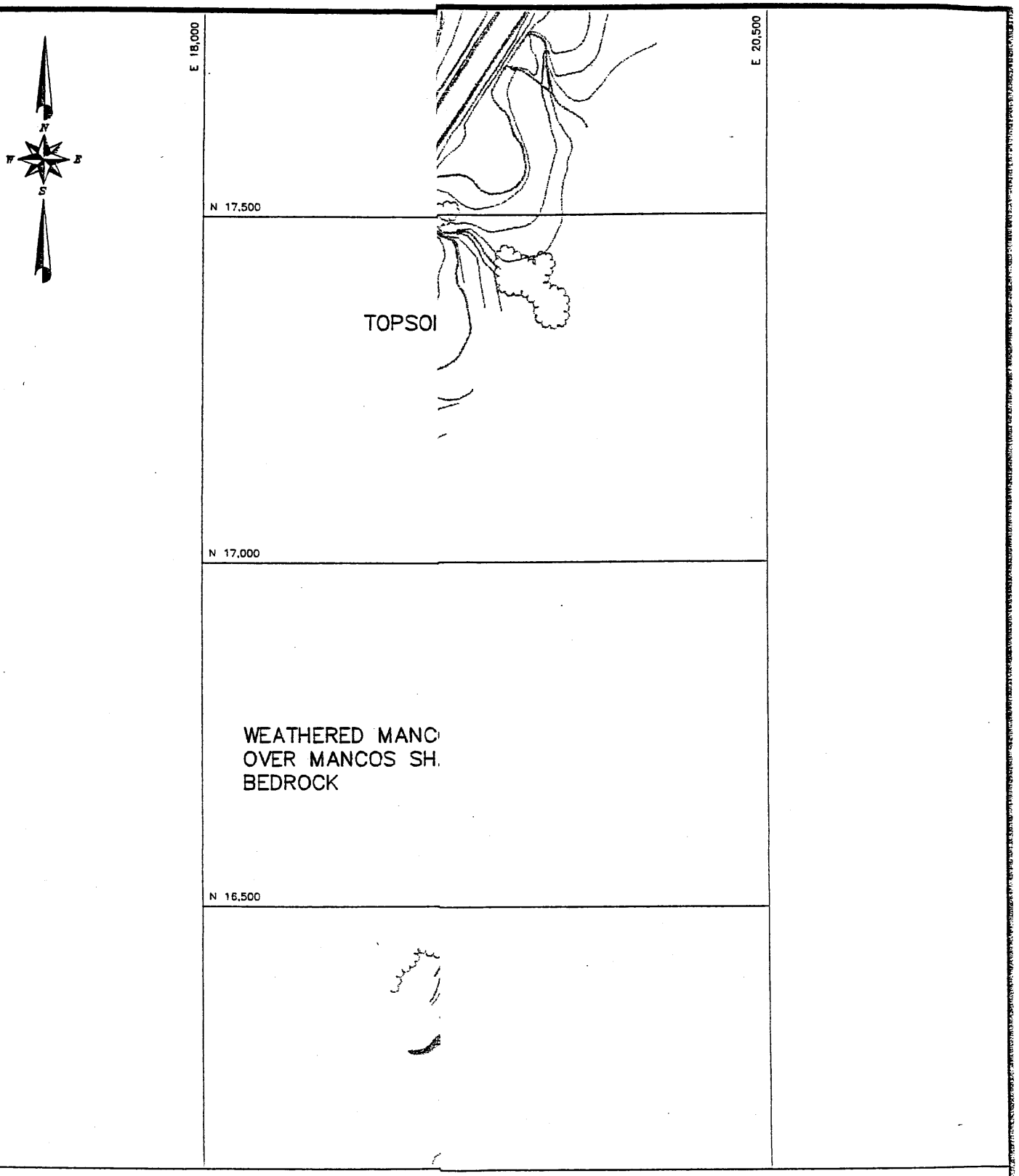

LEGEND

DCW-1

● TEST PIT LOCATION

EarthFax

TEST PIT DCW-1
(Excavated and logged on September 16, 1999)

Depth (ft.)	Description
0 - 3.2	Sandy Gravel w/ Silt and Cobbles. Alluvium. About 42% gravel, 30% sand, 10% cobbles, and 18% silt. Sand is typically fine to coarse grained. Cobbles are up to 7 inches in diameter, subround. Gravel is subround to subangular. Moist. No cementation or cohesion. Good foundation material or fill material. From a 12-inch nuclear density/moisture test: moisture content = 5.7%, dry density = 115.5 pounds per cubic foot, wet density = 122.1 pounds per cubic foot. Brown 10YR 4/3. GM.
3.2 - 4.6	Mancos Shale Bedrock. Fractured. Gray. Hard to dig.

TEST PIT DCW-2
(Excavated and logged on September 16, 1999)

Depth (ft.)	Description
0 - 7.7	Gravelly Sand w/ Silt, Cobbles, and Boulders. Alluvium. About 45% sand, 25% gravel, 15% cobbles/boulders, and 15% silt. Sand is typically fine to coarse grained. Gravel is subround to subangular. Moist. No cementation or cohesion. Good foundation material or fill material. From a 8-inch nuclear density/moisture test: moisture content = 7.8%, dry density = 115.0 pounds per cubic foot, wet density = 124.0 pounds per cubic foot. Brown 10YR 4/3. Boulders at bottom impeded digging deeper. SM.

TEST PIT DCW-3
(Excavated and logged on September 16, 1999)

Depth (ft.)	Description
0 - 2.2	Weathered Mancos Shale. 49% gravel (fractured Mancos Shale), 16% sand, 25% silt, and 10% clay. Loose in top 3 inches, firmer and less weathered with depth. From a 12-inch nuclear density/moisture test: moisture content = 5.6%, dry density = 112.6 pounds per cubic foot, wet density = 118.8 pounds per cubic foot.
2.2 - 3.2	Mancos Shale Bedrock. Fractured and slightly weathered. Gray. Hard to dig.

TEST PIT DCW-4
(Excavated and logged on September 16, 1999)

Depth (ft.)	Description
0 - 2.7	Gravelly Sand w/ Silt. Alluvium. About 55% sand, 20% gravel, 10% cobbles, and 15% silt. Sand is typically fine to coarse grained. Cobbles are up to 7 inches in diameter, subround. Gravel is subround to subangular. Moist. No cementation or cohesion. Good foundation material or fill material. From a 12-inch nuclear density/moisture test: moisture content = 5.7%, dry density = 115.5 pounds per cubic foot, wet density = 122.1 pounds per cubic foot. Brown 10YR 4/3. SM.
2.7 - 3.2	Mancos Shale Bedrock. Fractured. Gray. Hard to dig.

TEST PIT DCW-5
(Excavated and logged on September 16, 1999)

Depth (ft.)	Description
0 - 9	Gravelly Sand w/ Silt. Alluvium. About 55% sand, 20% gravel, 10% cobbles, and 15% silt. Sand is typically fine to coarse grained. Cobbles are up to 7 inches in diameter, subround. Gravel is subround to subangular. Moist. No cementation or cohesion. Good foundation material or fill material. From a 12-inch nuclear density/moisture test: moisture content = 5.7%, dry density = 115.5 pounds per cubic foot, wet density = 122.1 pounds per cubic foot. Brown 10YR 4/3. SM.

TEST PIT DCW-6
(Excavated and logged on September 16, 1999)

Depth (ft.)	Description
0 - 1.5	Silty Sand. About 60% sand and 40% silt. Sand is very fine to fine grained. Nonplastic. Numerous large roots from pine trees. From a 12-inch nuclear density/moisture test: moisture content = 8.8%, dry density = 102.9 pounds per cubic foot, wet density = 111.9 pounds per cubic foot. Yellowish brown 10YR 5/4. SM.
1.5 - 2.5	Sandy Silt. About 65% silt and 35% silt. Sand is very fine grained. Low plasticity, somewhat cohesive. Dry and hard. Very friable. ML.
2.5 - 6	Sandy Silt. About 59% silt and 41% sand. Sand is very fine grained. Nonplastic. Probably a blow sand layer. Light yellowish brown 2.5Y 6/3. ML.
6 - 7.5	Gravelly Sand w/ Silt. Alluvium. About 55% sand, 20% gravel, 10% cobbles/boulders, and 15% silt. Sand is typically fine to coarse grained. Gravel is subround to subangular. Moist. No cementation or cohesion. Brown 10YR 4/3. SM.

TEST PIT DCW-7
(Excavated and logged on September 16, 1999)

Depth (ft.)	Description
0 - 0.7	Mix of Rubbish. Mix of coal, sandstone, and dark brown soil (silt through cobbles). SM.
0.7 - 6	Silty Sand w/ Gravel. Alluvium. About 70% sand, 10% gravel/cobbles, 20% silt. Sand is typically fine to coarse grained. Gravel is subround to subangular. Moist. No cementation or cohesion. Brown 10YR 4/3. SM.
6 - 7	Gravelly Sand w/ Silt. Alluvium. About 55% sand, 20% gravel, 10% cobbles, and 15% silt. Sand is typically fine to coarse grained. Gravel is subround to subangular. Moist. No cementation or cohesion. Brown 10YR 4/3. SM.

TEST PIT DCW-8
Topsoil Stockpile
(Excavated and logged on September 16, 1999)

Depth (ft.)	Description
0 - 5	Topsoil Stockpile. Topsoil that had been stripped from the site and piled in this area. Primarily silty sand with gravel and organic matter.
5 - 6.5	Gravelly Sand w/ Silt. Alluvium. About 55% sand, 20% gravel, 10% cobbles, and 15% silt. Sand is typically fine to coarse grained. Gravel is subround to subangular. Moist. No cementation or cohesion. Brown 10YR 4/3. SM.

TEST PIT DCW-9
(Excavated and logged on September 16, 1999)

Depth (ft.)	Description
0 - 2	Weathered Mancos Shale. 61% silt, 24% clay, and 15% sand. Loose in top 14 inches, firmer and less weathered with depth. From a 12-inch nuclear density/moisture test: moisture content = 5.7%, dry density = 98.3 pounds per cubic foot, wet density = 103.8 pounds per cubic foot. CL.
2 - 2.5	Mancos Shale Bedrock. Fractured and slightly weathered. Gray. Hard to dig.

TEST PIT DCW-10
Near Proposed Sedimentation Pond Embankment
(Excavated and logged on September 16, 1999)

Depth (ft.)	Description
0 - 1.1	Silty Sand Topsoil. About 75% sand and 25% silt. Sand is very fine to fine grained. Nonplastic. Numerous fine roots. From a 12-inch nuclear density/moisture test: moisture content = 8.2%, dry density = 95.9 pounds per cubic foot, wet density = 103.7 pounds per cubic foot. Brown 10YR 4/3. SM.
1.1 - 8.5	Gravelly Sand w/ Silt. Alluvium. About 34% sand, 34% gravel/cobbles, and 32% silt. Sand is typically fine to coarse grained. Gravel is subround to subangular. Moist. No cementation or cohesion. Brown 10YR 4/3. SM.

Applied Geotechnical Engineering Consultants, Inc.

July 15, 1998

TESTS CONDUCTED FOR SLOPE STABILITY ANALYSES OF A TEMPORARY WASTE-ROCK PILE AT THE DUGOUT CANYON MINE. RESULTS PRESENTED IN A LETTER DATED JULY 27, 1998, FROM EARTHFAX ENGINEERING TO CANYON FUEL COMPANY. RKB

Earthfax Engineering
7324 South 1300 East, Suite 100
Midvale, UT 84047

Attention: Richard B. White

Subject: Soils Laboratory Testing
AGEC Project No. 973301

Gentlemen:

Applied Geotechnical Engineering Consultants, Inc. was requested to provide laboratory testing on a sample received July 2, 1998. The following tests have been performed in general accordance with the test method listed.

Test	Test Method
Particle Size Analysis	ASTM D-422
Atterberg Limits	ASTM D-4318
Direct Shear	ASTM D-3080
Standard Proctor	ASTM D-698

The results of the laboratory testing are shown graphically in Figures 1-2. The direct shear test specimens were remolded to approximately 90% of the standard proctor maximum dry density near optimum moisture content. Only material passing the #4 sieve was used in direct shear testing.

If you have any questions, or if we can be of further service, please call.

Sincerely,

APPLIED GEOTECHNICAL ENGINEERING CONSULTANTS, INC.

Stephanie Francom

Stephanie Francom
Rev. SDA, E.I.T.

600 West Sandy Parkway • Sandy, Utah 84070 • (801) 566-6399 • FAX (801) 566-6493

Applied Geotechnical Engineering Consultants, Inc.

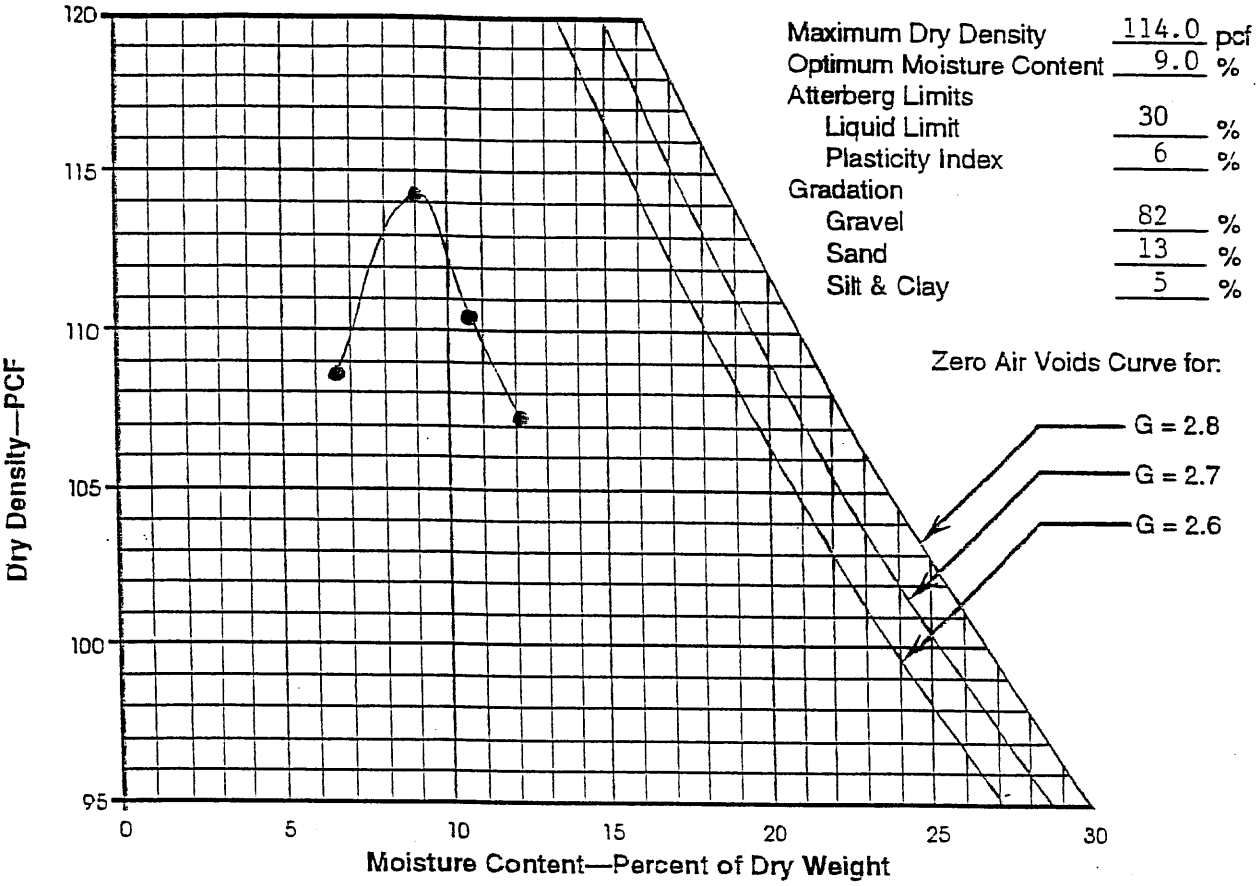

Maximum Dry Density	114.0	pcf
Optimum Moisture Content	9.0	%
Atterberg Limits		
Liquid Limit	30	%
Plasticity Index	6	%
Gradation		
Gravel	82	%
Sand	13	%
Silt & Clay	5	%

Compaction Test Procedure ASTM D-698 Method D

Sample of: Poorly-Graded Gravel with Silt (GP-GM) From: DCM-1 (7/6/98)

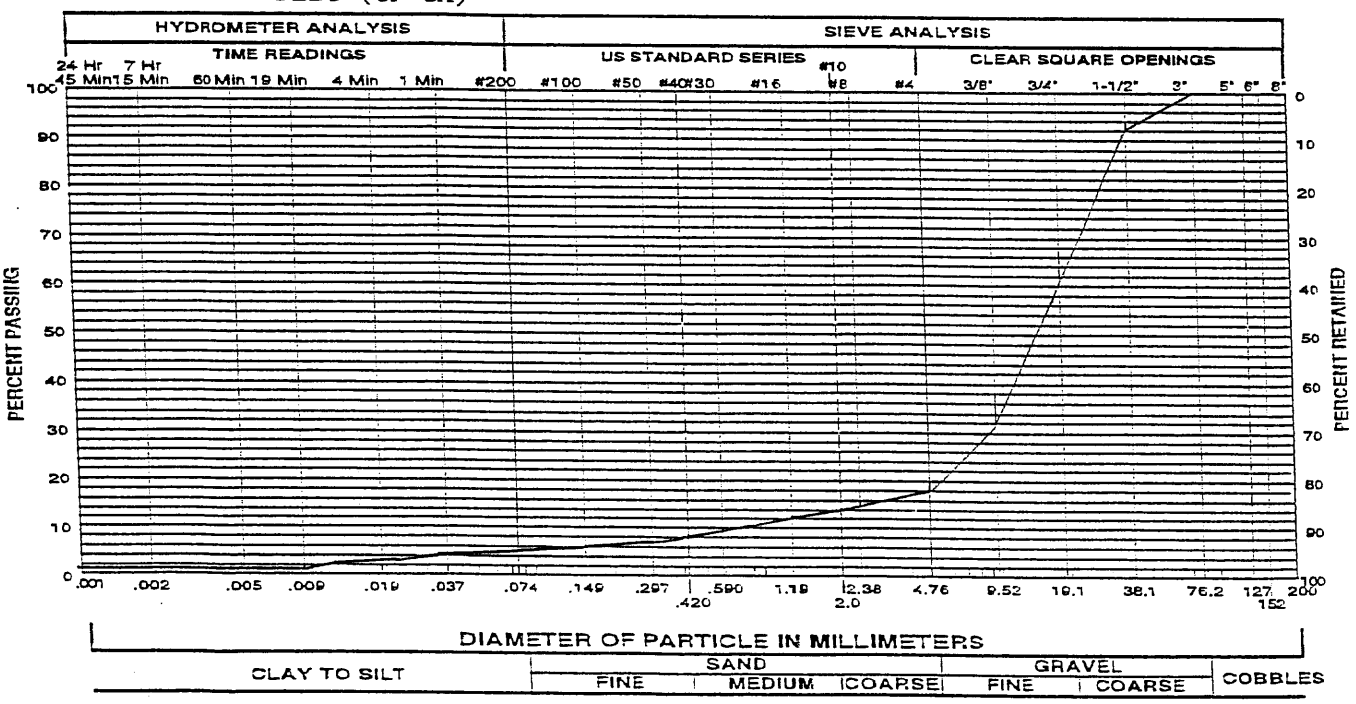

Project No. 973301

GRADATION & COMPACTION TEST RESULTS

Figure 1

Applied Geotechnical Engineering Consultants, Inc.

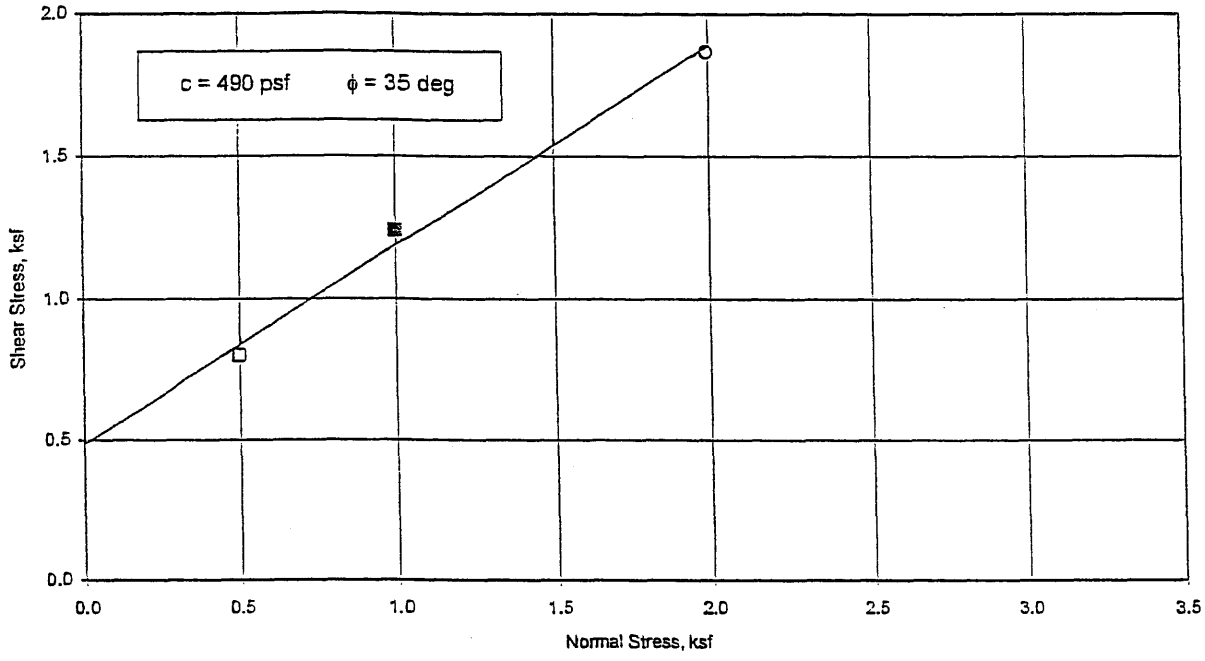

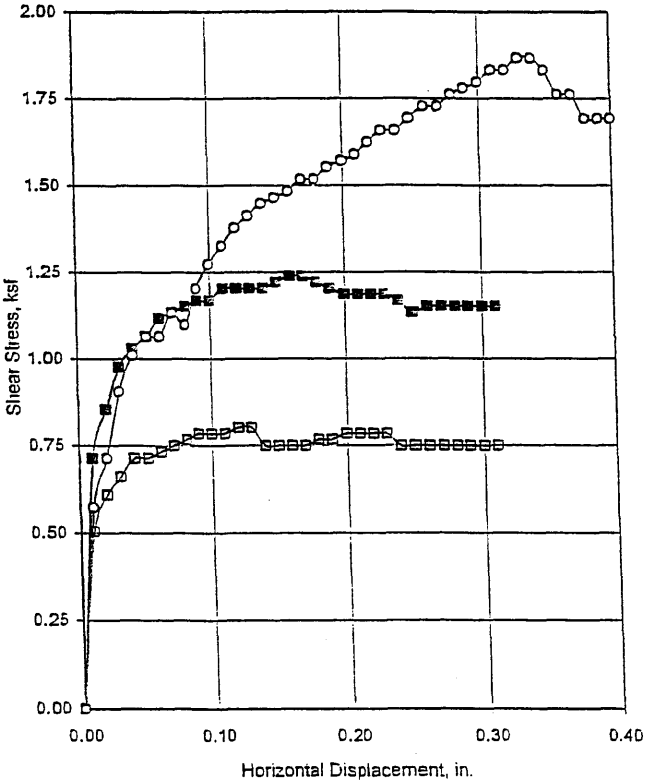

Test No. (Symbol)	1(□)	2(■)	3(O)
Sample Type	Remolded		
Length, in.	0.75	0.75	0.75
Diameter, in.	1.93	1.93	1.93
Dry Density, pcf	112	112	112
Moisture Content, %	9	9	9
Consolidation Load, ksf	0.5	1.0	2.0
Normal Load, ksf	0.5	1.0	2.0
Shear Stress, ksf	0.80	1.24	1.87
Remarks	Strain Rate 0.05 in/min.		
	Only soil passing the #4 sieve was used		
	in test.		

Sample Index Properties	
Dry Density, pcf	N/A
Moisture Content, %	N/A
Liquid Limit, %	30
Plasticity Index, %	6
Percent Gravel	82
Percent Sand	13
Percent Passing No. 200 Sieve	5

Type of Test: Consolidated Undrained/Saturated

Sample Description: Poorly Graded Gravel with Silt (GP-GM) From: DCM-1

Project No. 973301

DIRECT SHEAR TEST RESULTS

Figure 2

Applied Geotechnical Engineering Consultants, Inc.

October 19, 1999

Earthfax Engineering
7324 South 1300 East, Suite 100
Midvale, UT 84047

Attention: Rhett Brooks

Subject: Soil Testing for Waste Rock Pile Foundation Investigation
Dugout Canyon, Utah
AGEC Project No. 1990648

Gentlemen:

Applied Geotechnical Engineering Consultants, Inc. was requested to provide laboratory testing on five bucket samples delivered to our laboratory September 17, 1999. The following tests were performed in general accordance with the test methods listed.

Test	Test Method
Particle Size Analysis	ASTM D 422
Atterberg Limits	ASTM D 4318
Direct Shear	ASTM D 3080

The results of the laboratory testing are summarized in Table I and shown graphically in Figures 1 through 8.

If you have any questions, or if we can be of further service, please call.

Sincerely,

APPLIED GEOTECHNICAL ENGINEERING CONSULTANTS, INC.

Stephanie Merkley

Stephanie Merkley

Reviewed by SDA, E.I.T.

600 West Sandy Parkway • Sandy, Utah 84070 • (801) 566-6399 • FAX (801) 566-6493

APPLIED GEOTECHNICAL ENGINEERING CONSULTANTS, INC.

Table I. Summary of Laboratory Results

Sample Location	Gradation			Atterberg Limits		Sample Classification
	Gravel (%)	Sand (%)	Silt/ Clay (%)	Liquid Limit (%)	Plasticity Index (%)	
DCW-1 @ 0"-38"	52	30	18			Silty Gravel with Sand (GM)
DCW-3 @ 0"-26"	49	16	35	33	15	Clayey Gravel with Sand (GC)
DCW-6 @ 2.5'-6'	0	41	59			Sandy Silt (ML)
DCW-9 @ 0"-14"	0	15	85	26	9	Lean Clay with Sand (CL)
DCW-10 @ 13"-102"	34	34	32			Silty Sand with Gravel (SM)

Applied Geotechnical Engineering Consultants, Inc.

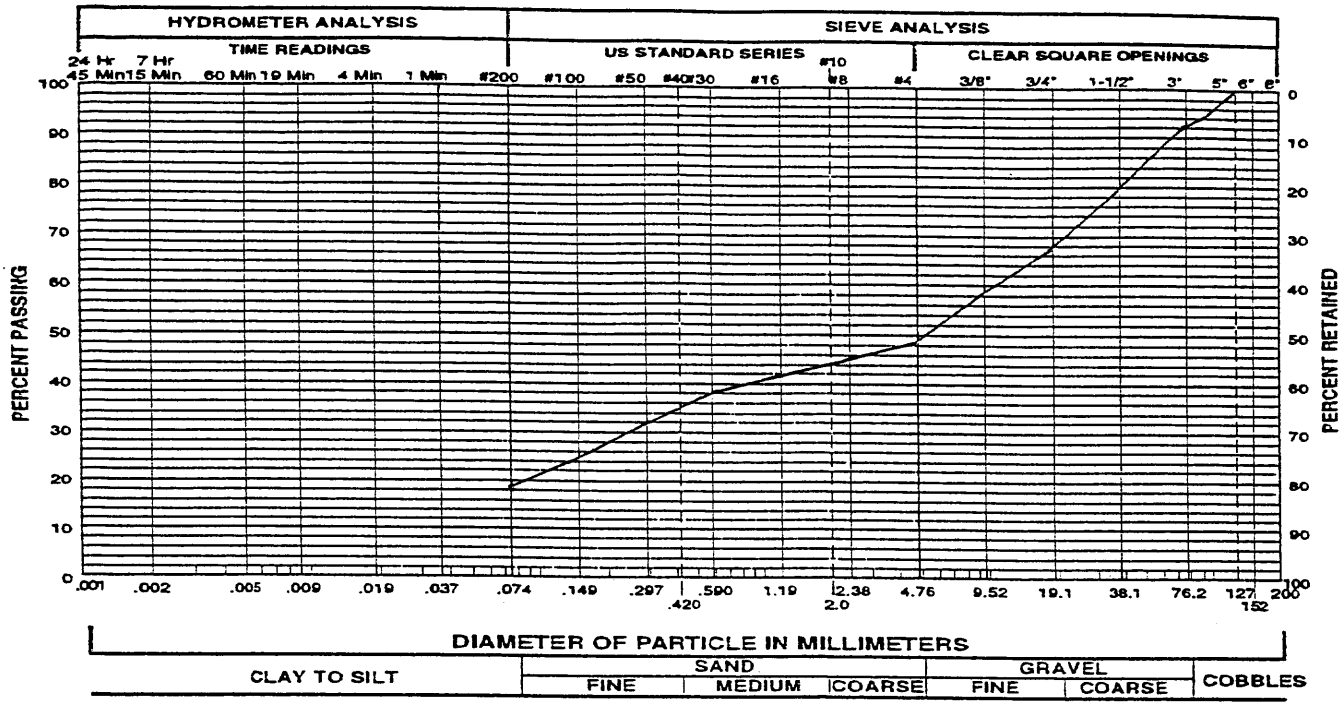

Gravel 52 % Sand 30 % Silt and Clay 18 %

Liquid Limit _____ % Plasticity Index _____ %

Sample of Silty Gravel with Sand (GM) From Test Pit DCW-1 @ 0"-38"

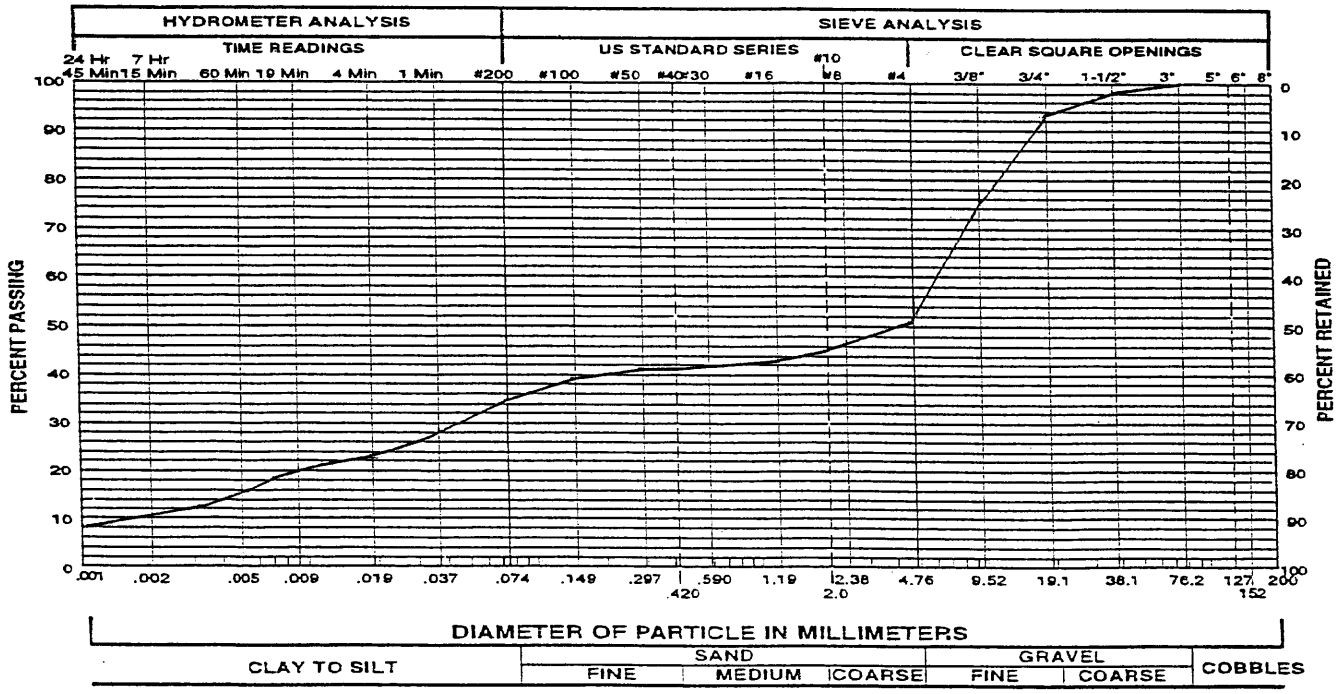

Gravel 49 % Sand 16 % Silt and Clay 35 %

Liquid Limit 33 % Plasticity Index 15 %

Sample of Clayey Gravel with Sand (GC) From Test Pit DCW-3 @ 0"-26"

Project No. 1990648 **GRADATION TEST RESULTS** Figure 1

Applied Geotechnical Engineering Consultants, Inc.

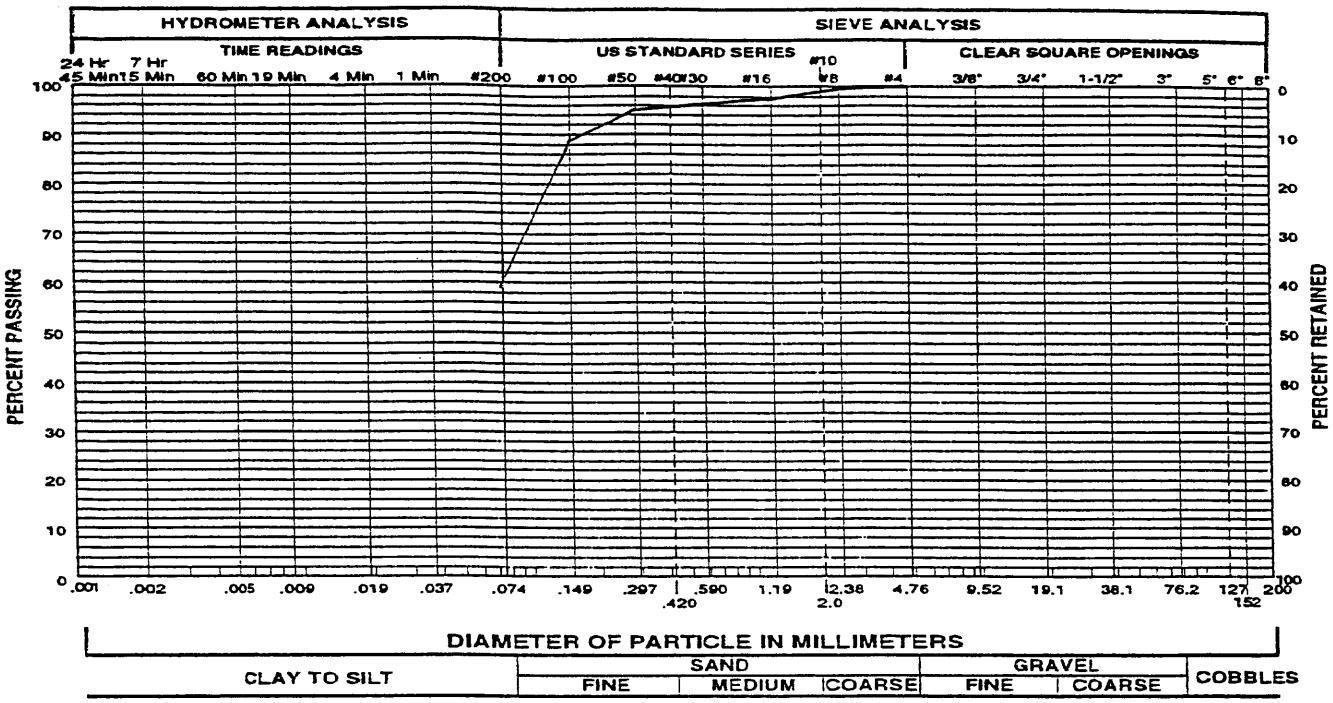

Gravel 0 % Sand 41 % Silt and Clay 59 %
Liquid Limit _____ % Plasticity Index _____ %
Sample of Sandy Silt (ML) From Test Pit DCW-6 @ 2.5'-6'

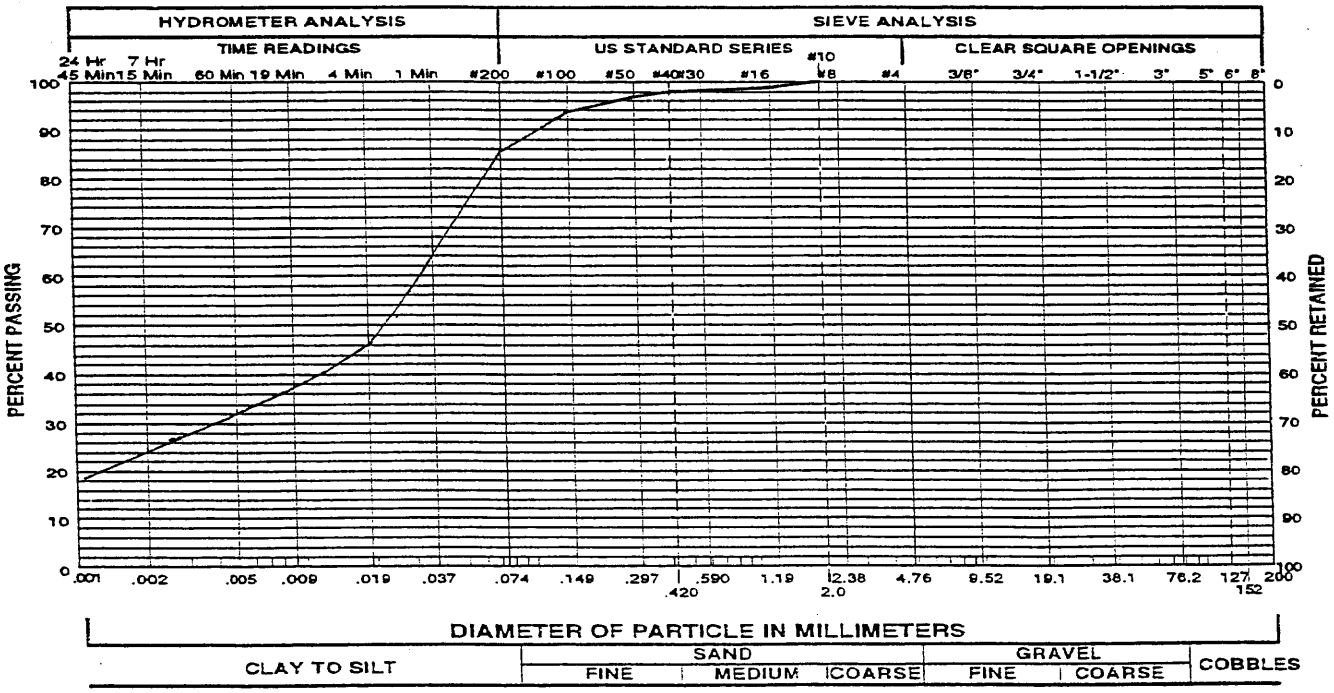

Gravel 0 % Sand 15 % Silt and Clay 85 %
Liquid Limit 26 % Plasticity Index 9 %
Sample of Lean Clay with Sand (CL) From Test Pit DCW-9 @ 0"-14"

Project No. 1990648 **GRADATION TEST RESULTS** Figure 2

Applied Geotechnical Engineering Consultants, Inc.

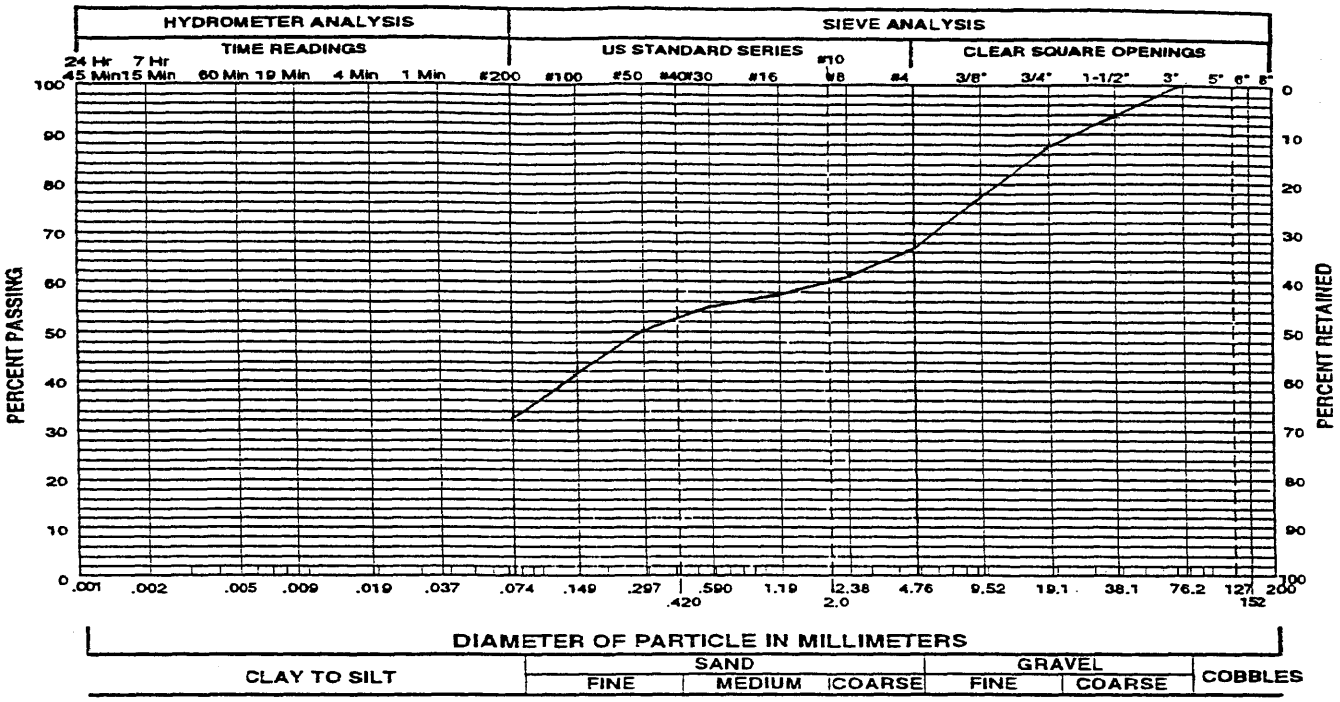

Gravel 34 % Sand 34 % Silt and Clay 32 %

Liquid Limit _____ % Plasticity Index _____ %

Sample of Silty Sand with Gravel (SM) From Test Pit DCW-10 @ 13"-102"

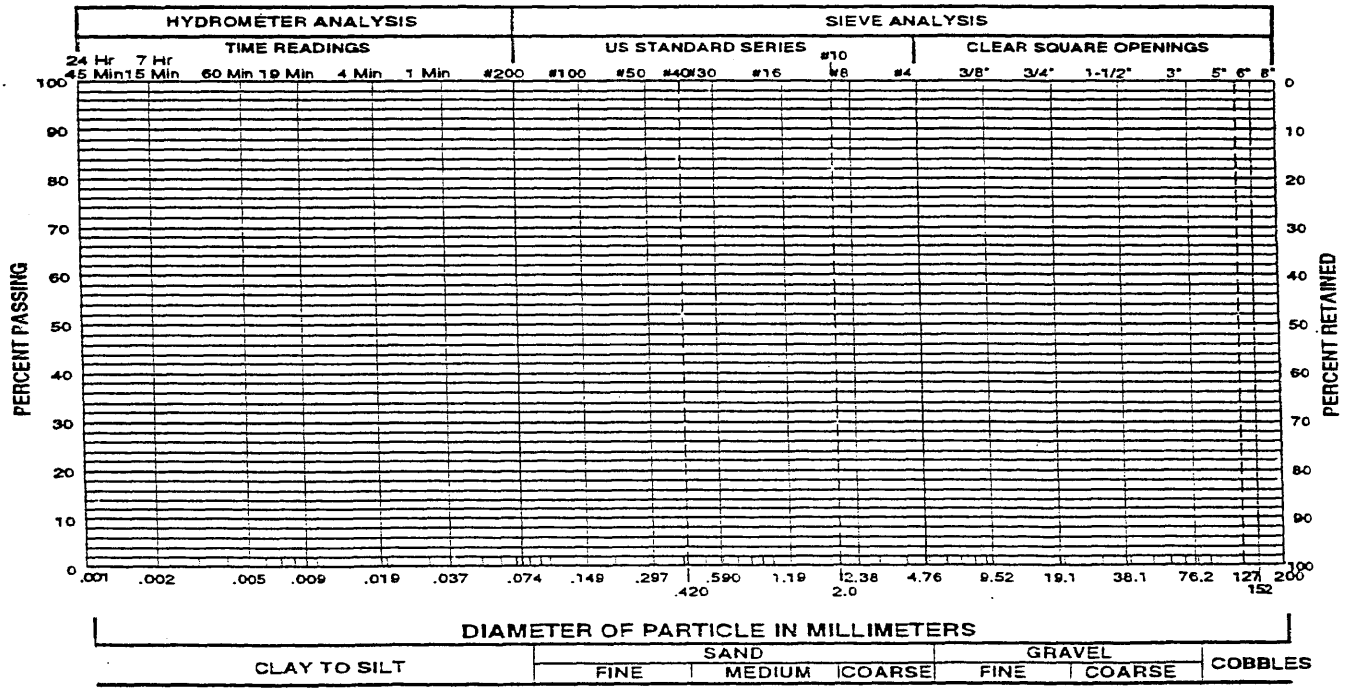

Gravel _____ % Sand _____ % Silt and Clay _____ %

Liquid Limit _____ % Plasticity Index _____ %

Sample of _____ From _____

Project No. 1990648 **GRADATION TEST RESULTS** Figure 3

Applied Geotechnical Engineering Consultants, Inc.

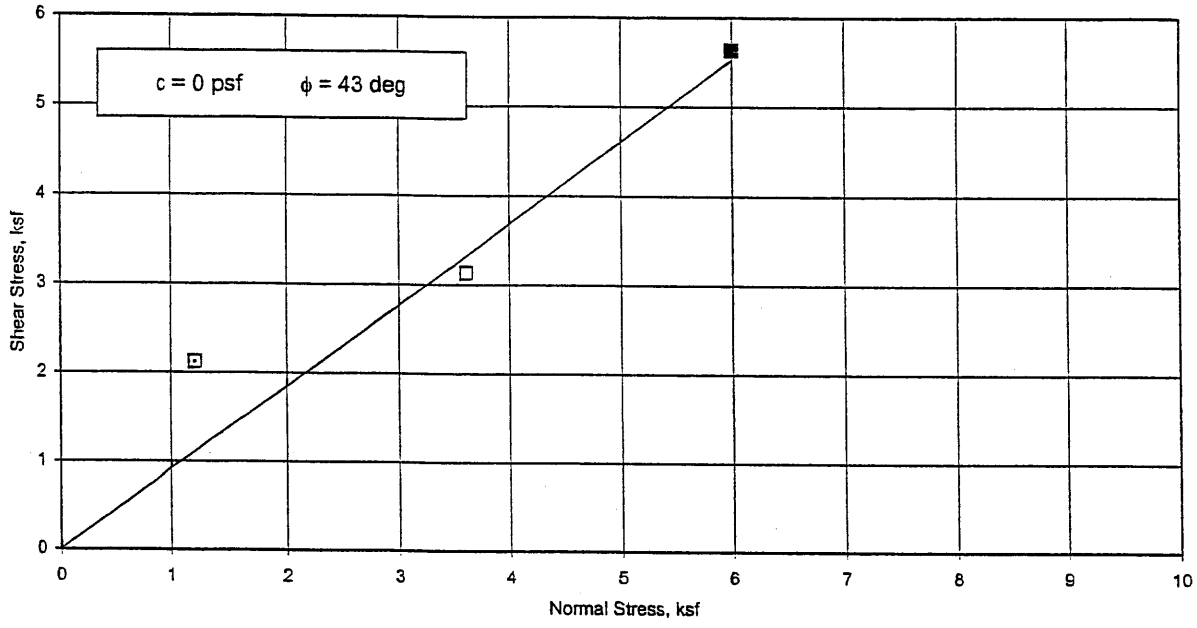

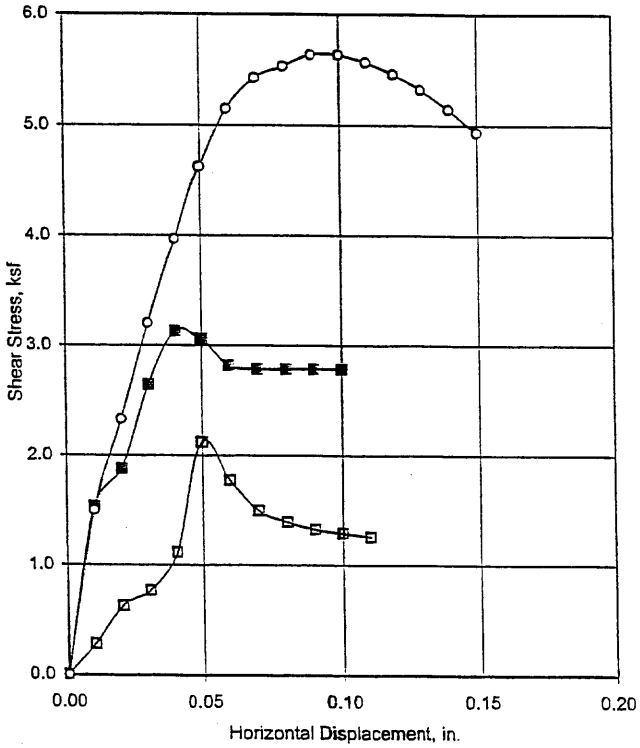

Test No. (Symbol)	1(□)	2(■)	3(O)
Sample Type	Remolded		
Length, in.	1.00	1.00	1.00
Diameter, in.	1.93	1.93	1.93
Dry Density, pcf	115	115	115
Moisture Content, %	6	6	6
Consolidation Load, ksf	1.2	3.6	6.0
Normal Load, ksf	1.2	3.6	6.0
Shear Stress, ksf	2.12	3.13	5.64
Remarks	Strain Rate 0.05 in/min.		
	Test performed on material passing the		
	No. 4 sieve.		

Sample Index Properties	
Dry Density, pcf	N/A
Moisture Content, %	N/A
Liquid Limit, %	N/A
Plasticity Index, %	N/A
Percent Gravel	52
Percent Sand	30
Percent Passing No. 200 Sieve	18

Type of Test: Consolidated Undrained/Unsaturated

Sample Description: Silty Gravel with Sand (GM) From: Test Pit DCW-1 @ 0"-38"

Project No. 1990648

DIRECT SHEAR TEST RESULTS

Figure 4

Applied Geotechnical Engineering Consultants, Inc.

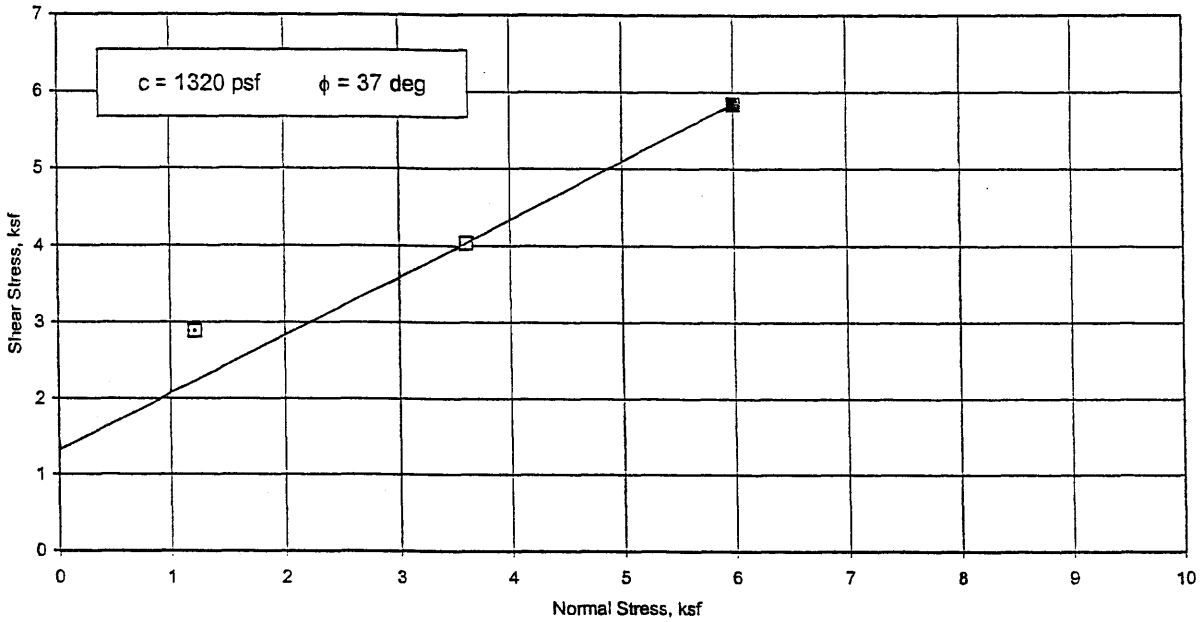

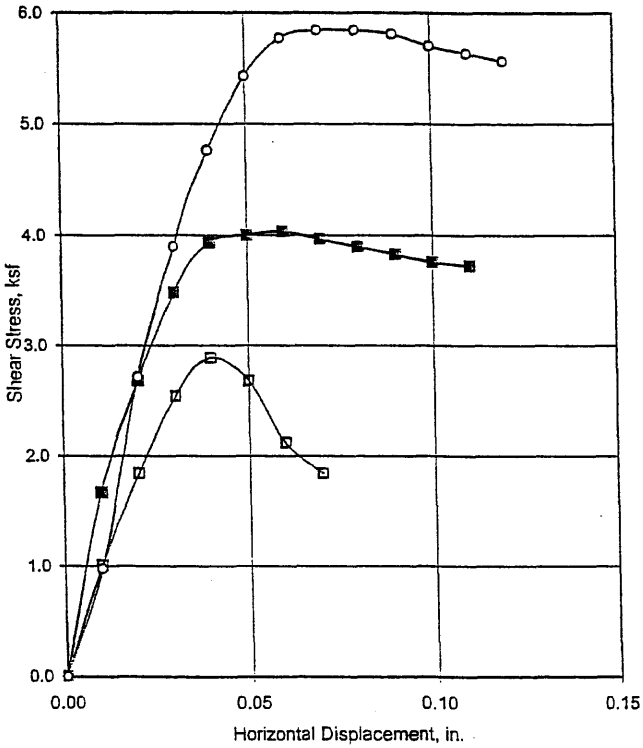

Test No. (Symbol)	1(□)	2(■)	3(O)
Sample Type	Remolded		
Length, in.	1.00	1.00	1.00
Diameter, in.	1.93	1.93	1.93
Dry Density, pcf	113	113	113
Moisture Content, %	6	6	6
Consolidation Load, ksf	1.2	3.6	6.0
Normal Load, ksf	1.2	3.6	6.0
Shear Stress, ksf	2.89	4.04	5.85
Remarks	Strain Rate 0.05 in/min.		
	Test performed on material passing the		
	No. 4 sieve.		

Sample Index Properties	
Dry Density, pcf	N/A
Moisture Content, %	N/A
Liquid Limit, %	33
Plasticity Index, %	15
Percent Gravel	49
Percent Sand	16
Percent Passing No. 200 Sieve	35

Type of Test: Consolidated Undrained/Unsaturated

Sample Description: Clayey Gravel with Sand (GC) From: Test Pit DCW-3 @ 0"-26"

Project No. 1990648

DIRECT SHEAR TEST RESULTS

Figure 5

Applied Geotechnical Engineering Consultants, Inc.

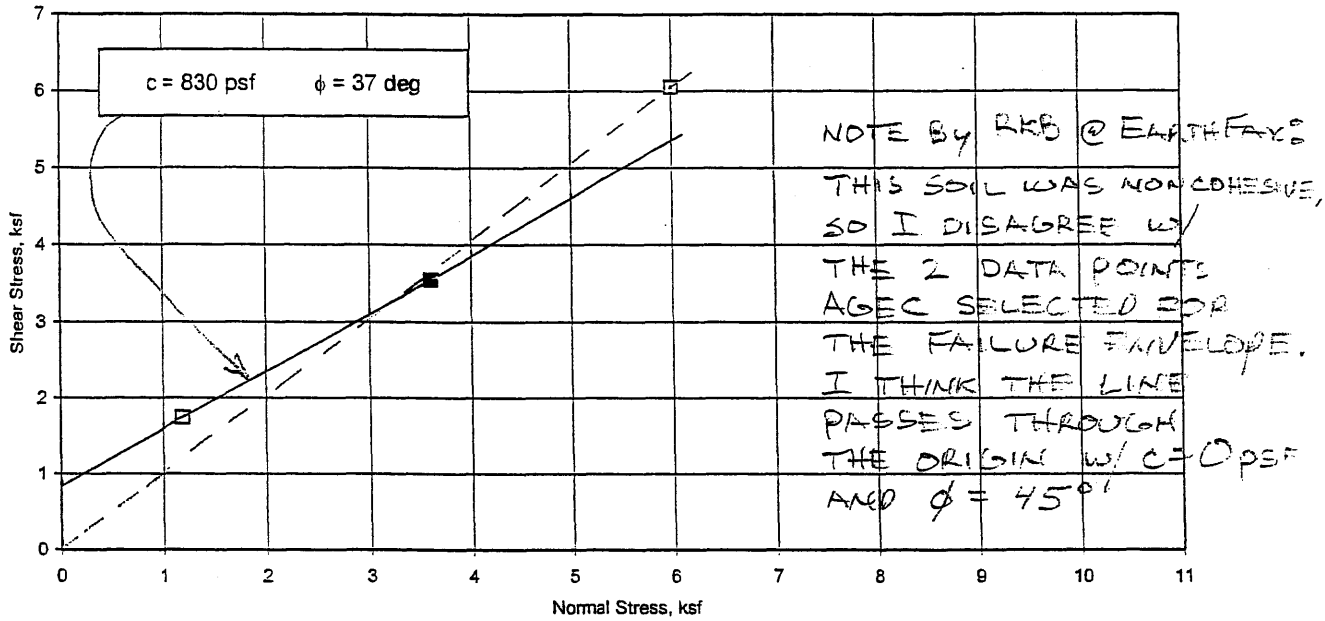

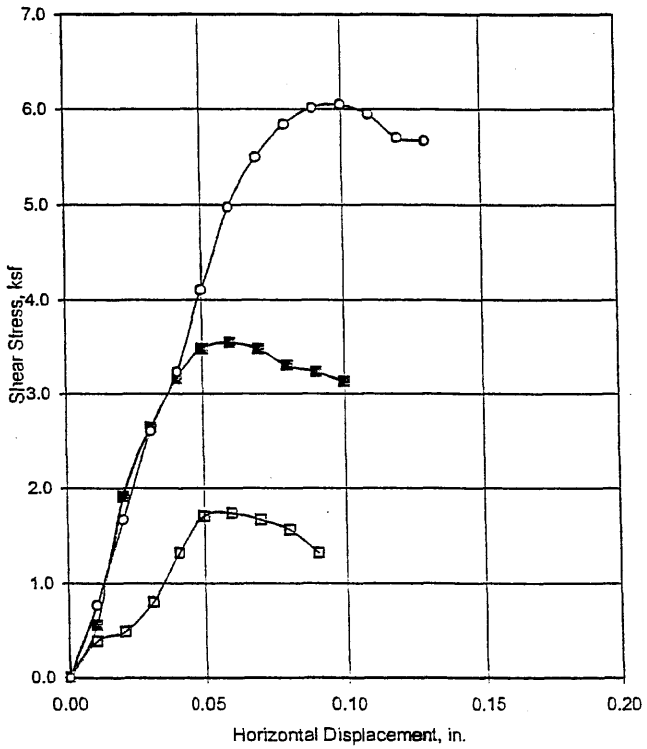

Test No. (Symbol)	1(□)	2(■)	3(O)
Sample Type	Remolded		
Length, in.	1.00	1.00	1.00
Diameter, in.	1.93	1.93	1.93
Dry Density, pcf	112	112	112
Moisture Content, %	9	9	9
Consolidation Load, ksf	1.2	3.6	6.0
Normal Load, ksf	1.2	3.6	6.0
Shear Stress, ksf	1.74	3.55	6.05
Remarks	Strain Rate 0.05 in/min.		
	Test performed on material passing the		
	No. 4 sieve.		

Sample Index Properties	
Dry Density, pcf	N/A
Moisture Content, %	N/A
Liquid Limit, %	N/A
Plasticity Index, %	N/A
Percent Gravel	0
Percent Sand	41
Percent Passing No. 200 Sieve	59

Type of Test: Consolidated Undrained/Unsaturated

Sample Description: Sandy Silt (ML) From: Test Pit DCW-6 @ 2.5'-6'

Project No. 1990648

DIRECT SHEAR TEST RESULTS

Figure 6

Applied Geotechnical Engineering Consultants, Inc.

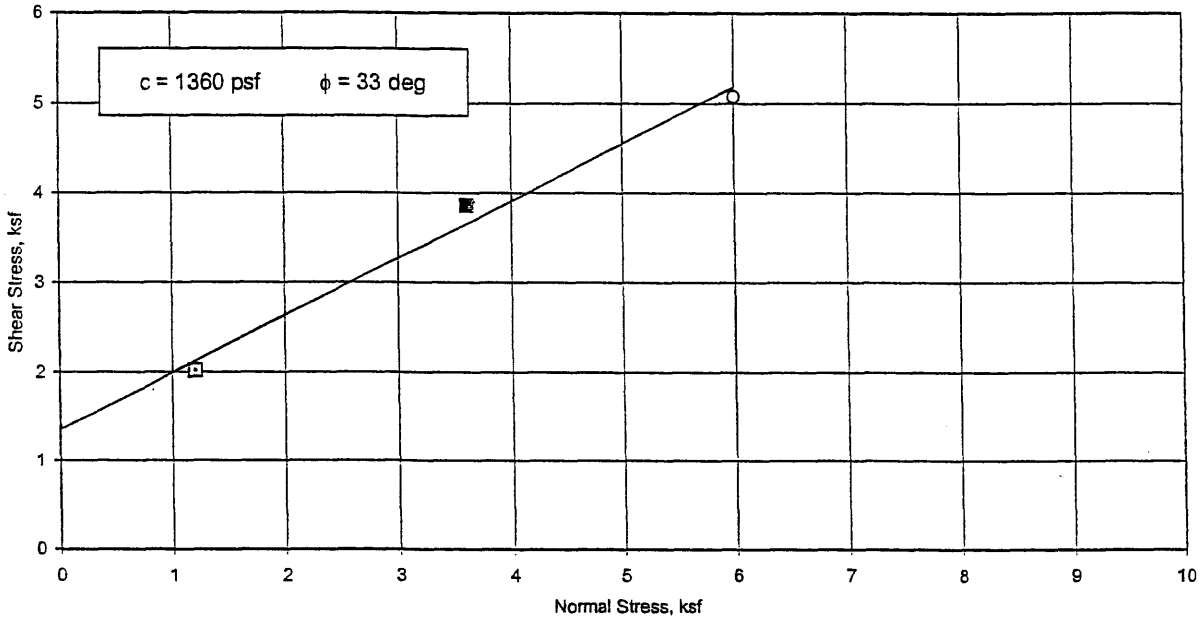

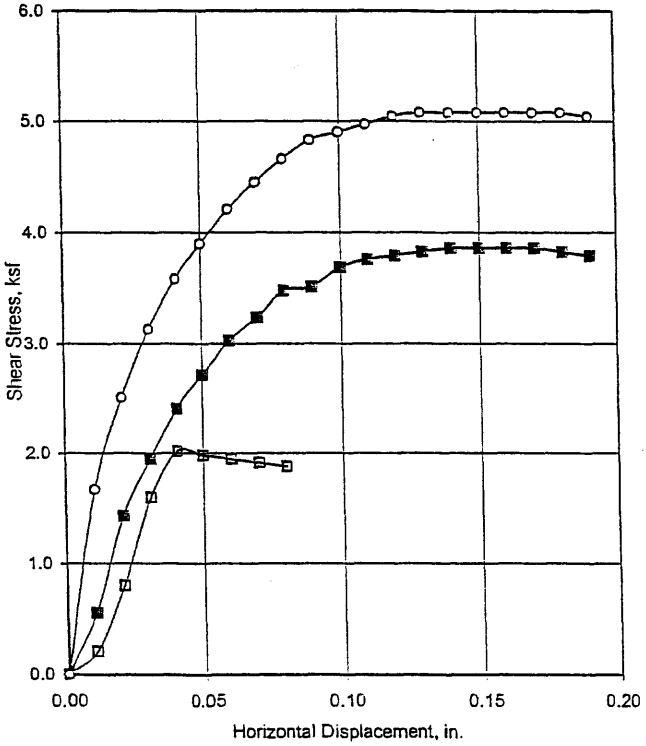

Test No. (Symbol)	1(□)	2(■)	3(○)
Sample Type	Remolded		
Length, in.	1.00	1.00	1.00
Diameter, in.	1.93	1.93	1.93
Dry Density, pcf	98	98	98
Moisture Content, %	6	6	6
Consolidation Load, ksf	1.2	3.6	6.0
Normal Load, ksf	1.2	3.6	6.0
Shear Stress, ksf	2.02	3.86	5.08
Remarks	Strain Rate 0.05 in/min.		
	Test performed on material passing the		
	No. 4 sieve.		

Sample Index Properties	
Dry Density, pcf	N/A
Moisture Content, %	N/A
Liquid Limit, %	26
Plasticity Index, %	9
Percent Gravel	0
Percent Sand	15
Percent Passing No. 200 Sieve	85

Type of Test: Consolidated Undrained/Unsaturated

Sample Description: Lean Clay with Sand (CL) From: Test Pit DCW-9 @ 0"-14"

Project No. 1990648

DIRECT SHEAR TEST RESULTS

Figure 7

Applied Geotechnical Engineering Consultants, Inc.

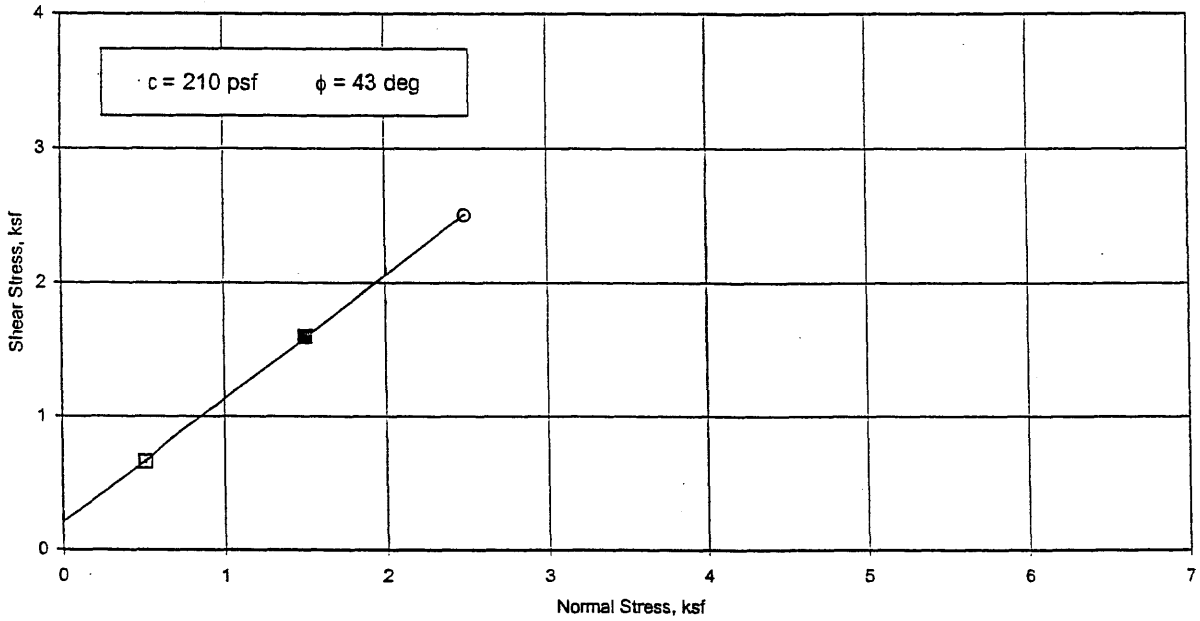

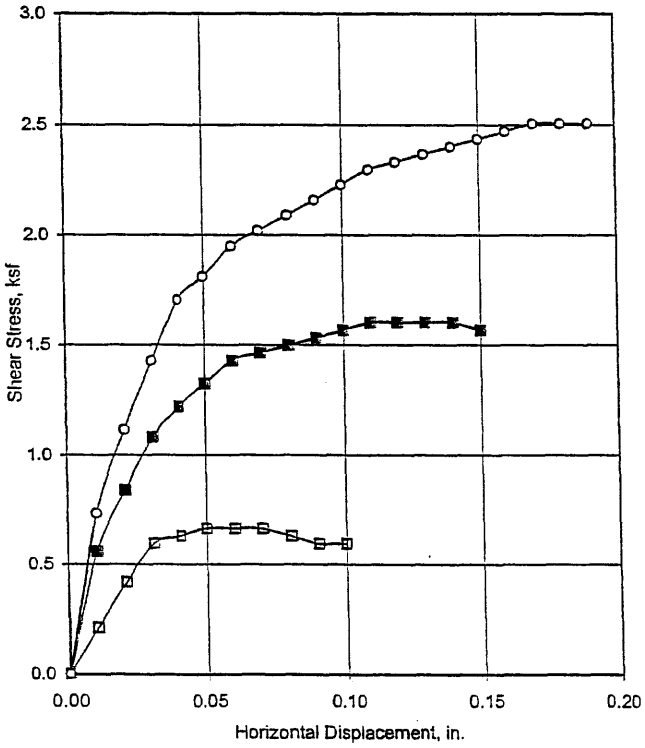

Test No. (Symbol)	1(□)	2(■)	3(○)
Sample Type	Remolded		
Length, in.	1.00	1.00	1.00
Diameter, in.	1.93	1.93	1.93
Dry Density, pcf	100	100	100
Moisture Content, %	8	8	8
Consolidation Load, ksf	0.5	1.5	2.5
Normal Load, ksf	0.5	1.5	2.5
Shear Stress, ksf	0.66	1.60	2.51
Remarks	Strain Rate 0.05 in/min.		
	Test performed on material passing the		
	No. 4 sieve.		

Sample Index Properties	
Dry Density, pcf	N/A
Moisture Content, %	N/A
Liquid Limit, %	N/A
Plasticity Index., %	N/A
Percent Gravel	34
Percent Sand	34
Percent Passing No. 200 Sieve	32

Type of Test: Consolidated Undrained/Unsaturated

Sample Description: Silty Sand with Gravel (SM) From: Test Pit DCW-10 @ 13"-102"

Project No. 1990648

DIRECT SHEAR TEST RESULTS

Figure 8

Bishop Circular Surfaces - Most Critical Surfaces

Canyon Fuel Company, LLC
Dugout Canyon Mine
Waste Rock Pile
Section A-A'
6200 Failure Surfaces
File: WRA-ALV.DAT

Minimum Factor of Safety : 1.591

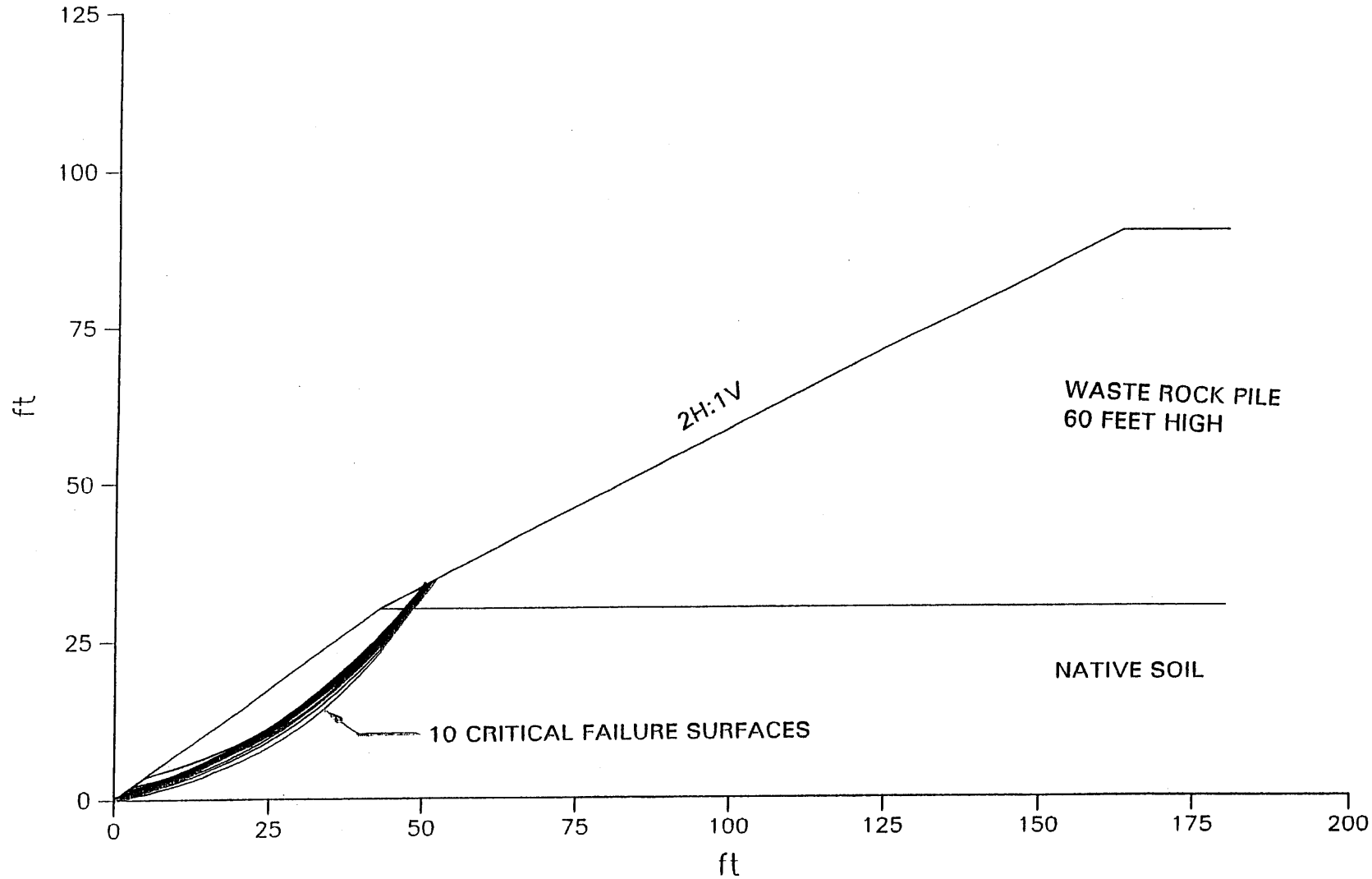

Bishop Circular Surfaces – Search for Critical Surfaces

Canyon Fuel Company, LLC
Dugout Canyon Mine
Waste Rock Pile
Section A-A'
6200 Failure Surfaces
File: WRA-ALV.DAT

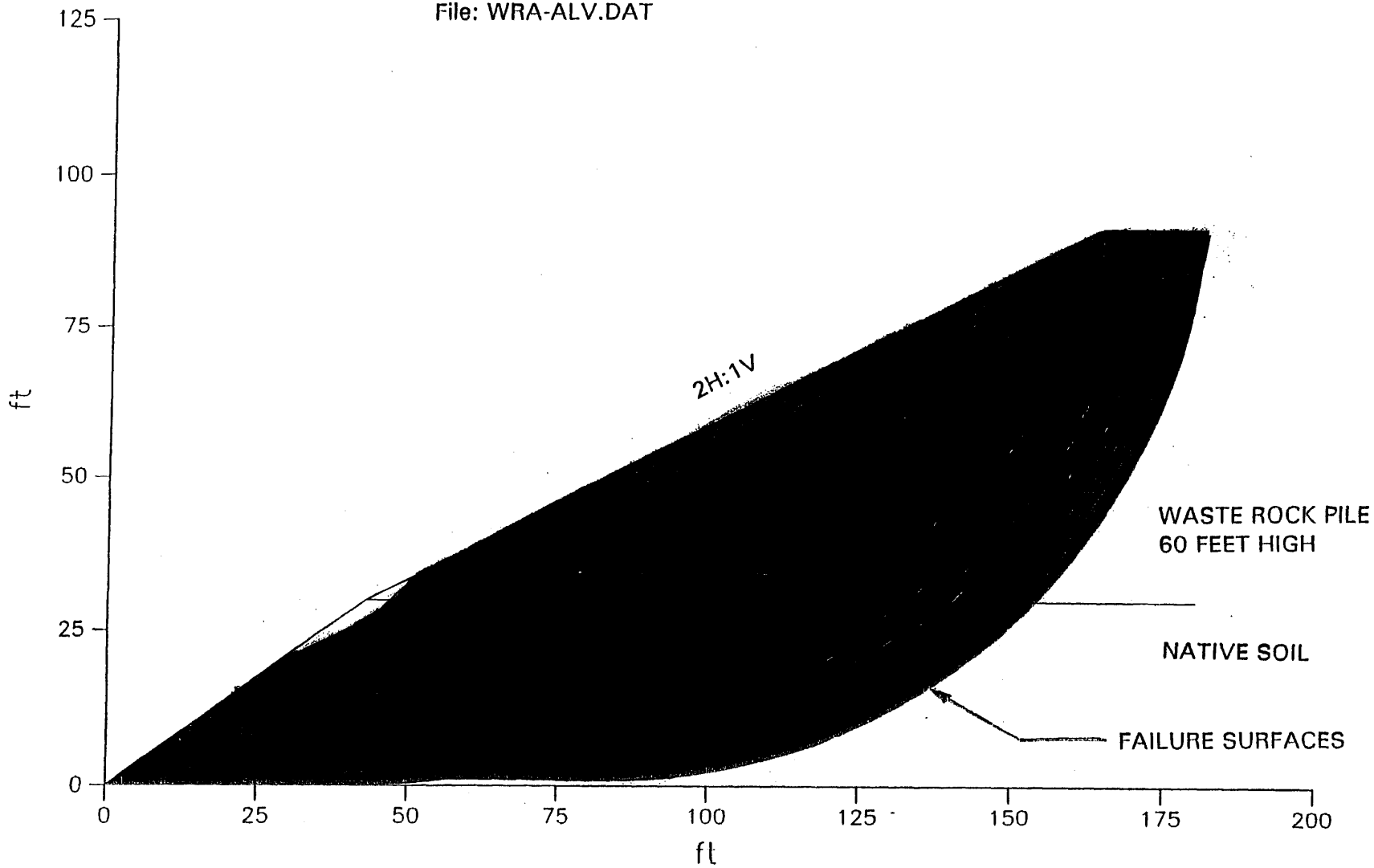

```
TITLE
DUGOUT CANYON MINE
PROPOSED WASTE-ROCK PILE
SECTION A-A', ALLUVIAL SOIL, NATIVE SLOPE
PROFIL
4 3
0 0 43 30 2
43 30 163 90 1
163 90 180 90 1
43 30 180 30 2
SOIL
2
122 122 490 35 0 0 0
122 122 0 43 0 0 0
CIRCL2
31 200 0 30 50 180 0 5 25 -35
END
```

```
*****************************************************************
*****                    GeoSlope                           *****
*****                  Version 5.00                         *****
*****                                                       *****
*****          (c)1992 by GEOCOMP Corp, Concord, MA         *****
*****            Licensed to EarthFax Engineering           *****
*****************************************************************
```

Problem Title: DUGOUT CANYON MINE
Description: PROPOSED WASTE-ROCK PILE
Remarks: SECTION A-A', ALLUVIAL SOIL, NATIVE SLOPE

```
*****************************************************************
*****                    INPUT DATA                         *****
*****************************************************************
```

Profile Boundaries

Number of Boundaries: 4
Number of Top Boundaries: 3

Boundary No.	X-Left (ft)	Y-Left (ft)	X-Right (ft)	Y-Right (ft)	Soil Type Below Bnd
1	0.00	0.00	43.00	30.00	2
2	43.00	30.00	163.00	90.00	1
3	163.00	90.00	180.00	90.00	1
4	43.00	30.00	180.00	30.00	2

Soil Parameters

Number of Soil Types : 2

Soil Type No.	Total Unit Wt. (pcf)	Saturated Unit Wt. (pcf)	Cohesion Intercept (psf)	Friction Angle (deg)	Pore Pressure Param.	Pressure Constant (psf)	Piez. Surface No.
1	122.0	122.0	490.0	35.0	0.00	0.0	0
2	122.0	122.0	0.0	43.0	0.00	0.0	0

****
***** TRIAL SURFACE GENERATION *****
****

Data for Generating Circular Surfaces

Number of Initiation Points:	31
Number of Surfaces From Each Point:	200
Left Initiation Point:	0.00 ft
Right Initiation Point:	30.00 ft
Left Termination Point:	50.00 ft
Right Termination Point:	180.00 ft
Minimum Elevation:	0.00 ft
Segment Length:	5.00 ft
Positive Angle Limit:	25.00 deg
Negative Angle Limit:	-35.00 deg

****
***** RESULTS *****
****

Critical Surfaces

No.	Safety Factor	Center X (ft)	Center Y (ft)	Circle Radius (ft)
1	1.591	-26.84	95.11	98.83
2	1.593	-16.84	79.65	81.41
3	1.612	-18.05	83.16	85.10
4	1.613	-10.85	74.00	73.23
5	1.619	-14.55	77.91	79.26
6	1.622	-12.11	76.75	76.17
7	1.628	-14.19	81.99	80.82
8	1.630	-14.40	82.43	81.29
9	1.633	-8.69	68.06	68.61
10	1.633	-20.87	90.73	92.21

Bishop Circular Surfaces - Most Critical Surfaces

Canyon Fuel Company, LLC
Dugout Canyon Mine
Waste Rock Pile
Section A-A'
6200 Failure Surfaces
File: WRA-MS1.DAT

Minimum Factor of Safety : 2.387

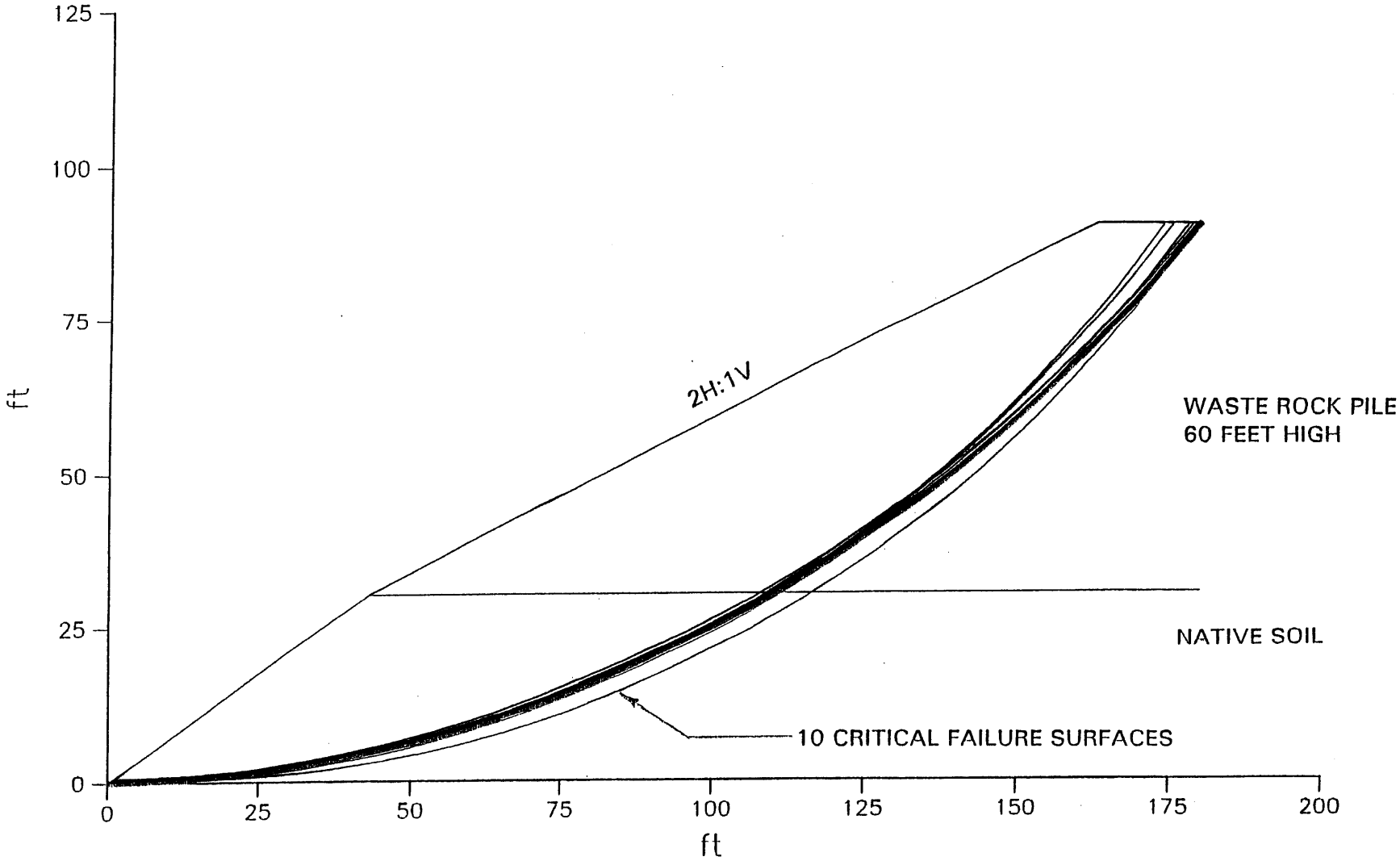

Bishop Circular Surfaces – Search for Critical Surfaces

Canyon Fuel Company, LLC
Dugout Canyon Mine
Waste Rock Pile
Section A-A'
6200 Failure Surfaces
File: WRA-MS1.DAT

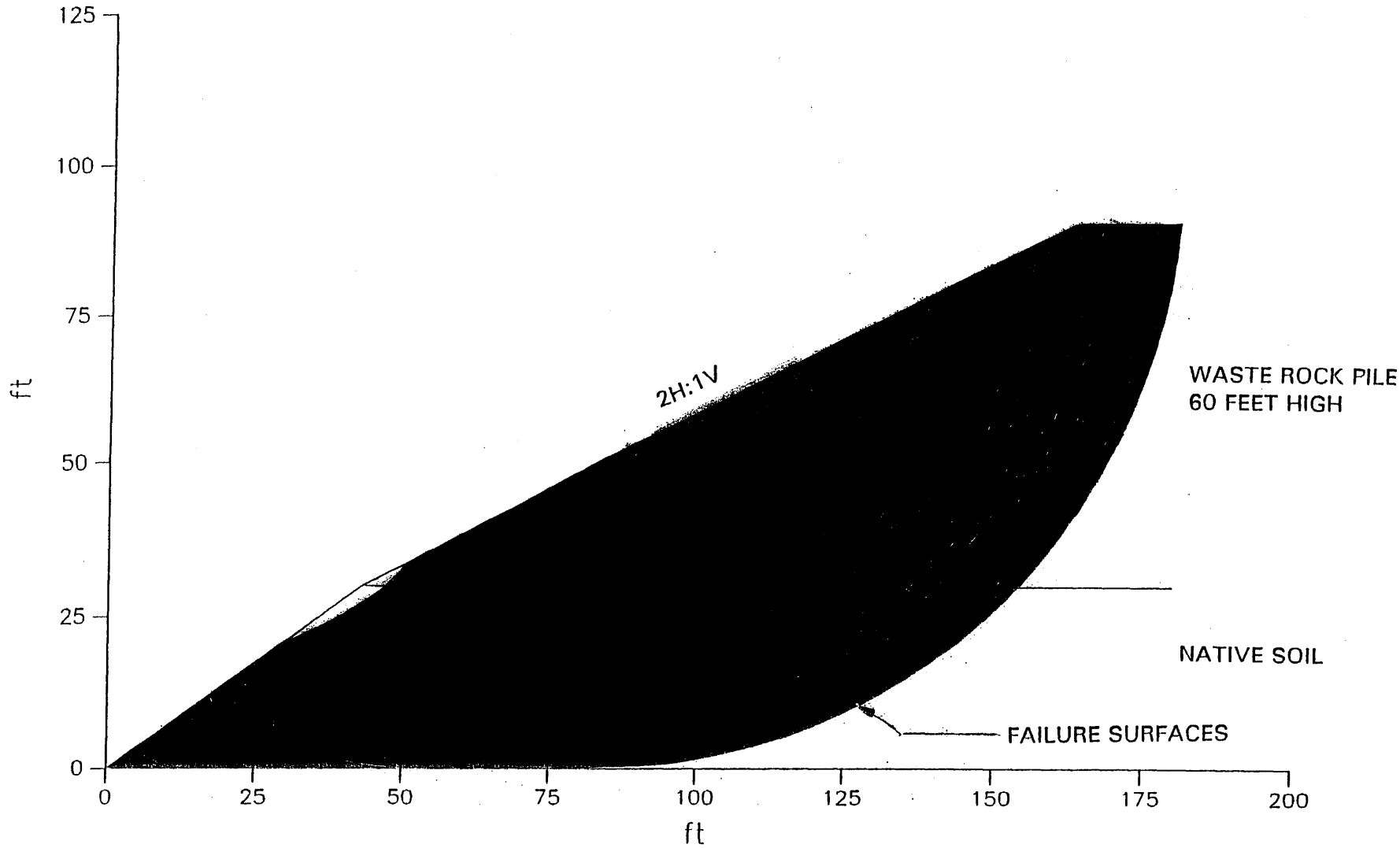

```
TITLE
DUGOUT CANYON MINE
PROPOSED WASTE-ROCK PILE
SECTION A-A', MANCOS SOIL, NATIVE SLOPE
PROFIL
4 3
0 0 43 30 2
43 30 163 90 1
163 90 180 90 1
43 30 180 30 2
SOIL
2
122 122 490 35 0 0 0
122 122 1360 33 0 0 0
CIRCL2
31 200 0 30 50 180 0 5 25 -35
END
```

```
*****************************************************************
*****                    GeoSlope                           *****
*****                  Version 5.00                         *****
*****                                                       *****
*****     (c)1992 by GEOCOMP Corp, Concord, MA              *****
*****        Licensed to EarthFax Engineering               *****
*****************************************************************
```

Problem Title : DUGOUT CANYON MINE
Description : PROPOSED WASTE-ROCK PILE
Remarks : SECTION A-A', MANCOS SOIL, NATIVE SLOPE

```
*****************************************************************
*****                    INPUT DATA                         *****
*****************************************************************
```

Profile Boundaries

Number of Boundaries: 4
Number of Top Boundaries: 3

Boundary No.	X-Left (ft)	Y-Left (ft)	X-Right (ft)	Y-Right (ft)	Soil Type Below Bnd
1	0.00	0.00	43.00	30.00	2
2	43.00	30.00	163.00	90.00	1
3	163.00	90.00	180.00	90.00	1
4	43.00	30.00	180.00	30.00	2

Soil Parameters

Number of Soil Types: 2

Soil Type No.	Total Unit Wt. (pcf)	Saturated Unit Wt. (pcf)	Cohesion Intercept (psf)	Friction Angle (deg)	Pore Pressure Param.	Pressure Constant (psf)	Piez. Surface No.
1	122.0	122.0	490.0	35.0	0.00	0.0	0
2	122.0	122.0	1360.0	33.0	0.00	0.0	0

****
***** TRIAL SURFACE GENERATION *****
****

Data for Generating Circular Surfaces

Number of Initiation Points:	31
Number of Surfaces From Each Point:	200
Left Initiation Point:	0.00 ft
Right Initiation Point:	30.00 ft
Left Termination Point:	50.00 ft
Right Termination Point:	180.00 ft
Minimum Elevation:	0.00 ft
Segment Length:	5.00 ft
Positive Angle Limit:	25.00 deg
Negative Angle Limit:	-35.00 deg

****
***** RESULTS *****
****

Critical Surfaces

No.	Safety Factor	Center X (ft)	Center Y (ft)	Circle Radius (ft)
1	2.387	-4.27	233.50	233.54
2	2.388	-6.73	238.39	238.49
3	2.389	-5.26	232.61	232.67
4	2.391	-8.87	241.03	241.19
5	2.392	-0.33	216.70	216.70
6	2.393	-0.13	227.00	226.30
7	2.393	-2.03	219.90	219.91
8	2.395	3.18	216.25	215.57
9	2.395	11.14	203.34	202.90
10	2.395	2.04	209.21	209.22

Bishop Circular Surfaces Most Critical Surfaces

Canyon Fuel Company, LLC
Dugout Canyon Mine
Waste Rock Pile
Section A-A'
6000 Failure Surfaces
File: WRA-WR.DAT

Minimum Factor of Safety : 2.271

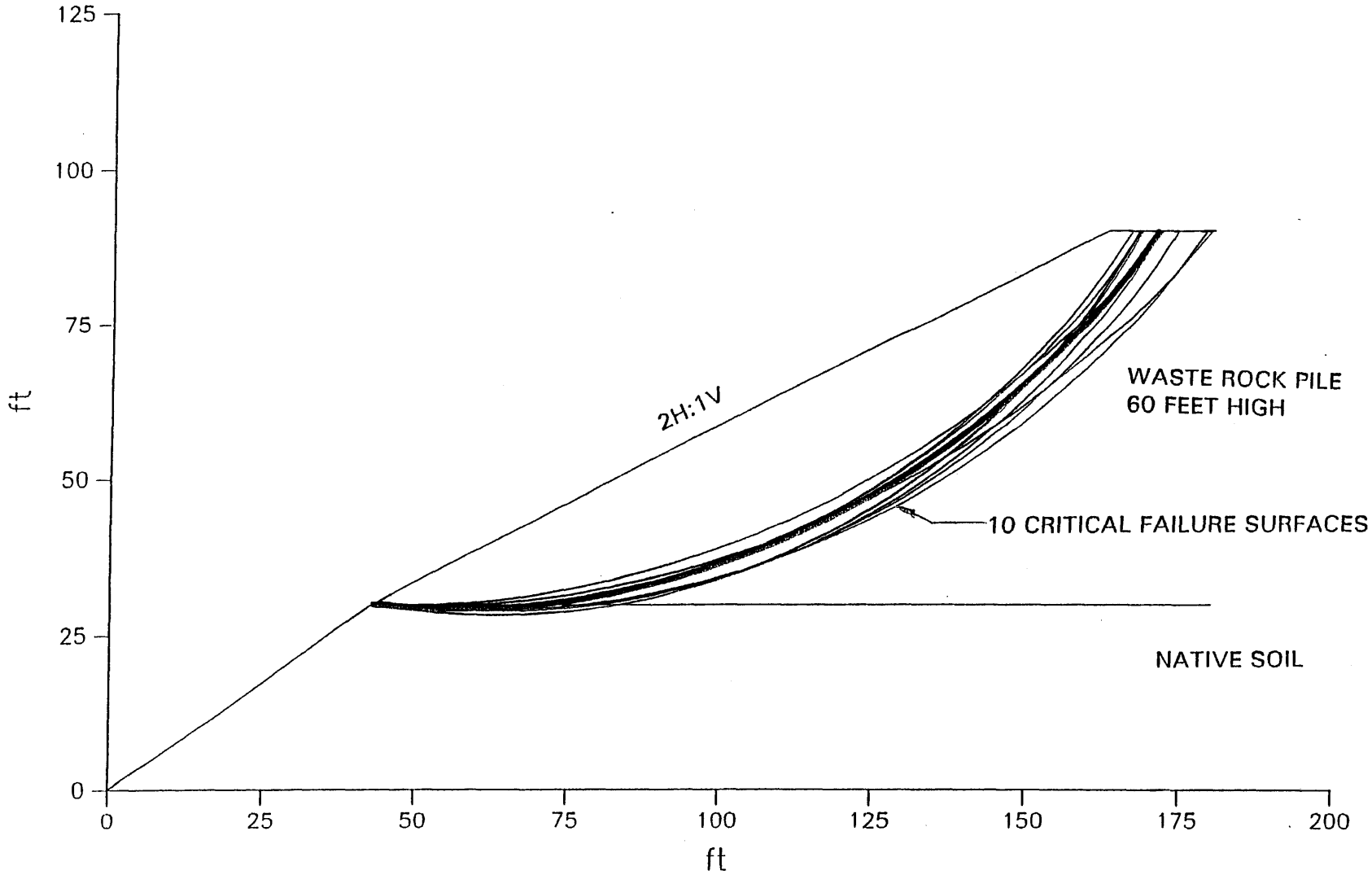

Bishop Circular Surfaces – Search for Critical Surfaces

Canyon Fuel Company, LLC
Dugout Canyon Mine
Waste Rock Pile
Section A-A'
6000 Failure Surfaces
File: WRA-WR.DAT

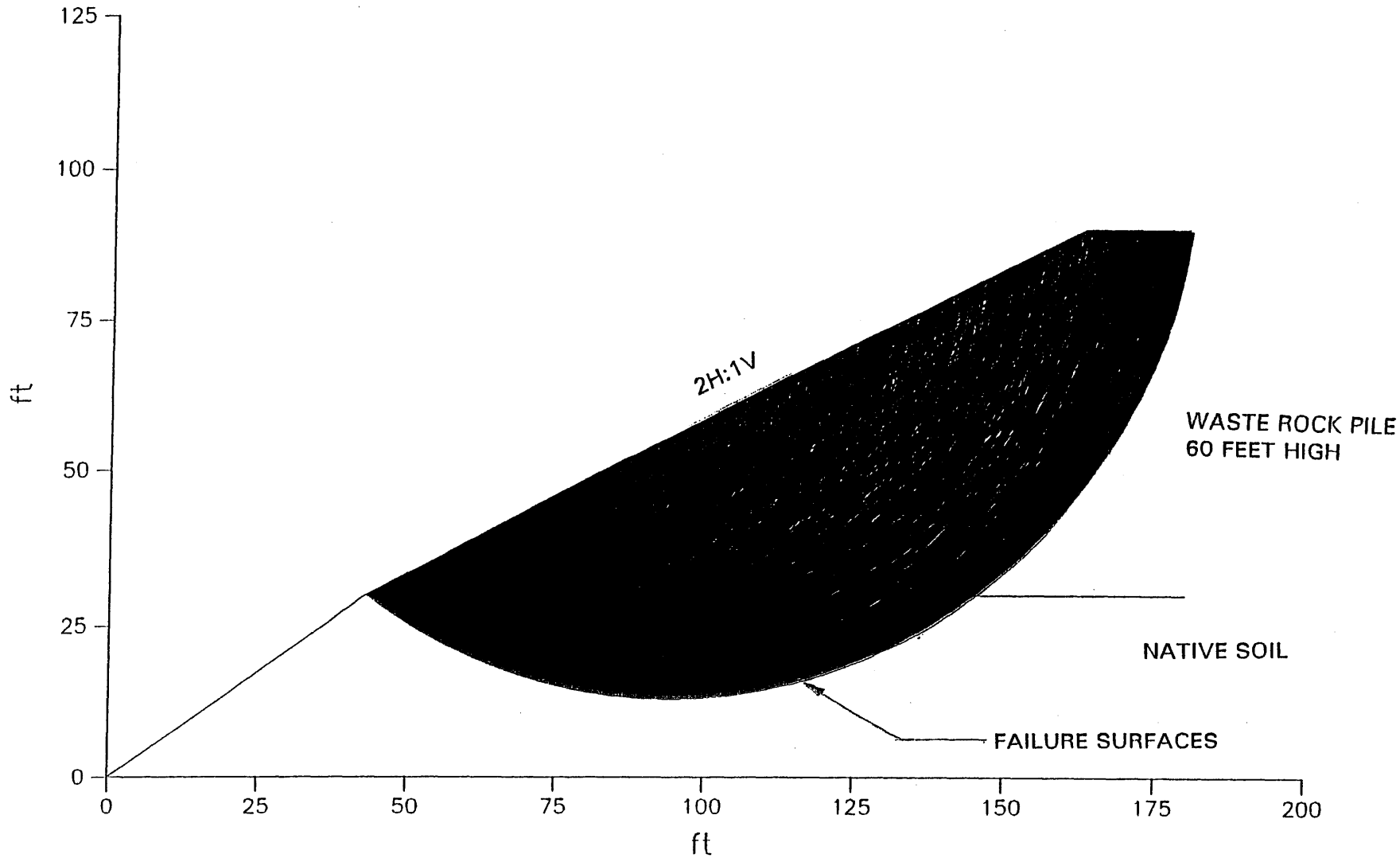

```
TITLE
DUGOUT CANYON MINE
PROPOSED WASTE-ROCK PILE
SECTION A-A', WASTE ROCK SLOPE ONLY
PROFIL
4 3
0 0 43 30 2
43 30 163 90 1
163 90 180 90 1
43 30 180 30 2
SOIL
2
122 122 490 35 0 0 0
122 122 0 43 0 0 0
CIRCL2
6 500 43 48 55 180 0 5 25 -35
END
```

```
*****************************************************************
*****                    GeoSlope                           *****
*****                  Version 5.00                         *****
*****                                                       *****
*****   (c)1992 by GEOCOMP Corp, Concord, MA                *****
*****          Licensed to EarthFax Engineering             *****
*****************************************************************
```

Problem Title: DUGOUT CANYON MINE
Description: PROPOSED WASTE-ROCK PILE
Remarks: SECTION A-A', WASTE ROCK SLOPE ONLY

```
*****************************************************************
*****                    INPUT DATA                         *****
*****************************************************************
```

Profile Boundaries

Number of Boundaries: 4
Number of Top Boundaries: 3

Boundary No.	X-Left (ft)	Y-Left (ft)	X-Right (ft)	Y-Right (ft)	Soil Type Below Bnd
1	0.00	0.00	43.00	30.00	2
2	43.00	30.00	163.00	90.00	1
3	163.00	90.00	180.00	90.00	1
4	43.00	30.00	180.00	30.00	2

Soil Parameters

Number of Soil Types: 2

Soil Type No.	Total Unit Wt. (pcf)	Saturated Unit Wt. (pcf)	Cohesion Intercept (psf)	Friction Angle (deg)	Pore Pressure Param.	Pressure Constant (psf)	Piez. Surface No.
1	122.0	122.0	490.0	35.0	0.00	0.0	0
2	122.0	122.0	0.0	43.0	0.00	0.0	0

****
***** TRIAL SURFACE GENERATION *****
****

Data for Generating Circular Surfaces

Number of Initiation Points:	6
Number of Surfaces From Each Point:	500
Left Initiation Point:	43.00 ft
Right Initiation Point:	48.00 ft
Left Termination Point:	55.00 ft
Right Termination Point:	180.00 ft
Minimum Elevation:	0.00 ft
Segment Length:	5.00 ft
Positive Angle Limit:	25.00 deg
Negative Angle Limit:	-35.00 deg

****
***** RESULTS *****
****

Critical Surfaces

No.	Safety Factor	Center X (ft)	Center Y (ft)	Circle Radius (ft)
1	2.271	56.82	167.20	137.89
2	2.287	57.37	157.99	128.79
3	2.292	63.42	153.66	125.33
4	2.297	51.46	196.36	166.58
5	2.301	63.46	148.34	120.10
6	2.304	63.45	147.51	119.27
7	2.307	63.94	159.04	130.08
8	2.311	63.03	169.80	140.59
9	2.325	47.82	187.82	157.89
10	2.329	57.83	160.97	131.20

RA ATTACHMENT 5-3

REFUSE PILE VOLUME CALCULATIONS

REGISTERED PROFESSIONAL ENGINEER
2-11-05
No. 189797
LAYNE D.
JENSEN
STATE OF UTAH

Determination of Refuse Tonnage for Final Pile Configuration

The existing topography shown on the maps is representative of the site when the last aerial survey was conducted on August 12, 2004. At that time Olympus Aerial Surveys had estimated that 46,217 CY of coal refuse had already been placed at the site.

At the final pile configuration an additional 639,838 CY of coal waste will have been added to the refuse pile.

Total coal refuse in the pile = 46,217 CY + 639,838 CY = 686,055 CY

Unit weight of coal refuse = 110 lbs/ft^3

Tonnage = (686,055 CY * 27 ft^3/CY * 110 lbs/ft^3) / 2000 lbs/ft^3 = 1,018,792 tons

CHAPTER 7

HYDROLOGY

TABLE OF CONTENTS (Continued)

751 Water Quality Standards and Effluent Limitations 7-26
752 Sediment Control Measures 7-26
752.100 Siltation Structures and Diversions 7-27
752.200 Road Drainage 7-26
753 Impoundments and Discharge Structures 7-27
754 Disposal of Excess Spoil, Coal Mine Waste and Noncoal Mine Waste 7-27
755 Casing and Sealing of Wells 7-27

760 RECLAMATION 7-27

761 General Requirements 7-27
762 Roads 7-28
762.100 Restoring the Natural Drainage Patterns 7-28
762.200 Reshaping Cut and Fill Slopes 7-29
763 Siltation Structures 7-29
763.100 Maintenance of Siltation Structures 7-29
763.200 Removal of Siltation Structures 7-29
764 Structure Removal 7-29
765 Permanent Casing and Sealing of Wells 7-30

LIST OF FIGURES

RA Figure 7-1 Potentiometric Surface 7-31

LIST OF TABLES

~~RA Table 7-1 Watershed Parameters~~ . . . . . ~~7-32~~
~~RA Table 7-2 Sediment Pond Design Summary~~ . . . . . ~~7-33~~
RA Table 7-3 Diversion Design Summary 7-34
RA Table 7-4 Culvert Design Summary 7-35

LIST OF ATTACHMENTS

RA Attachment 7-1 Baseline Data
RA Attachment 7-2 Sediment Pond Design Calculations
~~RA Attachment 7-3 Energy Dissipation Basin Calculations~~
RA Attachment 7-3 Topsoil/Subsoil Stockpile Sediment Control
RA Attachment 7-4 Diversion and Culvert Design Calculations
RA Attachment 7-5 Climatological Information
RA Attachment 7-6 Soldier Canyon Mine Plate 7-1

LIST OF PLATES

RA Plate 7-1 Drainages, Sediment Control Structures and Sampling Locations
RA Plate 7-2 As-Built Sediment Pond Details
RA Plate 7-3 Reclaimed Drainages and Watersheds

730 OPERATION PLAN

731 General Requirements

731.100 Hydrologic-Balance Protection

Groundwater Protection. The affect on groundwater in this area is expected to be minimal as discussed in Section 724.200. Groundwater will not be encountered or used during construction, maintenance, and reclamation of the refuse pile. The three wells that have been drilled in this area ~~will be~~ are used to aid in monitoring the potential impacts of the refuse pile.

Surface Water Protection. To protect the hydrologic balance, construction, maintenance, and reclamation operations will be conducted to handle earth materials and runoff in a manner that prevents, to the extent possible, additional contributions of suspended solids to streamflow outside the permit area, and otherwise prevents water pollution. Additionally, CFC will maintain adequate runoff- and sediment-control facilities to protect local surface waters.

During initial construction and prior to installation of all runoff- and sediment-control facilities, silt fences ~~will be~~ were installed along the down gradient edge of the refuse pile area. These silt fences ~~will be~~ were installed in accordance with the approved M&RP. If required for control of local erosion, straw-bale dikes may also be installed at the site during initial construction. The silt fences and straw-bale dikes will be periodically inspected, and accumulated sediment will be removed as needed to maintain functionality. Once the diversion ditches are installed, the silt fences and straw-bale dikes will be removed.

The initial placement of waste rock will take place in an area lower than the existing surrounding grade. The operator will construct the appropriate ditches adjacent to and upstream of the growing pile once the surface of the pile meets and exceeds the level of the surrounding existing ground

surface. Prior to construction of the ditches, a temporary interim berm will be constructed upstream of the below-grade storage area to divert water to the sediment pond (RA Plate 7-1)

Once the runoff- and sediment-control facilities outlined in Section 732 have been installed, these structures will prevent additional contributions of suspended solids to streamflow outside the permit area. A description of sediment control following reclamation is presented in Sections 540 and 760 of this submittal and the approved M&RP.

731.200 Water Monitoring

Groundwater Monitoring. Groundwater monitoring associated with the refuse pile will include quarterly water level measurements. In accordance with Table 7-4, Groundwater Monitoring Program of the approved M&RP, Wells DH-1, DH-2 and DH-3 will be monitored using Protocols A, 1. Water quality samples will be obtained quarterly from DH-1 beginning in the first quarter of 2003 and ending the 4th quarter of 2004. Thereafter, a water quality sample from DH-1 will be taken annually, until bond release. The samples from DH-1 will be analyzed for the parameters listed in Table 7-4, "Groundwater Monitoring Program". At least one borehole volume of water will be removed from the well prior to obtaining the water sample for analysis. Water level data collected through the first quarter of 2002 are presented in RA Attachment 7-1.

Should the subsoil stockpile be moved to the area of Well DH-2, the casing will be elevated above the stockpile to allow for continued monitoring (RA Plate 7-1).

Surface Water Monitoring. Two surface water monitoring sites ~~will be~~ are located in the refuse pile area (see RA Plate 7-1). These stations are located on the ephemeral drainage to the west and southwest of the pile. One point is located upstream of the pile, while the second point is located downstream of the site at the county road crossing. These stations ~~will be~~ are monitored to evaluate surface-water conditions upstream and downstream from the pile. The stations will be monitored in accordance with the schedule and protocols established in the approved M&RP. In accordance with Table 7-5, Surface Water Monitoring Program of the approved M&RP, Surface

Water Monitoring Sites SS-1 and SS-2 ~~will be~~ are monitored using Protocol 1. Data collected through the third quarter of 2002 are presented in RA Attachment 7-1.

731.300 Acid- and Toxic-Forming Materials

Acid- or toxic forming materials are not expected to be produced from the mine. CFC commits to monitor all materials produced and analyze them for acid- or toxic-forming materials. If any materials are identified, they will be placed in the refuse pile and covered with a minimum of 4 feet of non-acid, non-toxic, non-combustible materials. Copies of the toxicity/acid-base results from the samples collected at the Dugout Canyon Mine are presented in RA Attachment 5-4 and Appendix 5-7 of the approved M&RP.

731.400 Transfer of Wells

The three ground water monitoring wells, which exist at the site, will be abandoned following the reclamation of the site when no longer required for ground water monitoring. Therefore, no well transfers are required.

731.500 Discharges

No mines are located in the refuse pile area, thus no discharges to mines is possible.

731.600 Stream Buffer Zones

The refuse pile for the Dugout Canyon Mine will not be constructed within 100 feet of a perennial stream.

Stream Channel Diversions. No stream channel diversions are planned for this site.

Buffer Zone Designation. No buffer zone designation is necessary at this site.

731.700 Cross Sections and Maps

RA Plate 7-1 shows the location of each monitoring station and the watershed boundaries for the area watersheds. RA Plate 7-1 shows the proposed location of the diversion ditches and culverts and sediment pond associated with the refuse pile area. RA Plate 7-2 presents the design details of the sediment pond with appropriate cross sections of the pond and embankment.

731.800 Water Rights and Replacement

No surface or groundwater sources are located within the refuse pile area.

732 Sediment Control Measures

The sediment control measures within the refuse pile area have been designed to prevent additional contributions of sediment to stream flow or to runoff outside the permit area. In addition, they have been designed to meet applicable effluent limitations, and minimize erosion to the extent possible.

The structures to be used for the runoff-control plan for the permit area include disturbed and undisturbed area diversion channels, a sedimentation pond, berms, silt fences, and road diversions and culverts.

732.100 Siltation Structures

The siltation structure within the permit area ~~will be~~ is a sediment pond as described in Section 732.200. In addition to the sediment pond, a berm encircles the topsoil/subsoil stockpiles, providing treatment and total containment of the runoff from the stockpiles (RA Attachment 7-3).

~~The trapezoidal ditches within the berm are designated TD-1, TD-2 and TD-3 (RA Plate 7-1).~~ Typical cross sections of the ditches, berm and containment area are located in RA Attachment 7-4.

732.200 Sedimentation Ponds

There ~~will be~~ is a single sedimentation pond operating at the refuse pile site. The sedimentation pond topography and cross sections are presented on RA Plate 7-2 of this submittal. Details regarding sedimentation pond design are presented in Section 742.100 and RA Attachment 7-2. The sedimentation pond is defined as a Class A pond in accordance with TR-60 (U.S. Soil Conservation Service, 1976). A clean-out marker will be installed in the sediment pond.

The sedimentation pond is within the disturbed area boundary and is subject to final reclamation. The area is included in the calculation of the disturbed area subject to bonding and in the calculation of final reclamation costs.

Compliance Requirements. The sedimentation pond will be maintained until removal in accordance with the reclamation plan (see Section 540 of this submittal). When the pond is removed, the land will be revegetated in accordance with the reclamation plan defined in Section 540.

MSHA Requirements. MSHA requirements defined in 30 CFR 77.216 are not applicable since the sedimentation pond will not impound water or sediment to an elevation of 20 feet or more above the upstream toe of the structure. The pond will have a storage volume of less than 20 acre-feet.

732.300 Diversions

The objective of the runoff control plan is to isolate, to the maximum degree possible, runoff from disturbed areas from that of undisturbed areas. This is accomplished by routing runoff from the undisturbed slope above the refuse pile facilities via diversion berm/ditch UD-2 around the upstream side of the pile (see RA Plate 7-1). Disturbed area runoff will be collected by ~~four~~ five

diversion ditches and conveyed to the sediment pond. A brief list of each proposed diversion structure is as follows:

Diversion Ditches:

Undisturbed drainage ditches UD-1a,b and c ~~UD-2,~~ located on the north side of the pile, will collect runoff from the undisturbed watershed above of the pile. The runoff will be discharge into ~~ditch DD-5.~~ UC-1.

Disturbed drainage ditch DD-1 ~~will be~~ is located along the east side of the pile.

Disturbed drainage ditches DD-2a and b ~~will be~~ are ~~be~~ located on the west side of the pile.

~~Disturbed drainage ditch DD-3 will be located on the southwest side of the refuse pile and will connect ditches DD-1 and DD-2 to ditch DD-4.~~

Disturbed drainage ditches DD-3a and b ~~4~~ will connect ditches DD-1 and DD-2 to the sediment pond.

~~Disturbed drainage ditch DD-5 will be located on the north side of the access road. The runoff will be discharged into UC-~~1.

Diversion Culverts:

Culvert UC-1 will convey runoff from the county road borrow ditch under the pile access road. This runoff will ultimately discharge to the natural drainage under the county road.

Culvert UC-2 will be constructed only if the "topsoil stockpile" is relocated adjacent to the Dugout Canyon Road. UC-2 will convey water from the undisturbed drainage above the disturbed area, under the stockpile to the undisturbed drainage below the site (RA Table 7-4 and RA Attachment 7-4). Detailed diversion design is presented in Section 742.

732.400 Road Drainage

No permanent roads are to be built within the refuse pile area. Road drainage facilities will include diversion ditches and culverts. The road drainage diversion ditches and culverts for the refuse pile area are included in the list of diversions presented in Section 732.300 above. Additional road drainage design information is presented in Section 742.

All road drainage diversions will be maintained and repaired as needed. The culvert to be installed in the county road borrow ditch within the disturbed area is discussed in Section 742.300.

733 Impoundments

733.100 General Plans

There ~~will be~~ is a single sedimentation pond operating at the refuse pile facility as described in Section 732.200. The sedimentation pond ~~will be~~ is located in the southern portion of the disturbed area. The sedimentation pond topography and cross sections are presented on RA Plate 7-2 of this submittal. Detailed design information is presented in RA Attachment 7-2.

Certification. All maps and cross sections of the sedimentation pond have been prepared by or under the direction of, and certified by a qualified, registered, professional engineer.

Maps and Cross Sections. The topography and cross sections for the sedimentation pond are provided on RA Plate 7-2 of this submittal.

Narrative. A description of the sedimentation pond is presented in Sections 732.200 and 742 of this submittal.

Subsidence Survey Results. No underground coal mining will occur beneath the proposed sedimentation pond. Therefore, there will be no effects on the pond or pond embankment from subsidence.

Hydrologic Impact. The hydrologic and geologic information required to assess the hydrologic impacts of the proposed sedimentation pond are presented in Section 724 and Chapter 6 of this submittal and approved M&RP, respectively.

Design Plans and Construction Schedule. There are no additional structures proposed for the refuse pile area at this time. Any structures proposed in the future will not be constructed until the Division has approved the detailed design plan for the structure.

733.200 Permanent and Temporary Impoundments

Requirements. The sedimentation pond has been designed using current, prudent engineering practices. Specific foundation design and construction criteria are presented in Chapter 5 of this submittal. Specific hydrologic design criteria for the pond are presented in Section 743. The pond will be inspected regularly based on the schedule contained in Section 514.300.

Permanent Impoundments. There are no permanent impoundment structures proposed for use in mining and reclamation operations within the permit and adjacent areas.

Temporary Impoundments. The Division's authorization is being sought for the construction of the sedimentation pond as a temporary impoundment at the refuse pile area as part of coal mining and reclamation operations.

Hazard Notifications. The sedimentation pond will be examined for structural weakness and erosion in accordance with the schedule presented in Section 514.300. A report of these findings will be submitted to the Division as outlined in Section 514.300.

734 Discharge Structures

Discharge structures within the refuse pile area will consist of the emergency spillway on the sedimentation pond. All discharge structures will be constructed and maintained to comply with R645-301-744.

735 Disposal of Excess Spoil

There will be no excess spoil generated in the refuse pile area.

736 Coal Mine Waste

Coal mine waste generated by the Dugout Mine, will be stored and disposed of as described in Chapter 5 of this submittal.

737 Noncoal Mine Waste

Noncoal mine waste will be stored and disposed of as described in Chapter 5 of the approved M&RP.

738 Temporary Casing and Sealing of Wells

Each groundwater monitoring well identified on RA Plate 7-1 will be operated and maintained as described in Section 748.

740 DESIGN CRITERIA AND PLANS

741 General Requirements

This submittal includes site-specific plans that incorporate minimum design criteria for the control of drainage from disturbed and undisturbed areas.

742 Sediment Control Measures

742.100 General Requirements

Design. Sediment-control measures have been designed to provide the following:

Prevent additional contributions of sediment to stream flow or to runoff outside the permit area;

Meet the effluent limitations defined in Section 751 of this amendment; and

Minimize erosion to the extent possible.

Measures and Methods. The sediment control measures at the mine will include practices carried out within and adjacent to the disturbed area. Sediment control methods will include:

Retention of sediment within the disturbed area;

Diversion of upstream runoff away from the disturbed area; and

Provision of silt fences, riprap, contemporaneous revegetation, vegetative sediment filters, a sediment pond, and other measures that reduce overland flow velocities, reduce runoff volumes or trap sediment.

742.200 Siltation Structures

General Requirements. Additional contributions of suspended solids and sediment to stream flow or runoff outside the permit area will be prevented to the extent possible using a sedimentation pond. The pond will be constructed before refuse pile construction operations begin. A qualified registered professional engineer will certify pond construction.

Sedimentation Ponds. A single sedimentation pond has been designed for the refuse pile facilities. The sedimentation pond ~~will be~~ is located in the southern portion of the disturbed area. This pond will function as a single total containment pond with no planned discharge.

The location of the sedimentation pond is shown on RA Plate 7-1. The pond will not be located within a perennial stream channel.

Design, Construction, and Maintenance

~~Pond Description. Four drainage areas, identified on RA Plate 7-1, will contribute runoff to the sedimentation pond. The drainage areas contributing to the pond will be watersheds 1 through 4 and the pond area itself.~~ The entire area draining to the sedimentation pond has been defined as a single watershed (DWS-1). ~~Sediment Storage Volume.~~ The sedimentation pond has been designed to control sediment from areas which have been disturbed. The disturbed area contributing runoff to the sedimentation pond contains 15.60 acres. ~~from watersheds 1 through 4 (portions of which will be disturbed or contemporaneously reclaimed - see RA Attachment 7-2).~~ Refer to RA Plate 7-1 for a delineation of watershed boundaries and RA Attachment 7-2 for additional pond detail.

The sedimentation pond was designed to fully contain the sediment generated within the disturbed area. ~~Based on a sediment production rate of 0.05 acre-feet per acre disturbed,~~ The sedimentation pond has been designed with a sediment storage capacity of ~~0.78~~ 0.67 feet. The elevation of the maximum sediment level ~~will be~~ is 5897.55 ~~5895.9~~ feet. The 60% sediment clean-out volume of 0.40 ~~0.47~~ acre-feet ~~will be~~ is an elevation of 5896.5 ~~5899.7~~ feet.

Sediment Removal. Sediment removal from the sedimentation pond will occur when the sediment level reaches the 60% clean-out level. The sediment will be disposed in the refuse pile as discussed in Section 526.100 and 732.200 of this M&RP.

Design Event. As this is a total containment structure, the sedimentation pond has been designed to fully contain runoff resulting from the 100-year, 24-hour precipitation event (2.8 inches), instead of the 10-year, 24-hour event (1.65inches). This will provide a significant additional storage volume.

Detention Time. As this structure is planned to be a total containment pond, no decant structure will be part of the pond design. If collected water is to be removed from the structure, Division approval will be obtained and an adequate detention time will be provided in the water collected in the pond to allow the effluent to meet UPDES and 40 CFR Part 434 limitations.

Runoff Volume. The curve numbers used to determine the runoff volumes were based on professional judgment and soil and vegetation information presented in Chapters 2 and 3 of this submittal. The curve number for the pond area was assumed to be ~~91~~90 . ~~Refer to RA Table 7-1 for a list of all disturbed watershed areas contributing to the sedimentation pond and their associated curve numbers.~~

The storm runoff volume to the sedimentation pond resulting from the 100-year, 24-hour storm event was calculated to be 2.22 ~~2.45~~ acre-feet. The combined volume of the runoff from the 100-year, 24-hour storm event and the maximum sediment storage is 2.89 ~~3.23~~ ac-ft. ~~Based on the stage-capacity curve for the proposed sedimentation pond, the combined runoff and sediment storage volumes would have a stage elevation of 5900.8 feet. This would result in a freeboard depth of 1.20 feet and provide an additional storage volume of 1.12 acre-feet.~~ Calculations for pond sizing are contained in RA Attachment 7-2. ~~and summarized in RA Table 7-1.~~

As the pond ~~will be~~ is a total containment structure, no principal spillway or dewatering structure is included in the design. RA ~~Table~~ Attachment 7-2 presents the stage-capacity table for the pond.

An open-channel emergency spillway has been designed for the pond to allow discharge from the pond in the event that a series of greater than design events occur within a short period. Details regarding this emergency spillway are discussed in RA Attachment 7-2 ~~7-3~~. ~~As noted in that attachment, the emergency spillway was designed assuming that the pond is full. Under this scenario, the 100-year, 24-hour peak discharge from the pond will be 11.61cfs, with a peak stage elevation of 5902.52 feet (0.52 foot above the crest of the emergency spillway and 1.48 feet below the crest of the pond embankment). Hence, freeboard on the pond will be adequate.~~

The emergency spillway has been designed with a median riprap diameter of 6 inches within the crest section and 12 and 9 inches in the outslope sections of the spillway. This riprap ~~will be~~ was underlain with a geofabric liner. ~~The maximum velocity exiting from the emergency spillway under design conditions is anticipated to be 6.33 feet per second, which velocity is considered to be erosive of the downstream ephemeral channel. Therefore, an energy dissipation basin will be installed upstream of the entrance to the ephemeral channel. The basin will consist of a 25-foot~~

~~long basin with a bottom width of 6 feet sloping at 0.5 percent. The basin will be trapezoidal in shape and will allow the flow energy to dissipate prior to exiting the basin.~~ The expected velocity at the spillway ~~basin~~ outlet to the ephemeral channel will be 4.47 ~~2.2~~ feet per second, which velocity is not considered erosive. Calculations regarding the ~~energy dissipator~~ emergency spillway are presented in RA Attachment ~~7-3.~~ 7-2.

Dewatering Device. No dewatering device is planned for the pond. Runoff water collected will seep through the pond bottom, evaporate from the ponded water surface, and be used for dust suppression on the site area.

Short Circuiting. Short circuiting will not occur as the pond will be a total containment structure.

Excessive Settlement. The sedimentation pond is to be incised in native material. Therefore, it is not expected that embankment settlement will be a significant concern. Stability analyses presented in Chapter 5 indicate that the pond embankment will be stable under both normal and rapid drawdown conditions.

Embankment Material. During construction of the sedimentation pond, the inslope of the pond ~~will be~~ was shaped to provide a 2H:1V slope. Material to be used on the inslope ~~will be~~ was inspected to ensure the material is free of sod, large roots, and frozen soil.

Compaction. The sedimentation pond ~~will be~~ was incised in native materials. Any materials that are disturbed during the inslope reshaping will be compacted to a minimum dry density of 90% as determined by ASTM D1557.

MSHA Sedimentation Ponds. MSHA requirements defined in 30 CFR 77.216 are not applicable at this site since the proposed sedimentation pond will not impound water or sediment to an elevation of 20 feet or more above the upstream toe of the structure. The pond will also store a volume less than 20 acre-feet.

Other Treatment Facilities. There are no other treatment facilities within the mine permit area.

Exemptions. No exemptions are being proposed at this time.

742.300 Diversions

General Requirements. The diversions within the refuse pile area will consist of drainage ditches and culverts. All diversions within the site area have been designed to minimize adverse impacts to the hydrologic balance, to prevent material damage outside the permit area, and to assure the safety of the public.

All diversions and diversion structures have been designed and will be constructed, maintained and used to:

Be stable;

Provide protection against flooding and resultant damage to life and property;

Prevent, to the extent possible, additional contributions of suspended solids to stream flow outside the permit area; and

Comply with all applicable local, state, and federal laws and regulations.

All diversions within the refuse pile area will be removed when no longer needed. The diversions will be reclaimed in accordance with the reclamation plan defined in Chapter 5.

Peak discharge rates from the undisturbed and disturbed area drainages within the site area were calculated for use in designing diversion ditches and culverts. The storm runoff calculations for the temporary diversion structures were based on the 100-year, 6-hour precipitation event of 2.05 inches.

Curve numbers were based on professional judgment and information presented in Chapters 2 and 3 of this submittal. The curve numbers for the various watersheds are summarized in RA Attachment 7-4. ~~Table 7-1.~~

The drainage areas within and above the facilities area are presented on RA Plate 7-1. A summary of the characteristics of watersheds contributing to the diversions is presented in RA Attachment 7-4. ~~Table 7-1.~~

The size and location of each proposed diversion ditch and culvert will be verified in the field prior to initiating refuse pile construction. All proposed diversions are presented on RA Plate 7-1. The minimum capacity and freeboard of each diversion ditch and culvert was determined based on the minimum ditch slope. The maximum velocity and need for a channel lining or outlet protection was calculated based on the maximum ditch or culvert slope. Slopes were measured from a contour map with a scale of 1" = 100'. All diversion and culvert calculations are presented in RA Attachment 7-4 and summarized in RA Tables 7-3 and 7-4.

Diversion Berms. Diversion ditch DD-1 planned for this site will be an asymetrical ditch which will have a 10H:1V slope from the pile to the ditch bottom and a 2H:1V slope out of the ditch. The purpose of this ditch shape is to provide vehicle access to the pile outslope once the final configuration is reached, as well as a means of conveying the runoff from the pile. However, to meet MSHA requirements for safety concerns adjacent to slopes, a berm will need to be placed immediately adjacent to the ditch along the outslope. Since none of the berms have been designed specifically to convey runoff, no calculations concerning the hydraulic characteristics of these berms are provided.

An temporary interim berm will be constructed to divert water away from the below grade waste rock storage area. This will remain in place until the waste rock fill reaches the level of the surrounding ground and the construction of Ditches DD-1 and DD-2 is completed.

742.400 Road Drainage

No permanent roads are to be built in the refuse pile area. Runoff from the temporarily constructed road within the disturbed area will be treated by collection in the diversion ditches and sediment pond. The drainage ditches associated with the county road will be maintained during operations by placing a culvert under the refuse pile access road. Once the refuse pile is completed and reclaimed so that the road is no longer required for access, the drainage ditch along the county road will be restored by removing the culvert and reclaiming the road in accordance with Chapter 5 of this submittal. None of these roads are located in the channel of an intermittent or perennial stream. Control structures have been located to minimize downstream sedimentation and flooding. Diversion ditches and culverts for all roads are described in Section 732.300.

743 Impoundments

All pertinent information regarding the sedimentation pond is presented in Sections 732.200 and 742.200.

744 Discharge Structures

The discharge structure within the permit area ~~will be~~ is the emergency spillway on the sedimentation pond. The spillway on the sedimentation pond ~~will~~ has been designed to pass the 100-year, 6-hour storm event assuming that the pond was full. Therefore, the spillway will adequately pass the peak discharge from the 25-year, 6-hour precipitation event. Detailed information concerning the sedimentation pond is presented in Section 742.200.

745 Disposal of Excess Spoil

There will be no excess spoil generated within the refuse pile area.

746 Coal Mine Waste

746.100 General Requirements

All coal mine waste will be placed in a controlled manner to minimize adverse effects of leachate and surface water runoff on surface and groundwater quality and quantity. This waste will be placed in the refuse pile facility as described in Chapter 5 of this submittal.

746.200 Refuse Piles

A detailed description of the refuse pile is presented in Chapter 5 of this submittal.

746.300 Impounding Structures

No impounding structures within the refuse pile area will be constructed of coal mine waste or used to impound coal mine waste.

746.400 Return of Coal Processing Waste to Abandoned Underground Workings

No coal processing waste will be generated in the permit area.

747 Disposal of Noncoal Mine Waste

Disposal of noncoal mine waste is discussed in Chapter 5 of the approved M&RP.

748 Casing and Sealing of Wells

Each monitoring well has been cased, sealed, or otherwise managed, as approved by the Division, to prevent acid or other toxic drainage from entering ground or surface water, to minimize disturbance to the hydrologic balance, and to ensure the safety of people, livestock, fish and

wildlife, and machinery in the site and adjacent area. The drill logs and completion diagrams for the wells are contained in RA Attachment 6-1.

750 PERFORMANCE STANDARDS

All operations will be conducted to minimize disturbance to the hydrologic balance within the permit and adjacent areas, to prevent material damage to the hydrologic balance outside the permit area, and support approved post-mining land uses.

751 Water Quality Standards and Effluent Limitations

Discharges of water from disturbed areas will be in compliance with all Utah and federal water quality laws and regulations and with effluent limitations for coal mining contained in 40 CFR Part 434.

752 Sediment Control Measures

All sediment control measures will be located, maintained, constructed and reclaimed according to plans and designs presented in Sections 732, 742, and 760 of this submittal and the approved M&RP.

752.100 Siltation Structures and Diversions

Siltation structures and diversions will be located, maintained, constructed and reclaimed according to plans and designs presented in Sections 732, 742, and 763 of this submittal and the approved M&RP.

752.200 Road Drainage

Runoff from temporary roads will be treated through siltation structures which will be located, maintained, constructed and reclaimed according to plans and designs presented in Sections 732, 742, and 763 of this submittal and the approved M&RP.

753 Impoundments and Discharge Structures

Impoundments and discharge structures will be located, maintained, constructed and reclaimed as described in Sections 733, 734, 743, 745, and 760 of this M&RP.

754 Disposal of Excess Spoil, Coal Mine Waste and Noncoal Mine Waste

Disposal areas for coal mine waste and noncoal mine waste will be located, maintained, constructed and reclaimed as described in Sections 736, 737, 746, 747, 760 and Chapter 5 of this submittal and the approved M&RP.

755 Casing and Sealing of Wells

All wells will be managed as described in Sections 551, 748 and 765 of this submittal.

760 RECLAMATION

761 General Requirements

A detailed reclamation plan for the mine is presented in Section 540. In general, CFC will ensure that all temporary structures are removed and reclaimed. Other than for restoration of natural drainage patterns, no permanent diversions are included in the reclamation plan.

762 Roads

No roads will be retained after reclamation of the site.

762.100 Restoring the Natural Drainage Patterns

Natural drainages will be restored during reclamation of the refuse pile area by removing the sediment pond and diversion ditches. As presented in Chapter 5, the existing topography will be altered by the construction of the refuse pile. This alteration will not significantly alter the natural drainage pattern of the area. This is because the site is located on a topographic divide between two small ephemeral drainages. RA Plate 7-3 presents the reclaimed drainages.

Two channels will be installed as part of the final reclamation (see RA Plates ~~5-3~~ 5-2 and 7-3). Due to the proximity of the adjacent refuse, the channels will be designed to safely convey the peak flow resulting from the 100-year, 6-hour precipitation event. ~~Tables 7-1 and~~ Table 7-3 summarizes the ~~watershed characteristics and~~ reclaimed channel configurations~~, respectively~~.

Erosive velocity has been determined to be 5 feet per second based on alluvial silts and fine gravels expected in the area (Chow, V.T., 1959. Open Channel Flow. McGraw-Hill Book Company, New York, New York. Page 680). For channels RD-1 and RD-2, riprap will only be installed in the steeper channel sections. A typical riprap cross section is provided in RA Attachment 7-4.

The cross-sections for the reclamation channel were designed using the minimum channel slope, while riprap sizing was designed using the maximum channel slope. Reclamation slopes were estimated from the topographic contours provided in RA Plate 7-3. Thickness of the riprap layer will be a minimum of 12". Sand filter blankets will be installed beneath the riprap at a thickness equal to one-half the thickness of the riprap or 6 inches; whichever is greater.

~~RA TABLE 7-1~~

~~SUMMARY OF WATERSHED DATA~~

~~Watershed~~	~~Curve No.~~	~~Area (ac)~~	~~Time of Concentration (hr)~~	~~Peak Flow (cfs)~~
~~OPERATIONAL WATERSHEDS~~				
~~Disturbed Watersheds~~				
~~DWS-1~~	~~91~~	~~3.95~~	~~0.141~~	~~4.58~~
~~DWS-2~~	~~91~~	~~3.65~~	~~0.137~~	~~4.21~~
~~DWS-3~~	~~91~~	~~1.68~~	~~0.120~~	~~8.99~~
~~DWS-4~~	~~91~~	~~1.10~~	~~0.075~~	~~9.15~~
~~Sediment Pond~~				
~~100 Yr, 6 Hr~~	~~91~~	~~15.60~~	~~0.251~~	~~17.18~~
~~25Yr, 6 Hr~~	~~91~~	~~15.60~~	~~0.251~~	~~12.36~~
~~Undisturbed Watersheds~~				
~~UWS-1~~	~~75~~	~~29.86~~	~~0.302~~	~~7.29~~
~~UWS-2~~	~~75~~	~~16.18~~	~~0.889~~	~~2.59~~
~~RECLAMATION WATERSHEDS~~				
~~RWS-1~~	~~80~~	~~18.78~~	~~0.358~~	~~7.36~~
~~RWS-2~~	~~80~~	~~4.36~~	~~0.218~~	~~2.05~~

~~**RA TABLE 7-2**~~

~~**SUMMARY OF SEDIMENT POND DESIGN**~~

~~ELEVATION (ft)~~	~~AREA (ft^2)~~	~~AVERAGE AREA (ft^2)~~	~~CUMULATIVE VOLUME (ft^3)~~	~~CUMULATIVE VOLUME (ac-ft)~~
~~5892~~	~~6534~~			
		~~8712~~	~~17424~~	~~0.40~~
~~5894~~	~~10890~~			
		~~12632~~	~~42689~~	~~0.98~~
~~5896~~	~~14375~~			
		~~18078~~	~~78844~~	~~1.81~~
~~5898~~	~~21780~~			
		~~24830~~	~~128503~~	~~2.95~~
~~5900~~	~~27879~~			
		~~30928~~	~~190359~~	~~4.37~~
~~5902~~	~~33977~~			
		~~40947~~	~~272256~~	~~6.25~~
~~5904~~	~~47916~~			

RA TABLE 7-3

DIVERSION DESIGN SUMMARY

I.D. No.	Min. Bottom Width (ft)	Min. Channel Depth (ft)	Left Side Slope (xH:1V)	Right Side Slope (xH:1V)	Max. Flow Depth (ft)	Min. Slope (%)	Max. Slope (%)	Peak Flow (cfs)[a]	Req. Riprap D_{50} (ft)	Minimum Freeboard (ft)
OPERATIONAL DIVERSIONS										
DD-1	4.0	1.5	2.0	2.0	0.96	0.6	12.9	12.82	0.5*	0.54
DD-2a	15.0	1.0	2.0	2.0	0.22	1.9	10.0	8.02	None	0.78
DD-2b	4.0	1.0	2.0	2.0	0.41	5.0	13.5	8.02	0.5	0.59
DD-3a	15.0	1.0	2.0	2.0	0.37	1.3	3.5	16.03	None	0.63
DD-3b	2.0	1.5	2.0	2.0	1.03	1.3	9.0	16.03	0.5	0.47
UD-1a	1.0	1.0	2.0	2.0	0.27	2.0	15.0	0.71	None	0.73
UD-1b	2.0	1.5	2.0	2.0	0.87	0.3	2.8	4.74	None	0.63
UD-1c	2.0	1.0	2.0	2.0	0.5	4.4	23.3	4.74	0.5	0.5
RECLAMATION CHANNELS										
RD-1a	1.0	1.0	2.0	2.0	0.35	2.0	15.0	5.41	None	0.65
RD-1b	3.0	1.5	2.0	2.0	0.83	0.3	4.6	5.41	None	0.67
RD-1c	2.0	1.0	2.0	2.0	0.59	4.4	23.3	6.36	0.5	0.41
RD-2	1.0	1.0	2.0	2.0	0.37	1.0	14.3	0.71	None	0.63
RD-3	2.0	1.0	2.0	2.0	0.14	8.0	30.5	0.9	None	0.86
RD-4	1.0	1.0	2.0	2.0	0.19	2.8	6.1	0.41	None	0.81
RD-5	3.0	1.0	2.0	2.0	0.56	1.7	2.4	6.87	None	0.44
Swale 1	3.0	1.0	4.0	4.0	0.44	NA	NA	6.36	None	0.56

(a) Peak discharge resulting from the 100-year, 6-hour precipitation event.

* 6" only on slopes exceeding 4%.

RA TABLE 7-4
CULVERT DESIGN SUMMARY

Diversion Culvert	Minimum Diameter (in)	Culvert Material	Inlet Type	Culvert Slope (%)	Peak Flow (cfs) [(a)]	Outlet Velocity (fps)	Outlet Riprap D_{50} (in)
UC-1	24	CMP	Projecting	4.5	4.74	6.31	6
UC-2*	24	CMP	Projecting	1.5	6.78	4.66	None

(a) Peak discharge resulting from the 100-year, 6-hour precipitation event.

* Culvert UC-2 will be constructed only if the Topsoil Stockpile is relocated adjacent to the Dugout Canyon Road.

RA ATTACHMENT 7-2

SEDIMENT POND DESIGN CALCULATIONS

REGISTERED PROFESSIONAL ENGINEER
2-11-05
No. 189797
LAYNE D.
JENSEN
STATE OF UTAH

Ongont Canyon Mine Refuse Pile
Sedimentation Pond As-built Calculation

The entire area draining to the sedimentation pond has been defined as a single watershed (OWS-1). The entire watershed has been assumed to have a curve number of 90 (dirt road)

The runoff depth is controled by the curve number and precipitation event in the following equation.

$$Q = \frac{(P-0.2S)^2}{P+0.8S} \qquad S = \frac{1000}{CN} - 10 = 1.11$$

Assuming a 100-year 24-hour storm event $P = 2.8''$

$$Q = \frac{(2.8-0.2(1.11))^2}{2.8+0.8(1.11)} = 1.8''$$

Watershed Area = 644750 ft^2

Runoff Volume = $(644750)(1.8/12) = 96713\ ft^3 \Rightarrow 2.22$ Ac-ft

This pond has a single open channel spillway. (RA Plate 7-2)

Spillway elevation = 5902.5 ft
BW = 10'
Left SS = 4:1
Right SS = 3:1
Crest length = 10'

Capacity at the bottom of the spillway = 2.89 Ac-ft (pg 2+3)
Total sediment capacity = 0.67 Ac-ft (Elevation = 5897.55)
60% cleanout volume = 0.40 Ac-ft (Elevation = 5896.5)

The hydraulic efficiency was assessed using SEDCAD (Warner and Schwab, 1992)

Assuming a 100-year 6-hour storm event beginning with the pond full the peak discharge is 9.73 cfs with a peak stage of 5903.0. Thus, the maximum flow depth is 6"

Minimum embankment elevation = 5905.0
Minimum freeboard = 2.0 ft

SEDCAD calculations can be found on Pgs 4-9

Dugout Canyon Mine Refuse Pile Sediment Pond

Stage-Capacity Table

Elevation (ft)	Area* (ft^2)	Average Area (ft^2)	Contour Interval (ft)	Incremental Volume (ft^3)	Cummulative Volume (ft^3)	Cummulative Volume (ac-ft)
5894	114					
		2742	1	2742	2742	0.06
5895	5370					
		7697	1	7697	10439	0.24
5896	10024					
		11415.5	1	11415.5	21854.5	0.50
5897	12807					
		13792.5	1	13792.5	35647	0.82
5898	14778					
		15754	1	15754	51401	1.18
5899	16730					
		18099.5	1	18099.5	69500.5	1.60
5900	19469					
		20646	1	20646	90146.5	2.07
5901	21823					
		23068	1	23068	113214.5	2.60
5902	24313					
		25177	0.5	12588.5	125803	2.89
5902.5	26041					
		26964	0.5	13482	139285	3.20
5903	27887					
		30017	1	30017	169302	3.89
5904	32147					
		37227	1	37227	206529	4.74
5905	42307					

* Determined from the topography of the existing pond (See RA Plate 7-2).

Stage-Capacity Curve
Refuse Pile Sediment Pond

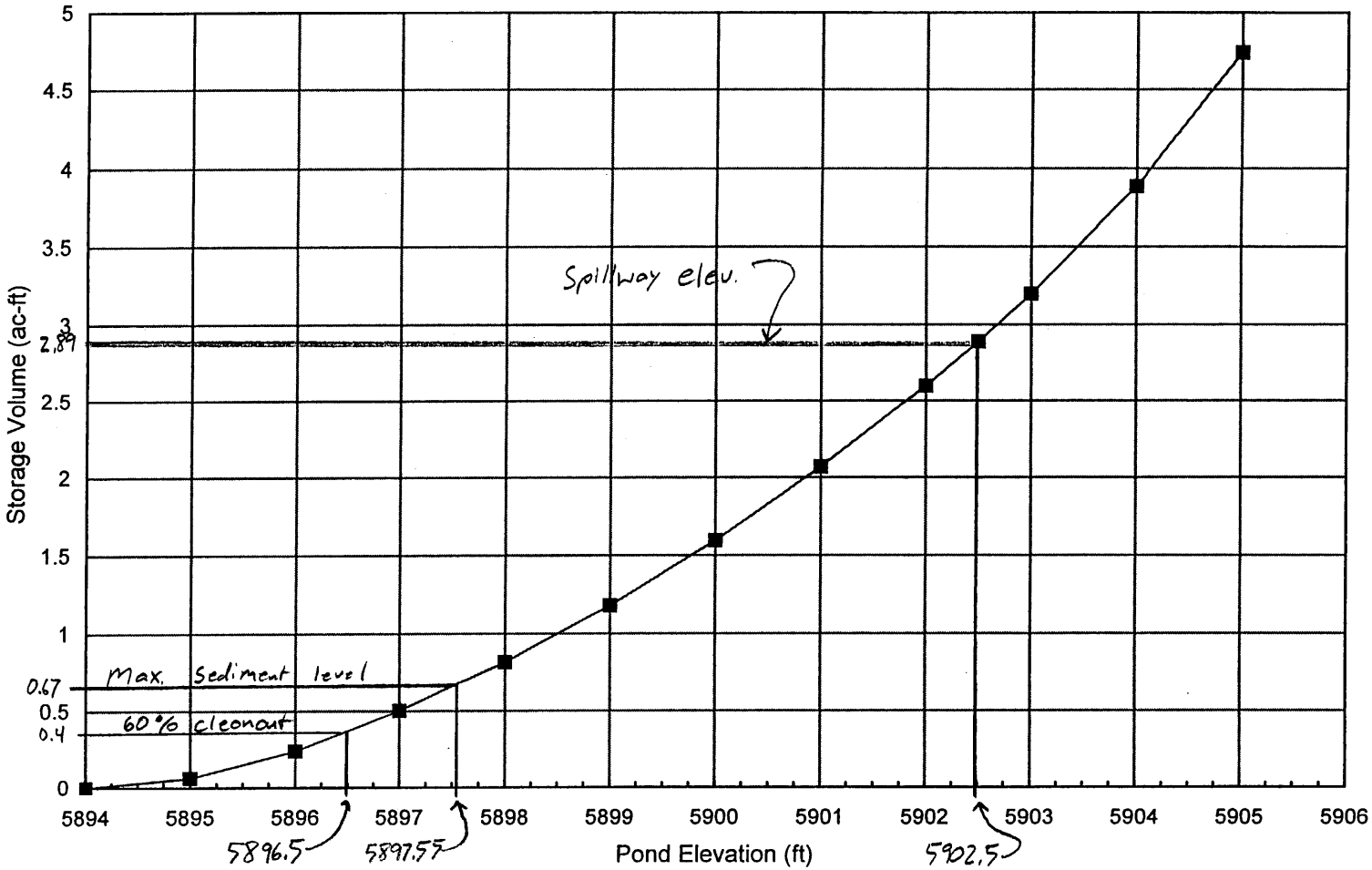

CIVIL SOFTWARE DESIGN

SEDCAD+ Version 3

DUGOUT REFUSE PILE SEDIMENT POND

by

Name: LDJ

Company Name: EarthFax Engineering INC.
File Name: G:\UC801\08\POND

Date: 01-31-2005

Civil Software Design -- SEDCAD+ Version 3.1
Copyright (C) 1987-1992. Pamela J. Schwab. All rights reserved.

Company Name: EarthFax Engineering INC.
Filename: G:\UC801\08\POND User: LDJ
Date: 01-31-2005 Time: 16:24:15
DUGOUT REFUSE PILE SEDIMENT POND
Storm: 2.05 inches, 100 year- 6 hour, SCS 6 Hour
Hydrograph Convolution Interval: 0.1 hr

SUBWATERSHED/STRUCTURE INPUT/OUTPUT TABLE

-Hydrology-

JBS	SWS	Area (ac)	CN	UHS	Tc (hrs)	K (hrs)	X	Base-Flow (cfs)	Runoff Volume (ac-ft)	Peak Discharge (cfs)
111	1	14.80	90	F	0.055	0.000	0.000	0.0	1.40	15.98
			Type: Pond		Label: POND					
111	Structure	14.80							1.40	
111	Total IN	14.80							1.40	15.98
111	Total OUT								1.40	9.73

Civil Software Design -- SEDCAD+ Version 3.1
Copyright (C) 1987-1992. Pamela J. Schwab. All rights reserved.

Company Name: EarthFax Engineering INC.
Filename: G:\UC801\08\POND User: LDJ
Date: 01-31-2005 Time: 16:24:15
DUGOUT REFUSE PILE SEDIMENT POND
Storm: 2.05 inches, 100 year- 6 hour, SCS 6 Hour
Hydrograph Convolution Interval: 0.1 hr

POND INPUT/OUTPUT TABLE

J1, B1, S1
POND

Drainage Area from J1, B1, S1, SWS(s)1: 14.8 acres
Total Contributing Drainage Area: 14.8 acres

DISCHARGE OPTIONS:

	Emergency Spillway
Riser Diameter (in)	----
Riser Height (ft)	----
Barrel Diameter (in)	----
Barrel Length (ft)	----
Barrel Slope (%)	----
Manning's n of Pipe	----
Spillway Elevation	----
Lowest Elevation of Holes	----
# of Holes/Elevation	----
Entrance Loss Coefficient	----
Tailwater Depth (ft)	----
Notch Angle (degrees)	----
Weir Width (ft)	----
Siphon Crest Elevation	----
Siphon Tube Diameter (in)	----
Siphon Tube Length (ft)	----
Manning's n of Siphon	----
Siphon Inlet Elevation	----
Siphon Outlet Elevation	----
Emergency Spillway Elevation	5902.5
Crest Length (ft)	10.0
Z:1 (Left and Right)	4 3
Bottom Width (ft)	10.0

POND RESULTS:

Permanent Pool (ac-ft)
2.9

	Runoff Volume (ac-ft)	Peak Discharge (cfs)
IN	1.40	15.98
OUT	1.40	9.73

Peak Elevation	Hydrograph Detention Time (hrs)
5903.0	0.00

****

Civil Software Design -- SEDCAD+ Version 3.1
Copyright (C) 1987-1992. Pamela J. Schwab. All rights reserved.

Company Name: EarthFax Engineering INC.
Filename: G:\UC801\08\POND User: LDJ
Date: 01-31-2005 Time: 16:24:15
DUGOUT REFUSE PILE SEDIMENT POND
Storm: 2.05 inches, 100 year- 6 hour, SCS 6 Hour
Hydrograph Convolution Interval: 0.1 hr

ELEVATION-DISCHARGE TABLE

J1, B1, S1
POND

Drainage Area from J1, B1, S1, SWS(s)1: 14.8 acres
Total Contributing Drainage Area: 14.8 acres

Elevation	Emergency Spillway (cfs)	Total Discharge (cfs)
5894.00	0.0	0.0
5894.50	0.0	0.0
5895.00	0.0	0.0
5895.50	0.0	0.0
5896.00	0.0	0.0
5896.50	0.0	0.0
5897.00	0.0	0.0
5897.50	0.0	0.0
5898.00	0.0	0.0
5898.50	0.0	0.0
5899.00	0.0	0.0
5899.50	0.0	0.0
5900.00	0.0	0.0
5900.50	0.0	0.0
5901.00	0.0	0.0
5901.50	0.0	0.0
5902.00	0.0	0.0
5902.50	0.0	0.0
5903.00	9.9	9.9
5903.10	11.8	11.8
5903.20	16.0	16.0
5903.30	20.6	20.6
5903.40	25.8	25.8
5903.50	30.9	30.9
5904.00	68.5	68.5
5904.50	118.4	118.4
5905.00	182.6	182.6

Civil Software Design -- SEDCAD+ Version 3.1
Copyright (C) 1987-1992. Pamela J. Schwab. All rights reserved.

Company Name: EarthFax Engineering INC.
Filename: G:\UC801\08\POND User: LDJ
Date: 01-31-2005 Time: 16:24:15
DUGOUT REFUSE PILE SEDIMENT POND
Storm: 2.05 inches, 100 year- 6 hour, SCS 6 Hour
Hydrograph Convolution Interval: 0.1 hr

==========
ELEVATION-AREA-CAPACITY-DISCHARGE TABLE
==========

J1, B1, S1
POND

Drainage Area from J1, B1, S1, SWS(s)1: 14.8 acres
Total Contributing Drainage Area: 14.8 acres

SW#1: Emergency Spillway

Elev	Stage (ft)	Area (ac)	Capacity (ac-ft)	Discharge (cfs)	
5894.00	0.00	0.00	0.00	0.00	
5894.50	0.50	0.04	0.01	0.00	
5895.00	1.00	0.12	0.05	0.00	
5895.50	1.50	0.17	0.12	0.00	
5896.00	2.00	0.23	0.22	0.00	
5896.50	2.50	0.26	0.34	0.00	
5897.00	3.00	0.29	0.48	0.00	
5897.50	3.50	0.32	0.64	0.00	
5898.00	4.00	0.34	0.80	0.00	
5898.50	4.50	0.36	0.97	0.00	
5899.00	5.00	0.38	1.16	0.00	
5899.50	5.50	0.41	1.36	0.00	
5900.00	6.00	0.45	1.58	0.00	
5900.50	6.50	0.47	1.81	0.00	
5901.00	7.00	0.50	2.05	0.00	
5901.50	7.50	0.53	2.31	0.00	
5902.00	8.00	0.56	2.58	0.00	
5902.50	8.50	0.60	2.87	0.00	Stage of SW#1
5902.99	8.99	0.60	3.17	9.73	Peak Stage
5903.00	9.00	0.64	3.18	9.85	
5903.10	9.10	0.65	3.24	11.83	
5903.20	9.20	0.66	3.31	15.96	
5903.30	9.30	0.67	3.37	20.62	
5903.40	9.40	0.68	3.44	25.78	
5903.50	9.50	0.69	3.51	30.87	
5904.00	10.00	0.74	3.87	68.51	
5904.50	10.50	0.85	4.26	118.41	
5905.00	11.00	0.97	4.72	182.55	

****

As-built spillway verification:

The channel dimensions vary throughout the length of the spillway. The minimum channel dimensions will be assumed.

$BW = 9'$
$SS = 1.75:1$
$Depth = 18''$
$D_{50} = 6''$

minimum slope = 5.03 %

Maximum slope = 30.4 %

To make the verification more conservative a peak flow equal to the peak inflow will be used instead of the calculated discharge rate

$Q = 15.98$ cfs

Maximum velocity = 6.54 ft/s. (pg 11)
6" riprap on a 1.75:1 slope can handle a velocity upto 7.0 fps.

Maximum Depth = 0.39 ft (pg 12)
Minimum Freeboard = 1.11 ft

References

Abt, S.R., Khattak, M.S., Nelson, J.D., Ruff, J.F., Shaikh, A., Wittler, R.J., Lee, D.W., and Hinkle, N.E. 1987. Development of Riprap Design Criteria by riprap testing in flumes: Phase I U.S. Nuclear Regulatory Commission. Washington D.C.

Searcy, J.K., 1967. Use of Riprap for bank protection. U.S. Dept. of Transportation, Bureau of Public Roads. U.S. Government Printing office. Washington D.C.

Warner, R.C. and Schwab P.J., 1992 SEDCAD Version 3.0 Civil Software Design.

Emergency Spillway Max. Slope
Worksheet for Trapezoidal Channel

Project Description	
Worksheet	REFUSE PILE POND
Flow Element	Trapezoidal Channel
Method	Manning's Formula
Solve For	Channel Depth

Input Data		
Mannings Coeffic	0.050	$D_{50} = 6''$ Slope = 30.4 %
Slope	304000	ft/ft
Left Side Slope	1.75	V : H
Right Side Slope	1.75	V : H
Bottom Width	9.00	ft
Discharge	15.95	cfs

Results		
Depth	0.27	ft
Flow Area	2.4	ft²
Wetted Perim	9.61	ft
Top Width	9.30	ft
Critical Depth	0.46	ft
Critical Slope	0.051755	ft/ft
Velocity	6.54	ft/s < 7.0 fps ∴ ok
Velocity Head	0.66	ft
Specific Energ	0.93	ft
Froude Numb	2.25	
Flow Type	Supercritical	

© Haestad Methods, Inc.
EarthFax Engineering Inc
37 Brookside Road Waterbury, CT 06708 USA (203) 755-1666

Emergency Spillway Min. Slope
Worksheet for Trapezoidal Channel

Project Description	
Worksheet	REFUSE PILE PONC
Flow Element	Trapezoidal Channel
Method	Manning's Formula
Solve For	Channel Depth

Input Data		
Mannings Coeffic	0.038	$D_{50} = 6''$ Slope = 5%
Slope	050000	ft/ft
Left Side Slope	1.75	V : H
Right Side Slope	1.75	V : H
Bottom Width	9.00	ft
Discharge	15.95	cfs

Results		
Depth	0.39	ft << 1.5 ft min. freeboard = 1.11 ft
Flow Area	3.6	ft²
Wetted Perim	9.89	ft
Top Width	9.44	ft
Critical Depth	0.46	ft
Critical Slope	0.029189	ft/ft
Velocity	4.47	ft/s
Velocity Head	0.31	ft
Specific Energ	0.70	ft
Froude Numb	1.28	
Flow Type	Supercritical	

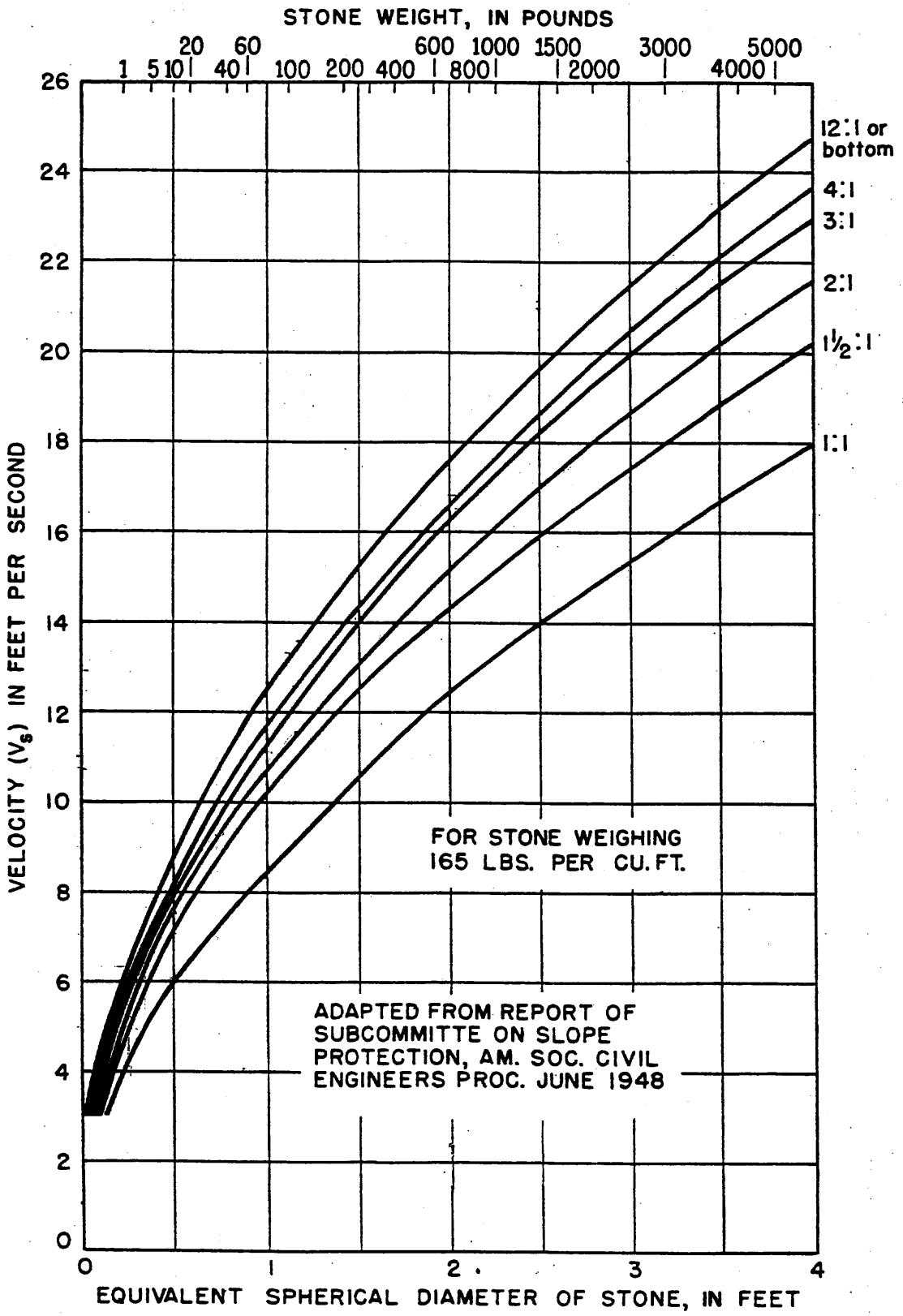

FIG. 2-SIZE OF STONE THAT WILL RESIST DISPLACEMENT FOR VARIOUS VELOCITIES AND SIDE SLOPES

Searcy, J.K. 1967. Use of Riprap for Bank Protection. U.S. Dept. of Transportation, Bureau of Public Roads, U.S Government Printing Office, Washington D.C.

RA ATTACHMENT 7-3

TOPSOIL/SUBSOIL STOCKPILE SEDIMENT CONTROL

RA ATTACHMENT 7-3

TOPSOIL/SUBSOIL STOCKPILE SEDIMENT CONTROL

REGISTERED PROFESSIONAL ENGINEER
No. 139797
LAYNE D.
JENSEN
STATE OF UTAH

Topsoil Stockpile Sediment Control

A berm will be placed around the entire topsoil stockpile to contain all runoff from the topsoil stockpile. The berm has been designed to completely contain the 10-yr 24-hour storm event with a spillway through a silt fence to handle a larger event.

Rainfall depth = 1.95 in (10-yr 24-hr)

Although the topsoil pile will be gouged and reseeded a bare earth condition will be assumed with a hydrologic soil group of B

CN = 82 (dirt road)

$$\text{Runoff depth} = \frac{(P-0.2S)^2}{P+0.8S}$$

$$S = 1000/CN - 10 = \frac{1000}{82} - 10 = 2.2$$

$$\text{Runoff depth} = \frac{(1.95-(0.2)(2.2))^2}{1.95+0.8(2.2)} = 0.61 \text{ inch}$$

Topsoil stockpile Area = 31,148 ft^2

Total runoff = $\left(\frac{0.61}{12}\right)(31{,}148\ ft^2) = 1595\ ft^3$

Runoff will be split roughly equally between a north and south containment area.

North containment

Containment Area = (2)(5.75) + (2)(4) = 19.5 ft^2

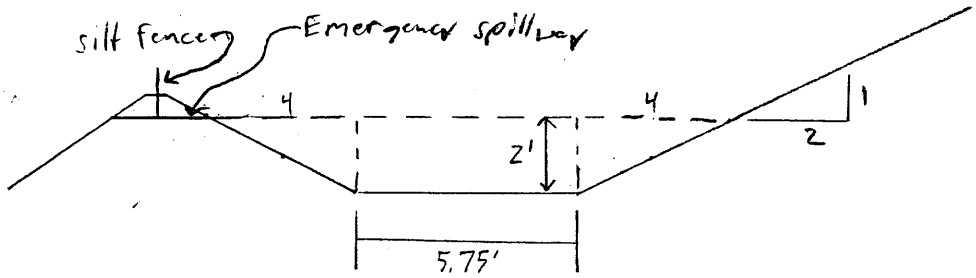

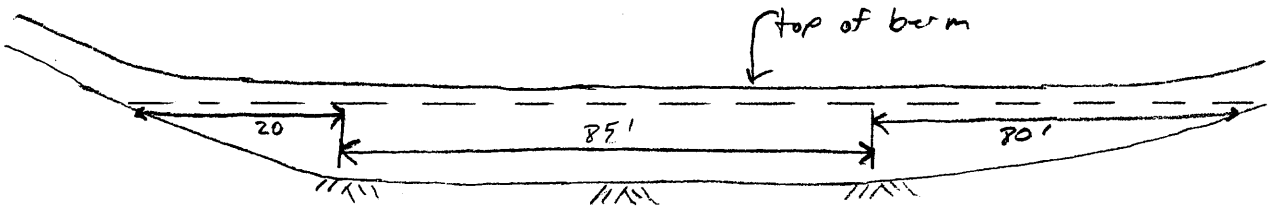

space between berm and pile is only 2.5' here reduce vol. by 2/3

$$Vol = (19.5\,ft^2)(85') + \tfrac{1}{2}(19.5)(20) + (\tfrac{1}{2})(\tfrac{1}{3})(19.5)(80)$$

$$= 1657.5 + 195 + 234 = 2086.5\ ft^3$$

This side of the containment can hold the entire storm event with 491.5 ft^3 to spare.

<u>South containment</u>

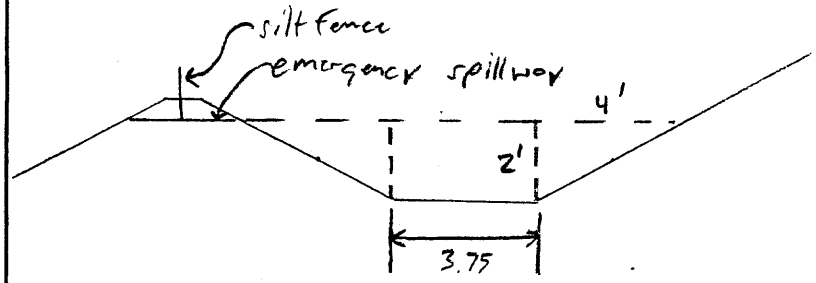

Containment area $= (2)(3.75) + (2)(4) = 15.5\ ft^2$

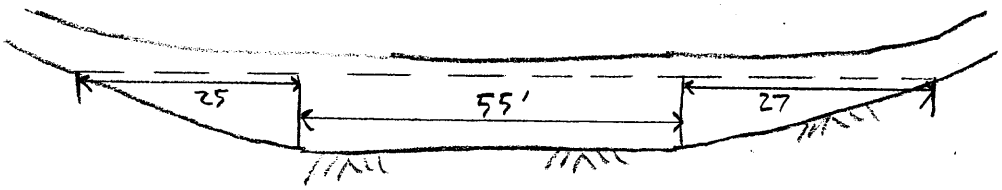

Containment vol. $= (55)(15.5') + \tfrac{1}{3}(25)(15.5) + \tfrac{1}{3}(27)(15.5) = 1121.0\ ft^3$

This side of the containment can handle well over half of the total runoff.

EARTHFAX ENGINEERING, INC.
ENGINEERS / SCIENTISTS

PROJECT UC 801-08 PAGE ____ OF ____
COMPUTED LOJ DATE 2-3-05
CHECKED ____ DATE ____

Subsoil Stockpile Sediment Control

Sediment control for the subsoil stockpile will be configured the same as for the topsoil stockpile. However, the subsoil will shed a greater percentage of the precipitation.

Assume hydrologic soil group C

$$CN = 87 \quad \text{(Dirt road)}$$

$$S = \frac{1000}{87} - 10 = 1.49$$

$$\text{Runoff depth} = \frac{(1.95 - 0.2(1.49))^2}{1.95 + 0.8(1.49)} = 0.87 \text{ in}$$

Stockpile Area = 43564 ft^2

$$\text{Runoff volume} = \frac{0.87}{12}(43564 ft^2) = 3158.4 \ ft^3$$

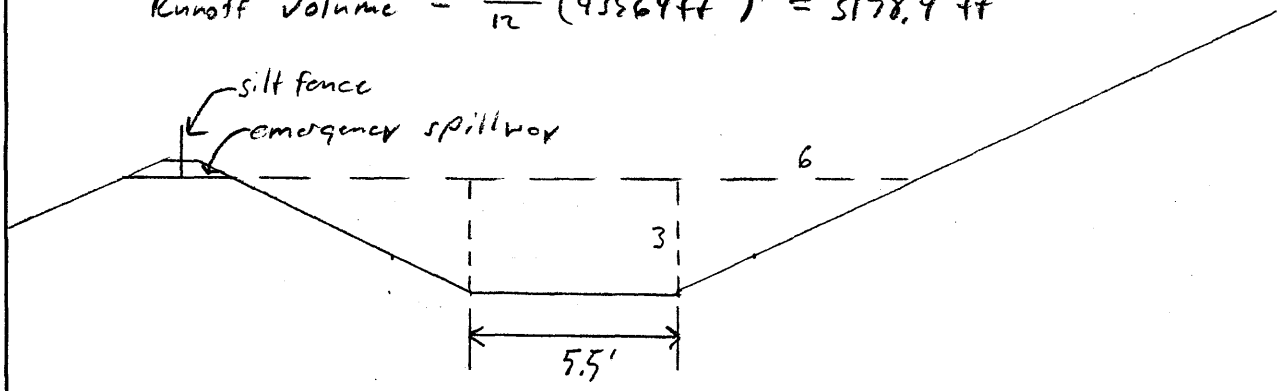

$$\text{Containment Area} = (5.5)(3) + (3)(6) = 34 ft^2$$

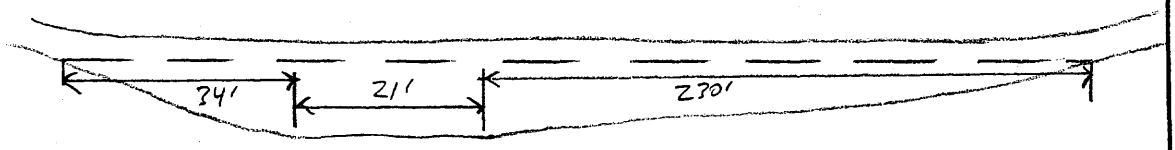

$$\text{Containment vol} = (21)(34) + \tfrac{1}{2}(34)(34) + \tfrac{1}{3}(230)(34) = 3899 \ ft^3$$

$3899 > 3158.4 \quad \therefore$ Adequate containment

RA ATTACHMENT 7-4

DIVERSION AND CULVERT DESIGN CALCULATIONS

REGISTERED PROFESSIONAL ENGINEER
2-11-05
No. 189797
LAYNE D.
JENSEN
STATE OF UTAH

Dugout Canyon Mine Refuse Pile
Hydrology Calculations

Rainfall Depths

Since this site is a refuse pile the 100-year storm event will be used for all calculations

100-year 6-hour	2.05 inches
100-year 24-hour	2.80 inches

Curve Number

This area was a gravel pit prior to being used as a refuse pile. Thus, the vast majority of the disturbed areas have no vegetation and little if any soil remaining. The entire site whether covered with waste rock or bare soil will behave like a dirt road. The typical curve number for dirt roads is 90.

The undisturbed portions of any watersheds are typically Pinyon/Juniper or Sagebrush/Grass vegetation type. The majority being Pinyon/Juniper. Undisturbed soils in the undisturbed watersheds have a hydrologic soil of B. Combining the vegetation type and hydrologic soil type the estimated curve number is 75.

Soil from the site and a borrow area will be used to reclaim the site. Although the native soils justify a lower curve number the uncertainty regarding the soil borrow source justifies a conservative choice of 80 for the reclaimed areas.

A summary of watershed characteristics can be found on the following pages.

Drainage Ditch Design

Assumptions

1. All ditches designed for the 100-yr 6-hr storm event,

2. When riprap is required the method presented by Searcy, (1967) will be used,

3. Riprap thickness is twice the D_{50},

4. A Mannings n of 0.03 will be assumed for bare earth,

5. A Mannings n of 0.035 will be assumed for rocky earth,

6. A Mannings n for riprap channels will be determined using the method presented by Abt, S.R., et. al. (1987)

$$n = 0.0456(D_{50} \times \text{Slope})^{0.159}$$

Where: D50 = median riprap size (inches)
Slope = (ft\ft)

7. A geotextile will be used beneath riprap for operational ditches,

8. A filter blanket will be used beneath the riprap for all reclamation channels. The filter thickness will be half of the riprap thickness.

Operational Ditches and Culvert

UD-1a

Contributing Watershed is Approximately 15% of UWS-1

Peak Flow = 4.74 x 0.15 = 0.71 cfs

Minimum Slope = 2.0%
Maximum Slope = 15.0%

Trapizoidal Ditch
Side slopes = 2:1
Depth = 1 ft
Bottom Width = 1 ft
Riprap = none

Maximum Velocity = 4.59 fps
Maximum Depth = 0.27 ft
Freeboard = 0.73 ft

See pages 22 and 23 for calculation sheets and page 56 for a typical cross-section of the ditch

UD-1b

Contributing Watershed is UWS-1

Peak Flow = 4.74 cfs

Minimum Slope = 0.3%
Maximum Slope = 2.8%

Trapizoidal Ditch
Side slopes = 2:1
Depth = 1.5 ft
Bottom Width = 2 ft
Riprap = none

Maximum Velocity = 3.92 fps
Maximum Depth = 0.87 ft
Freeboard = 0.63 ft

See pages 24 and 25 for calculation sheets and page 57 for a typical cross-section of the ditch

UD-1c

Contributing Watershed is UWS-1

Peak Flow = 4.74 cfs
Minimum Slope = 4.4%
Maximum Slope = 23.3%

Trapizoidal Ditch
Side slopes = 2:1
Depth = 1.0 ft
Bottom Width = 2.0 ft
Riprap = 6 inch

Maximum Velocity = 6.26 fps
Maximum Depth = 0.5 ft
Freeboard = 0.5 ft

See pages 26 and 27 for calculation sheets and page 58 for a typical cross-section of the ditch

A single watershed has been defined for the area draining to the sediment pond. Since the refuse pile may slope in different directions during construction ditches DD-1 and DD-2 may receive most of the runoff. Thus, both ditches will be designed to handle the majority of the runoff from the upper part of the watershed.

DD-1

Contributing Watershed is Approximately 80% of DWS-1

Peak Flow = 16.03 x 0.8 = 12.82 cfs
Minimum Slope = 0.6%
Maximum Slope = 12.9%

Trapizoidal Ditch
Side slopes = 2:1
Depth = 1.5 ft
Bottom Width = 4 ft
Riprap = 6 inch on slopes exceeding a slope of 4%. A few places have short areas with slopes exceeding 4%, these areas will need to be riprapped.

Maximum Velocity = 6.22 fps
Maximum Depth = 0.96 ft
Freeboard = 0.54 ft

See pages 28, 29, and 30 for calc sheets and page 59 and 60 for a typ. cross-section of the ditch

DD-2a

Contributing Watershed is Approximately 50% of DWS-1

Peak Flow = 16.03 x 0.5 = 8.02 cfs

Minimum Slope = 1.9%
Maximum Slope = 10.0%

Trapizoidal Ditch
Side slopes = 2:1
Depth = 1 ft
Bottom Width = 15 ft
Riprap = none

Maximum Velocity = 4.03 fps
Maximum Depth = 0.22 ft
Freeboard = 0.78 ft

See pages 31 and 32 for calculation sheets and page 61 for a typical cross-section of the ditch

DD-2b

Contributing Watershed is Approximately 50% of DWS-1

Peak Flow = 16.03 x 0.5 = 8.02 cfs

Minimum Slope = 5.0%
Maximum Slope = 13.5%

Trapizoidal Ditch
Side slopes = 2:1
Depth = 1 ft
Bottom Width = 4 ft
Riprap = 6 inch

Maximum Velocity = 5.57 fps
Maximum Depth = 0.41 ft
Freeboard = 0.59 ft

See pages 33 and 34 for calculation sheets and page 62 for a typical cross-section of the ditch

DD-3a

Contributing Watershed is DWS-1

Peak Flow = 16.03 x 1.0 = 16.03 cfs

Minimum Slope = 1.3%
Maximum Slope = 3.5%

Trapizoidal Ditch
Side slopes = 2:1
Depth = 1.0 ft
Bottom Width = 15.0 ft
Riprap = none

Maximum Velocity = 3.84 fps
Maximum Depth = 0.37 ft
Freeboard = 0.63 ft

See pages 35 and 36 for calculation sheets and page 63 for a typical cross-section of the ditch

DD-3b

Contributing Watershed is DWS-1

Peak Flow = 16.03 x 1.0 = 16.03 cfs

Minimum Slope = 1.3%
Maximum Slope = 9.0%

Trapizoidal Ditch
Side slopes = 2:1
Depth = 1.5 ft
Bottom Width = 2.0 ft
Riprap = 6 inch

Maximum Velocity = 7.28 fps
Maximum Depth = 1.03 ft
Freeboard = 0.47 ft

See pages 37 and 38 for calculation sheets and page 64 for a typical cross-section of the ditch

Culvert

UC-1

Culvert Diameter = 24 inches

Contributing Watershed = UWS-1

Peak Flow = 4.74 cfs

Culvert Slope = 4.5 %

Culvert inlet capacity = 11.9 cfs (projecting inlet)

Culvert capacity based on culvert slope = 26.11 cfs

Culvert capacity is controlled by the inlet. However, the inlet capacity is still over twice the peak flow from the 100-year 6-hour.

Outlet velocity = 6.31 fps thus outlet protection is needed (pg 39)

Place D_{50} = 6 inch riprap at the outlet for outlet protection

UC-2

Culvert Diameter = 24 inches

Contributing Watershed = UWS-2

Peak Flow = 6.78 cfs

Culvert Slope = 1.5 %

Culvert inlet capacity = 11.9 cfs (projecting inlet)

Culvert capacity based on culvert slope = 15.01 cfs

Culvert capacity is controlled by the inlet. However, the inlet capacity is still over twice the peak flow from the 100-year 6-hour.

Outlet velocity = 4.66 fps thus outlet protection is not needed (pg 40)

RECLAMATION CHANNELS

RD-1a

Contributing Watershed is Approximately 15% of RWS-1

Peak Flow = 6.36 x 0.15 = 5.41 cfs

Minimum Slope = 2.0%
Maximum Slope = 15.0%

Trapizoidal Ditch
Side slopes = 2:1
Depth = 1 ft
Bottom Width = 1 ft
Riprap = none

Maximum Velocity = 4.56 fps
Maximum Depth = 0.35 ft
Freeboard = 0.65 ft

See pages 41 and 42 for calculation sheets and page 65 for a typical cross-section of the ditch

RD-1b

Contributing Watershed is 85% of RWS-1

Peak Flow = 6.36 x 0.85 = 5.41 cfs

Minimum Slope = 0.3%
Maximum Slope = 4.6%

Trapizoidal Ditch
Side slopes = 2:1
Depth = 1.5 ft
Bottom Width = 3 ft
Riprap = none

Maximum Velocity = 4.75 fps
Maximum Depth = 0.83 ft
Freeboard = 0.67 ft

See pages 43 and 44 for calculation sheets and page 66 for a typical cross-section of the ditch

RD-1c

Contributing Watershed is RWS-1

Peak Flow = 6.36 cfs
Minimum Slope = 4.4%
Maximum Slope = 23.3%

Trapizoidal Ditch
Side slopes = 2:1
Depth = 1.0 ft
Bottom Width = 2.0 ft
Riprap = 6 inch

Maximum Velocity = 6.90 fps
Maximum Depth = 0.59 ft
Freeboard = 0.41 ft

See pages 45 and 46 for calculation sheets and page 67 for a typical cross-section of the ditch

RD-2

Contributing Watershed is RWS-2

Peak Flow = 0.71 cfs
Minimum Slope = 1.0%
Maximum Slope = 14.3%

Trapizoidal Ditch
Side slopes = 2:1
Depth = 1.0 ft
Bottom Width = 1 ft
Riprap = none

Maximum Velocity = 4.08 fps
Maximum Depth = 0.37 ft
Freeboard = 0.63 ft

See pages 47 and 48 for calculation sheets and page 68 for a typical cross-section of the ditch

RD-3

Contributing Watershed is RWS-3

Peak Flow = 0.9 cfs
Minimum Slope = 8.0%
Maximum Slope = 30.5%

Trapizoidal Ditch
Side slopes = 2:1
Depth = 1.0 ft
Bottom Width = 2.0 ft
Riprap = none

Maximum Velocity = 4.63 fps
Maximum Depth = 0.14 ft
Freeboard = 0.86 ft

See pages 49 and 50 for calculation sheets and page 69 for a typical cross-section of the ditch

RD-4

Contributing Watershed is RWS-4

Peak Flow = 0.41 cfs
Minimum Slope = 2.8%
Maximum Slope = 6.1%

Trapizoidal Ditch
Side slopes = 2:1
Depth = 1.0 ft
Bottom Width = 1.0 ft
Riprap = none

Maximum Velocity = 2.56 fps
Maximum Depth = 0.19 ft
Freeboard = 0.81 ft

See pages 51 and 52 for calculation sheets and page 70 for a typical cross-section of the ditch

RD-5

Contributing Watershed is RWS-5

Peak Flow = 6.87 cfs
Minimum Slope = 1.7 %
Maximum Slope = 2.4 %

Trapizoidal Ditch
Side slopes = 2:1
Depth = 1.0 ft
Bottom Width = 3.0 ft
Riprap = none

Maximum Velocity = 4.16 fps
Maximum Depth = 0.56 ft
Freeboard = 0.44 ft

See pages 53 and 54 for calculation sheets and page 71 for a typical cross-section of the ditch

Swale 1

Contributing Watershed is RWS-1

Peak Flow = 6.36 cfs
Slope = 3.6%

Trapizoidal Ditch
Side slopes = 4:1
Depth = 1.0 ft
Bottom Width = 3.0 ft
Riprap = none

Maximum Velocity = 4.66 fps
Maximum Depth = 0.44 ft
Freeboard = 0.56 ft

See page 55 for calculation sheets and page 72 for a typical cross-section of the ditch

Summary of Watershed Data

Watershed Area	Drainage Area (ac)	Curve Number	S (in)	Y (%)	l (ft)	L (hr)	Time of Conc. (hr)	Peak Flow (cfs)
Operational Watersheds								
DWS-1	14.8	90	1.111	25.5	700	0.033	0.055	16.03
UWS-1	18	75	3.333	11	1500	0.154	0.257	4.74
UWS-2	25.5	75	3.333	18.4	1975	0.148	0.248	6.78
Reclamation Watersheds								
RWS-1	20.6	76	3.158	13.2	1500	0.136	0.228	6.36
RWS-2	1.2	80	2.500	27.2	250	0.020	0.034	0.71
RWS-3	1.6	80	2.500	22	570	0.043	0.072	0.9
RWS-4	0.7	80	2.500	17.1	200	0.021	0.035	0.41
RWS-5	26.1	75	3.333	18.4	2060	0.153	0.256	6.87

Notes

Watershed locations can be found on Plates RA7-1 and RA7-3
S = 1000/CN - 10
Y = average watershed slope = (length of contour lines)(contour interval)/(watershed area)
l = hydraulic length
L = watershed lag =(l^0.8(S+1)^0.7) / (1900(Y)^0.5)
Time of Concentration + 1.67L
Peak Flow is based on a 100-yr 6-hr storm event

Triangular Hydrograph Calculations using

SCSHYDRO Program

Watershed I.D.:
DWS-1 100-yr 6-hr

INPUT SUMMARY

STORM :	WATERSHED :
Dist.= SCS Type `b'	Area = 14.80 acres
Depth = 2.05 inches	CN = 90.00
Duration = 6.0 hrs	Time conc.= 0.06 hrs

OUTPUT SUMMARY

Runoff depth: 1.137 inches
Initial abstr: 0.222 inches
Peak flow: 16.03 cfs (1.074 iph)
at time: 2.508 hrs

Triangular Hydrograph Calculations using

SCSHYDRO Program

Watershed I.D.:
UWS-1 100-yr 6-hr

INPUT SUMMARY

STORM :	WATERSHED :
Dist.= SCS Type `b'	Area = 18.00 acres
Depth = 2.05 inches	CN = 75.00
Duration = 6.0 hrs	Time conc.= 0.26 hrs

OUTPUT SUMMARY

Runoff depth: 0.406 inches
Initial abstr: 0.667 inches
Peak flow: 4.74 cfs (0.261 iph)
at time: 2.639 hrs

Triangular Hydrograph Calculations using

SCSHYDRO Program

Watershed I.D.:
UWS-2

INPUT SUMMARY

STORM :	WATERSHED :
Dist.= SCS Type `b'	Area = 25.50 acres
Depth = 2.05 inches	CN = 75.00
Duration = 6.0 hrs	Time conc.= 0.25 hrs

OUTPUT SUMMARY

Runoff depth: 0.406 inches
Initial abstr: 0.667 inches
Peak flow: 6.78 cfs (0.264 iph)
at time: 2.612 hrs

Triangular Hydrograph Calculations using

SCSHYDRO Program

Watershed I.D.:
RWS-1 100-yr 6-hr

INPUT SUMMARY

STORM :	WATERSHED :
Dist.= SCS Type `b'	Area = 20.60 acres
Depth = 2.05 inches	CN = 76.00
Duration = 6.0 hrs	Time conc.= 0.23 hrs

OUTPUT SUMMARY

Runoff depth: 0.440 inches
Initial abstr: 0.632 inches
Peak flow: 6.36 cfs (0.306 iph)
at time: 2.614 hrs

Triangular Hydrograph Calculations using

SCSHYDRO Program

Watershed I.D.:
RWS-2 100-yr 6-hr

INPUT SUMMARY

STORM :	WATERSHED :
Dist.= SCS Type `b'	Area = 1.20 acres
Depth = 2.05 inches	CN = 80.00
Duration = 6.0 hrs	Time conc.= 0.03 hrs

OUTPUT SUMMARY

Runoff depth: 0.593 inches
Initial abstr: 0.500 inches
Peak flow: 0.71 cfs (0.585 iph)
at time: 2.502 hrs

Triangular Hydrograph Calculations using

SCSHYDRO Program

Watershed I.D.:
RWS-3 100-yr 6-hr

INPUT SUMMARY

STORM :	WATERSHED :
Dist.= SCS Type `b'	Area = 1.60 acres
Depth = 2.05 inches	CN = 80.00
Duration = 6.0 hrs	Time conc.= 0.07 hrs

OUTPUT SUMMARY

Runoff depth: 0.593 inches
Initial abstr: 0.500 inches
Peak flow: 0.90 cfs (0.558 iph)
at time: 2.515 hrs

Triangular Hydrograph Calculations using

SCSHYDRO Program

Watershed I.D.:
RWS-4 100-yr 6-hr

INPUT SUMMARY

STORM :	WATERSHED :
Dist.= SCS Type `b'	Area = 0.70 acres
Depth = 2.05 inches	CN = 80.00
Duration = 6.0 hrs	Time conc.= 0.04 hrs

OUTPUT SUMMARY

Runoff depth: 0.593 inches
Initial abstr: 0.500 inches
Peak flow: 0.41 cfs (0.584 iph)
at time: 2.506 hrs

Page Intentionally Left Blank

Triangular Hydrograph Calculations using

SCSHYDRO Program

Watershed I.D.:
RWS-5

INPUT SUMMARY

STORM :	WATERSHED :
Dist.= SCS Type `b'	Area = 26.10 acres
Depth = 2.05 inches	CN = 75.00
Duration = 6.0 hrs	Time conc.= 0.26 hrs

OUTPUT SUMMARY

Runoff depth: 0.406 inches
Initial abstr: 0.667 inches
Peak flow: 6.87 cfs (0.261 iph)
at time: 2.628 hrs

UD-1a Minimum Slope
Worksheet for Trapezoidal Channel

Project Description	
Worksheet	Dugout Refuse I
Flow Element	Trapezoidal Cha
Method	Manning's Form
Solve For	Channel Depth

Input Data		
Mannings Coeffic	0.030	bare earth
Slope	.020000	ft/ft
Left Side Slope	2.00	V : H
Right Side Slope	2.00	V : H
Bottom Width	1.00	ft
Discharge	0.71	cfs

Results		
Depth	0.27	ft <1' ∴ ok freeboard 0.73'
Flow Area	0.3	ft²
Wetted Perim	1.60	ft
Top Width	1.27	ft
Critical Depth	0.24	ft
Critical Slope	0.029060	ft/ft
Velocity	2.32	ft/s
Velocity Head	0.08	ft
Specific Energ	0.35	ft
Froude Numb	0.83	
Flow Type	Subcritical	

© Haestad Methods, Inc.
EarthFax Engineering Inc
37 Brookside Road Waterbury, CT 06708 USA (203) 755-1666

UD-1a Maximum Slope
Worksheet for Trapezoidal Channel

Project Description	
Worksheet	Dugout Refuse F
Flow Element	Trapezoidal Cha
Method	Manning's Formı
Solve For	Channel Depth

Input Data		
Mannings Coeffic	0.030	bare earth
Slope	0.150000	ft/ft
Left Side Slope	2.00	V : H
Right Side Slope	2.00	V : H
Bottom Width	1.00	ft
Discharge	0.71	cfs

Results		
Depth	0.14	ft
Flow Area	0.2	ft²
Wetted Perim	1.32	ft
Top Width	1.14	ft
Critical Depth	0.24	ft
Critical Slope	0.029060	ft/ft
Velocity	4.59	ft/s < 5 fps ∴ no riprap
Velocity Head	0.33	ft
Specific Energ	0.47	ft
Froude Numb	2.20	
Flow Type	Supercritical	

© Haestad Methods, Inc.
EarthFax Engineering Inc
37 Brookside Road Waterbury, CT 06708 USA (203) 755-1666

UD-1b Minimum Slope
Worksheet for Trapezoidal Channel

Project Description	
Worksheet	Dugout Refuse I
Flow Element	Trapezoidal Cha
Method	Manning's Form
Solve For	Channel Depth

Input Data		
Mannings Coeffic	0.030	bare earth
Slope	0.003000	ft/ft
Left Side Slope	2.00	V : H
Right Side Slope	2.00	V : H
Bottom Width	2.00	ft
Discharge	3.79	cfs

Results		
Depth	0.87	ft < 1.5' ∴ ok freeboard = 0.63 ft
Flow Area	2.1	ft²
Wetted Perim	3.94	ft
Top Width	2.87	ft
Critical Depth	0.46	ft
Critical Slope	0.023150	ft/ft
Velocity	1.79	ft/s
Velocity Head	0.05	ft
Specific Energ	0.92	ft
Froude Numb	0.37	
Flow Type	Subcritical	

UD-1b Maximum Slope
Worksheet for Trapezoidal Channel

Project Description	
Worksheet	Dugout Refuse F
Flow Element	Trapezoidal Cha
Method	Manning's Formı
Solve For	Channel Depth

Input Data		
Mannings Coeffic	0.030	
Slope	0.028000	ft/ft
Left Side Slope	2.00	V : H
Right Side Slope	2.00	V : H
Bottom Width	2.00	ft
Discharge	3.79	cfs

Results		
Depth	0.44	ft
Flow Area	1.0	ft²
Wetted Perim	2.98	ft
Top Width	2.44	ft
Critical Depth	0.46	ft
Critical Slope	0.023150	ft/ft
Velocity	3.92	ft/s < 5 fps ∴ no riprap
Velocity Head	0.24	ft
Specific Energ	0.67	ft
Froude Numb	1.10	
Flow Type	Supercritical	

© Haestad Methods, Inc.
EarthFax Engineering Inc
37 Brookside Road Waterbury, CT 06708 USA (203) 755-1666

UD-1c Minimum Slope
Worksheet for Trapezoidal Channel

Project Description	
Worksheet	Dugout Refuse I
Flow Element	Trapezoidal Cha
Method	Manning's Form
Solve For	Channel Depth

Input Data		
Mannings Coeffic	0.037	D_{50} = 6" Slope = 4.4%
Slope	044000	ft/ft
Left Side Slope	2.00	V : H
Right Side Slope	2.00	V : H
Bottom Width	2.00	ft
Discharge	4.74	cfs

Results		
Depth	0.50	ft < 1.0 ft ∴ ok
Flow Area	1.1	ft²
Wetted Perim	3.11	ft
Top Width	2.50	ft
Critical Depth	0.53	ft
Critical Slope	0.034748	ft/ft
Velocity	4.25	ft/s
Velocity Head	0.28	ft
Specific Energ	0.78	ft
Froude Numb	1.12	
Flow Type	Supercritical	

UD-1c Maximum Slope
Worksheet for Trapezoidal Channel

Project Description	
Worksheet	Dugout Refuse F
Flow Element	Trapezoidal Cha
Method	Manning's Formı
Solve For	Channel Depth

Input Data		
Mannings Coeffic	0.048	D_{50} = 6" Slope = 23.3%
Slope	233000	ft/ft
Left Side Slope	2.00	V : H
Right Side Slope	2.00	V : H
Bottom Width	2.00	ft
Discharge	4.74	cfs

Results		
Depth	0.35	ft
Flow Area	0.8	ft²
Wetted Perim	2.78	ft
Top Width	2.35	ft
Critical Depth	0.53	ft
Critical Slope	0.058969	ft/ft
Velocity	6.26	ft/s < 7.5 fps ∴ ok
Velocity Head	0.61	ft
Specific Energ	0.96	ft
Froude Numb	1.94	
Flow Type	Supercritical	

© Haestad Methods, Inc.
EarthFax Engineering Inc
37 Brookside Road Waterbury, CT 06708 USA (203) 755-1666

DD-1 Min Slope
Worksheet for Trapezoidal Channel

Project Description	
Worksheet	Dugout Refuse F
Flow Element	Trapezoidal Cha
Method	Manning's Form
Solve For	Channel Depth

Input Data		
Mannings Coeffic	0.035	rocky earth
Slope	006000	ft/ft
Left Side Slope	2.00	V : H
Right Side Slope	2.00	V : H
Bottom Width	4.00	ft
Discharge	11.22	cfs

Results		
Depth	0.96	ft < 1.5' ∴ ok freeboard = 0.54'
Flow Area	4.3	ft²
Wetted Perim	6.16	ft
Top Width	4.96	ft
Critical Depth	0.61	ft
Critical Slope	0.026358	ft/ft
Velocity	2.60	ft/s
Velocity Head	0.10	ft
Specific Energ	1.07	ft
Froude Numb	0.49	
Flow Type	Subcritical	

© Haestad Methods, Inc.
EarthFax Engineering Inc
37 Brookside Road Waterbury, CT 06708 USA (203) 755-1666

DD-1 Max Slope
Worksheet for Trapezoidal Channel

Project Description	
Worksheet	Dugout Refuse F
Flow Element	Trapezoidal Cha
Method	Manning's Form
Solve For	Channel Depth

Input Data		
Mannings Coeffic	0.044	
Slope	129000	ft/ft
Left Side Slope	2.00	V : H
Right Side Slope	2.00	V : H
Bottom Width	4.00	ft
Discharge	11.22	cfs

$D_{50} = 6''$

Results		
Depth	0.43	ft
Flow Area	1.8	ft²
Wetted Perim	4.96	ft
Top Width	4.43	ft
Critical Depth	0.61	ft
Critical Slope	0.041091	ft/ft
Velocity	6.22	ft/s
Velocity Head	0.60	ft
Specific Energ	1.03	ft
Froude Numb	1.72	
Flow Type	Supercritical	

< 7.5 fps $\therefore$ ok

© Haestad Methods, Inc.
EarthFax Engineering Inc
37 Brookside Road Waterbury, CT 06708 USA (203) 755-1666

DD-1 Max Slope Not Requireing Riprap
Worksheet for Trapezoidal Channel

Project Description	
Worksheet	Dugout Refuse F
Flow Element	Trapezoidal Cha
Method	Manning's Form
Solve For	Channel Depth

Input Data		
Mannings Coeffic	0.035	rocky soil
Slope	040000	ft/ft
Left Side Slope	2.00	V : H
Right Side Slope	2.00	V : H
Bottom Width	4.00	ft
Discharge	11.22	cfs

all channel sections with a slope greater than 4% will need $D_{50} = 6''$ riprap

Results		
Depth	0.54	ft
Flow Area	2.3	ft²
Wetted Perim	5.20	ft
Top Width	4.54	ft
Critical Depth	0.61	ft
Critical Slope	0.026358	ft/ft
Velocity	4.91	ft/s < 5 fps
Velocity Head	0.37	ft
Specific Energ	0.91	ft
Froude Numb	1.22	
Flow Type	Supercritical	

DD-2a Minimum Slope
Worksheet for Trapezoidal Channel

Project Description	
Worksheet	Dugout Refuse I
Flow Element	Trapezoidal Cha
Method	Manning's Form
Solve For	Channel Depth

Input Data		
Mannings Coeffic	0.030	bare earth/coal refuse
Slope	019000	ft/ft
Left Side Slope	2.00	V : H
Right Side Slope	2.00	V : H
Bottom Width	15.00	ft
Discharge	8.02	cfs

Results		
Depth	0.22	ft < 2' ∴ ok
Flow Area	3.3	ft²
Wetted Perim	15.49	ft
Top Width	15.22	ft
Critical Depth	0.21	ft
Critical Slope	0.022733	ft/ft
Velocity	2.43	ft/s
Velocity Head	0.09	ft
Specific Energ	0.31	ft
Froude Numb	0.92	
Flow Type	Subcritical	

DD-2a Maximum Slope
Worksheet for Trapezoidal Channel

Project Description	
Worksheet	Dugout Refuse I
Flow Element	Trapezoidal Cha
Method	Manning's Form
Solve For	Channel Depth

Input Data		
Mannings Coeffic	0.030	bare earth / coal refuse
Slope	100000	ft/ft
Left Side Slope	2.00	V : H
Right Side Slope	2.00	V : H
Bottom Width	15.00	ft The ditch is also the access road for the sediment pond.
Discharge	8.02	cfs

Results		
Depth	0.13	ft
Flow Area	2.0	ft²
Wetted Perim	15.30	ft
Top Width	15.13	ft
Critical Depth	0.21	ft
Critical Slope	0.022733	ft/ft
Velocity	4.03	ft/s < 5.0 fps ∴ no riprap
Velocity Head	0.25	ft
Specific Energ	0.38	ft
Froude Numb	1.96	
Flow Type	Supercritical	

© Haestad Methods, Inc.
EarthFax Engineering Inc
37 Brookside Road Waterbury, CT 06708 USA (203) 755-1666

DD-2b Minimum Slope
Worksheet for Trapezoidal Channel

Project Description	
Worksheet	Dugout Refuse F
Flow Element	Trapezoidal Cha
Method	Manning's Formı
Solve For	Channel Depth

Input Data		
Mannings Coeffic	0.038	D_{50} = 6" slope = 5%
Slope	050000	ft/ft
Left Side Slope	2.00	V : H
Right Side Slope	2.00	V : H
Bottom Width	4.00	ft
Discharge	8.02	cfs

Results		
Depth	0.43	ft < 1.0 Ft ∴ ok
Flow Area	1.8	ft²
Wetted Perim	4.95	ft
Top Width	4.43	ft
Critical Depth	0.49	ft
Critical Slope	0.031690	ft/ft
Velocity	4.48	ft/s
Velocity Head	0.31	ft
Specific Energ	0.74	ft
Froude Numb	1.24	
Flow Type	Supercritical	

DD-2b Maximum Slope
Worksheet for Trapezoidal Channel

Project Description	
Worksheet	Dugout Refuse F
Flow Element	Trapezoidal Cha
Method	Manning's Form
Solve For	Channel Depth

Input Data		
Mannings Coeffic	0.044	$D_{50} = 6''$ slope = 13.5%
Slope	135000	ft/ft
Left Side Slope	2.00	V : H
Right Side Slope	2.00	V : H
Bottom Width	4.00	ft
Discharge	8.02	cfs

Results		
Depth	0.35	ft
Flow Area	1.4	ft²
Wetted Perim	4.77	ft
Top Width	4.35	ft
Critical Depth	0.49	ft
Critical Slope	0.043363	ft/ft
Velocity	5.57	ft/s < 7.5 fps ∴ ok
Velocity Head	0.48	ft
Specific Energ	0.83	ft
Froude Numb	1.71	
Flow Type	Supercritical	

© Haestad Methods, Inc.
EarthFax Engineering Inc
37 Brookside Road Waterbury, CT 06708 USA (203) 755-1666

DD-3a Minimum Slope
Worksheet for Trapezoidal Channel

Project Description	
Worksheet	Dugout Refuse I
Flow Element	Trapezoidal Cha
Method	Manning's Form
Solve For	Channel Depth

Input Data			
Mannings Coeffic	0.030	bare earth	
Slope	013000	ft/ft	
Left Side Slope	2.00	V : H	
Right Side Slope	2.00	V : H	
Bottom Width	15.00	ft	
Discharge	16.03	cfs	

Results			
Depth	0.37	ft	< 1.0 ∴ ok
Flow Area	5.6	ft²	
Wetted Perim	15.83	ft	
Top Width	15.37	ft	
Critical Depth	0.33	ft	
Critical Slope	0.019771	ft/ft	
Velocity	2.84	ft/s	
Velocity Head	0.13	ft	
Specific Energ	0.50	ft	
Froude Numb	0.83		
Flow Type	Subcritical		

DD-3a Maximum Slope
Worksheet for Trapezoidal Channel

Project Description	
Worksheet	Dugout Refuse F
Flow Element	Trapezoidal Cha
Method	Manning's Formı
Solve For	Channel Depth

Input Data		
Mannings Coeffic	0.030	bare earth
Slope	035000	ft/ft
Left Side Slope	2.00	V : H
Right Side Slope	2.00	V : H
Bottom Width	15.00	ft
Discharge	16.03	cfs

Results		
Depth	0.28	ft
Flow Area	4.2	ft²
Wetted Perim	15.62	ft
Top Width	15.28	ft
Critical Depth	0.33	ft
Critical Slope	0.019771	ft/ft
Velocity	3.84	ft/s < 5.0 fps ∴ ok
Velocity Head	0.23	ft
Specific Energ	0.51	ft
Froude Numb	1.30	
Flow Type	Supercritical	

© Haestad Methods, Inc.
EarthFax Engineering Inc
37 Brookside Road Waterbury, CT 06708 USA (203) 755-1666

DD-3b Minimum Slope
Worksheet for Trapezoidal Channel

Project Description	
Worksheet	Dugout Refuse F
Flow Element	Trapezoidal Cha
Method	Manning's Form
Solve For	Channel Depth

Input Data		
Mannings Coeffic	0.037	$D_{50} = 6''$ Slope = 4.6%
Slope	046000	ft/ft
Left Side Slope	2.00	V : H
Right Side Slope	2.00	V : H
Bottom Width	2.00	ft
Discharge	16.03	cfs

Results		
Depth	1.03	ft < 1.5' ∴ ok
Flow Area	2.6	ft²
Wetted Perim	4.31	ft
Top Width	3.03	ft
Critical Depth	1.14	ft
Critical Slope	0.033467	ft/ft
Velocity	6.15	ft/s
Velocity Head	0.59	ft
Specific Energ	1.62	ft
Froude Numb	1.17	
Flow Type	Supercritical	

DD-3b Maximum Slope
Worksheet for Trapezoidal Channel

Project Description	
Worksheet	Dugout Refuse F
Flow Element	Trapezoidal Cha
Method	Manning's Form
Solve For	Channel Depth

Input Data		
Mannings Coeffic	0.041	D_{50} = 6" Slope = 9.1%
Slope	091000	ft/ft
Left Side Slope	2.00	V : H
Right Side Slope	2.00	V : H
Bottom Width	2.00	ft
Discharge	16.03	cfs

Results		
Depth	0.90	ft
Flow Area	2.2	ft²
Wetted Perim	4.01	ft
Top Width	2.90	ft
Critical Depth	1.14	ft
Critical Slope	0.041698	ft/ft
Velocity	7.28	ft/s < 7.5 fps ∴ ok
Velocity Head	0.82	ft
Specific Energ	1.72	ft
Froude Numb	1.47	
Flow Type	Supercritical	

© Haestad Methods, Inc.
EarthFax Engineering Inc
37 Brookside Road Waterbury, CT 06708 USA (203) 755-1666

UC-1
Worksheet for Circular Channel

Project Description	
Worksheet	Dugout Refuse
Flow Element	Circular Channe
Method	Manning's Form
Solve For	Channel Depth

Input Data		
Mannings Coeffic	0.024	
Slope	045400	ft/ft
Diameter	24	in
Discharge	4.74	cfs

Results		
Depth	0.58	ft < 2.0' ∴ ok
Flow Area	0.8	ft²
Wetted Perime	2.27	ft
Top Width	1.81	ft
Critical Depth	0.77	ft
Percent Full	28.9	%
Critical Slope	0.015456	ft/ft
Velocity	6.31	ft/s > 5 fps ∴ riprap is needed
Velocity Head	0.62	ft
Specific Energ	1.20	ft
Froude Numbe	1.73	
Maximum Disc	28.08	cfs
Discharge Full	26.11	cfs
Slope Full	0.001496	ft/ft
Flow Type	Supercritical	

UC-2
Worksheet for Circular Channel

Project Description	
Worksheet	Dugout Refuse
Flow Element	Circular Channe
Method	Manning's Forr
Solve For	Channel Depth

Input Data		
Mannings Coeffic	0.024	
Slope	015000	ft/ft
Diameter	24	in
Discharge	6.78	cfs

Results		
Depth	0.94	ft < 2' ∴ ok
Flow Area	1.5	ft²
Wetted Perime	3.03	ft
Top Width	2.00	ft
Critical Depth	0.92	ft
Percent Full	47.1	%
Critical Slope	0.016113	ft/ft
Velocity	4.66	ft/s < 5.0 fps ∴ no riprap
Velocity Head	0.34	ft
Specific Energ	1.28	ft
Froude Numbe	0.96	
Maximum Disc	16.14	cfs
Discharge Full	15.01	cfs
Slope Full	0.003062	ft/ft
Flow Type	Subcritical	

© Haestad Methods, Inc.
EarthFax Engineering Inc
37 Brookside Road Waterbury, CT 06708 USA (203) 755-1666

RD-1a Minimum Slope
Worksheet for Trapezoidal Channel

Project Description	
Worksheet	Refuse Pile Reclam
Flow Element	Trapezoidal Channe
Method	Manning's Formula
Solve For	Channel Depth

Input Data			
Mannings Coeffic	0.035		rocky soil
Slope	020000	ft/ft	
Left Side Slope	2.00	V : H	
Right Side Slope	2.00	V : H	
Bottom Width	1.00	ft	
Discharge	0.95	cfs	

Results			
Depth	0.35	ft	< 1.0' ok
Flow Area	0.4	ft²	
Wetted Perim	1.79	ft	
Top Width	1.35	ft	
Critical Depth	0.29	ft	
Critical Slope	0.038924	ft/ft	
Velocity	2.27	ft/s	
Velocity Head	0.08	ft	
Specific Energ	0.44	ft	
Froude Numb	0.72		
Flow Type	Subcritical		

RD-1a Maximum Slope
Worksheet for Trapezoidal Channel

Project Description	
Worksheet	Refuse Pile Reclam
Flow Element	Trapezoidal Channe
Method	Manning's Formula
Solve For	Channel Depth

Input Data		
Mannings Coeffic	0.035	rocky soil
Slope	150000	ft/ft
Left Side Slope	2.00	V : H
Right Side Slope	2.00	V : H
Bottom Width	1.00	ft
Discharge	0.95	cfs

Results		
Depth	0.19	ft
Flow Area	0.2	ft²
Wetted Perim	1.43	ft
Top Width	1.19	ft
Critical Depth	0.29	ft
Critical Slope	0.038924	ft/ft
Velocity	4.56	ft/s < 5.0 fps OK
Velocity Head	0.32	ft
Specific Energ	0.51	ft
Froude Numb	1.92	
Flow Type	Supercritical	

© Haestad Methods, Inc.
EarthFax Engineering Inc
37 Brookside Road Waterbury, CT 06708 USA (203) 755-1666

RD-1b Minimum Slope
Worksheet for Trapezoidal Channel

Project Description	
Worksheet	Refuse Pile Reclam
Flow Element	Trapezoidal Channe
Method	Manning's Formula
Solve For	Channel Depth

Input Data		
Mannings Coeffic	0.030	bare soil
Slope	003000	ft/ft
Left Side Slope	2.00	V : H
Right Side Slope	2.00	V : H
Bottom Width	3.00	ft
Discharge	5.41	cfs

Results		
Depth	0.83	ft < 1.5' ∴ ok
Flow Area	2.8	ft²
Wetted Perim	4.86	ft
Top Width	3.83	ft
Critical Depth	0.45	ft
Critical Slope	0.021335	ft/ft
Velocity	1.90	ft/s
Velocity Head	0.06	ft
Specific Energ	0.89	ft
Froude Numb	0.39	
Flow Type	Subcritical	

RD-1b Maximum Slope
Worksheet for Trapezoidal Channel

Project Description	
Worksheet	Refuse Pile Reclam
Flow Element	Trapezoidal Channe
Method	Manning's Formula
Solve For	Channel Depth

Input Data		
Mannings Coeffic	0.030	bare soil
Slope	046000	ft/ft
Left Side Slope	2.00	V : H
Right Side Slope	2.00	V : H
Bottom Width	3.00	ft
Discharge	5.41	cfs

Results		
Depth	0.36	ft
Flow Area	1.1	ft²
Wetted Perim	3.80	ft
Top Width	3.36	ft
Critical Depth	0.45	ft
Critical Slope	0.021336	ft/ft
Velocity	4.75	ft/s < 5.0 fps ∴ ok
Velocity Head	0.35	ft
Specific Energ	0.71	ft
Froude Numb	1.44	
Flow Type	Supercritical	

© Haestad Methods, Inc.
EarthFax Engineering Inc
37 Brookside Road Waterbury, CT 06708 USA (203) 755-1666

RD-1c Minimum Slope
Worksheet for Trapezoidal Channel

Project Description	
Worksheet	Refuse Pile Reclam
Flow Element	Trapezoidal Channe
Method	Manning's Formula
Solve For	Channel Depth

Input Data		
Mannings Coeffic	0.037	$D_{50} = 6''$ slope = 4.4 %
Slope	044000	ft/ft
Left Side Slope	2.00	V : H
Right Side Slope	2.00	V : H
Bottom Width	2.00	ft
Discharge	6.36	cfs

Results		
Depth	0.59	ft < 1.0' ∴ OK
Flow Area	1.4	ft²
Wetted Perim	3.33	ft
Top Width	2.59	ft
Critical Depth	0.64	ft
Critical Slope	0.034267	ft/ft
Velocity	4.65	ft/s
Velocity Head	0.34	ft
Specific Energ	0.93	ft
Froude Numb	1.13	
Flow Type	Supercritical	

RD-1c Maximum Slope
Worksheet for Trapezoidal Channel

Project Description	
Worksheet	Refuse Pile Reclam
Flow Element	Trapezoidal Channe
Method	Manning's Formula
Solve For	Channel Depth

Input Data		
Mannings Coeffic	0.048	$D_{50} = 6''$ Slope = 23.3%
Slope	233000	ft/ft
Left Side Slope	2.00	V : H
Right Side Slope	2.00	V : H
Bottom Width	2.00	ft
Discharge	6.36	cfs

Results		
Depth	0.42	ft
Flow Area	0.9	ft²
Wetted Perim	2.93	ft
Top Width	2.42	ft
Critical Depth	0.64	ft
Critical Slope	0.057671	ft/ft
Velocity	6.90	ft/s < 7.5 fps ∴ ok
Velocity Head	0.74	ft
Specific Energ	1.16	ft
Froude Numb	1.97	
Flow Type	Supercritical	

RD-2 Minimum Slope
Worksheet for Trapezoidal Channel

Project Description	
Worksheet	Refuse Pile Reclam
Flow Element	Trapezoidal Channe
Method	Manning's Formula
Solve For	Channel Depth

Input Data		
Mannings Coeffic	0.035	rocky soil
Slope	010000	ft/ft
Left Side Slope	2.00	V : H
Right Side Slope	2.00	V : H
Bottom Width	1.00	ft
Discharge	0.71	cfs

Results		
Depth	0.37	ft <1.0 ∴ ok
Flow Area	0.4	ft²
Wetted Perim	1.82	ft
Top Width	1.37	ft
Critical Depth	0.24	ft
Critical Slope	0.039552	ft/ft
Velocity	1.63	ft/s
Velocity Head	0.04	ft
Specific Energ	0.41	ft
Froude Numb	0.51	
Flow Type	Subcritical	

© Haestad Methods, Inc.
EarthFax Engineering Inc
37 Brookside Road Waterbury, CT 06708 USA (203) 755-1666

RD-2 Maximum Slope
Worksheet for Trapezoidal Channel

Project Description	
Worksheet	Refuse Pile Reclam
Flow Element	Trapezoidal Chann
Method	Manning's Formula
Solve For	Channel Depth

Input Data		
Mannings Coeffic	0.035	rocky soil
Slope	143000	ft/ft
Left Side Slope	2.00	V : H
Right Side Slope	2.00	V : H
Bottom Width	1.00	ft
Discharge	0.71	cfs

Results		
Depth	0.16	ft
Flow Area	0.2	ft²
Wetted Perim	1.36	ft
Top Width	1.16	ft
Critical Depth	0.24	ft
Critical Slope	0.039553	ft/ft
Velocity	4.08	ft/s <5.0 fps ∴ ok
Velocity Head	0.26	ft
Specific Energ	0.42	ft
Froude Numb	1.86	
Flow Type	Supercritical	

RD-3 Minimum Slope
Worksheet for Trapezoidal Channel

Project Description	
Worksheet	Refuse Pile Reclam
Flow Element	Trapezoidal Chann
Method	Manning's Formula
Solve For	Channel Depth

Input Data		
Mannings Coeffic	0.035	rocky soil
Slope	080000	ft/ft
Left Side Slope	2.00	V : H
Right Side Slope	2.00	V : H
Bottom Width	2.00	ft
Discharge	0.90	cfs

Results		
Depth	0.14	ft < 1.0' ∴ ok
Flow Area	0.3	ft²
Wetted Perim	2.32	ft
Top Width	2.14	ft
Critical Depth	0.18	ft
Critical Slope	0.036423	ft/ft
Velocity	3.04	ft/s
Velocity Head	0.14	ft
Specific Energ	0.29	ft
Froude Numb	1.44	
Flow Type	Supercritical	

RD-3 Maximum Slope
Worksheet for Trapezoidal Channel

Project Description	
Worksheet	Refuse Pile Reclam
Flow Element	Trapezoidal Channe
Method	Manning's Formula
Solve For	Channel Depth

Input Data		
Mannings Coeffic	0.035	rocky soil
Slope	305000	ft/ft
Left Side Slope	2.00	V : H
Right Side Slope	2.00	V : H
Bottom Width	2.00	ft
Discharge	0.90	cfs

Results		
Depth	0.09	ft
Flow Area	0.2	ft²
Wetted Perim	2.21	ft
Top Width	2.09	ft
Critical Depth	0.18	ft
Critical Slope	0.036423	ft/ft
Velocity	4.63	ft/s < 5.0 fps ∴ ok
Velocity Head	0.33	ft
Specific Energ	0.43	ft
Froude Numb	2.68	
Flow Type	Supercritical	

© Haestad Methods, Inc.
EarthFax Engineering Inc
37 Brookside Road Waterbury, CT 06708 USA (203) 755-1666
Project Engineer: Richard White

RD-4 Minimum Slope
Worksheet for Trapezoidal Channel

Project Description	
Worksheet	Refuse Pile Reclam
Flow Element	Trapezoidal Chann
Method	Manning's Formula
Solve For	Channel Depth

Input Data		
Mannings Coeffic	0.035	rocky soil
Slope	028000	ft/ft
Left Side Slope	2.00	V : H
Right Side Slope	2.00	V : H
Bottom Width	1.00	ft
Discharge	0.41	cfs

Results		
Depth	0.19	ft < 1.0' ∴ ok
Flow Area	0.2	ft²
Wetted Perim	1.42	ft
Top Width	1.19	ft
Critical Depth	0.17	ft
Critical Slope	0.041233	ft/ft
Velocity	1.97	ft/s
Velocity Head	0.06	ft
Specific Energ	0.25	ft
Froude Numb	0.83	
Flow Type	Subcritical	

© Haestad Methods, Inc.
EarthFax Engineering Inc
37 Brookside Road Waterbury, CT 06708 USA (203) 755-1666

RD-4 Maximum Slope
Worksheet for Trapezoidal Channel

Project Description	
Worksheet	Refuse Pile Reclam
Flow Element	Trapezoidal Channe
Method	Manning's Formula
Solve For	Channel Depth

Input Data		
Mannings Coeffic	0.035	rocky soil
Slope	061000	ft/ft
Left Side Slope	2.00	V : H
Right Side Slope	2.00	V : H
Bottom Width	1.00	ft
Discharge	0.41	cfs

Results		
Depth	0.15	ft
Flow Area	0.2	ft²
Wetted Perim	1.33	ft
Top Width	1.15	ft
Critical Depth	0.17	ft
Critical Slope	0.041233	ft/ft
Velocity	2.56	ft/s < 5.0 for ∴ ok
Velocity Head	0.10	ft
Specific Energ	0.25	ft
Froude Numb	1.21	
Flow Type	Supercritical	

© Haestad Methods, Inc.
EarthFax Engineering Inc
37 Brookside Road Waterbury, CT 06708 USA (203) 755-1666

RD-5 Minimum Slope
Worksheet for Trapezoidal Channel

Project Description	
Worksheet	Refuse Pile Reclam
Flow Element	Trapezoidal Chann
Method	Manning's Formula
Solve For	Channel Depth

Input Data		
Mannings Coeffic	0.030	bare soil
Slope	017000	ft/ft
Left Side Slope	2.00	V : H
Right Side Slope	2.00	V : H
Bottom Width	3.00	ft
Discharge	6.87	cfs

Results		
Depth	0.56	ft < 1.0' ∴ ok
Flow Area	1.9	ft²
Wetted Perim	4.26	ft
Top Width	3.56	ft
Critical Depth	0.53	ft
Critical Slope	0.020872	ft/ft
Velocity	3.71	ft/s
Velocity Head	0.21	ft
Specific Energ	0.78	ft
Froude Numb	0.91	
Flow Type	Subcritical	

RD-5 Maximum Slope
Worksheet for Trapezoidal Channel

Project Description	
Worksheet	Refuse Pile Reclam
Flow Element	Trapezoidal Chann
Method	Manning's Formula
Solve For	Channel Depth

Input Data			
Mannings Coeffic	0.030	bare soil	
Slope	024000	ft/ft	
Left Side Slope	2.00	V : H	
Right Side Slope	2.00	V : H	
Bottom Width	3.00	ft	
Discharge	6.87	cfs	

Results			
Depth	0.51	ft	
Flow Area	1.7	ft²	
Wetted Perim	4.13	ft	
Top Width	3.51	ft	
Critical Depth	0.53	ft	
Critical Slope	0.020871	ft/ft	
Velocity	4.16	ft/s	< 5.0 ∴ ok
Velocity Head	0.27	ft	
Specific Energ	0.78	ft	
Froude Numb	1.07		
Flow Type	Supercritical		

Swale 1
Worksheet for Trapezoidal Channel

Project Description	
Worksheet	Refuse Pile Reclam
Flow Element	Trapezoidal Chann
Method	Manning's Formula
Solve For	Channel Depth

Input Data		
Mannings Coeffic	0.030	bare soil
Slope	036000	ft/ft
Left Side Slope	4.00	V : H
Right Side Slope	4.00	V : H
Bottom Width	3.00	ft
Discharge	6.36	cfs

Results		
Depth	0.44	ft <1.0' ∴ ok
Flow Area	1.4	ft²
Wetted Perim	3.90	ft
Top Width	3.22	ft
Critical Depth	0.51	ft
Critical Slope	0.022267	ft/ft
Velocity	4.66	ft/s < 5.0 fps ∴ ok
Velocity Head	0.34	ft
Specific Energ	0.78	ft
Froude Numb	1.26	
Flow Type	Supercritical	

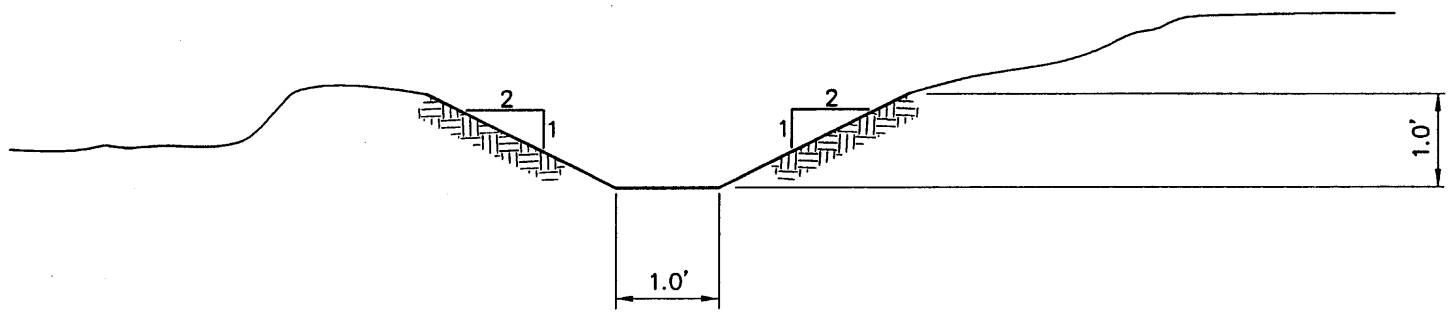

NO SCALE

UD–1a

EarthFax

G:\UC801\OB\HYDROLOGY\FG-UD-1a.DWG

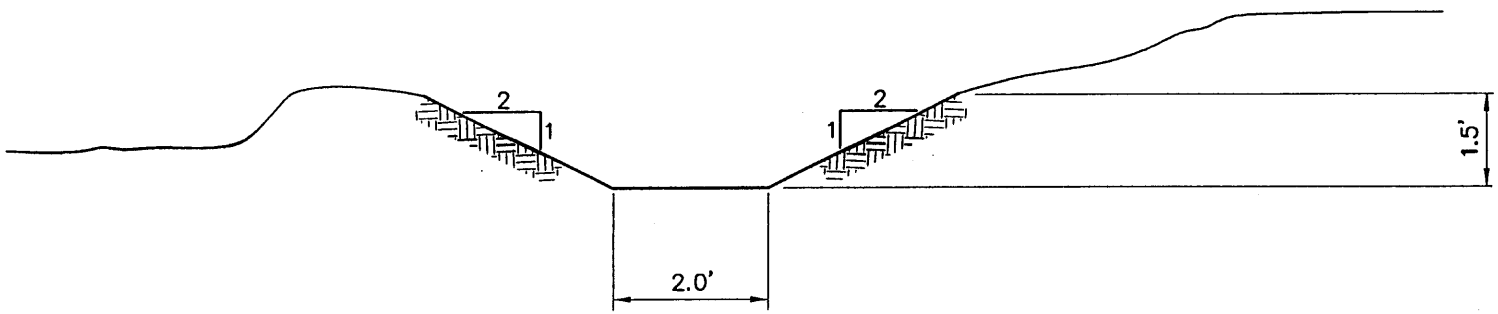

NO SCALE

UD–1b

EarthFax

G:\UC801\08\HYDROLOGY\FG-UD-1b.DWG

57

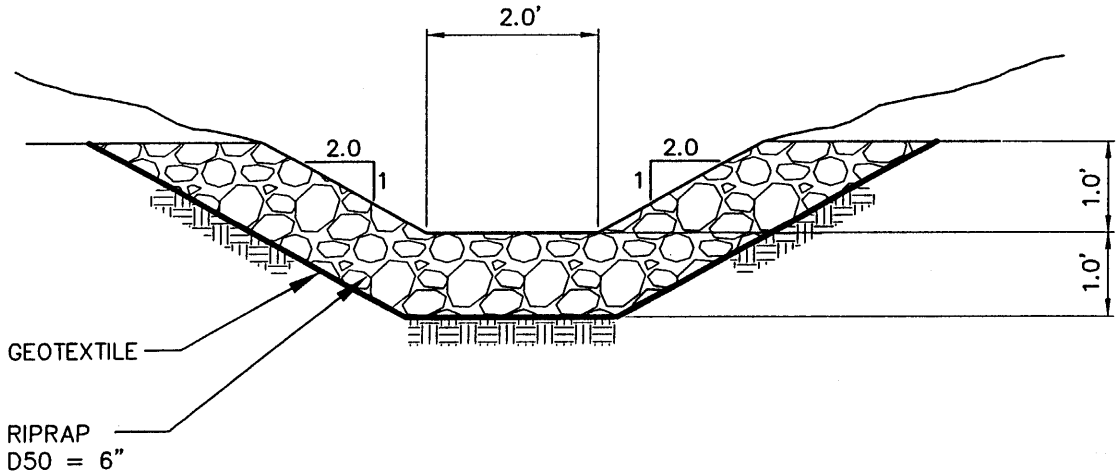

NO SCALE

UD–1c

EarthFax

G:\UC8801\08\HYDROLOGY\FIG-UD-1c.DWG

58

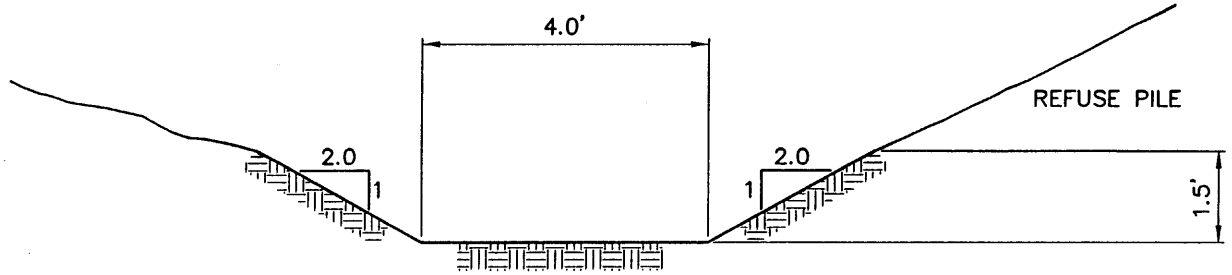

NO SCALE

DD-1 NON-RIPRAPPED SECTIONS (SLOPE UNDER 4%)

EarthFax

G:\UC801\08\HYDROLOGY\FIG-DD-1NORIP.DWG

59

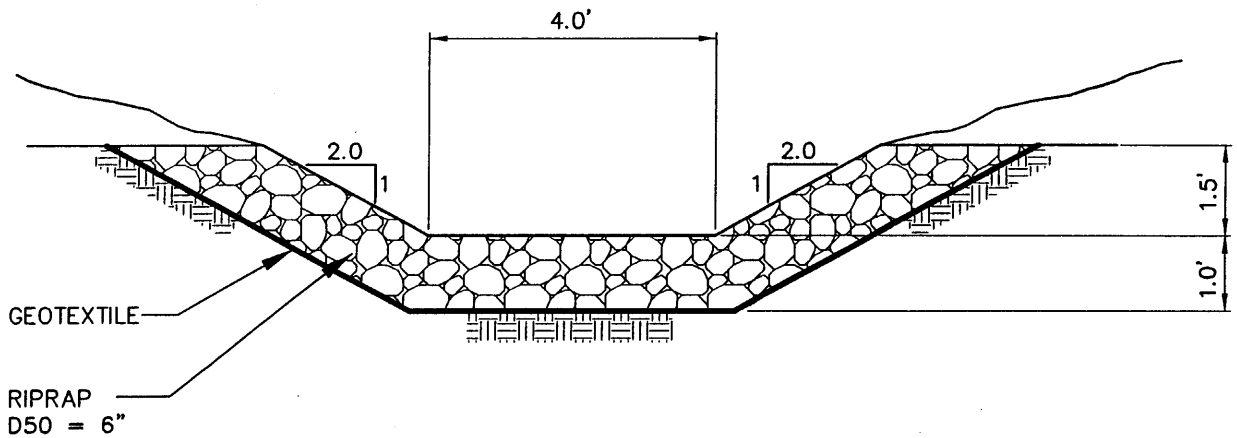

NO SCALE

DD-1 RIPRAPPED SECTIONS (SLOPE OVER 4%)

EarthFax

G:\UC801\08\HYDROLOGY\FIG-DD-1.DWG

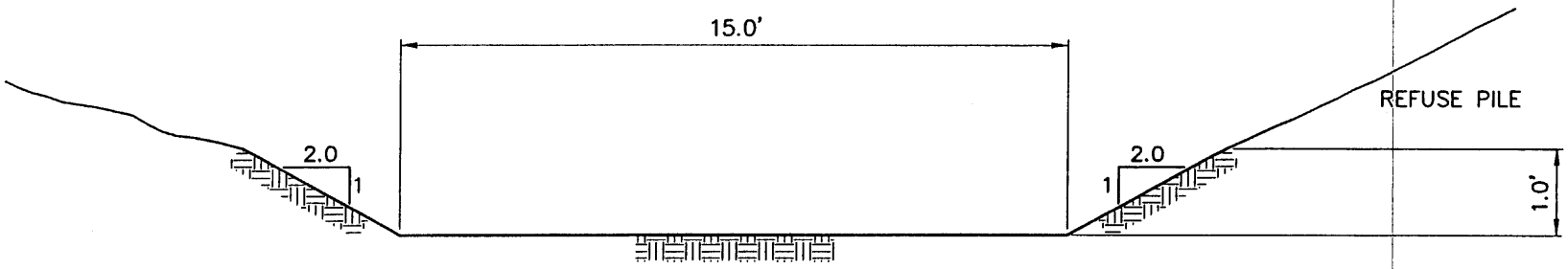

NO SCALE

DD-2a

EarthFax

G:\UC801\OB\HYDROLOGY\FIG-DD-2a.DWG

61

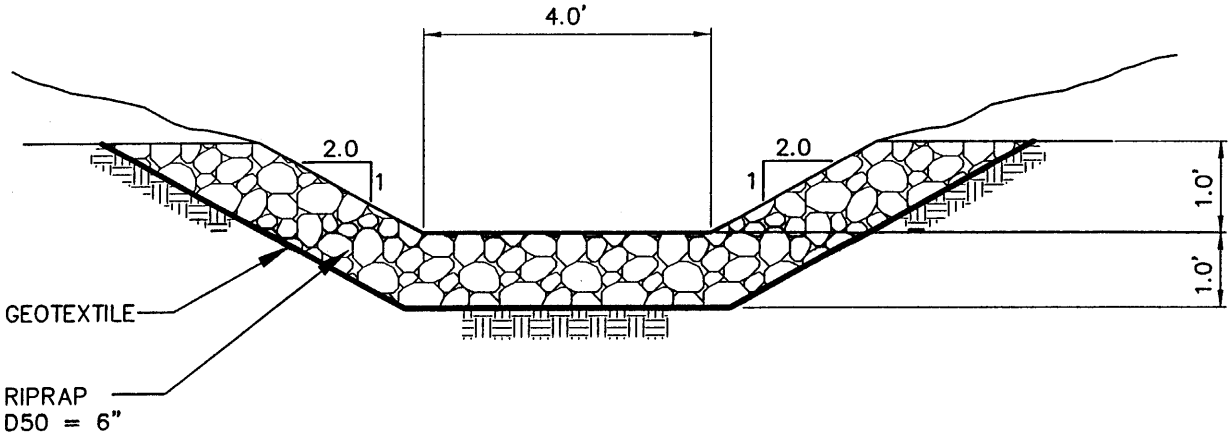

NO SCALE

DD-2b

EarthFax

G:\UC8011.08\HYDROLOGY\FIG-DD-2b.DWG

62

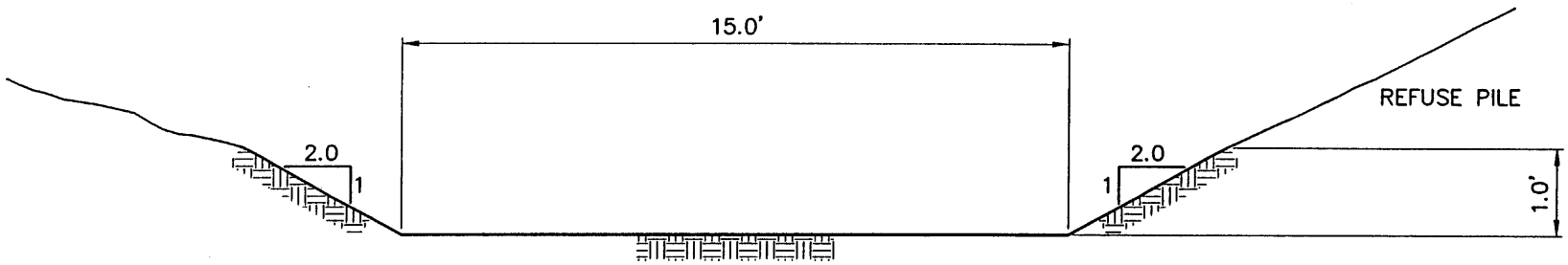

NO SCALE

DD-3a

EarthFax

G:\UC801\08\HYDROLOGY\FIG-DD-3a.DWG

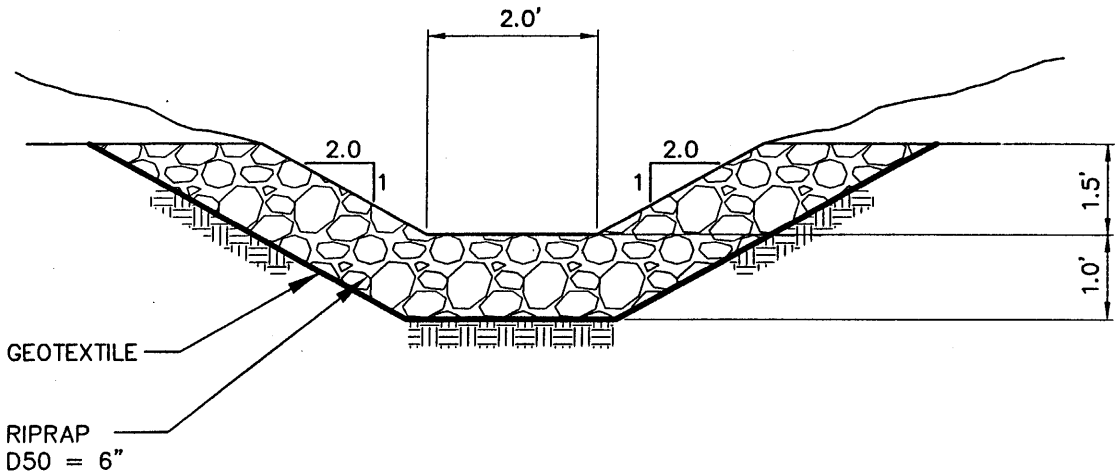

NO SCALE

DD-3b

EarthFax

G:\UC801\08\HYDROLOGY\FIG-DD-3b.DWG

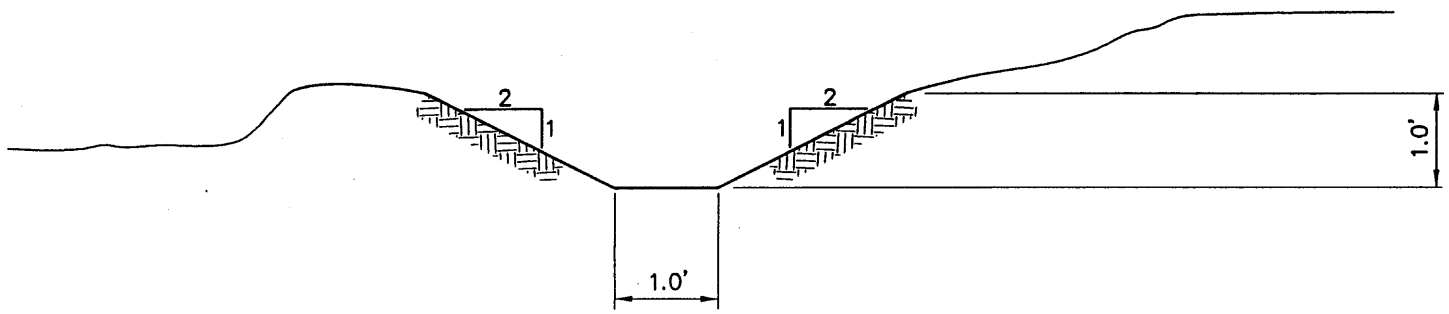

NO SCALE

RD-1a

EarthFax

G:\UC801\OB\HYDROLOGY\FG-RD-1a.DWG

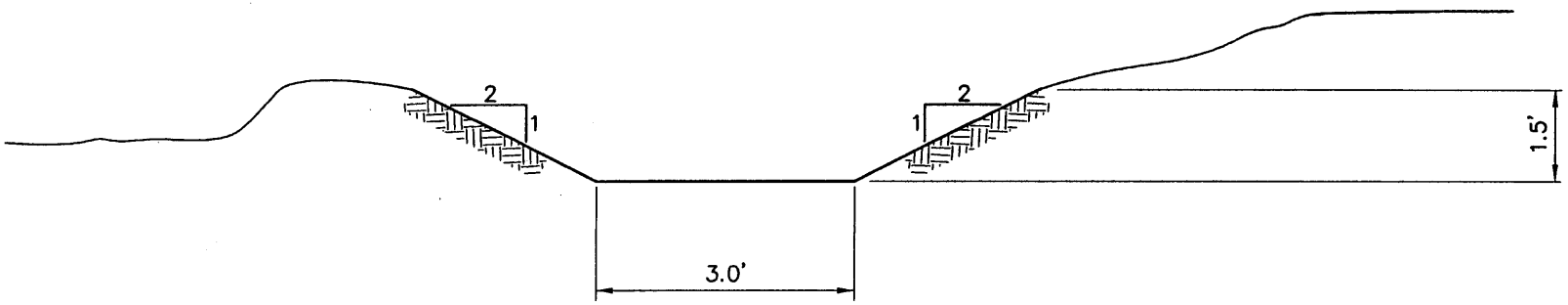

NO SCALE

RD-1b

EarthFax

G:\UC801\08\HYDROLOGY\FG-RD-1b.DWG

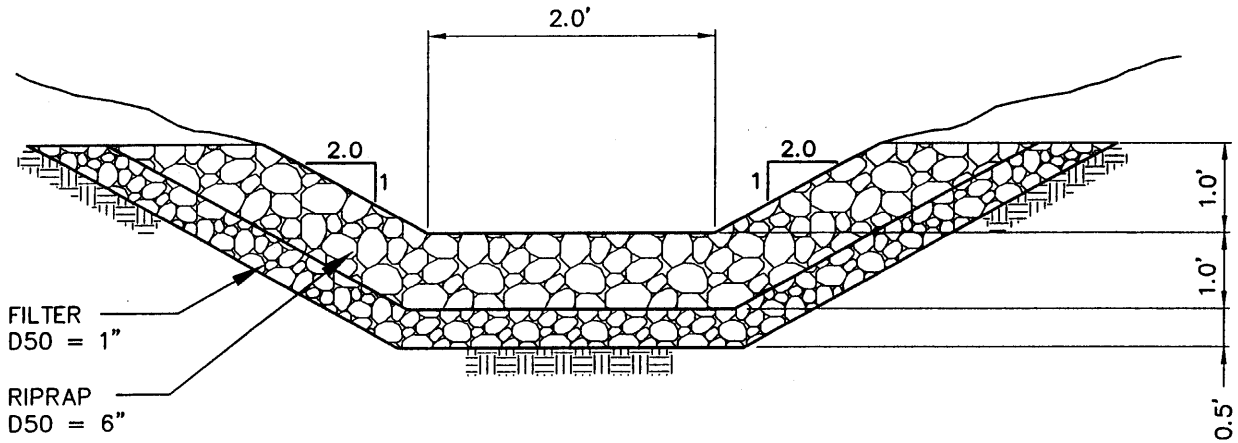

NO SCALE

RD-1c

EarthFax

G:\UC8011\08\HYDROLOGY\FIG-RD-1c.DWG

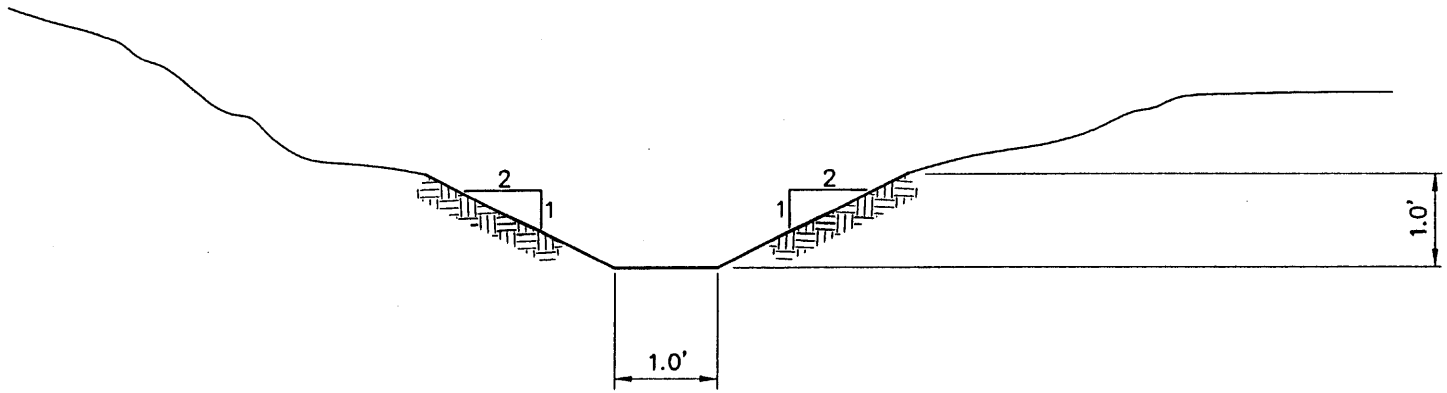

NO SCALE

RD-2

EarthFax

G:\UC801\GB\HYDROLOGY\FG-RD-2.DWG

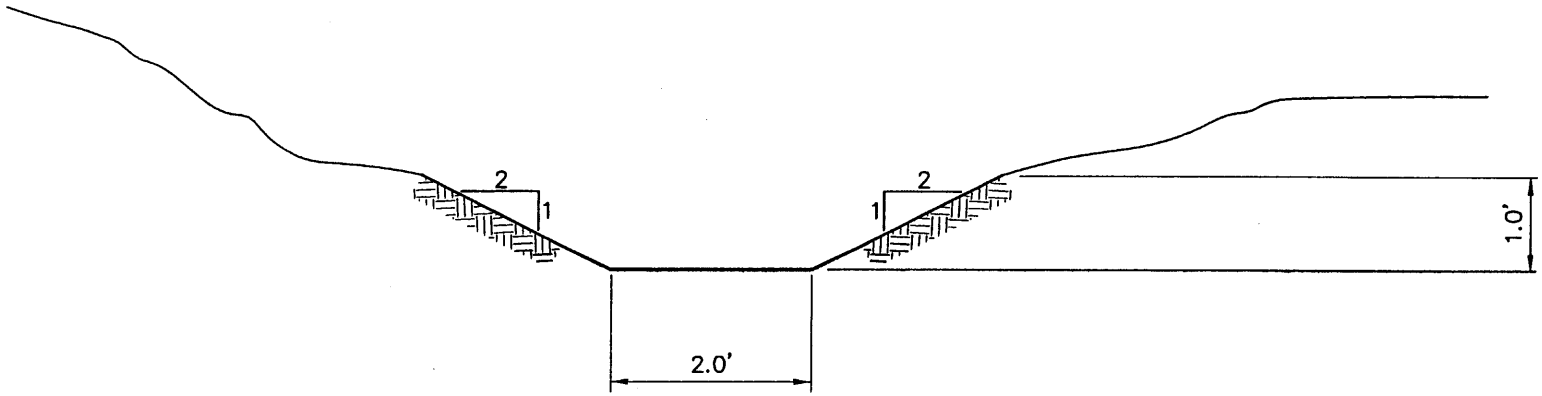

NO SCALE

RD-3

EarthFax

G:\UC8011\08\HYDROLOGY\FG-RD-3.DWG

69

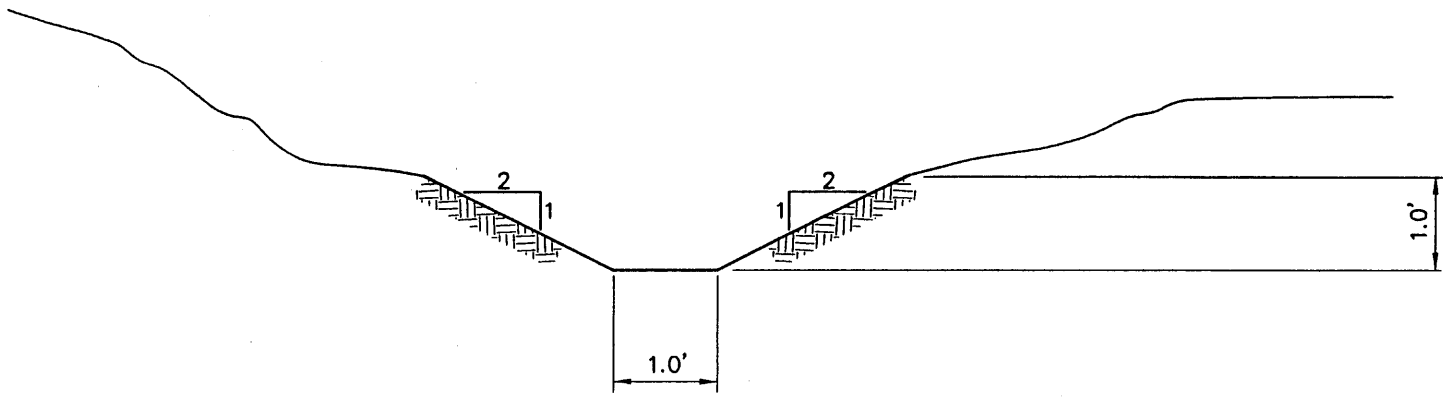

NO SCALE

RD-4

EarthFax

G:\UC801\08\HYDROLOGY\FG-RD-2.DWG

70

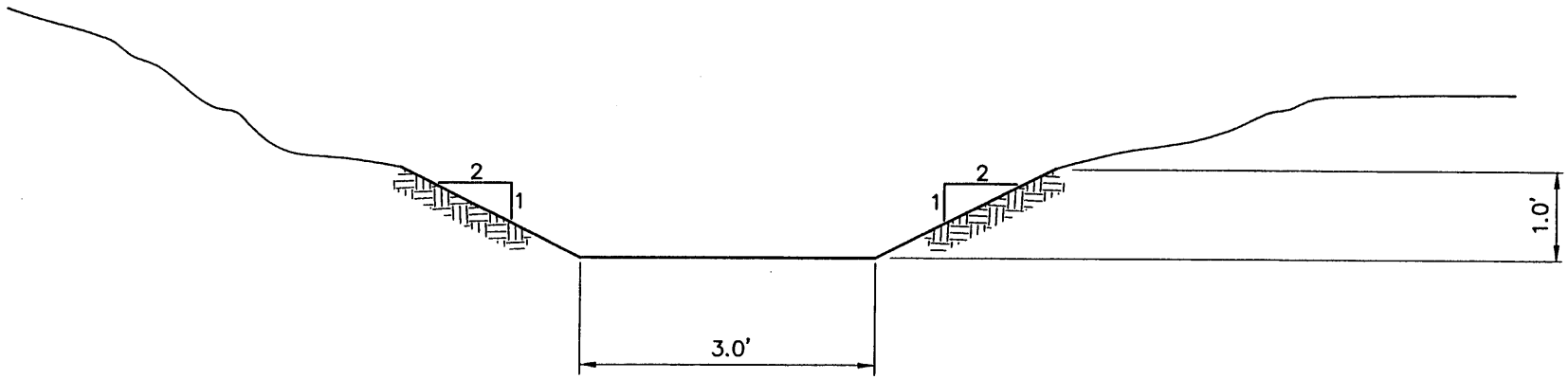

NO SCALE

RD-5

EarthFax

G:\UCB01\DB\HYDROLOGY\FG-RD-5.DWG

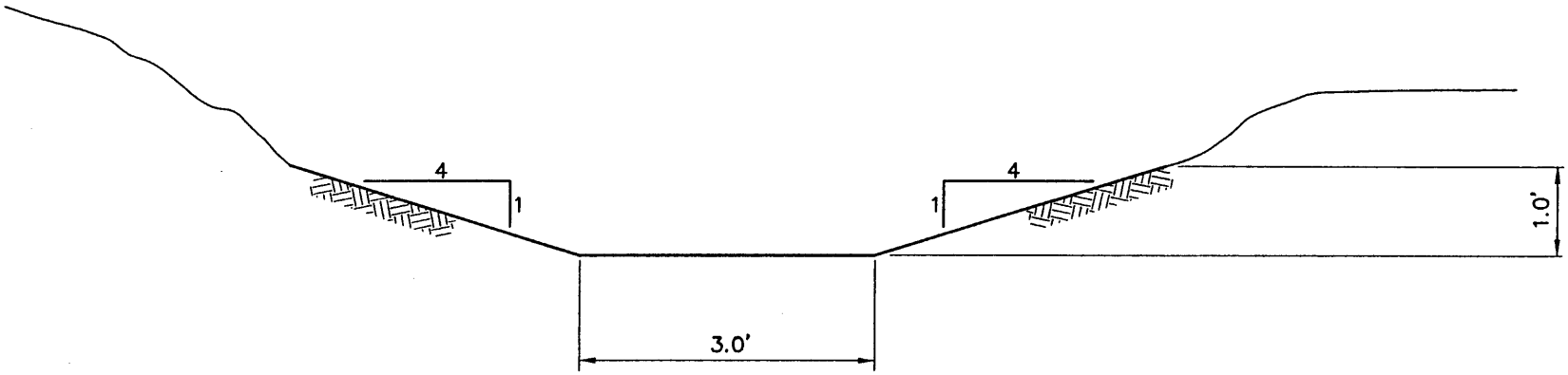

NO SCALE

SWALE 1

EarthFax

G:\UC801\OB\HYDROLOGY\FIG-SWALE 1.DWG

72