CHAPTER 1

LEGAL, FINANCIAL, COMPLIANCE AND RELATED INFORMATION

Section 28: NW1/4, N1/2SW1/4, SW1/4SW1/4

Section 29: All

Section 30: E1/2, E1/2W1/2

Waste Rock Storage Facility

T. 14 S., R. 12 E., SLBM, Utah (Approximately 26.8 acres)

Section 18: Portions of NE1/4, SW1/4 and SE1/4 of the NE1/4

All of Lease ML-42648, except the E1/2 of Section 8 and the NE1/4 of Section 17, is included within the Dugout Canyon Mine permit boundary. However, only the S1/2 SE1/4 of Section 9 from Lease ML-42649 is within the permit boundary. The ten acres described in UTU-76601 are also described in UTU-77985. The U.S. Department of Interior, Bureau of Land Management (BLM) right-of-way application UTU-76601 is included in Appendix 1-3.

The disturbed area encompasses 20.31 acres (Mine Facility area, including Gilson well pad and small substation), 2.2 acres (G-2 and G-3 Degas Well), 2.7 acres (G-4, G-5 and G-6 Degas Well), 1.8 acres (Leach field/pipeline area), 2.7 acres (Pace Canyon Fan Portal)and 26.8 acres (Refuse Pile area) totally 56.5 acres. That acreage includes a pre- and post mining road with an area of 1.6 acres and 2.03 acres of undisturbed land within the mine facilities disturbed area and 11.2 acres within the refuse pile disturbed area.

The permit boundary encompasses approximately 7,111 acres which includes the following surface ownership and acreage: 10 acres in the BLM right-of-way, approximately 567 acres of other federal lands, 920 acres of state lands, and fee acreage of approximately 5,614 acres (Plate 1-1 and RA Plate 1-1).

Coal ownership acreage within the permit area includes approximately 2,416.14 acres of federal coal, approximately 3,225 acres of state coal, and 800 acres of fee coal (Plate 1-2 and RA1-1B). Approximately 670 acres which include the surface subsidence area, refuse pile and leach field areas will not be mined although their acreage is included in the surface and coal ownership acreage totals.

APPENDIX 1-4

Disturbed Area Legal Description

C/007/039 Task ID #2104 March 2005
30CFR Sec.800; R645-301-800

Waste Rock Storage Facility
T. 14 S., R. 12 E., SLBM, Utah (Approximately 26.8 acres)
Section 18: Portions of NW1/4NE1/4NE1/4
Portions of NE1/4NE1/4NE1/4
Portions of SW1/4NE1/4NE1/4
Portions of SE1/4NE1/4NE1/4
Portions of NW1/4SE1/4NE1/4

Leachfield and Pipeline
T. 13 S., R. 12 E., SLBM, Utah (Approximately 1.8 acres)
Section 22: Portion of SE1/4SE1/4NE1/4SE1/4
Portion of NE1/4SE1/4NE1/4SE1/4
Portion of N1/2NE1/4SE1/4SE1/4;
Portion of SW1/4NE1/4SE1/4SE1/4;
Portion of S1/2NW1/4SE1/4SE1/4;
Portion of SE1/4NE1/4SW1/4SE1/4;
Portion of N1/2SE1/4SW1/4SE1/4;
Portion of NE1/4SW1/4SW1/4SE1/4;
Portion of S1/2SW1/4SW1/4SE1/4
Section 23: Portion of SW 1/4NW1/4NW1/4SW1/4;
Portion of SE1/4NW1/4NW1/4SW1/4;
Portion of NW1/4SW1/4NW1/4SW1/4;
Section 27: Portion of W1/2NW1/4NW1/4NE1/4
Portion of SE1/4NE1/4NE1/4NW1/4
Portion of E1/2SE1/4NE1/4NW1/4
Portion of SW1/4SE1/4NE1/4NW1/4

Main Facilities Area T. 13 S., R. 12 E., SLBM, Utah (Approximately 20.31 acres)

Section 23: A Portion of the following:
NE1/4NE1/4NW1/4SW1/4; NE1/4NW1/4NW1/4SW1/4;
NW1/4NE1/4NW1/4SW1/4;SW1/4SE1/4SW1/4NW1/4;
SE1/4SE1/4SW1/4NW1/4;NW1/4SE1/4SW1/4NW1/4;
NE1/4SE1/4SW1/4NW1/4;SW1/4SW1/4SE1/4NW1/4;
SE1/4SW1/4SE1/4NW1/4;NW1/4SW1/4SE1/4NW1/4;
NE1/4SW1/4SE1/4NW1/4;SW1/4NW1/4SE1/4NW1/4;
SE1/4NW1/4SE1/4NW1/4;NE1/4NW1/4SE1/4NW1/4;
SW1/4NE1/4SE1/4NW1/4;NW1/4NE1/4SE1/4NW1/4;
NE1/4NE1/4SE1/4NW1/4;W1/2SE1/4NE1/4NW1/4;
SW1/4NE1/4NE1/4NW1/4;NW1/4NE1/4NE1/4NW1/4;
NE1/4NE1/4NE1/4NW1/4

Section 14: A Portion of the following:
SE1/4SE1/4SE1/4SW1/4;
NE1/4SE1/4SE1/4SW1/4;
NW1/4SW1/4SW1/4SE1/4

Degassification Wells (Approximately 4.9 acres)

G-2 Degas Well, T. 13 S., R. 12 E., SLBM, Utah
Section 24: Portion of N1/2SW1/4NE1/4
G-3 Degas Well, T. 13 S., R. 13 E., SLBM, Utah
Section 19: Portion of N1/2SW1/4NW1/4
G-4 Degas Well, T. 13 S., R. 12 E., SLBM, Utah
Section 24: Portion of N1/2NE1/4NW1/4
G-5 Degas Well, T. 13 S., R. 12 E., SLBM, Utah
Section 24: Portion of N1/2NW1/4NE1/4
G-6 Degas Well, T. 13 S., R. 13 E., SLBM, Utah
Section 18: Portion of S1/2SW1/4NW1/4

Pace Canyon Fan Portal T. 13 S., R. 13 E., SLBM, Utah (Approximately 2.7 acres)

Section 30: Portion of E1/2NW1/4NW1/4

Total - 56.5 acres.

CHAPTER 2

SOILS

TABLE OF CONTENTS

Section — Page

210 INTRODUCTION 2-1

220 ENVIRONMENTAL DESCRIPTION 2-2

221 Prime Farmland Investigation 2-3

222 Soil Survey 2-3

222.100 Soils Map 2-4
222.200 Soil Identification 2-4
222.300 Soil Description 2-6

Overburden 2-6
Soil Type TS 2-8
Croydon loam, 8 - 30 Percent Slopes 2-25
Comodore-Datino Variant complex 2-26
Rock outcrop-Rubbleland-Travessilla complex 2-26

222.400 Soil Productivity 2-26

223 Soil Characterization 2-27

224 Substitute Topsoil 2-27

230 OPERATION PLAN 2-28

231 General Requirements 2-28

231.100 Removing and Storing Soil Methods 2-28
231.200 Suitability of Topsoil Substitutes/Supplements 2-30
231.300 Testing of Topsoil Handling and Reclamation Procedures Regarding Revegetation 2-30
231.400 Construction, Modification, Use, and Maintenance of Topsoil Storage Piles 2-31

232 Topsoil and Subsoil Removal 2-32

232.100 Topsoil Removal and Segregation 2-32
232.200 Poor Topsoil 2-34

TABLE OF CONTENTS (Continued)

Section — Page

232.300 Thin Topsoil 2-34
232.400 Minor Disturbances Not Requiring Topsoil Removal 2-34

Small Structures 2-34
Vegetation 2-34

232.500 Subsoil Segregation 2-34
232.600 Timing 2-34
232.700 Topsoil and Subsoil Removal Under Adverse Conditions 2-35

Conventional Machines 2-35
Substitute Topsoil 2-35

233 Topsoil Substitutes and Supplements 2-35

233.100 Overburden Materials Supplementing and/or Replacing Topsoil 2-35
233.200 Suitability of Topsoil Substitutes and Supplements 2-35
233.300 Physical and Chemical Analyses 2-36

Certification of Reclamation Topsoil Suitability 2-37

233.400 Testing of Substitute Topsoil 2-38

234 Topsoil Storage 2-38

234.100 Topsoil Stockpiling 2-38
234.200 Stockpiled Topsoil 2-38

Stable Stockpile Site 2-38
Protection from Contaminants and Compaction 2-38
Wind and Water Erosion Protection 2-39
Topsoil Redistribution 2-39

234.300 Topsoil Stockpile Relocation 2-39

Host Site 2-40
Topsoil Suitability 2-40

TABLE OF CONTENTS (Continued)

Section — Page

240 RECLAMATION PLAN 2-40

241 General Requirements 2-40

242 Soil Redistribution 2-40

242.100 Soil Redistribution Practices 2-40

Soil Thickness 2-40
Compaction 2-41
Erosion 2-41

242.200 Regrading 2-42
242.300 Topsoil Redistribution on Impoundments and Roads 2-42

243 Soil Nutrients and Amendments 2-42

244 Soil Stabilization 2-43

244.100 Protection and Stabilization of Surface Areas 2-43
244.200 Mulch Application 2-43
244.300 Rills and Gullies 2-43

Post Mining Land Use and Revegetation 2-43
Water Quality 2-43

250 PERFORMANCE STANDARDS 2-44

251 Topsoil, Subsoil, and Topsoil Supplements Management 2-44

252 Stockpiled Topsoil and Subsoil 2-44

REFERENCES 2-45

LIST OF TABLES

Table

2-1 Selected Dugout Canyon Mine Soil Analytical Data 2-9

2-2 Topsoil and Substitute Topsoil Volumes 2-33

LIST OF PLATES

Plate

2-1 Native Soil Types Present in Dugout Canyon Mine Permit Area

2-2 Disturbed Area Soils Map

2-3 Dugout Canyon Mine Soil Stockpile Location at Soldier Canyon Mine

LIST OF APPENDICES

Appendix

2-1 Prime Farmland Determination Documents

2-2 Soil Conservation Survey Descriptions of the Permit Area Soils

2-3 Soil Test Pit Logs

2-4 Results of Laboratory Analyses

2-5 Soil Removal from within the Culvert Expansion Area

2-6 Topsoil, Substitute Topsoil, and Storage Pile Calculations

2-7 Topsoil Storage Area Expansion

2-8 Gilson Well Site Soils Study and Soil Volume Calculations

2-9 Pace Canyon Fan Facilities Topsoil and Storage Pile Calculations

CHAPTER 2
SOILS

210 INTRODUCTION

This chapter and associated appendices of this M&RP contain all pertinent information relating to identification, management, and reclamation activities associated with the soil resources present in the disturbed area of the Dugout Canyon Mine and the Pace Canyon Fan Portal Breakout. The information has been compiled from the previously approved soil sections for the Sage Point-Dugout Canyon Mine and Soldier Canyon Mine permits, ACT/007/009 and ACT/007/018, respectively, as well as new soil survey information gathered as part of this permit application. The soil studies were conducted in accordance with the Utah Division of Oil, Gas, and Mining guidelines that were in effect at the time each study was conducted. All previous surveys fulfilled the requirements established by the U.S. Soil Conservation Service (SCS). The site specific soil survey conducted for this permit application was conducted in accordance with the standards set by the National Cooperative Soil Survey and analyzed by horizon according to Table 1 of the Division's "Guidelines for the Management of Topsoil and Overburden for Underground and Surface Coal Mining" (Leatherwood, 1988).

Additional information can be found in the following amendments: Methane Degassification Amendment (August 2003), Refuse Pile Amendment (February 2003), and the Leachfield Addendum A-1 (March 2001). The remainder of the State Lease ML-48435-OBA (SITLA Lease) was incorporated into the Dugout Canyon Mine permit area in 2005.

A base map of the soils in the permit area has been created by compiling maps from the "Soil Survey of Carbon Area, Utah" prepared by the SCS (Jensen, 1988). The base map illustrates the locations and areal extent of the endemic soil resources within the permit area at an Order III level (Plate 2-1). In the disturbed area of the permit area, an Order I survey was conducted. The locations and areal extent of the endemic soil resources within the disturbed area identified during the Order I survey are illustrated on Plate 2-2.

This chapter provides a description of the pre-mining resources as specified under R645-301-221. Topsoil and subsoil to be saved under R645-301-232 will be removed and segregated from other material. After removal, topsoil will be immediately redistributed in accordance with R645-301-242, stockpiled pending redistribution under R645-301-234, or if demonstrated that an alternative procedure will provide equal or more protection for the topsoil, the Applicant will seek approval from the Division.

220 ENVIRONMENTAL DESCRIPTION

The Dugout Canyon Mine facilities are is located in the northern Book Cliffs - Roan Plateau region. More specifically, the mine is located within Dugout Canyon and Pace Canyon. The majority of the disturbed area is located in Dugout Canyon, with fan portal facilities located in Pace Canyon (Plate 2-1 and PC5-2). The elevation of the disturbed area ranges between approximately 7000 and 7150 feet above MSL. Soils in the mine area are not cultivated due to their thin nature and relatively steep slopes on which they lie. These soils have formed in colluvium derived from sandstone and shale. Soils in the area are usually shallow and consist predominantly of stony to gravelly sandy loams with moderate permeability. The soils are highly susceptible to water erosion. Rock outcrops consist of alternating layers of sandstone and shale. Subordinate amounts of coal are also present.

The Pace Canyon Fan Portal Breakout is located in Pace Canyon (T13S. R13E, Section 30, N1/2NW14). The elevation of the disturbed area ranges between approximately 6950 and 7060 feet above MSL. Soils in the mine area are not cultivated due to their thin nature and relatively steep slopes on which they lie. These soils have been previously disturbed by various activities in the canyon, such as road construction, exploration, mining, logging, etc. The fan area encompasses steep rocky canyon walls with unconsolidated sediment benches.

221 Prime Farmland Investigation

As part of the application for the Sage Point-Dugout Canyon Mine permit, ACT/007/009, a reconnaissance of the disturbed areas was conducted in 1980 to determine if prime farmland was present, and if present, whether it would be impacted by mining activities. The reconnaissance included the presently-proposed disturbed area within the Dugout Canyon Mine permit area. Copies of the applicable pages from the prime farmland investigation for the Sage Point-Dugout Canyon Mine permit and correspondence with the Soil Conservation Service have been included as Appendix 2-1. One area within the previous area of investigation was determined to potentially be prime farmland. However, this area was located near the mouth of Soldier Creek Canyon, outside of the presently proposed permit area. No prime farmland was found in Dugout Canyon or anywhere else within the presently-proposed permit area during the previous investigation.

As part of this permit application, a survey of the disturbed area of the Dugout Canyon Mine was conducted to determine whether the soils could be considered as prime farmland. The Dugout Canyon Mine disturbed area lies within the Rock outcrop-Rubbleland-Travessilla complex and Croydon loam soils area (Plates 2-1 and 2-2). Neither of these soils are considered suitable prime farmland as described by the SCS (Jensen, 1988). No evidence of past cultivation of the soils in the disturbed area was found during the site investigation. Hence, based on the results of both detailed investigations conducted within the area, it is concluded that no prime farmland exists within the proposed permit area.

The survey for prime farmland investigation for the fan portal site was completed by Leland Sasser of the NRCS. The area planned for disturbance is not considered prime farmland. Refer to Appendix 2-1 for a copy of Mr. Sasser's letter.

222 Soil Survey

Soil survey information for those portions of the permit area to be affected by surface operations at the Dugout Canyon Mine is presented in Sections 222.100 through 222.300.

222.100 Soils Map

A map delineating the areal extent of the endemic soils resources within the permit area at an Order III survey level is presented on Plate 2-1. A description of these soils has been reproduced from the SCS "Soil Survey of the Carbon County Area" (Jensen, 1988), and has been included as Appendix 2-2. An Order I soil survey was conducted of the Dugout Canyon Mine disturbed area in October and November 1995. Plate 2-2 illustrates the areal extent of the soils studied as part of the Order I soil survey, the location of the soil test pits excavated during the survey, and the extent of the identified soils.

Dan Larsen , Soil Scientist performed a survey of the Fan Portal area in 2003 and 2004. The 2003 survey was done in conjunction with a BLM environmental assessment for coal exploration holes. The 2004 survey was done on November 5, in conjunction with the proposed installation of the fan. A copy of the 2004 survey, test pit logs and a map showing the location of 2003 -2004 test pit locations is in Appendix 2-3.

222.200 Soil Identification

Following is a list of the soils found in and adjacent to the permit area. Their corresponding map units as illustrated on Plate 2-1 are also listed.

Map Unit	Soil Identification
3	Badland-Rubbleland-Rock outcrop complex
6	Beje-Comodore complex
7	Beje-Trag complex
13	Cabba family-Guben-Rock outcrop complex
21	Croydon loam, 8 to 30 percent slopes
23	Curecanti family - Pathead complex
32	Frandsen-Gullied land complex
33	Gerst-Badland-Rubbleland complex, 15 to 50 percent slopes
36	Gerst-Strych-Badland complex, 3 to 50 percent slopes
37	Gerst-Strych-Badland complex, 50 to 70 percent slopes

46	Guben-Pathead extremely stony loams
47	Guben-Rock outcrop complex
50	Haverdad loam, moist, 1 to 5 percent slopes
52	Hernandez family, 3 to 8 percent slopes
53	Hernandez family, moist, 1 to 6 percent slopes
62	Midfork family-Comodore complex
66	Mivida gravelly fine sandy loam, 3 to 8 percent slopes
72	Pathead-Corecanti family association
75	Perma family, 15 to 40 percent slopes
81	Persayo-Greybull complex
84	Podo-Rock outcrop complex
86	Rabbitex-Doney family-Midfork family complex
88	Rabbitex family-Datino Variant complex
96	Rock outcrop-Rubbleland-Travessilla complex
97	Rottulee family-Trag complex
100	Senchert loam, 3 to 15 percent slopes
101	Senchert loam, 30 to 50 percent slopes
103	Senchert-Toza family complex
105	Senchert family-Senchert complex
107	Supert-Winetti complex
109	Silas-Brycan loams
113	Strych very stony loam, 3 to 15 percent slopes

According to the SCS (Jensen, 1988), soils present on the east facing slopes of Dugout Canyon are part of the Rock outcrop-Rubbleland-Travessilla complex while those on the west facing slopes are part of the Croydon loam and Midfork family-Comodore complex.

However, observation of the soils present on the west and northwest facing slopes suggest that inclusions of the Comodore-Datino Variant complex are prevalent throughout. The conclusion that Comodore-Datino Variant complex soils are present in this area is based on the presence of characteristics typical of these soils such as: 40 to 60 percent slopes, elevations of slopes between 6800 and 8100 feet, 40 to 60 percent slopes, Douglas-fir and related vegetation, and very stony, relatively shallow soils. A telephone conversation between Mr. Chris D. Hansen of Canyon Fuel Company, LLC, Ms. Vicky Bailey of EarthFax Engineering, Inc. and Mr. Leland Sausser of the Natural Resources Conservation Service concerning the presence of Comodore-Datino Variant complex soils within areas mapped as Croydon loam occurred on March 3, 1998. Mr. Sausser

briefly reviewed available maps and photos and agreed that this may indeed occur but the maps in the Soil Survey of Carbon Area, Utah (Jensen, 1988) are generally correct as published.

Soils present in the narrow V-shaped Dugout Canyon that lie within the disturbed area of the mine have been identified and characterized. A large portion of the mine area is covered with overburden that consists of soil mixed with coal waste and/or waste rock from previous mining operations at the site. In these areas, the original soil structure has been obliterated or the native soils have been deeply covered. The remainder of the disturbed area has soils that appear to be in-place or have been only slightly disturbed. The approximate boundary between the overburden and in-place and/or slightly disturbed soils is illustrated on Plate 2-2. The overburden has been labeled on Plate 2-2 as OB while the in-place soils have been labeled as TS.

The overburden is a mixture of rock and/or coal waste with Travessilla soils. The Travessilla soils are classified as loamy, mixed (calcareous) mesic, Lithic Ustic Torriorthents (Jensen, 1988). Soil type TS is a loamy, mixed, Typic Haploboroll.

In Pace Canyon the site is mapped as being soil map Unit 96 and the adjacent soils being map Units 21, 84 and 97 (SCS, 1988).

222.300 Soil Description

The description of the soils has been based on the following information: taxonomic classification, horizon name and depth, color, texture (percent sand, silt, and clay), class, structure, percent rock fragments and organic matter, pH, EC, and solubility of calcium, magnesium, and sodium. This information is included in the soil test pit logs in Appendix 2-3 and the lab data sheets included in Appendix 2-4. The description of soils outside the disturbed area boundary or on the steep slopes within the boundary have been taken from the SCS (Jensen, 1988).

Overburden. The overburden (disturbed soils) are located both east and west of Dugout Creek in areas where previous mining activities have occurred (Plate 2-2). Much of the Dugout Canyon

Mine disturbed area is covered with overburden. Four test soil pits, TP-2, 3, 9, and 11 were excavated in overburden areas and their locations are illustrated on Plate 2-2. The overburden material could loosely be termed a "gravelly loam" that generally consist of loam mixed with coal debris, wood fragments, bricks and rock. The rock concentration varies between 10 and 40 percent and varies in size from gravel to boulder. Rock fragments are composed of sandstone with some siltstone blocks. This material is found in the relatively flat areas and on most of the steep slopes; is moderately well drained; and supports sagebrush, juniper, rabbit brush, and a variety of grasses. Thickness of this material varies from a few feet to more than eight feet. Select samples of the soil mixed with the rock were obtained and analyzed for the following parameters.

pH
Electrical Conductivity (EC)
Saturation Percent
Calcium (soluble)
Magnesium (soluble)
Sodium (soluble)
Sodium Absorption Ratio (SAR)
Total Sulfur
Acid/Base Potential
Total Organic Carbon
Phosphate
Nitrogen (nitrate)
Boron
Selenium
Available Sodium
Exchangeable Sodium
Alkalinity
Total Kjeldahl Nitrogen
Water Holding Capacity
Percent Coarse Fragment, Sand, Silt, and Clay

Results of the laboratory analyses of the samples have been summarized in Table 2-1.

A typical profile of this overburden was compiled from the soil descriptions from three soil test pits TP-2, TP-3, and TP-11. A fourth pit, TP-9, was excavated adjacent to the mine access road in an area labeled as overburden. However, within a few feet of ground surface and beneath the road

base, the material appeared to be undisturbed. Therefore, the information from this pit was not used to describe the overburden present at the mine.

The overburden consists of very dark gray (2.5Y 3/1) loam mixed with coal, wood, gravel, and cobble from 0 to 3 feet. The loam is dry to slightly damp, slightly alkaline with an average pH of 7.3, and an average concentration of the following parameters: EC value of 0.38 mmhos/cm, soluble calcium concentration of 1.78 meq/l, soluble magnesium concentration of 1.47 meq/l, soluble. sodium concentration of 0.51 meq/l, SAR value of 0.40, acid/base potential of 72.3 tons of calcium carbonate/tons of material, boron concentration of 0.42, selenium concentration less than 0.02 ppm, and water holding capacity of 8.6%. The percentage of rock is approximately 20% or more. This unit overlies brown (7.5YR 4/4) to dark grayish brown (10YR 4/2) loam with some coal waste, gravel and cobbles, and some wood fragments. This underlying unit extends to depth of at least eight feet in portions of the disturbed area. The concentration of coal waste appears to decrease with depth while rockiness increases. The percentage of rockiness ranges from 20 to 40%. The loam is dry to moist, slightly alkaline with a pH of 7.4, has an EC value of 0.37 mmhos/cm, soluble calcium concentration of 1.10 meq/l, soluble magnesium concentration of 2.00 meq/l, soluble sodium concentration of 0.50 meq/l, an SAR value of 0.40, an acid/base potential of 16.6 tons of calcium carbonate/tons of material, a boron concentration of 0.48 ppm, a selenium concentration less than 0.02 ppm, and a water holding capacity of 7.9%.

Soil Type TS. Soil type TS is found on both sides of Dugout Creek in the northeastern portion of the disturbed area and in the southwestern portions of the disturbed area by the sediment pond (Plate 2-2). TS soils in the sediment pond area appear to have been previously disturbed, resulting in the mixing of the soil horizons. The TS soils are found in flat lying areas and on slopes with grades up to 40% or more (Plate 2-2). The soil supports vegetation consisting of sagebrush, cottonwood, gambel oak, grass, pinyon, and fir. This soil consists of well drained soils that have formed in colluvium and residuum from sandstone, siltstone, and shale. Samples from this soil were obtained from soil pits TP-1, 4, 5, 6, 7, and 8. Soil test pits 14 and 14A were excavated and described and soil thickness were used to estimate available borrow material. However, soil

sample analysis results are not available for TP-14 and TP-14A and, therefore, have not been included in the M&RP. The samples obtained from TP-1, 4, 5, 6, 7, and 8 were analyzed for the same parameters listed for the overburden samples. Results of the analyses are summarized in Table 2-1. This soil type is undoubtedly a unit of the Datino Variant (Jensen, 1988).

The following description of the TS soil has been condensed from the information from soil test pit TP-4, TP-6 and the lower sections of TP-1. Similar soils were found in TP-5 and TP-8 but portions of the soil profile appeared to have been reworked by Dugout Creek. Also, the upper four feet of the soil profile in TP-1 appear to have been disturbed.

The TS soil generally has a surficial O1 horizon that is approximately 1 inch thick and is comprised of leaves, twigs, roots, silt, and sand. No samples of this horizon were obtained for analysis.

The A1 soil horizon occurs from 1 inch to a depth of 5 inches. This soil horizon is a gravelly loam composed of approximately 50% sand, 35% silt, and 15% clay; rock fragments compose about 36% (gravels) of its volume. The A1 horizon has a dark gray color (10YR 3/1) when moist. The soil is slightly acidic with a pH of 6.9 and has an EC value of 0.52 mmhos/cm, soluble calcium concentration of 4.30 meq/l, soluble magnesium concentration of 0.91 meq/l, soluble sodium concentration of 0.30 meq/l, an SAR value of 0.19, an acid/base potential of 78.4 tons of calcium carbonate/tons of material, a boron concentration of 0.51 ppm, a selenium concentration less than 0.02 ppm, and a water holding capacity of 11.4%.

The A1 soil is underlain by a very dark gray (10YR 3/1) B2 soil horizon. The B2 soil occurs at a depth of 5 to 14 inches. It is also a gravelly loam with approximately 48% sand, 35% silt, and 17% clay. Rock fragments compose about 30% by volume (gravel) of this soil horizon. The soil has a neutral acidity/alkalinity with a pH of 7.0 and has an EC value of 0.53 mmhos/cm, soluble calcium concentration of 3.84 meq/l, soluble magnesium concentration of 1.24 meq/l, soluble sodium concentration of 0.35 meq/l, an SAR value of 0.22, an acid/base potential of 79.0 tons of calcium carbonate/tons of material, a boron concentration of 0.63 ppm, a selenium concentration less than 0.02 ppm, and a water holding capacity of 9.8 %.

The B2 soil is underlain by a dark yellowish brown (10YR 4/4) B3 soil horizon. The B3 soil occurs at a depth of 14 to 28 inches. It is a gravelly sandy loam with approximately 53% sand, 32% silt, and 15% clay. Rock fragments compose about 22% by volume (gravel) of this soil horizon. The soil is slightly alkaline with a pH of 7.2 and has an EC value of 0.36 mmhos/cm, soluble calcium concentration of 2.25 meq/l, soluble magnesium concentration of 1.02 meq/l, soluble sodium concentration of 0.38 meq/l, an SAR value of 0.30, an acid/base potential of 115 tons of calcium carbonate/tons of material, a boron concentration of 0.88 ppm, a selenium concentration less than 0.02 ppm, and a water holding capacity of 6.5%.

The B3 soil is underlain by a pale brown (10YR 6/3) to brown (10YR 4/3) C soil horizon. The C soil occurs at 28 inches to at least 9 feet in the area of TP-4 and TP-5. It is typically a gravelly sandy loam to cobbly sandy loam. The sand and coarse fraction increase with depth. A sample of the C horizon was obtained from TP-1 for analysis. The results indicate that the soil is slightly alkaline with a pH of 7.4 and has an EC value of 0.29 mmhos/cm, soluble calcium concentration of 1.59 meq/l, soluble magnesium concentration of 0.89 meq/l, soluble sodium concentration of 0.41 meq/l, an SAR value of 0.37, an acid/base potential of 78 tons of calcium carbonate/tons of material, a boron concentration of 0.12 ppm, a selenium concentration less than 0.02 ppm, and a water holding capacity of 5.3%.

Croydon loam, 8 to 30 percent slopes. This loam has been mapped by the SCS (Jensen, 1988) as being present on the west, north, and east facing slopes of lower Dugout Canyon and it tributaries. According to the SCS (Jensen, 1988), this unit generally consists of a surface layer of dark yellowish brown and yellowish brown loam about 16 inches thick. The subsurface layer is approximately 7 inches of very pale brown loam. The subsoil to a depth of 48 inches is light yellowish brown clay loam over weathered sandstone. Vegetation typically consists of quaking aspen, blue wildrye, slender wheatgrass, peavine, bearded wheatgrass, and silver sagebrush. The soil is typically found at elevations between 7800 to 9500 feet. A description of the Croydon loam has been included in Appendix 2-2.

Comodore-Datino Variant complex. This soil type appears to be present as inclusions within areas mapped by the SCS (Jensen, 1988) as Croydon loam on the west facing slopes of Dugout Canyon. This unit is 50 percent Comodore very stoney fine sandy loam, moist, 50 to 60 percent slopes; 35 percent Datino Variant extremely stoney fine sandy loam, 40 to 60 percent slopes; and 15 percent other soils. The Comodore soil is on the side slopes while the Datino Variant is on the toe slopes. The Comodore is shallow and well drained. It formed in colluvium derived dominantly from sandstone and shale. The Datino Variant soil is very deep and well drained. It formed in colluvium derived dominantly from sandstone and shale. A description of the Comodore and Datino Variant units has been included in Appendix 2-2.

Rock outcrop-Rubbleland-Travessilla complex. This soil type is present on the east facing slopes of Dugout Canyon and Pace Canyon. It is 35 percent Rock outcrop; 30 percent Rubbleland; 25 percent Travessilla very gravelly fine sandy loam, 30 to 70 percent slopes; and 10 percent other soils. The Rock outcrop is typically exposed sandstone. Rubbleland is areas of stones and boulders that are virtually free of vegetation. The Travessilla soil is shallow and well drained. It formed in residuum and colluvium derived dominantly from sandstone. A description of the Travessilla complex soil has been included in Appendix 2-2.

222.400 Soil Productivity

In areas where soils have been significantly disturbed by previous mining activities, the soils have lost their native identities and now typically contain waste rock and/or coal waste. As discussed in Section 222.300, these soils are referred to as overburden. Analysis of the loam within the overburden indicates that this material, with proper treatment, could be considered as productive soil. As illustrated in Table 2-1, with the exception of the percentage of rock fragments, the overburden has physical and chemical properties that are within the current "acceptable range" for the parameters listed on Table 2, "Overburden Evaluation for Vegetative Root Zone" which is contained in the Division's "Guidelines for Management of Topsoil and Overburden for Underground and Surface Coal Mining" (Leatherwood, 1988). The treatments proposed to improve the productivity of the overburden are discussed in Section 224.

The undisturbed or slightly disturbed soils in the mine area currently sustain good vegetative cover. The results of the soil analyses indicate these soils also have physical and chemical characteristics that are within the Division's "acceptable range" for vegetative root zones (Leatherwood, 1988). Vegetation associated with these soils and the overburden is discussed in Chapter 3 of this M&RP. Refer to Section 321.100 which contains 1996 reported living cover percentages, representative of the productivity of the land prior to this mining operation.

The majority of the soils at the fan portal site have been significantly disturbed by previous activities, the soils have lost their native identities and now typically contain a percentage of coal and waste rock. The site soils to be striped and used as topsoil are representative of the area and there is no evidence of any unusual properties that would cause problems with reclamation revegetation. Vegetation associated with these fan portal area soils is discussed in Chapter 3 of this M&RP and in the report prepared by Mt. Nebo Scientific (April 2004) located in Appendix 3-4.

223 Soil Characterization

The soil survey described in this chapter was performed in accordance with the standards of the National Cooperative Soil Survey.

224 Substitute Topsoil

SCM proposes to use the soils from the water tank area, coal storage area, the sediment pond area and the slope between the sediment pond and facilities pad as substitute topsoil/growth media during reclamation in Dugout Canyon. This material will be used, in conjunction with topsoil salvaged and stored during the operational phase of the mine, for reclamation of the disturbed area. Waste will be segregated from the material. Material heavily contaminated with coal waste will not be used as substitute topsoil but will be properly disposed of. It is anticipated that during the reclamation of the disturbed area, approximately 6,504 CY of substitute topsoil could be generated from the overburden within the facilities areas (Area #1, Plate 2-2). The material from these areas would only be utilized for substitute topsoil after they have been deemed suitable for use. The

suitability of the soils will be determined through sampling and analysis as discussed in Section 233.200. It is important to note that the potential volume of material from this area has not been included in the calculations of available topsoil/growth media presented in Section 242.

The B anc C horizon soils from the area adjacent to the water tank area and west slope of Dugout Creek (Area #2, Plate 2-2), coal storage area (Area #3, Plate 2-2), and the sediment pond area and the slope between the pond and facilities area (Area # 4A, Plate 2-2), will also be used as substitute topsoil material. As discussed in Section 222.400, with the exception of the coarse fragment concentration, the physical and chemical properties of the overburden and B and C horizon soils fall within the current "acceptable range" for substitute topsoil (Leatherwood, 1988). At the time of final reclamation, these soil resources will be supplemented with appropriate fertilizers and amendments (Section 230).

Pace Canyon fan portal site will be reclaimed with soils salvaged at the site prior to construction, as noted above the site is previously disturbed and the majority of the soils contain coal and waste rock.

230 OPERATION PLAN

231 General Requirements

231.100 Removing and Storing Soil Methods

The Dugout Canyon Mine area has been the site of infrequent mining activities since 1925. At the time of the initial disturbances, topsoil was apparently not salvaged. Therefore, only a small percentage of the mine area can be considered undisturbed. As illustrated on Plate 2-2, much of the area is covered with overburden. The methods described for topsoil salvage herein will be followed when removing and storing soil resources necessitated as a result of construction of new surface operations in undisturbed areas.

In the areas designated on Plate 2-2, soil salvage will take place where disturbances are anticipated to occur or where removal of the resource would provide the best method of protection. Where possible, the removal of salvaged soils will be as follows: the first lift will include the A horizon material (topsoil) and the second lift will include the B and C horizons. Each of these lifts will be stored as noted in Section 231.400. These materials will be stored in stockpiles graded to maximum slopes of 2:1 and seeded to promote surface stabilization. The seed mix to be used will be the interim seed mix described in Chapter 3.

In Area #2 , the operator will endeavor to remove and store as much topsoil and/or substitute topsoil as possible. Material suitable for reclamation removed from this area will be stored in the designated topsoil stockpile.

The soils removed as part of the Dugout Creek culvert construction will be handled by first removing the large or coarse vegetation (i.e. trees and thick shrubs), followed by removal of the topsoil and remaining vegetation, then finally the removal of the underlying horizons. The soils removed during culvert construction and labeled as Area #5 on Plate 2-2 will be stored either separately from soils salvaged from the remainder of the area or within a designated location of the stockpile. Soils present on steep slopes will be removed as part of the culvert construction process only where doing so does not jeopardize the stability of the entire slope within or outside the disturbed area boundary or create safety hazards during culvert installation. Decisions regarding the removal of soil from steep slopes will be made in the field by a qualified soils scientist in agreement with the construction supervisor. This decision will be made based on the steepness of the slope, the potential for slope failure uphill of the disturbed area if soils are removed at the slope toe, and the timing within the construction sequence (i.e. can backfill be placed against the slope immediately after topsoil is removed to support the slope). Additional information regarding the location of the steep slopes and the areas of soil removal associated with the construction of the Dugout Creek culvert is provided in Appendix 2-5. After construction of the culvert, an as-built map will be submitted illustrating the locations where steep slope soils were removed.

In areas where topsoil thicknesses of less than 6 inches are encountered, the topsoil and underlying unconsolidated materials will be removed and stockpiled together, including the soil salvaged in Pace Canyon during construction of the fan portal site. The entire mixture will be treated as topsoil in compliance with R614-201-234.300. The recovery of topsoil and substitute topsoil will be maximized in both disturbed and undisturbed soils.

The substitute topsoil generated during mine construction, as discussed in Section 224, will be treated as topsoil and stored accordingly.

No facilities will be constructed and no soil disturbance is planned in conjunction with the incorporation of the SITLA lease (T13S R13E, Section 29, Portions of Section 17, 20, 21, 28 and 30) into the Dugout Canyon Mine permit area.

231.200 Suitability of Topsoil Substitutes/Supplements

See Section 233.200.

231.300 Testing of Topsoil Handling and Reclamation Procedures Regarding Revegetation

SCM will exercise care to guard against erosion during and after application of topsoil and will employ the necessary measures to ensure the stability of topsoil on graded slopes. Erosion control measures will include surface roughing and erosion mat placement on slope areas thought to be unstable. SCM will fill, regrade, or otherwise stabilize any rills or gullies deeper than nine (9) inches which form in areas which have been regraded and topsoiled. The areas adjacent to any rills or gullies which have been filled, regraded or otherwise stabilized, will be reseeded or stabilized accordingly.

Methods used to evaluate success of Revegetation and stabilization are discussed in Chapters 3 and 5.

231.400 Construction, Modification, Use, and Maintenance of Topsoil Storage Piles

Topsoil and substitute topsoil removed from the Dugout Canyon Mine will be transported and stockpiled at the Soldier Canyon Mine soils stockpile area (Plate 2-3). The estimated volumes of topsoil and substitute topsoil to be stockpiled are presented in Table 2-2.

It is anticipated that the pile will be constructed in horizontal lifts of 1.5 to 2.0 feet. Tracked equipment will be used to reduce compaction. As described in Section 231.100, the stockpile will be graded to a maximum slope of 2:1 and seeded to promote surface stabilization. Some of the vegetation removed during the construction of the Dugout Canyon Mine will be incorporated into or placed on top of the stockpile. The interim reclamation seed mix described in Chapter 3 will be used for this purpose. Volume calculations for the amount of topsoil to be removed and placed in the storage pile are included in Appendix 2-6.

The Dugout Canyon Mine topsoil will be labeled and kept separate from the Soldier Canyon Mine soils. A description of the Soldier Canyon Mine topsoil stockpile area can be found in that M&RP. The Soldier Canyon Mine M&RP will be modified to allow for the storage of Dugout Canyon Mine substitute topsoil prior to the transport of the soil. The stockpiles will be isolated from the main surface area to protect the material from contaminants and unnecessary compaction that would interfere with vegetation. A sign will be installed at the base of each stockpile to identify it as a topsoil storage area. The stockpiles will be protected from wind and water erosion by being revegetated with a quick growing vegetative cover (proposed interim reclamation seed mix) and by installing berms and/or silt fence below the stockpiles to help trap sediment coming off the stockpile. These stockpiled soils will not be moved or disturbed until required for redistribution during final reclamation.

A portion of the topsoil/growth medium salvaged from the Pace Canyon fan portal site will be stockpiled at the site (Plate PC5-2). Approximately 3,192 cubic yards of topsoil will be stripped from the site. Two topsoil stockpiles have been designed to hold approximately 1,206 cubic yards. The

additional soil will be stored at the Dugout Canyon Mine topsoil storage area. Topsoil volume calculations and topsoil stockpile design calculations can be found in Appendix 2-9.

232 Topsoil and Subsoil Removal

232.100 Topsoil Removal and Segregation

All topsoil thicker than 6 inches will be removed as a separate layer from the subsoil, segregated, and stockpiled separately, if necessary. Topsoil less than 6 inches thick will be removed according to Section 232.300.

Soil from the Dugout Creek channel walls removed during culvert construction will be stored separately from soils removed from other areas within the disturbed area or within designated areas of the stockpile.

Soils salvaged during the construction of the small substation pad will be handled as described withing this chapter. The majority of the area designated for the pad has the soils salvaged during initial construction of the mine site. The potential area of additional disturbance is approximately 25 square feet. The slope remaining once the soil from the additional disturbance is salvaged will be restored to approximately 2:1 and then seeded with the interim seed mix.

If during construction activities additional topsoil is found, this material will be removed and stockpiled for use during reclamation activities. It is likely that material will be found in some areas marked on Plate 2-2 as OB.

As requested by the Division, a non-biased, third party, professional soil scientist will be on-site when available at the Dugout Canyon Mine facilities during soil salvage to monitor and supervise soil salvage operations for the purpose of maximizing soil salvage volumes and quantities.

At the Pace Canyon fan portal site, the topsoil and underlying unconsolidated materials will be removed and stockpiled together. The entire mixture will be treated as topsoil in compliance with R614-201-234.300. The recovery of topsoil/growth medium will be maximized at the site.

TABLE 2-2

TOPSOIL AND SUBSTITUTE TOPSOIL VOLUMES

AREA	MATERIAL TYPE	VOLUME
NORTHWEST FACILITIES AREA (AREA 2)	TOPSOIL/OVERBURDEN	1,653 CY
COAL STORAGE AREA (AREA 3)	TOPSOIL/SUBSOIL	4,869 CY
SEDIMENT POND, SLOPE AREA, AREAS BETWEEN ROAD AND CREEK (AREAS 4, 6, 7)	TOPSOIL/SUBSOIL	20,118 CY
WATER TANK AREA (AREA 8)	TOPSOIL/SUBSOIL	247 CY
SLOPE EAST OF COAL STORAGE PILE (AREA 9)	TOPSOIL/SUBSOIL	333 CY
GILSON WATER WELL*	TOPSOIL/SUBSOIL	200 CY
SMALL SUBSTATION	TOPSOIL/SUBSOIL	30 CY (Approx.)
	TOTAL	27,450 CY

* Refer to Appendix 2-8 for volume calculations and location of soil.

232.200 Poor Topsoil

Topsoil that is of an insufficient quantity, or of poor quality (for sustaining vegetation) will be removed as a separate layer and segregated. Such operations will be done with approval of the Division, and in compliance with R614-301-233.100 (Section 233.100).

232.300 Thin Topsoil

Topsoil to be removed that is less than 6 inches thick will be removed with the immediately underlying unconsolidated materials. This material mixture will be treated as topsoil.

232.400 Minor Disturbances Not Requiring Topsoil Removal

Small Structures. Topsoil will not be removed prior to construction that would result in only minor disturbances. Such construction activity includes work on small structures such as power poles, signs, fence lines, and other small structures.

Vegetation. The operator will not remove topsoil for minor disturbances where such activity will not destroy vegetation or cause erosion.

232.500 Subsoil Segregation

The B and C soil horizons removed during construction of the site will be stockpiled as described in Section 231.400.

232.600 Timing

Soil removal will take place after all vegetation that could interfere with soil salvage has been removed. Surface disturbance activities will take place after the topsoil has been removed.

232.700 Topsoil and Subsoil Removal Under Adverse Conditions

In areas of surface disturbance, topsoil and subsoil will each be removed separately and segregated, except where natural conditions render operations hazardous or detrimental to soils outside the disturbed area. One location within the permit area where soil is to be removed under adverse conditions is in the area of the culvert. This has been discussed in more detail in Section 231.100.

Conventional Machines. In localities where steep grades, adverse terrains, severe rockiness, limited depth of soils, or other adverse conditions exist that render soil removal and segregation activities using conventional machines hazardous, soils will not be salvaged and stockpiled.

Substitute Topsoil. Importing of substitute topsoil is not anticipated (Section 224). However, it is anticipated that fill will be imported to the site during construction. This material will be sampled and analyzed for acid and toxic characteristics prior to placement. Material found to be acid- and/or toxic-forming will not be imported.

233 Topsoil Substitutes and Supplements

233.100 Overburden Materials Supplementing and/or Replacing Topsoil

Selected overburden materials will be used as a supplement to topsoil during reclamation operations. Where overburden materials are used, the operator commits to demonstrating to the Division prior to topsoil emplacement that the resultant soil is suitable for supporting Revegetation efforts.

233.200 Suitability of Topsoil Substitutes and Supplements

At the time the Dugout Canyon area was first mined, no topsoil was segregated and saved. Topsoil and other fill material was apparently used in construction of the surface facilities pads and roads.

Much of the topsoil appears to have been mixed with mining wastes (including the topsoil/growth medium in Pace Canyon). During the construction phase of the Dugout Canyon Mine facilities in Dugout Canyon, this material will be excavated and, where suitable, stockpiled for use as a topsoil substitute/growth media after treatment. The substitute topsoil/growth media will be placed after recontouring of the site has occurred during reclamation activities. The exact quantity of the substitute topsoil/growth media available for use is not known at this time but has been estimated to be at least 27,411 CY. Approximately 1,568 CY of soil will be removed during culvert construction. The majority of this soil will be returned to the channel area during final reclamation and will not be used in other areas unless excess material is available (Appendix 2-6). Soil will be placed in accordance with the methods described in Chapter 5 of this M&RP.

Fill that had been imported as part of the pad and culvert construction activities may be used as backfill against highwall and cutslopes and backfill during portal closure or in depressions to aid in the achievement of AOC. If the imported material is to be used as subsoil, it will be characterized in accordance with the Division's guidelines for topsoil and overburden. This characterization will occur at the time of reclamation.

The topsoil/growth medium salvaged at the Pace Canyon fan portal site will be characterized in accordance with the Division's guidelines for topsoil and overburden. This characterization will occur once topsoil salvage is completed. One sample will be taken from each permanent stockpile or for every 1200 cubic yards salvaged, whichever is greater.

233.300 Physical and Chemical Analyses

Physical and chemical analyses of the soil material will be conducted while generating substitute topsoil. Samples of the soils will be obtained after physical segregation has occurred. The rate of sampling will be one sample per every 500 CY (approximate) of material generated. Additional samples maybe obtained if the quality of the soils generated is questionable. This material will be analyzed for the following parameters. Reference Section 233.200 for Pace Canyon information.

pH
Electrical Conductivity (EC)
Saturation Percent
Calcium (soluble)
Magnesium (soluble)
Sodium (soluble)
Sodium Absorption Ratio (SAR)
Total Sulfur
Acid/Base Potential
Total Organic Carbon
Phosphate
Nitrogen (nitrate)
Boron
Selenium
Available Sodium
Exchangeable Sodium
Alkalinity
Total Kjeldahl Nitrogen
Water Holding Capacity
Percent Coarse Fragment, Sand, Silt, and Clay

The applicant will utilize the substitute topsoil for reclamation purposes only subsequent to approval by the Division.

Certification of Reclamation Topsoil Suitability. The suitability of the substitute topsoil will be certified by an approved laboratory in accordance with at least one of the following: Soil Conservation Service published data and technical guides, state agricultural agency, Tennessee Valley Authority, BLM - USFS published data, physical and chemical analyses results, field-site trials, or greenhouse tests.

233.400 Testing of Substitute Topsoil

Only the substitute topsoil used in lieu of, or in conjunction with, on-site overburden and topsoil will be tested as described in Section 233.300. Hereafter, references to topsoil will include substitute topsoil unless noted otherwise.

234 Topsoil Storage

234.100 Topsoil Stockpiling

Topsoil removed will be stockpiled for later use in reclamation operations when it is impractical to promptly redistribute the topsoil on regraded areas.

234.200 Stockpiled Topsoil

Stable Stockpile Site. Stockpiled materials will be placed on a stable site as described in Section 231.400.

Protection from Contaminants and Compaction. Stockpiled topsoil/growth media will be protected from contaminants and unnecessary compaction. To protect the topsoil/growth media from contaminants and unnecessary compaction that could interfere with vegetation, the stockpiles will be isolated (Section 231.400). A topsoil storage sign will be installed at the stockpiles.

Soils removed from the Dugout Canyon Mine will be stockpiled in the Soldier Canyon Mine topsoil stockpiles. The Dugout Canyon Mine soil stockpiles will be constructed in such a manner as to allow equipment access to the existing Soldier Canyon Mine soil stockpiles without causing disturbance to the Dugout Canyon Mine soils. Specifically, the piles will be separated by a distance great enough for equipment to access any stockpile. Furthermore, a continuous berm will be constructed around the stockpile to further separate the soils from the two mines. The berm will be constructed as specified in Appendix 7-9.

Cheat grass has apparently invaded much of the area adjacent to the designated Dugout Canyon Mine stockpile area. The operator will endeavor to maintain, to the extent possible, the stockpile's interim vegetation in a noxious weed- and cheatgrass-free state. Measures that can be taken to ensure this include treating areas with a commercially available selective herbicide that targets undesirable weeds and/or grasses. If infestations of undesirable vegetation are extensive, treatment of the infested areas with nonselective systemic herbicides may be necessary. If the later case occurs, the areas treated will be reseeded with the appropriate interim seed mix designated for the stockpile and/or adjacent disturbed area. Additionally, application of pre-emergent herbicides may be necessary to control cheatgrass and/or noxious weeds. Since pre-emergent herbicides can stop the germination of desirable vegetation, reapplication of these species may be necessary. The proper treatment method of the infested areas will be discussed with the Division prior to implementation.

Wind and Water Erosion Protection. All stockpiles will be protected from wind and water erosion by prompt establishment and maintenance of a vegetative cover. Berms will be constructed around the stockpile to help trap sediment runoff from the stockpiles.

The Pace Canyon fan portal site topsoil stockpiles will have a full containment berm (constructed of subsoil) around it capable of holding the 10-year, 24-hour storm event. The design of this full containment berm can be found at the end of the calculations in Appendix 7-12.

Topsoil Redistribution. All stockpiled soil will not be moved until redistributed during reclamation operations unless approved by the Division.

234.300 Topsoil Stockpile Relocation

Stockpiled soil in jeopardy of being detrimentally affected in terms of its quantity and quality by mine operations may be temporarily redistributed upon approval by the Division and modification of this M&RP.

Host Site. Soil relocation may occur provided that such action does not permanently adversely affect topsoil of the host site.

Topsoil Suitability. Stockpiled soil relocation may occur provided the material is retained in a condition more suitable for redistribution than if stockpiled.

240 RECLAMATION PLAN

241 General Requirements

Topsoil redistribution, amendments, and stabilization are discussed in Sections 242, 243, and 244, respectively.

242 Soil Redistribution

242.100 Soil Redistribution Practices

Within the disturbed area, any contaminated surface soil will be removed and stored during the final reclamation process. If the contaminated soils can not be rehabilitated, the material will be buried along with other contaminants. All backfill placed prior to topsoil and substitute topsoil spreading will be ripped or loosened by the methods described in this section and in Section 341.200 of this M&RP.

Soil previously removed from the Dugout Creek channel walls during culvert construction will be returned to the channel area during final reclamation, to the extent possible. If after construction and resoiling of the channel area an excess of "channel" soil exists, it will be appropriately distributed within the disturbed area to increase topsoil thicknesses.

Soil Thickness. The Dugout Canyon topsoil will be distributed to the disturbed areas illustrated on Plate 5-5. Topsoil will not be distributed on the primary road or the floor of the stream channel.

During reclamation, the topsoil will be allowed to settle and attain equilibrium with its natural environment. This procedure will be followed for all areas in which facilities such as ancillary road beds, mine pads, and building sites are to be abandoned.

Based on the results of the sampling and analysis of soil test pits TP-1, 4, 5, 6, 7, 8, and 9 and the description of pits 14 and 14A, approximately 27,411 CY of topsoil/growth media will be available to be distributed on reclaimed surfaces within the disturbed area boundary (Appendix 2-6). An estimated 14.7 acres within the disturbed area will receive topsoil. Based on the estimated quantity of available topsoil and the area to be covered, approximately 13.8 inches of topsoil will be placed in the reclaimed areas.

The Pace Canyon topsoil (approximately 18") will be distributed to the disturbed areas illustrated on Plate PC5-5. Topsoil will not be distributed on the realigned road segment or topsoil stockpiles. The area above the portal and the channel diversion area will have topsoil stripped and stockpiled immediately adjacent to these areas temporarily (Plate PC5-2). This topsoil will be surrounded with a silt fence for protection until the soil can be replaced, mulched, gouged and reseeded. The replacement will immediately follow the completion of construction of the portal and channel diversion. Plate 7-5A in Appendix 7-12, shows the location of soil/vegetation treatments at the fan facility.

Compaction. To prevent compaction of topsoil, soil moving equipment will refrain from unnecessary operation over spread topsoil. Front-end-loaders and other wheel mounted equipment may be used to transport and dump topsoil. However, to minimize compaction, only track-mounted equipment (e.g. bulldozers, trackhoes) will be used to spread the topsoil. The topsoil will be loosened prior to seeding as described in Section 341.200 of this M&RP.

Erosion. Care will be exercised to ensure the stability of topsoil on graded slopes to guard against erosion during and after topsoil application. Erosion control measures may include but not be limited to surface roughing and deep gouging.

242.200 Regrading

Since the Dugout Canyon mine area has been disturbed by previous mining activities, there are no private or public topographic maps which can be used to accurately determine the original geometric configuration of the canyon. Prior to topsoil redistribution, the disturbed area in Dugout and Pace Canyon will be regraded to agree with final reclamation topography (Chapter 5).

The surface will be ripped to between 6 and 24 inches where possible to reduce surface compaction, provide a roughened surface to assure topsoil adherence, and promote root penetration.

On slopes too steep to accommodate contour ripping with a tractor or other appropriate equipment, the surface will be roughened to between 6 and 24 inches with the teeth of a trackhoe bucket.

In the area of Dugout Creek, the soils removed during culvert construction will be returned and placed along the slopes of the reclamation channel. Where dictated by the design of the reclamation channel, the soils will be placed within the interstitial spaces of the riprap to promote the establishment of riparian vegetation. The soils placed outside the riprap portion of the channel area will be reseeded with the appropriate seed mix following soil preparation and roughening.

242.300 Topsoil Redistribution on Impoundments and Roads

The sedimentation pond and embankment will be dismantled and reclaimed with the other surface disturbed areas. Similarly, reclamation of abandoned roads will also follow the same technique as for other disturbed areas, except as noted.

243 Soil Nutrients and Amendments

Soil nutrients and amendments will be applied to the redistributed soil as necessary, to establish the vegetative cover. The type and rate of application will be determined just prior to final

reclamation activities based on analyses of samples collected from the stockpiled topsoils and substitute topsoils. The soils will at a minimum, be tested for pH, EC, total carbon, SAR, potassium, nitrate-nitrogen, and water holding capacity.

244 Soil Stabilization

244.100 Protection and Stabilization of Surface Areas

All reclaimed areas will be stabilized to control erosion by application of mulch, surface gouging, or other appropriate methods. Rills and gullies will be regarded. Reseeding will be accomplished using BTCA methods suitable for steep slope reclamation. Additional and more detailed discussions regarding topsoil protection during and after final reclamation can be found in Chapter 5. Methods of Revegetation to be employed at final reclamation at this site are discussed in more detail in Chapter 3.

244.200 Mulch Application

Mulch will be applied to all areas that have been regraded and covered with soil to stabilize the topsoil. For further discussion of Revegetation practices to be utilized, see Chapter 3 of this M&RP.

244.300 Rills and Gullies

Postmining Land Use and Revegetation. Rills and gullies that disrupt the postmining land use or reestablishment of vegetative cover will be regraded, the topsoil replaced, and reseeded.

Water Quality. Rills and gullies that contribute to the degradation of stream quality will be regraded, receive new topsoil, and be revegetated.

250 PERFORMANCE STANDARDS

251 Topsoil, Subsoil, and Topsoil Supplements Management

All topsoil, subsoil, and topsoil supplements shall be managed as outlined in Sections 230 and 240.

252 Stockpiled Topsoil and Subsoil

All stockpiled topsoil and subsoil will be managed according to plans outlined in Sections 230 and 240.

REFERENCES:

Jensen, E. H., and Borchert, J. W., 1988. Soil Survey of Carbon Area, Utah. Soil Conservation Service, United States Department of Agriculture, Washington D.C.

Johnson, Wm. M., 1975, Soil Taxonomy, A Basic System of Soil Classification For Making and Interpreting Soil Surveys, Supt. of Doc. S.C.S., Washington, D.C.

Leatherwood, J., and Duce, D., 1988. Guidelines for Management of Topsoil and Overburden for Underground and Surface Coal Mining. State of Utah Department of Natural Resources, Division of Oil, Gas and Mining.

APPENDIX 2-1

Prime Farmland Determination Documents

NRCS Natural Resources Conservation Service

NRCS Utah

United States Department of Agriculture

Natural Resources Conservation Service

Price Office
350 North 400 East
Price, Utah
84501

Phone:
435 637-0041

FAX
435 637-3146

December 3, 2004

Ms Vicky Miller
Dugout Canyon Mine
P.O. Box 1029
Wellington, Utah 84542

DEC 10 2004

RE: Soils (prime farmland) for Proposed Degas Well G-7, and surface facilities within Pace Canyon (T 13S., R13E., Sec 30 N1/2 of the NW1/4).

Dear Ms. Miller

After a site visit the Natural Resources Conservation Service has determined that there are no prime farmlands in the site area because the soils contain more than 10 percent surface rock fragments or the site has already been converted to non agricultural purposes or the percent slope x K (erodibility factor) exceeds 2.

If you need any further assistance please let us know.

Leland Sasser

Leland Sasser NRCS Soil Scientist

Cc: Michael J. Domeier State Soil Scientist

APPENDIX 2-3

Soil Test Pit Logs

Dugout Canyon Mine
Pace Canyon Ventilation Project

Soils Notes: D. Larsen (11/05/04)

The following are field notes from seven soil excavation points to evaluate soil resources at the ventilation fan and portal site in Pace Canyon. Soil pits were dug with a spade, and were intended for observation and documentation of soils available for salvage. Detailed soil descriptions were not taken. Colors are for a moist condition.

Site No. 1

Along the west side of the road near the portal site, toward the south end of the project area; toeslope between a rock ledge and the valley bottom.

0-3" 10YR3/2, very dark grayish brown; sandy loam

3-10" 10YR3/3, dark brown; loam

10-16" 10YR3/3 and 10YR3/4, dark brown with dark yellowish brown; loam

16-26" 10YR3/4, dark yellowish brown; cobbly loam

Very stony below 26 inches.

Site No. 2

At the base of the rock ledge near DUGP303; along the west edge of the project.

0-7" 10YR3/4-4/4, dark yellowish brown; stony sandy loam; weak, fine granular structure

7-14" 10YR4/4-5/4, dark yellowish brown; stony sandy loam

14" Sandstone bedrock

This site has pockets of soil intermingled with stones, boulders, and rock outcrop.

Site No. 3

Waste coal pile near the proposed fan site on the west side of the road; near the center of the pile.

About 36 inches of waste coal fragments that are mostly less than three inches in diameter. This appears to be about the maximum thickness of the coal and it decreases toward the edges. Underlying soil is yellowish brown sandy loam.

Site No. 4

At the geotechnical stake identified as Soil Hole #3; near the fan site on the west side of the road; toeslope.

0-3" Mixed soil and waste coal

3-33" 10YR3/3-4/3, dark brown to brown; sandy loam; weak, fine granular structure approaching structureless, massive; less than 5 percent rock fragments.

33-36" 10YR4/4, dark yellowish brown; loam to sandy loam; appears cobbly(hit larger rock fragments)

About 33 inches of suitable soil for salvage. The three inch layer with coal in it could be mixed with the soil being salvaged

Site No. 5

Along the canyon bottom between the road and the stream in a maple thicket. This site is below the fill area and appears to have undisturbed soils. Digging with a spade was limited due to high rock fragment content. The site has been used as a bedding area by cattle.

0-14" 7.5YR2.5/2, very dark brown; cobbly loam; high organic matter content

14-18" 7.5YR3/2, dark brown; cobbly to stony loam

Lighter colored subsoil was not encountered at this spot. The bottom is very stony and appears to have pockets of organic rich soils and spots that are extremely high in rock fragments.

Site No. 6

About 20 feet south of a stake identified as DUGP103; off from the west edge of the road.

0-3" Black waste coal

3-8" 10YR3/3-3/4, dark brown to dark yellowish brown; sandy loam

8-12" 10YR3/4, dark yellowish brown, with 7.5YR4/6, strong brown burned rock fragments; gravelly sandy loam; very firm

12-36" 10YR3/3-3/4, dark brown to dark yellowish brown; sandy loam; very few rock fragments.

36+" Yellowish brown cobbly loam subsoil.

Site No. 7

About 20 feet north of a stake identified as DUGP103; at the west edge of the road near the north end of the project site.

0-11" 10YR3/2, very dark grayish brown; sandy loam; weak, fine granular structure.

11-24" 10YR4/3-4/4, brown to dark yellowish brown; sandy loam to loam; few rock fragments.

24-28" 10YR4/4-10YR5/4, dark yellowish brown to yellowish brown; cobbly loam.

About 24 inches of suitable surface soil.

Comments:

Much of the surface is high in rock fragments including stones and a few boulders. Soil pits were dug where the least amount of rock fragments were present. There is good supply of soil that is suitable for reclamation although waste coal, large rock fragments, road surface, and subsoil fill material will reduce the average compared to some of the thicknesses noted at the soil pits. Suitable soils for salvage have a very dark grayish brown to dark yellowish brown color and generally less than 30 percent rock fragments. High calcium carbonate layers (calcic) were not encountered, and no soil features not considered representative of this site were identified. No root restricting layers were noted although there was a reduction in roots with depth and as the soil color became lighter and rock fragment content increased. Bedrock appears to be near the surface only near the rock ledges along the west side of the project area.

Soil Inventory and Assessment
Pace Canyon Ventilation Fan Project
Dugout Canyon Mine
Carbon County, Utah

November 5, 2004

By:

Dan Larsen
Soil Scientist
EIS Engineering and Consulting
31 North Main Street
Helper, Utah

Soil Inventory and Assessment
Pace Canyon Ventilation Fan Project
Dugout Canyon Mine

On November 5, 2004 an onsite soil inventory and assessment was conducted at the proposed ventilation fan site in Pace Canyon by Dan Larsen, Soil Scientist, Environmental Industrial Services, Helper, Utah. The primary objective was to identify the quality and extent of suitable "topsoil" materials to salvage for reclamation. This supplements information available in "The Soil Survey of the Carbon County Area, Utah and information collected in 2003 for an environmental assessment of several exploration drill sites in the vicinity.

The project is located northeast of Wellington, Utah in a southward bound drainage in the Book Cliffs north of Clarks Valley (N1/2, NW1/4, S30, T13S, R13E, SLBM). It is located near the canyon bottom and toeslopes of a steep, rocky canyon dominated by sandstone rock structure. Rock ledges and large boulders are common upslope from the site. The general vegetation on the site includes pinyon pine, juniper, mountain maple and Douglas fir.

The approximate area designated for disturbance from this project is about 2.7 acres. However, much of the area is presently in a disturbed condition from previous mining activities, logging and the Pace Canyon road.

Soil parent materials consist of colluvial and alluvial deposits derived mostly from sandstone and shale with inclusions of coal. Stones, cobble and gravel fragments composed of sandstone are common on the surface and within the soil matrix. The soils range from shallow along the rock outcrops on the west side to very deep near the present road and between the road and the stream. Much of the soil material east of the road consists of cobbly fill. Soil textures are sandy loam and loam. They are neutral to slightly alkaline in reaction. Representative natural surface soils are very dark grayish brown to brown and subsoils are dark yellowish brown to yellowish brown.

A coal waste pile up to about 40 inches deep covers a portion about 30 feet in diameter near the fan location. The material consists of fairly coarse coal, much of which is about one to three inches in diameter and is unsuited as soil material for plant growth.

Soil that is considered suitable for salvage and surface application is very dark grayish brown to dark yellowish brown in color and has a sandy loam to loam texture with less than 35 percent rock fragments. Material that is very stony and generally yellowish brown in color is considered subsoil material. Although the surface may appear high in rock fragments, there is a considerable amount of soil available that is relatively low in rock fragments. The larger stones

(roughly greater than 24 inches in diameter) and boulders should be separated from topsoil material and not included in the topsoil pile. Waste coal that can be readily identified and removed as a layer should be segregated from the topsoil.

The fill material along the east side of the road consists mostly of cobbly to stony sandy loam subsoil materials. The southern portion appears to have more dark colored topsoil intermingled in it and contains some salvageable soil. Within the narrow, relatively undisturbed strip between the fill and the stream, a very dark colored topsoil is present and is at least 12 inches thick.

The site has soils that are representative of this area and there is no evidence of any unusual properties that would cause any problems for reclamation. Overall, there is an adequate amount of soil suitable as topsoil material. An average of about 12 to 14 inches is projected. Some spots have up to 36 inches of suitable soil, while the roadway and the northeast corner of fill material do not have soils considered as suitable for a surface layer.

The soils are moderately erodible but are susceptible to concentrated runoff from the steep canyon slopes under intense rainfall events. Therefore, adequate runoff control measures must be implemented.

The project area is included in "The Soil Survey of the Carbon County Area, Utah", 1988 by the Soil Conservation Service, (now the Natural Resources Conservation Service). The site is mapped as being within soil map unit 96 (Rock Outcrop – Rubble and Travessilla Complex) and adjacent to soil map units 21 (Croyden loam, 8 to 30 percent slopes), 84 (Podo – Rock Outcrop Complex) and 97 (Rottulee family, Traq complex). In a canyon bottom situation the soils are often transitional to these mapped on either side of the canyon in a general soil survey (order 3 intensity level). The Pace Canyon ventilation fan site appears to be mostly in a frigid soil temperature regime while the northwest canyon slopes are cryic (colder) and the southeast facing slopes are mesic (warmer).

Brief soils descriptions were taken at seven points on November 5, 2004 to identify the characteristics of soils at the proposed fan site.

G:\UC801\07\PERMIT DWG\FIG-TESTPIT.DWG\01-03-05

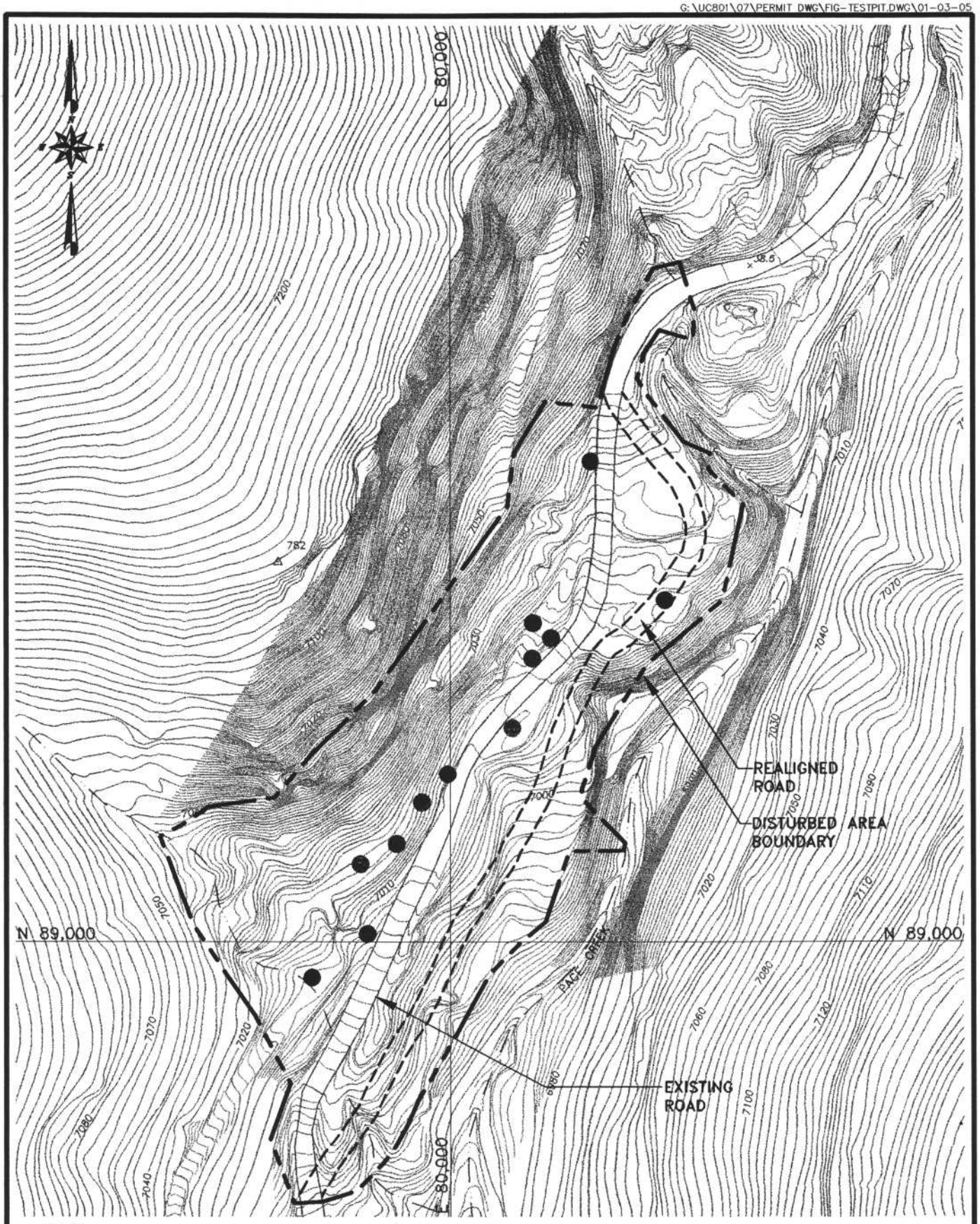

LEGEND

- SOIL TEST PIT LOCATIONS 2003
- SOIL TEST PIT LOCATIONS 2004

0' 100'

SOIL TEST PIT LOCATION MAP

EarthFax

PHOTOGRAPH LOCATIONS

G:\UC801\07\DWG\FIG-TESTPIT.DWG\10-28-04

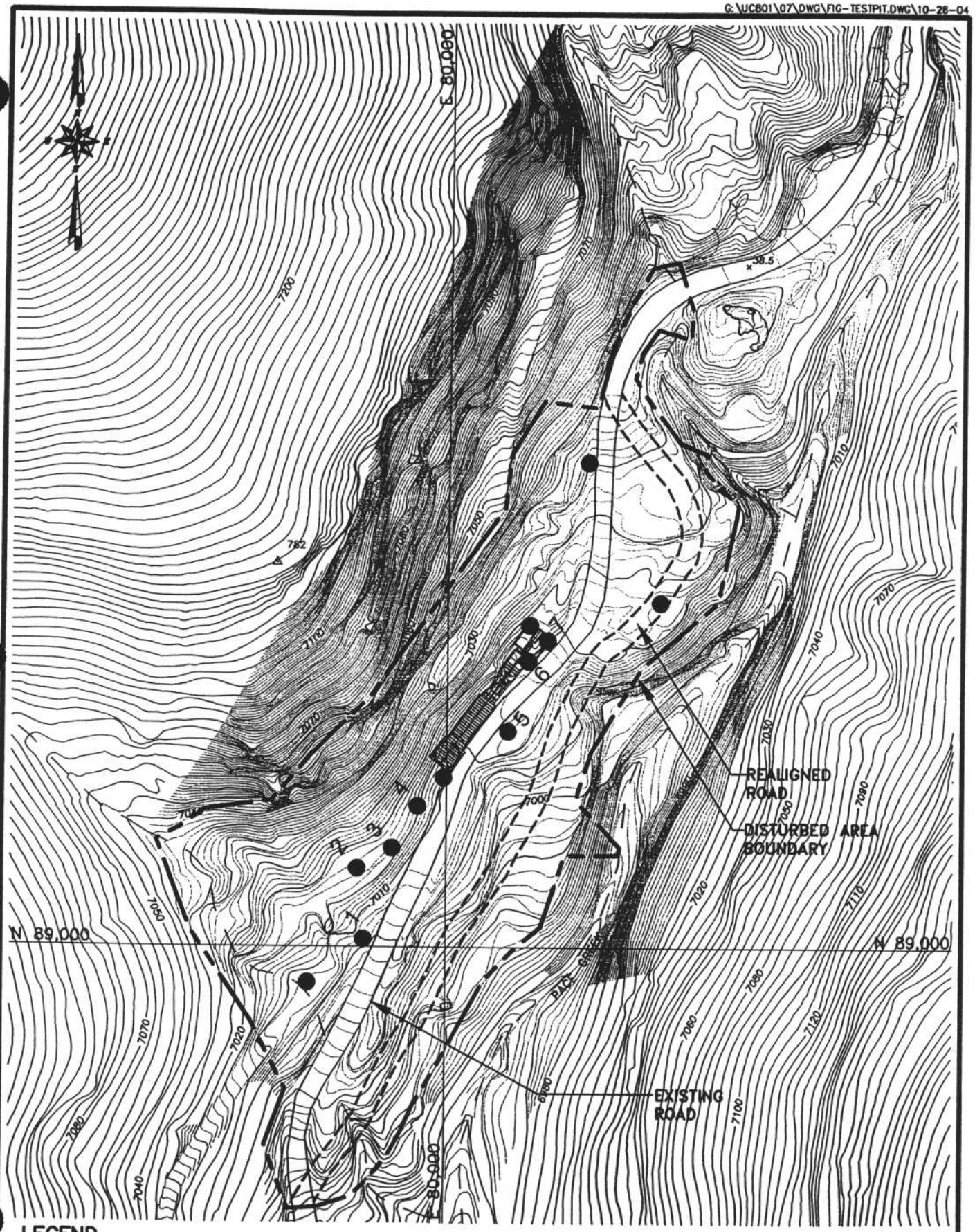

LEGEND

- SOIL TEST PIT LOCATIONS 2003
- SOIL TEST PIT LOCATIONS 2004

0' 100'

PHOTOGRAPH LOCATIONS

SOIL TEST PIT LOCATION MAP

EarthFax

PHOTO #1

PHOTO #2

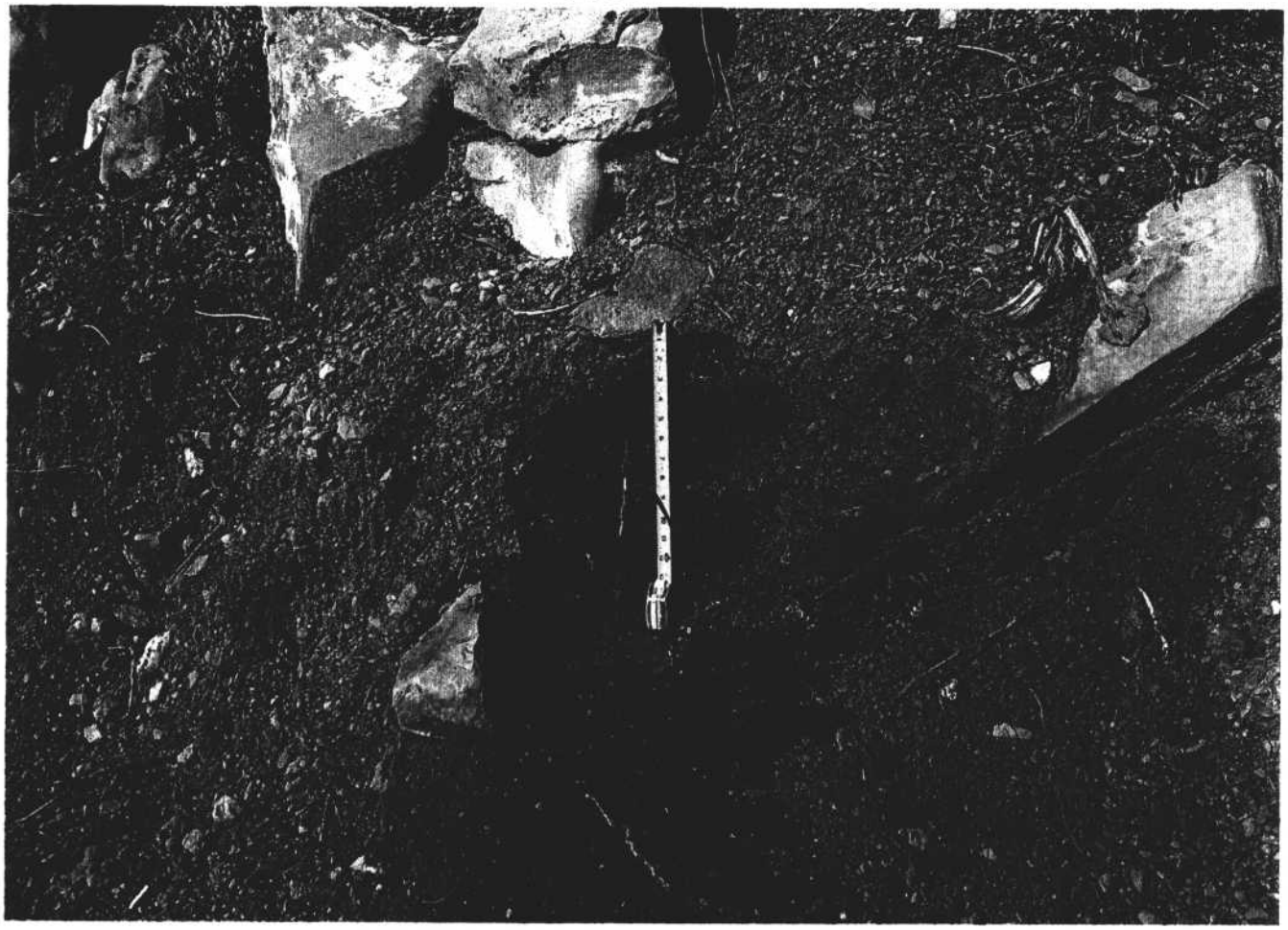

PHOTO #3

PHOTO #4

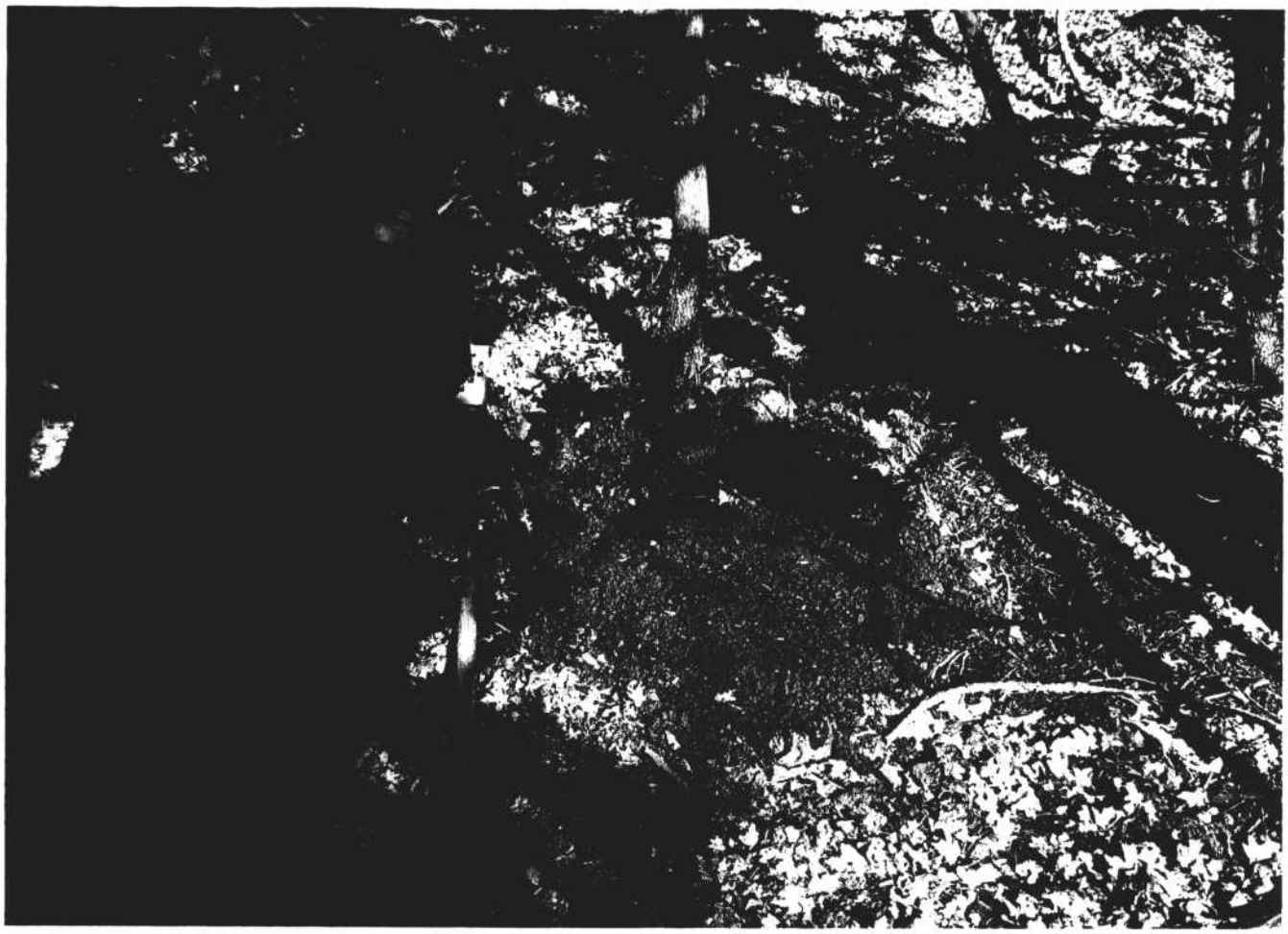

PHOTO #5

PHOTO #6

PHOTO #7

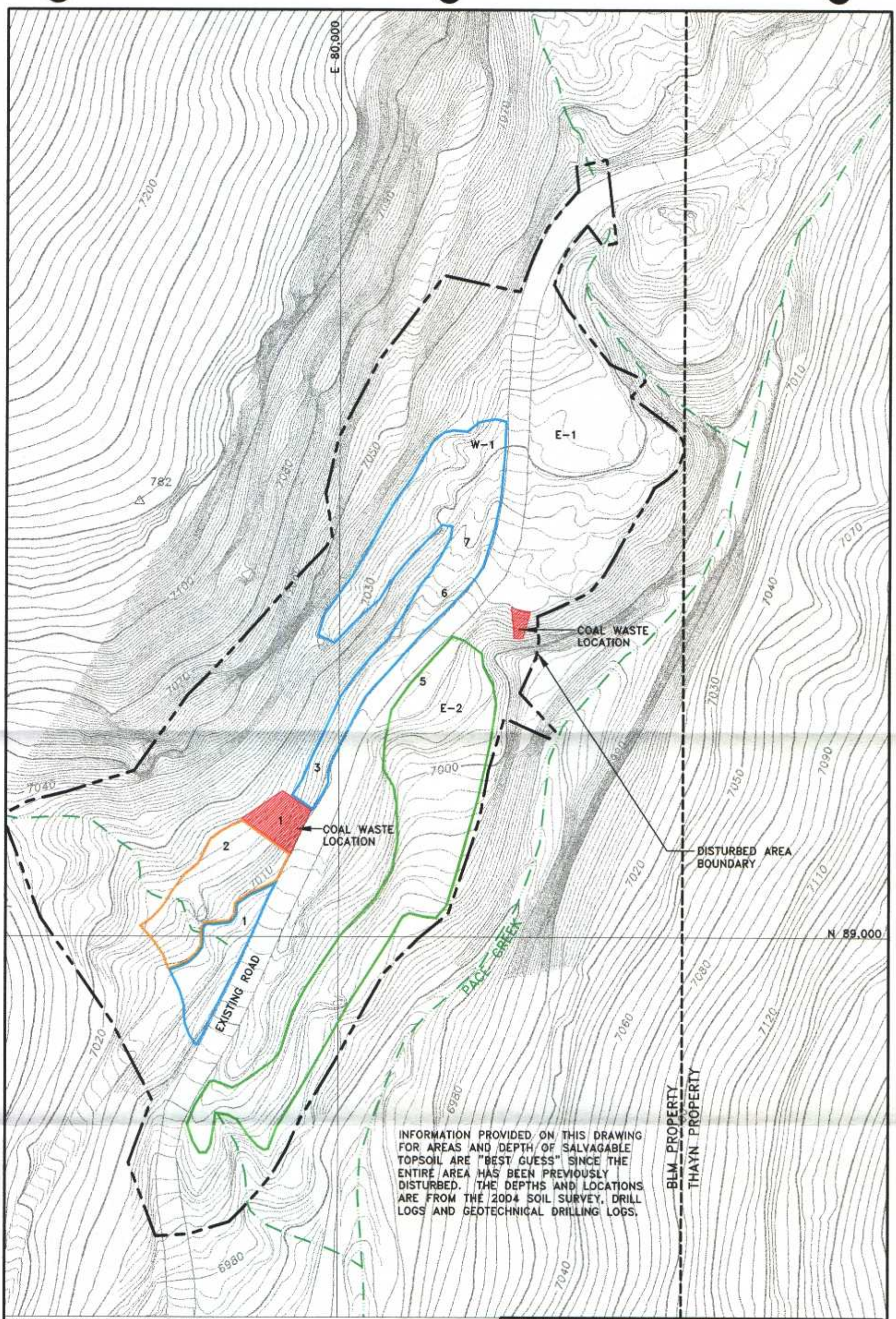

TOWNSHIP 13 SOUTH, RANGE 13 EAST, SECTION 30

APPROX. TOPSOIL DEPTH OF 14"

TOPSOIL, A HORIZON 18", B HORIZON 18" = 36"

TOPSOIL, A HORIZON 24", B HORIZON 34" = 57"

NUMBERS ON MAP CORRESPOND TO SOIL TEST PIT NUMBERS

TOPOGRAPHY FROM OLYMPUS AERIAL SURVEYS INC.
FLOWN 08-12-04

REVISIONS OR UP-DATES			DATE: 11-16-04	
NO.	DATE	BY	DESIGNED BY:	LJV
			DRAWN BY:	DWF
			CHECKED BY:	VSM
			SCALE:	1"=60'

FILENAME:

Canyon Fuel Company, LLC
Dugout Canyon Mine

PACE CANYON FAN
TOPSOIL DEPTH
2004 SOIL SURVEY

P.O. BOX 1029
WELLINGTON, UTAH 84542

DRAWING OR MAP NUMBER
APPENDIX 2-3

EarthFax Engineering, Inc.

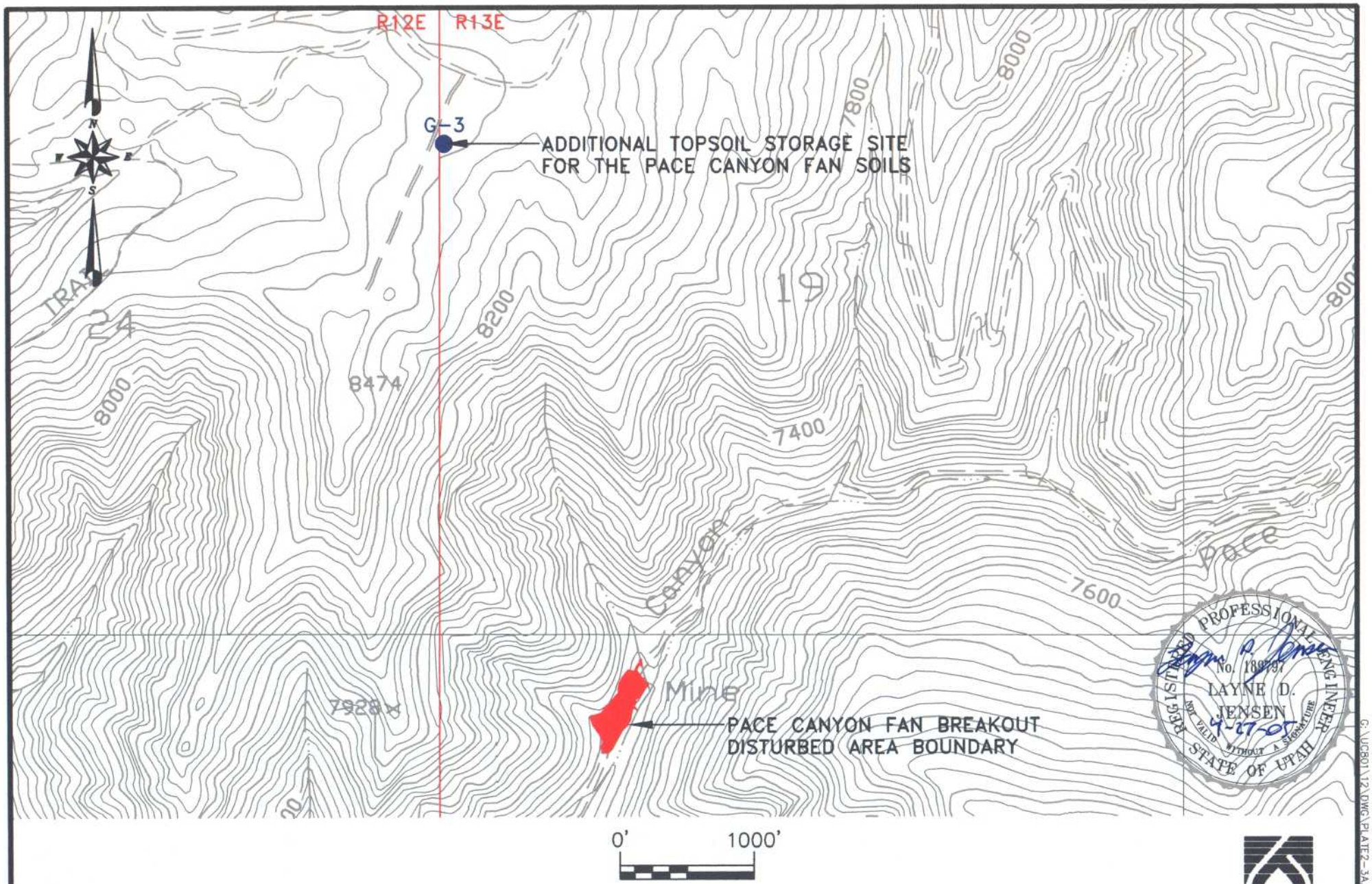

PLATE 2-3A ALTERNATE TOPSOIL STORAGE SITE

EarthFax

TOWNSHIP 13 SOUTH

G:\UCB01\12\DWG\PLATE2-3A.DWG\03-20-05

APPENDIX 2-9

Pace Canyon Fan Facilities
Topsoil and Storage Pile Calculations

REGISTERED PROFESSIONAL ENGINEER
4-21-05
No. 189797
LAYNE D.
JENSEN
STATE OF UTAH

Topsoil Calculations

General

- The outslopes of the topsoil stockpiles and berms are assumed to be 2:1. The angle of repose for soils in this area are in excess of 50°. Thus, the assumption is valid. Topsoil stockpiles for the Regas holes have successfully been built using 1:1 slopes.

- This site has been previously disturbed. Thus, topsoil resources are limited. 18 inches of topsoil will be stripped and stockpiled from areas impacted by construction with the exception of the current road area and areas only temporarily disturbed. Such as the area impacted by portal construction. (See Plate PC7-5A)

- Berms will be constructed of subsoil not topsoil.

- Topsoil stripped from temporarily disturbed areas will be stockpiled separately. This topsoil will be protected with silt fences until it is replaced, mulched, gouged and reseeded. These areas include the area above the portal and channel diversion area.

Ave. topsoil depth = 18."

Area to be stripped of topsoil = 57,460 ft^2

Volume of topsoil = $(57{,}460\ ft^2)(1.5ft) = 86{,}190\ ft^3 = 3{,}192$ CY

The Average End Area method will be used to estimate the volume in the topsoil stockpiles. The areas used in the calculation were generated in AutoCad using 1 foot contours

Shaft Area Topsoil Stockpile

Elevation (ft)	Area (ft^2)	volume (ft^3)
7028	0	
7029	228	114
7030	401	315
7031	558	479
7032	655	607
7033	826	740
7034	916	871
7035	1011	964
7036	967	989
7037	890	928
7038	790	840
7039	675	733
7040	562	618
7041	547	554
7042	543	545
7043	541	542
7044	535	538
7045	539	537
7046	503	521
7047	473	488
7048	449	461
7049	430	440
7050	410	420
7051	363	386
7052	310	337
7053	269	289
7054	233	251
7055	202	218
7056	170	186
7057	137	153
7058	110	124
7059	83	96

$15{,}284\ ft^3 = 566\ CY$

Portal Area Topsoil Stockpile

Elevation (ft)	Area (ft^2)	Volume (ft^3)
7016	6	59
7017	117	197
7018	278	326
7019	374	397
7020	420	447
7021	473	507
7022	542	580
7023	617	656
7024	695	742
7025	789	888
7026	986	1016
7027	1046	1071
7028	1096	1158
7029	1220	1311
7030	1402	1417
7031	1433	1371
7032	1309	1237
7033	1165	1091
7034	1017	940
7035	864	785
7036	706	624
7037	541	460
7038	379	
		17,280 ft^3 ⇒ 640 CY

Total Stockpile capacity = 566 CY + 640 CY = 1206 CY

1,206 CY < 3,192 ∴ 1986 CY will need to be hauled to an alternate storage site.

EARTHFAX ENGINEERING, INC.
ENGINEERS / SCIENTISTS

PROJECT UC 801-12 PAGE ____ OF ____
COMPUTED LKJ DATE 4-20-05
CHECKED ____ DATE ____

Alternate Topsoil Stockpile

Volume of topsoil to be stored = 1986 CY

The footprint of the topsoil stockpile will need to be approximately 80' x 100'.

Slopes will be 2H : 1V

Height	Dimensions	Area	Volume
0	80 × 100	8000	
			14624
2	72 × 92	6624	
			12000
4	64 × 84	5376	
			9632
6	56 × 76	4256	
			7520
8	48 × 68	3264	
			5664
10	40 × 60	2400	
			4064
12	32 × 52	1664	
			1504
13	28 × 48	1344	
			55008 ft³ = 2037 CY

2037 CY > 1986 CY ∴ OK

The topsoil stockpile will need to be 80' x 100' x 13' to hold all of the expected topsoil.

CHAPTER 3

BIOLOGY

TABLE OF CONTENTS

Section — Page

310 INTRODUCTION 3-1

311 Vegetative, Fish and Wildlife Resources 3-1

312 Potential Impact to Vegetative, Fish and Wildlife Resources 3-1

313 Description of Reclamation Plan 3-2

320 ENVIRONMENTAL DESCRIPTION 3-2

321 Vegetation Information 3-2

321.100 Plant Communities Within the Proposed Permit Area 3-2
321.200 Land Productivity Prior to Mining 3-11

322 Fish and Wildlife Information 3-11

322.100 Level of Detail 3-12
322.200 Site-specific Resource Information 3-12
322.300 Fish and Wildlife Service Review 3-24

323 Maps and Aerial Photographs 3-24
323.100 Location and Boundary of Proposed Reference Area 3-25
323.200 Elevations and Locations of Monitoring Stations 3-26
323.300 Facilities for Protection and Enhancement 3-26
323.400 Vegetation Type and Plant Communities 3-26

330 OPERATION PLAN 3-27

331 Measures Taken to Disturb the Smallest Practicable Area 3-27

332 Description of Anticipated Impact of Subsidence 3-27

333 Plan to Minimize Disturbances and Adverse Impacts 3-29

333.100 Minimized Disturbance to Endangered or Threatened Species 3-30

TABLE OF CONTENTS (Continued)

Section — Page

333.200 Species and Habitats 3-30
333.300 Protective Measures 3-31

340 RECLAMATION PLAN 3-33

341 Revegetation 3-33

341.100 Schedule and Timetable 3-34
341.200 Descriptions 3-34
341.300 Greenhouse Studies, Field Trials or Other Equivalent Studies 3-46

342 Fish and Wildlife 3-46

342.100 Enhancement Measures 3-46
342.200 Plants Used for Wildlife Habitat 3-46
342.300 Cropland 3-47
342.400 Residential, Public Service and Industrial Land Use 3-47

350 PERFORMANCE STANDARDS 3-47

351 General Requirements 3-47

352 Contemporaneous Reclamation 3-47

353 Revegetation: General Requirements 3-48

353.100 Vegetative Cover 3-48
353.200 Reestablished Plant Species 3-49
353.300 Vegetative Exception 3-50
353.400 Cropland 3-50

354 Revegetation: Timing 3-50

355 Revegetation: Mulching and Other Soil Stabilizing Practices 3-50

TABLE OF CONTENTS (Continued)

Section — Page

356 Revegetation: Standards for Success 3-50

356.100 Success of Revegetation 3-52
356.200 Standards for Success 3-53
356.300 Siltation Structure Maintenance 3-54
356.400 Removal of Siltation Structures 3-54

357 Revegetation: Extended Responsibility Period 3-55

357.100 Extended Period Begins 3-55
357.200 Vegetative Parameters 3-55
357.300 Husbandry Practices 3-55

358 Protection of Fish, Wildlife and Related Environmental Values 3-55

358.100 Existence of Endangered or Threatened Species 3-56
358.200 Bald and Golden Eagles 3-56
358.300 Taking of Endangered or Threatened Species 3-56
358.400 Replacement of Wetland and Riparian Vegetation 3-56
358.500 Manmade Wildlife Protection Measure 3-57

REFERENCES 3-58

LIST OF TABLES

Table

3-3 Reclamation Monitoring Schedule 3-44

LIST OF FIGURES

Figure

3-1 Reclamation Channel Slope Definitions 3-45

LIST OF PLATES

Plate

3-1 Vegetation

3-1A Range Site Classification of Disturbed Area

3-1B Dominant Vegetation Communities Sampled in 1996

3-1C Dominant Vegetation Communities Sampled in 1997

3-1D Fish Creek Range Site Area

3-1E Pace Canyon Fan Vegetation and Reference Area

3-2 Wildlife (Confidential Folder)

3-3 Potential Locations of Cliff Escarpments Within Permit Boundary and Adjacent Area

LIST OF APPENDICES

Appendix

3-1 Vegetation Data

3-2 UDWR Report

3-3 Fish and Wildlife Data

3-4 Pace Canyon Fan Portal - Vegetation and Wildlife Data

CHAPTER 3
BIOLOGY

310 INTRODUCTION

This chapter presents a description of the biological resources found on the Dugout Canyon permit and adjacent areas. Additional information can be found in the following amendments: Methane Degassification Amendment (August 2003), Refuse Pile Amendment (February 2003), and the Leachfield Addendum A-1 (March 2001). The remainder of the State Lease ML-48435-OBA (SITLA Lease) was incorporated into the Dugout Canyon Mine permit area in 2005.

The data used in preparation of this chapter have been gathered from the Sage Point-Dugout Canyon Mining and Reclamation Plan, Soldier Creek Coal Company Mining and Reclamation Plan, Environmental Research and Technology, Inc., Utah Division of Wildlife Resource (UDWR), Utah State Fish and Game, Eureka Energy Company (Nicolas Temnikov and Christopher A. Slaboszewicz), Soil Survey of Carbon Area, Utah, aerial photography, and Natural Gas Corporation of California.

311 Vegetative, Fish and Wildlife Resources

Vegetative, fish, and wildlife resource conditions in and adjacent to the proposed Dugout Canyon Mine are discussed in Section 320.

312 Potential Impact to Vegetative, Fish and Wildlife Resources

Potential impacts to vegetative, fish, and wildlife resources and the associated mitigation plan are presented in Sections 330 and 340 of this chapter.

313 Description of Reclamation Plan

The reclamation plan used to restore the vegetative, fish and wildlife resources to a condition suitable for the postmining land use is presented in Section 340.

320 ENVIRONMENTAL DESCRIPTION

321 Vegetation Information

This section contains the environmental descriptions of the vegetation for the permit and adjacent areas.

321.100 Plant Communities Within the Proposed Permit Area

Vegetation communities of the permit area were first investigated by Dr. Steven Richardson of Logan, Utah during 1979. These studies encompassed the 22,506 acres of the formerly proposed Sage Point - Dugout Canyon permit area. Dr. Richardson's studies were subsequently upgraded in 1980 by Mr. Steven R. Viert and presented in the Sage Point - Dugout Canyon permit application submitted December 8, 1980 and approved by the Division in May, 1984 (Permit No. ACT/007/009). The vegetation designations used on Plate 3-1 are a combination of their studies, aerial photography, in association with the Soil Survey of Carbon Area, Utah and field verification.

Plate 3-1 has been prepared using the following vegetation designations:

Barren Ground	(B)
Douglas Fir	(DF)
Deciduous Streambank	(DS)
Farmland-Weeds	(FW)
Greasewood-Sagebrush	(GS)
High Shrubs	(HS)
Mixed Conifer	(MC)
Mixed Conifer-Mountain Brush	(MCMB)

Pinyon-Juniper	(PJ)
Ponderosa Pine	(PP)
Quaking Aspen	(QA)
Sagebrush	(S)
Shrub-Grass-Juniper	(SGJ)
Deciduous Stream Bank Vegetation and limited riparian vegetation (Pace and Rock Creek)	(DSR)

As discussed in the report prepared by Mt. Nebo Scientific, the Dugout Canyon disturbed area contains riparian, rabbitbrush/yellow sweet clover, and Pinyon/Juniper vegetation designations (see Appendix 3-1).

The dominant vegetation communities occurring in the area are somewhere below the climax stage of succession. Historic livestock grazing practices have caused a decline, or disappearance, of many naturally occurring species and their replacement by others (often noxious weeds). Over several years, this effect has altered the composition of the floral communities of the area.

Other impacts to the vegetation communities of the area have resulted from the previous construction of roads. Roads and trails tend to follow drainages and have thereby impacted the riparian, sagebrush, mountain brush, and coniferous communities. Weeds usually dominate the disturbed road banks. Mining facilities in Dugout Canyon constructed prior to the enactment of SMCRA displaced an additional small amount of native vegetation.

Baseline sampling by Dr. Richardson only occurred on five of the ten communities existing within the permit area. These five communities are Douglas Fir, Mixed Conifer, Pinyon-Juniper, Shrub-Grass-Juniper, and Deciduous Streambank. Quantitative descriptions of floral communities presented in this M&RP are based on the former Sage Point-Dugout Canyon permit document. Appendix 3-1 presents data for the vegetation communities discussed in this section. The adequacy of the sampling effort is indicated in Appendix 3-1.

The farmland-weeds vegetation type resulted from abandoned agricultural activities (due to lack of water) and is significant only from the standpoint that mule deer tend to feed on remaining alfalfa during the spring green-up. It should be noted that none of this community occurs within the permit boundary.

Due to multiple consultants/companies gathering vegetation data, the following table has been provided to clarify the plant communities names used by each.

Sampling Organization	Plant Community			
Natural Resources Conservation Service	Riparian	Pinyon-Utah Juniper	Douglas-fir	Disturbed
Richardson/Viert Study	Deciduous Streambank	Pinyon-Juniper	Mixed Conifer and Douglas fir	N/A
Mt. Nebo Scientific Study	Riparian	Pinyon/Juniper	N/A	Rabbitbrush/ yellow sweet clover
Pat Johnston Study	Riparian	Pinyon/Utah Juniper	N/A	N/A

Douglas Fir

The Douglas Fir community occurs on the north facing slopes at upper elevations in deeper productive soils. Floral and structural composition is that of a forest community consisting primarily of Douglas Fir with a few scattered Ponderosa pine, Rocky Mountain juniper, and quaking aspen trees in the overstory.

Ground cover of the overstory in the Douglas Fir community averages 65.0% and productivity of the trees was not determined. This community exhibits an average of 380.5 trees/ac comprised mainly of Douglas Fir (68.8% of all trees), Ponderosa pine (26.1%), and pinyon pine (4.1%). Examination of average basal diameters of the trees indicates a late-successional and mature community.

Ground cover of the understory is dominated by shrubs (18.4% cover), especially serviceberry, big sagebrush, snowberry, and creeping barberry with 4.2, 3.8, 3.8, and 2.5% cover, respectively. Grasses exhibit a sparse 0.8% cover while forbs only average 1.6% cover. Productivity of this understory totals 35.8 g/m^2 or approximately 320 lb/ac. Shrubs contribute 26.2 g/m^2 while grasses and forbs contribute 2.7 g/m^2 and 6.4 g/m^2, respectively. Creeping barberry, mountain mahogany, big sagebrush, and snowberry shrubs dominate with 7.7, 5.0, 4.9, and 4.9 g/m^2, respectively. The adequacy of the sampling effort is indicated in Appendix 3-1.

Mixed Conifer

The mixed conifer vegetation type is an ecotonal community which occurs on the slopes of mid-elevational canyons that cut into the Book Cliffs. Floral and structural composition is that of a forest community consisting primarily of coniferous tree species in the overstory. These overstory tree species include Douglas Fir, Rocky Mountain maple, pinyon pine, and Utah juniper.

Ground cover of the overstory in the mixed conifer community averages 24.5% with Douglas Fir, Rocky Mountain juniper, and Rocky Mountain maple trees dominating with 10.0, 5.0 and 3.5% cover, respectively. Productivity of the trees was not determined; however, the community exhibits a density of 223.7 trees/ac. Examination of average basal diameters of the trees indicates a mid- to late-successional community with young Douglas Fir trees.

Ground cover of the understory is dominated by shrubs (11.5% cover), especially snowberry and big sagebrush with 4.5 and 3.5% cover, respectively. Grasses contribute another 4.5% cover, especially western wheatgrass (3.0% cover), while forbs exhibit only 2.5% cover. Productivity of this understory totals 38.5 g/m^2 or approximately 345 lbs/ac. Of this total, shrubs contribute 20.2 g/m^2, grasses 4.9 g/m^2, and forbs 13.1 g/m^2 with big sagebrush, Louisiana sagewort, and mountain mahogany dominating (7.7, 5.9, and 3.3 g/m^2, respectively).

Pinyon - Juniper

The pinyon - juniper community is primarily an open woodland of mature pinyon pine and Utah juniper with very sparse understory vegetation. The community occurs mainly on mesa tops and broad alluvial deposits at the foot of the Book Cliffs, as well as on the more southern exposed slopes of the lower canyons. Pinyon - juniper is one of the most important vegetation communities for mule deer during the winter.

Ground cover of the overstory in the pinyon - juniper community averages 20.0% and productivity of the trees was not determined. This community exhibits an average of 291.1 trees/ac comprised entirely of pinyon pine (43.0% of the trees) and Utah juniper (57.0%). Examination of average basal diameters of the trees indicates a near climax mature community.

Ground cover of the sparse understory is dominated by shrubs (5.2% cover), especially by mountain mahogany with 2.5% cover. Cover by grasses was non-existent in the sampled areas and forbs only averaged 3.4% cover with euphorbia (spurge family) the dominant forb with 2.2% of the cover. The productivity of this understory is very light with only 3.3 g/m^2 (30 lbs/ac) of total annual production. Black sagebrush, mountain mahogany, and buckwheat were the dominant plants with 0.7, 0.5, and 0.5 g/m^2, respectively.

The Pinyon-Utah Juniper community within the disturbed area boundary was surveyed during the Fall of 1997 by Patricia Johnston (see Appendix 3-1). During the survey the cover was 65.94%, with the woody species stems per acre being 2,334.4. George Cook of the Natural Resources Conservation Service (NRCS) surveyed the site to determine pre-mining productivity as defined in Item 4, Section IV, Productivity Measurements, UDOGM Vegetation Guidelines, Appendix A, February 1992. Productivity is discussed in Section 321.200.

Deciduous Streambank

The deciduous streambank community occurs only in a narrow band (usually less than 50 ft wide) along portions of Dugout Creek and other narrow valley bottoms with at least intermittent stream flows. This community differs from adjacent vegetation on canyon slopes (usually mixed conifer, Douglas fir, sagebrush, or mountain brush) in that deciduous trees and shrubs are more common on banks of stream channels. Floral and structural composition is that of a forest community consisting primarily of narrowleaf cottonwood, Rocky Mountain maple, and Douglas Fir trees in the overstory.

Total ground cover of the community averages 63.4% with 38.2, 14.6, 2.4, and 0.4% of the cover due to trees, shrubs, grasses, and forbs, respectively. Dominant trees in the overstory include Rocky Mountain maple, narrowleaf cottonwood, Douglas Fir, and water birch with 12.0, 11.3, 6.0, and 5.3% cover, respectively. Productivity of the overstory was not determined. However, the community exhibits an average of 216.1 trees/ac. Examination of average diameters of the trees indicates a mid- to late-successional community with only fair reproduction of the overstory species.

Ground cover of the understory is dominated by shrubs (14.6% cover), especially elderberry, snowberry and Wood's rose with 3.0, 3.0 and 2.7% cover, respectively. Cover by grasses (2.4%) and to a certain degree, forbs (8.2%), is subdued because of past grazing pressure by livestock, but is still a viable component of the community. Productivity is known only for the community as a whole (102.5 g/m^2 or 912 lbs/ac), and despite past grazing pressures, it is still the most productive community in the area.

In Pace Creek and Rock Creek Canyons, heavy grazing and erosion has resulted in sections of the stream banks having little or no deciduous and/or riparian vegetation. The vegetation within these drainages has been identified on Plate 3-1 with the symbol DSR.

Riparian (1997)

During 1997 a study was performed on the riparian community of Dugout Creek by Patricia Johnston. The study covered approximately 2,100 feet of the creek channel. The study included the gathering of data on cover (84.83%) and woody species density (1,624.6 stems per acre) within the disturbed area boundary. George Cook of the Natural Resources Conservation Service surveyed the site to determine productivity and condition (see Section 321.200). Reports from Patricia Johnston and George Cook are included in Appendix 3-1.

The majority of the riparian vegetation and soils within the study area were disturbed during an earlier mining operation with debris evident along much of the length of Dugout Creek. As was common during early mining, the channel was most likely realigned as additional space for facilities was needed.

Shrub - Grass - Juniper

The shrub - grass - juniper vegetation type is another ecotonal community found between the greasewood - sagebrush and pinyon - juniper communities primarily on south and east facing steep rocky slopes along the base of the Book Cliffs. It can occasionally be found on upland benches and flats. This community exhibits a greater abundance of perennial grasses than any other vegetation type found within the area.

The shrub - grass - juniper community exhibits a sparse overstory of pinyon and juniper trees (2.9% ground cover) which at maturity do not obtain the size of the trees in the pinyon - juniper community. Density of these trees only averages 57.3 trees/ac, and productivity of this sparse overstory was not measured.

The understory of this community is dominated by grasses with 9.3% ground cover, while shrubs exhibit 6.4% cover and forbs exhibit a sparse 0.4% cover. Dominant species include creeping

wildrye, galleta grass, and black sagebrush with 5.4, 3.2 and 4.6% cover, respectively. Productivity of this understory totals 59.3 g/m^2 or 528 lbs/ac with contributions by grasses, shrubs, and forbs of 40.9, 17.1, and 1.2 g/m^2, respectively. Dominant plants are the same as indicated for ground cover.

Ponderosa Pine

Quantitative information for the Ponderosa pine community does not exist as it is too limited in areal extent and it has not been, nor will it be, disturbed by mine facilities. The community is present in the high canyons of the Book Cliffs usually in association with Douglas Fir and mixed conifer vegetation types. Ponderosa pine is the predominant species present; however, Douglas Fir, pinyon pine, and Utah juniper occur with less frequency. A thin growth of mountain shrubs as well as grasses and forbs similar to the mixed conifer community is present in the understory.

Quaking Aspen

Quantitative information about the aspen community was not collected due to its limited areal extent within the upland benches of the Book Cliffs; and because it has not been, nor will it be, disturbed by the mining operation. Quaking aspen is the dominant species in the overstory with an occasional Rocky Mountain maple or Gambel's oak being present. The understory is often park like, dominated by grasses and forbs with only a few shrubs present (mainly snowberry).

Sagebrush

The sagebrush community occurs on the dip slope between 7,200 and 9,000 feet in elevation. Quantitative information was not collected for this community as no mining disturbance has occurred in the past nor is expected to occur in the future. This community often intergrades with other communities, making delineation difficult in certain instances. However, big sagebrush (usually the subspecies mountain big sagebrush) is the dominant species in the community,

existing in characteristically dense stands. Common species existing in the understory include lupines, wheatgrasses, bluegrasses, and scarlet gilia.

In 1996, the mean total living cover for the mine's disturbed area (Plate 3-1B) and reference area were 36.90% and 47.50% respectively (Mt. Nebo Scientific, August 1, 1996). The area surveyed by Mt. Nebo was disturbed in a previous mining operation, with no indication that reseeding was completed when mining ceased. NRCS range site descriptions/conditions indicate that the area (surveyed by Mt. Nebo) prior to disturbance was most likely Pinyon/Utah juniper - upland very steep shallow loam.

Refer to Appendix 3-1 for the 1996 Mt. Nebo report discussing the vegetation sampling done at the Dugout Canyon Mine site within the proposed disturbed area. The Mt. Nebo report discusses the vegetation cover, composition, density, reference area, and includes photographs of the transects and reference area.

Pace Canyon - Disturbed Pinyon Juniper

On August 13 - 14, 2003, quantitative and qualitative data were taken on the vegetation of the Pace Canyon fan portal area and it's reference area, by Mt. Nebo. The transect placement technique was employed with the goal to adequately sample a representative subset of the site. The mean total living cover of the vegetation for the site was estimated at 52.50%, 44.67% of this total was from the understory and 7.83% was overstory. Pinyon pine and Utah juniper were the most common species in the overstory, big sagebrush was the most common woody species in the understory. The site had a host of forbs, nearly all of which were annual exotics or weedy species (most common was poverty weed). The only grass species inventoried was cheatgrass. The majority of the site has been previously disturbed by various activities, such as road construction, logging, exploration and mining. Refer to Appendix 3-4 for a copy of the Mt. Nebo report.

321.200 Land Productivity Prior to Mining

The land productivity of the area to be disturbed by mining was not measured in 1925 when mining first disturbed the area. Appendix 3-1 contains additional data pertaining to vegetation. George S. Cook of the NRCS surveyed the condition and production of the range site areas within the disturbed area boundary in 1997, his findings were as follows:

PJ Sage	Condition - Good	Production - 800	Potential Production - 800
Riparian	Condition - Fair	Production - 1500	Potential Production - 2200

The production is based on air dry weight of total herbage produced per acre. Patricia Johnston accompanied Mr. Cook. See Appendix 3-1 for a copy of the December 3, 1997 letter from Mr. Cook.

Pace Canyon - Disturbed PJ

Since the site was previously disturbed, production estimates were provided by Dean Stacy of the NRCS (Natural Resources Conservation Service). A letter and attachments from Mr. Stacy are included in Appendix 3-4. Production estimates for High Mountain Loam with west facing slopes for a normal year with medium cover was 600, eastern facing slope with Upland very steep stony loam was estimated at 550 annual production. Mt. Nebo estimated the total woody species density at the Pace Canyon site to be 444.

322 Fish and Wildlife Information

A summary of the fish and wildlife resource information for the permit and adjacent areas is contained in Sections 322.100 through 322.300. The data pertaining to wildlife in the following sections were collected by the UDWR (J. S. Burruss, L. B. Dalton, Larry J. Wilson, Ben Morris, Bill Bates, etc.), Eureka Energy Company personnel, EIS Environmental and Engineering Consulting and Environmental Research and Technology, Inc.

322.100 Level of Detail

The scope and level of detail within this M&RP are sufficient to design the protection and enhancement plan for wildlife and fish in the area.

This assessment of wildlife resources has been compiled pursuant to guidelines issued by the Division.

322.200 Site-specific Resource Information

Eight permanent experimental and four permanent control wildlife transects were established in the permit and adjacent areas by UDWR in December 1979. Appendix 3-2 contains a figure showing the transect locations. The transects were located within pinyon-juniper, desert shrub, and mixed conifer vegetation communities; and used to monitor wildlife habitats. The wildlife habitats included in the study were small mammals, medium-sized mammals, large mammals, raptors, game birds, song birds, reptiles, and amphibians. The four permanent control transects were located in areas not proposed for disturbance by mining operations. Appendix 3-2 contains the information pertaining to the transect studies.

Macroinvertebrates and Fish

Due to the variable nature of the stream flows in the project area and the limited number of species of macroinvertebrates identified by the UDWR and the Division, further study of aquatic macroinvertebrates was not pursued.

The low importance of the streams, as a fishery resource, has categorized them as being of little value for extensive aquatic study. Therefore, detailed aquatic studies were not performed on Dugout Creek in accordance with permission from the Division in 1979 (see letter from Mary Ann Wright, Appendix 3-3).

Small Mammals

Small mammals represent a significant part of the ecosystem. The majority are herbivores and are the primary source of food for higher trophic levels, particularly raptorial birds, canids, and felids. Small mammals, including shrews, mice, voles, chipmunks, and ground squirrels were sampled with live traplines within each transect. Relative abundance was determined for each species by transect, but not by habitat type, within the individual transects. Data concerning bats were not collected during this study, however a bat survey of the riparian and disturbed area in Dugout Canyon was performed in 1997 by Mark Perkins and included in Appendix 3-3.

Medium Mammals

The transect study did not attempt to make density estimates due to the extreme ecological variability of these mammals. The study did identify species and frequency of habitat use in the area.

Limited portions of Dugout Canyon provide habitats for weasels, badgers, and skunks. Even though the breeding and rearing activities of these non-migratory species and their dens and burrow systems are important to maintenance of their populations, the area to be disturbed is small and the species are widespread and adapt easily to the activities of man.

Large Mammals

Habitat use by all large mammals, other then mule deer, was determined in a quantitative manner. Plate 3-2 (confidential) exhibits the significant habitat for mule deer and elk in the area. Habitat use in the proximity of the permit area was determined by pellet group count and observation of track frequency. Pellet counts were made in late spring, following movement to summer range. Track counts were made once each month in January through May on all transects.

The area to be disturbed parallels a water source and therefore is important to all wildlife species. The fact that elk and deer utilize some portion of the permit area during the year means that all activities must be considered.

Mule deer on the mine area are considered by the UDWR to be part of Herd Unit 32 and the elk as part of Herd Unit 24. The deer utilize the entire permit area but seasonally concentrate in and utilize specific habitat types. During the summer the mule deer generally utilize all of the habitats near water. The most heavily used communities are the sage, mountain brush-mixed conifer, and the composite of aspen, mountain mahogany, manzanita, and pine/fir. There is normally more browse in these communities than in the others.

With the onset of fall and winter, the mule deer latitudinally migrate. Initially (late fall and early winter) they concentrate on the plateau area where they intermingle with the elk; but when the snow gets too deep for them to traverse they move into the low elevation sage and pinyon-juniper areas. The wintering areas for mule deer make them susceptible to road strikes in the vicinity of the proposed haul and access road for the Dugout Canyon Mine. The access roads to Pace and Rock Canyon crosses area used by deer as winter range, however traffic is sporadic during the winter months and heavier during the summer and fall months.

Raptors

Golden eagles are a common year long resident of the area, with suitable nesting habitat spread throughout the permit area. The cooper's hawk is known to nest in the permit area.

A variety of falcons are year long residents of the area, utilizing cliffs for their nests. To date there are no known aerie sites for falcons within or immediately adjacent to the disturbed area.

Raptors were studied during the 1979 - 1980 UDWR transect study, in 1981 by Janet Lee Young and by Hayden-Wing Associates in 1984. These reports are provided in Appendix 3-3.

Raptor nest surveys were done by the UDWR in 1995, 1997, 1998, and 1999. The nest locations identified in 1997 and 1998 are shown on Plate 3-2 in the mine's UDOGM confidential folder (confidentiality required by UDWR). All nests located in the 1997 survey were cliff nests (Ben Morris, UDWR, January 20, 1998). All nests located in the 1998 and 1999 surveys were cliff nests.

Migratory and Song Birds

Birds were studied during the 1979 - 1980 UDWR transect study. However, a more extensive study was done by Hayden-Wing Associates in 1984. Their report can be found in Appendix 3-3.

Reptiles and Amphibians

Increasing elevation rapidly reduces the number and kind of reptiles and amphibians. Furthermore, in Utah the effects of the more northern latitude reduces the number of herptiles in much the same way as does the increase in elevation.

These geographical and associated climatic factors have eliminated most desert species, leaving species that are adapted either to mountain habitats or montane type habitats. Based on extensive literature review and limited field work, it was determined that potentially 8 species of amphibians and 18 species of reptiles inhabit the area. Of these species only 5 were recorded by the UDWR in 1980: Eastern fence lizard, Sagebrush lizard, Tree lizard, Short-horned lizard, and the Gopher snake. A WESTECH biologist observed two other species in 1979, the Western whiptail and the Midget faded rattlesnake. All amphibians and reptiles are legally protected, but since the species listed are all widespread throughout the mountains of Utah, none are treated as high-interest species. It is doubtful that the proposed action would seriously impact populations, but localized individuals may be involved in habitat destruction due to subsidence. An exception to this would be if subsidence caused drying of present wet habitats essential to reproduction. Refer to Section 332 for a discussion of "Possible Short-Term and Long Term Impacts to Species Dependent on Springs, Creeks and Drainages".

Pace Canyon

Wildlife indigenous to the general area of the project include amphibians, reptiles, birds and mammals. A copy of the 2004 raptor survey map for the area is included in the 2004 Annual Report. Calling surveys of the area were also done in 2003 and 2004 for the Mexican spotted owl (Appendix 3-3).

Amphibians - There are six common species of amphibians known to occur within the general area (mesic area). These species could be present within the Pace Canyon area, but their occurrence is doubtful due to arid conditions that prevail over the majority of the area.

Reptiles - There are ten species of reptiles known to inhabit the region. The limited acreage of disturbance, however, should not be considered a threat to these species, due to the abundance of pinyon and juniper habitat, as well as sagebrush and grass habitat throughout the area.

Birds - There are approximately 185 bird species that could either be potential yearlong residents or frequent the site during portions of the year. Of these, loggerhead shrike (BLM Sensitive species) and raptors are discussed below.

A survey of the fan portal area indicated no nesting loggerhead shrikes, *Lanius ludovicianus*, near the proposed roads. This species is dependent upon the broad, open sagebrush and grass plain, as well as the presence of widely spaced pinyons and junipers. A summary of the inventory conducted for this species and a negative determination of its presence is included in Appendix 3-4 (BLM EA, UT-070-2003-55).

Raptor surveys, completed in May of 2004 by the UDWR, revealed a number of raptor nest sites on the open lower benches and cliff faces in and surrounding Pace Canyon. Two inactive golden eagles *(Aquila chrysaetos)* nests on the outer edge of one mile radius from the fan site were inventoried in 2004 (Section 24, R12E T13S) and two potential raven nests were located in previous years in Section 23, R12E T13S.

The 2004 spring inventory identified no active and or tended Golden Eagle nests within a 1/4 mile of the proposed site. An inventory in 2002, 2003 and 2004 for Mexican Spotted owl and Goshawk did not reveal the presence of these species within the fan project area.

Mammals - Ninety-two (92) species of mammals have the potential to inhabit the region. Of these, the following species; mule deer, *Odocoileus hemionus*, elk, *Cervus elaphus* and pronghorn antelope, *Antilocapra americana*, have been identified to live within or adjacent to the affected area.

As shown on Plate 3-2, the area of the fan site is designated summer range for mule deer and year-long range for elk.

Pronghorn antelope occupy the salt desert shrub habitat of the lower elevation ranges along the Clark Valley Road. This habitat is classified as high priority year-long range for pronghorn.

Threatened and Endangered Plant and Wildlife Species. Passage of the Endangered Species Act of 1973 (Public Law 23-20S) provided the legal basis for establishment of lists of endangered and threatened plant and wildlife species (Appendix 3-3).

Although three species (black-footed ferret, bald eagle, and peregrine falcon) on the list could potentially inhabit the area, an inventory of endangered wildlife species performed in 1979 by the UDWR recorded no threatened and endangered species within the proposed permit area. No confirmed sightings of black-footed ferrets have occurred within Carbon County during 1995, 1996, and the first quarter of 1997, however bald eagles have been seen flying in the vicinity of the mine (Bill Bates, UDWR).

A literature review and field studies for both the Soldier Canyon and the Sage Point - Dugout Canyon permit documents were performed to assess the possible presence of any threatened, endangered, or sensitive plant and wildlife species in the respective permit and adjacent areas.

These study areas included the proposed Dugout Canyon disturbed area. The literature review indicated that no species listed (or proposed as candidates) by the U.S. Fish and Wildlife Service (FWS) as threatened or endangered were likely to inhabit the area. In addition, the field investigations which occurred in 1979, 1980, 1983, and 1984 did not identify or locate any threatened or endangered species. No threatened or endangered plant species including Canyon sweetvetch were found within the disturbed area by Robert Thompson during his 1995 survey (see Robert Thompson letter, Appendix 3-1). Mr. Thompson is qualified and has performed threatened and endangered surveys for the U.S. Forest Service.

As reported in the 1997 bat survey "we noted no suitable habitat, did not record via detectors or capture, or note by indicators presence of *Corynorhinus townsendii*. It is our opinion the bat does not occur in the immediate vicinity of the proposed disturbance area. We also did not note suitable habitat for or encounter *Euderma maculatum* by mist net, via detectors or during audible bat transects".

Windy Gap Process as it Applies to Existing Coal Mines in the Upper Colorado River Basin

Per meetings with Division of Water Quality personnel during application for a UPDES permit in 2004, "there is no data supporting the premise that surface waters associated with the area of the mine operations reached the Price River or Colorado River prior to or since mining disturbance".

Mining Consumption:
Culinary Water is purchased from PRWID and hauled by D & D Trucking to the Mine.
Estimated **Purchased** Gallons/yr: 1,003,200
Ventilation Consumption/Evaporation:
29,354 gallons/day (3/05/04 ventilation survey)
44,000 gallons/day (9/13/04 ventilation survey)
73,354 X 0.5 = 36,677 gallons/day (survey average)
36,677 x 365 = 13,387,105 gallons/yr
Coal Producing Consumption/Coal Moisture Loss:
Water added to coal produced - 4.03% inherent moisture - source Dugout Geologist
5.80% run-of-mine moisture - year to date average
1.77% moisture added to coal by cutting operation

Projected Tonnage 2004		4,245,737 tons
Projected Tonnage 6 year average		4,369,084 tons
Tons water/yr	77,333	
Pounds water/yr	154,665,562	
Gallons water/yr	18,522,822	

Sediment Pond Evaporation:

Mine Site Pond	0.107 acres (surface area)
	18.1 in/yr (high estimate based on HCI Technical Memo, August 22, 2002)
	0.16 ac/ft
	7030 gallons/yr
Refuse Pile Pond	0.41 acres (surface area)
	9 in/yr
	0.31 ac/ft
	5612 gallons/yr (five month period, high estimate)

Spring and Seeps Effects From Subsidence - Not Applicable
Alluvial Aquifer Abstractions into Mines - Not Applicable
Alluvial Well Pumpage - Not Applicable
Deep Aquifer Pumpage - Not Applicable
Postmining Inflow to Workings - Not Applicable
Direct Diversions: - Not Applicable
Dust Suppression - 3,500 gallons per truck load, 3 loads per day, for 30 days = 315,000 gallons plus 3,000 per truck load, 1.25 loads per day, for 45 days = 168,750. Total: 483,750 gallons per year.
Mine Discharge: 6 Month Average 362,118 gpd = 132,172,948 gal/yr

Calculation estimates for water use in 2004 were necessary since we are using 2004 purchases and usage and the year is 2 months short.

Pace Canyon

"In accordance with the United States Fish and Wildlife Service's (USFWS) protocols, and inventory for the presence of threatened, endangered, and sensitive fauna and floral species was conducted on August 13, 14, and September 29, 2003. Loggerhead, shrike, burrowing owl, Northern Goshaw, Despain foot cactus, Wright fishhook cactus and Creutzfeldt crypthantha and neo-tropical migratory birds were the sensitive species of concern within the area. A thorough search of all seven well

sites and associated access roads did not reveal the presence of these species (BLM, Environmental Assessment, UT-070-2003-55)." A map of the area inventoried is provided in Appendix 3-4 within the referenced environmental assessment , it should be noted that the area covered by the aforementioned environmental assessment is the same area proposed for the construction of the Pace Canyon fan facilities. In addition a sensitive plant species survey was conducted by Mt. Nebo in August 2003. To initiate the study, appropriate agencies were consulted (e.g. Utah Natural Heritage Program) and other sources were reviewed for potential plant species that are know to be rare, endemic, threatened, endangered or otherwise sensitive in the area of study. The only plant identified was canyon sweetvetch. No rare, endemic, threatened, endangered or otherwise sensitive species were found in the area proposed for disturbance.

Habitats of Unusually High Value. High value habitats in Dugout Canyon include the riparian area and the cliff escarpments. Major portions of established habitat will not be disturbed, but the restricted access by wildlife to the water source within the area of disturbance could displace wildlife. The cliff areas adjacent to the disturbed area could harbor mountain lion, bobcat and bear; and with increased activity and noise they may avoid the area. Elk and deer who may frequent Dugout Canyon will likely avoid the area during the heaviest of activity, but resume their normal patterns once they become accustomed to it.

In a letter dated April 22, 1996 to James W. Carter the director of UDOGM, Robert G. Valentine director of the UDWR makes the following comment "much of the area is classified as critical deer winter range and is heavily used by deer and occasionally by elk and antelope". Use classification drawings of the Dugout Canyon area for large mammals (deer, elk, antelope, etc.) were requested from the UDWR in January of 1996 by SCM. The cover letter dated January 30, 1996 from the UDWR and the drawings are included in Appendix 3-3 for interpretation by UDOGM. SCM has interpreted and transferred the information (provided by UDWR) to Plate 3-2. The use classifications were extended on Plate 3-2 with the incorporation of Federal Lease U-07064-027821.

A survey for bats was performed by Mark Perkins in September of 1997. A report of this survey is included in Appendix 3-3 with a figure showing the bat survey locations. Future surveys for bats will be done concurrent with raptor surveys within the permit boundary prior to cliff disturbing planned subsidence. Pertinent data gathered in these surveys will be included in this M&RP.

No data or definition was available to determine the criteria for an area to be classified as of "unusually high value" for bats. However, since extensive rock faces, cliffs, and escarpments are present throughout the Book Cliffs Region, the land within the permit boundary is not unusual or unique to the area. The Castlegate Sandstone, Blackhawk, and Price River are the cliff forming formations present in the Dugout Canyon area. Refer to Chapter 6 for descriptions of these formations and Plate 3-3 for their locations.

In the Perkins-Dugout Mine Bat Survey the following statement was made "development plans for the proposed disturbance area contains some mitigation for resident bat species. A proposed runoff pond will likely provide accessible year round water and an associated bio-mass. Presently Dugout Creek is not classified as a perennial stream. In addition, plans include several outdoor flood lights which may act as an attractant for phototropic insects and provide a concentrated and stable food resource for local bat populations. Due to no cliff subsidence and mitigating actions noted above, it is our opinion that excepting the disturbance to and removal of 2,000 ft. of riparian zone, impact (either positive or negative) on local bat populations is minimal".

Raptor and Bat Survey

Raptor nest surveys will be conducted annually in the Spring prior to mining activities or potential subsidence within the permit area and in proposed expansion areas to the permit to obtain base line data. In addition, raptor nest locations will be monitored/surveyed the year following the first monitoring/survey if nests were observed during the survey and if operations result in subsidence. The permittee will contact the Division prior to any raptor nest protection efforts.

A bat survey for Utah sensitive bat species is planned for 2005 (May thru September), this survey will cover the cliff areas adjacent to a proposed fan breakout in Pace Canyon. Baseline bat surveys of Utah sensitive bat species will be conducted between May and September in riparian habitat expected to be impacted by subsidence. In addition, Utah sensitive bat species will be monitored/surveyed the year following the first monitoring/survey if Utah sensitive bat species were observed during the survey and if mining operations result in subsidence impact to the riparian habitat.

Since water and its corresponding vegetation are important throughout the state of Utah, regulatory agencies have been requiring mitigation for disturbance and eventual replacement from the coal industry. SCM will comply with the requirements of mitigation and eventual replacement of the resources which may be lost or disturbed during this mining operation, refer to Sections 331, 340, 350, and 762.100.

As a mitigation effort SCM replanted 7,500 feet of disturbed riparian streambank above the northern disturbed area boundary with a modified version of Seed Mix No. 1 (mitigation seed mix), to assist in restoring vegetation which has been disturbed by the logging industry.

Mitigation Seed Mix (Hydroseed/Broadcast Quantities)

SPECIES	# pls/acre
Bluebunch wheatgrass	5.0
Intermediate wheatgrass	5.0
Slender wheatgrass	5.0
Smooth brome	5.0
Indian ricegrass	3.0
Blueleaf aster	1.0
Blue flax	1.5
Northern sweetvetch	1.5
Mountain big sagebrush	1.0
TOTAL	28.0

Willows were transplanted along the edges of the stream channel above the mine site disturbed area, with the mitigation seed mix being planted from the east edge of the stream channel to the outside edge of the logging road cut. The area between the edge of the stream channel and road cut varies from 10 to 45 feet as it travels the 7,500 feet planned for replanting. The west side of the channel was not disturbed by logging. For clarification the stream channel changes to the west side of the road upstream from the disturbed area boundary.

Due to the steepness and roughness of the slope the area was hydroseeded. The mitigation seed mix (listed above) was sprayed using hydroseeding equipment over the mitigation area. A second pass of the hydroseeding equipment sprayed the mulch/tackifier on top of the previously sprayed seed mix. Two thousand pounds per acre of the Division approved (Appendix 3-1) wood fiber mulch (Ecofiber, trade name) were used on the mitigation area. The seeding and planting was completed during 1998.

Additional mitigation for disturbance is being done to comply with the requirements of the UDWR. The mitigation included the cutting of grown pinyon and juniper trees to improve the growth of the understory adjacent to the Nine Mile Canyon Road. These mitigation efforts are being coordinated directly with the UDWR.

SCM will plant approximately 4,000 willows including both the mitigation described previously and during final reclamation. A portion of the willows were planted during the spring of 1998 to satisfy the mitigation commitment. Willows were planted wherever the channel afforded sufficient space. The channel above the mine site is covered with rock slides in several stretches of approximately 100 feet each. Additional willows will be planted to complete the commitment, however the numbers being planted may decrease since it was discovered during the Spring planting that the channel affords a limited environment for willows. CFC has discussed this matter with Paul Baker of UDOGM and a commitment made by CFC to continue to keep UDOGM involved in the mitigation process. Paul Baker was contacted in 2001 concerning the progression of the willows planted, photographs were taken and forwarded to Mr. Baker for his review. Survival rate for the willows planted was estimated at 75%.

During a site visit in December of 1997, Bill Bates of the UDWR requested that the riparian mitigation include the installation of habitat/stability enhancement structures within Dugout Creek upstream from the proposed disturbed area. SCM commits to the installation of structures similar to those identified in Figure 7-12 should all regulatory agencies and SCM be in agreement. The location and type of structure will be correlated with UDWR, U.S. Fish and Wildlife Service, and the Division.

Pace Canyon

Due to the limited size of disturbance associated with the fan portal facilities, impacts to "Habitats of Unusually High Value" will be minimal.

322.300 Fish and Wildlife Service Review

If requested, SCM authorizes the release of information pertaining to Section 322 and 333 to the U.S. Fish and Wildlife Service Regional and Field office for their review.

323 Maps and Aerial Photographs

The permit area was mapped by use of a mosaic of aerial photographs and assured by ground inspection in some areas. Maps are contained within the reports provided in Appendices 3-1, 3-2 and 3-3.

During a meeting with the UDWR on January 20, 1998 Ben Morris requested that "the nest locations and related data gathered in the 1997 raptor survey of the Dugout Canyon Mine area be kept confidential". Therefore this survey will not be discussed or presented in this permit document, but can be reviewed by Division personnel within the Dugout Canyon Mine "confidential binder". The confidential binder contains Plate 3-2 which shows the location of nests found during the raptor surveys conducted by UDWR. In a Technical Analysis (Task ID #1915) for the inclusion of the SITLA Lease into the permitted area, instructions were given by UDOGM personnel to remove this

information from the confidential folder and include it in the M&RP. This information is currently contained in Appendix 3-3.

Vegetation drawings and appendices within the permit area not included in the M&RP are included in the following amendments:

Refuse Pile Amendment

RA Figure 3-1 Surrounding Representative Vegetation Communities
RA Figure 3-2 Vegetation at Site Prior to Mining Disturbance
RA Attachment 3-1 Vegetation Data

Methane Degassification Amendment

Figure 3-1 Vegetation Reference Areas
Figure 3-2 Adjacent Vegetation
Attachment 3-1 Vegetation Inventory

323.100 Location and Boundary of Proposed Reference Area

SCM will use range sites as described and designated by the NRCS Range Handbook and the UDOGM Vegetation Guidelines. Further description can be found in Section 356.100.

Mt. Nebo Scientific did sample a reference area during its 1996 vegetation survey, however SCM does not currently plan to use this data. Reference area(s) are not designated on any plate or figure within this M&RP, except as noted in Section 323.

Pace Canyon

The reference area for the fan facilities is shown on Plate 3-1E. The reference area was inventoried by Mt. Nebo Scientific in August of 2003 (Appendix 3-4). The total living cover was 57.43%, of which 26% was overstory and 31.43% was understory species. The most common overstory species

were Douglas fir, Utah juniper and pinyon pine. The most common understory species was big sagebrush, with other native perennial species including Indian ricegrass and Salina wildrye. Species composition calculations reveal that woody species comprise 61.16% of the living understory cover, followed by grasses (33.36%) and forbs (5.47%). The number of woody species in the density measurements was estimated at 2,145 individuals per acre.

323.200 Elevations and Locations of Monitoring Stations

Raptor nest locations and elk and deer range are shown on Plate 3-2. The permit area contains no fish monitoring stations.

323.300 Facilities for Protection and Enhancement

Sections 333.300 and 358.500 contain additional discussion pertaining to protective measures to be taken by SCM in behalf of wildlife.

323.400 Vegetation Type and Plant Communities

Vegetative types and plant communities are outlined on Plate 3-1 and 3-1A of this application.

Vegetation types and plant communities on Plate 3-1 were interpreted directly from aerial .photographs except for selected areas. The inclusion of small vegetation units was limited and included the exclusion of small, long or narrow units of vegetation within other units. Vegetation depicted on Plate 3-1A represents vegetation ground surveyed and identified in the field.

Additional information pertaining to vegetation type and plant communities in Pace Canyon is provided in Appendix 3-4.

330 OPERATION PLAN

331 Measures Taken to Disturb the Smallest Practicable Area

No vegetative disturbance is anticipated beyond that encountered during construction of the surface facilities and fan facilities. The area to be disturbed by operational facilities will be kept to a minimum. Only facilities required to maintain the coal operation or satisfy environmental or safety requirements will be built.

Disturbed areas will be seeded with a mixture which will meet the requirements necessary to stabilize and provide cover; and with sufficient production and diversity characteristic to satisfy regulatory requirements.

Sections 341 describes the seed mixes to be used in both interim and final reclamation of the disturbed areas. For both the interim and final reclamation mixes, the vegetation data were evaluated to determine seed mixture constituents in light of production, cover, and diversity requirements. The soils report was reviewed to select species adapted to the soil's physical and chemical condition. Plant species were selected on the basis of wildlife needs and requirements. In addition, the operations plan was reviewed to determine the need for species with quick establishment, rapid spreading, and high erosion control potentials.

332 Description of Anticipated Impacts of Subsidence

Subsidence and its anticipated impacts are discussed in Sections 333 and 525 of this M&RP.

The potential effects of subsidence on nests could be one or several of the following:

- Displacement and relocation of nesting raptor(s)/birds,
- Injury to or death of nest inhabitants,
- Nest destruction.

Subterranean changes caused by subsidence to wildlife habitat is not currently understood. Subsidence could disrupt burrow systems destroying the home and habitat of burrowing mammals, reptiles, and amphibians and possibly cause death to some species in the immediate area. Since subsidence occurs systematically and in small areas at a given time, only localized populations will be impacted and only for a short period of time. Reproductive potential coupled with dispersal will facilitate recovery and negate the temporary population reduction.

Possible Short-Term and Long Term Impacts to Species Dependent on Springs, Creeks and Drainages

Impact to species dependent on springs, creeks and drainages could include disturbance of shelter, food, increased evaporation, rise and/or decrease in water temperature, water flow, and bank stability. Most species of wildlife are highly adaptable, while others with limited mobility are not. The mollusk (Physella virgata) and tiger salamander, mentioned in the TA on Task ID #1915) are dependent on water resources and may have been impacted by the drought conditions in Utah since 1999. Studies have shown that when habitat changes amphibians have either died or have moved to locations where water and habitat are more abundant. If they have moved, then should their habitat change again, they will likely move to a more suitable area..(Joseph M. Kiesecker - Dept. Of Biology, Pennsylvania State University; Andrew R. Blaustein and Lisa K. Belden - Dept. of Zoology, Oregon State University; Global Amphibian Assessment, Amphibia WebAmphibiaWeb (http://elib.cs.berkeley.edu; Alex Kirby, BBC News Online "Global amphibians in deep trouble" October 14, 2004; U.S. Water News Online, "Georgia drought harming wetland species" January 2002; UPI Science News, "Wildlife suffering from record drought" 8/30/02). There have been no impacts identified to springs, creeks or drainages within the Dugout Mine permitted area. Subsidence could in the future impact mullusk and salamander individuals. In the event of subsidence-related impact, the subsidence plan details measure that should repair material damage, including habitat for the state-listed sensitive mollusk and salamander species.

It is anticipated that streams within the permit area will not be significantly impacted as discussed in Chapter 5, Section 525.100. Interruptions of flow within perennial, intermittant, and ephemeral streams is not anticipated. Therefore, flows sustaining riparian and stream bank vegetation should continue during and after subsidence. Refer to Section 731.200 for a proposed monitoring and mitigation plan.

333 Plan to Minimize Disturbances and Adverse Impacts

General control and mitigation measures addressing potential operational related biological impacts will include the following:

- Minimizing the total area of disturbance,
- Design, construction, and operation of facilities to minimize biological impacts including barriers to wildlife movements,
- Design and installation of electrical equipment to minimize electrocution hazards,
- Establishment of stream buffer zones,
- Control and monitoring of surface discharges and water quality,
- Exclusion of wildlife from potentially hazardous areas, and
- Reclamation of disturbed areas when they are no longer needed.

The raptor survey by the UDWR in 1997 lists the three nests within Section 16, T13S, R12E, as being two inactive hawk nests and an old dilapidated golden eagle nest. The dilapidated nest and an inactive hawk nest are located over a area planned for mining during 2001 to 2005 (comparison of Plates 3-2 and 5-7). The second inactive hawk nest is within the area of potential subsidence but not over mining. Since the condition of these nests may change by the time mining reaches their location a plan for their protection or taking will not be determined at this time.

The nests in Section 16 will be monitored in the annual raptor survey. Nine months or the summer prior to the period of potential subsidence a determination by SCM, UDWR (Fish and Wildlife) and UDOGM will be made as to the method(s) to be used for the protection of the nest(s).

Section 22, T13S, R12E contains a raven nest and an active golden eagle nest. Bill Bates and Ben Morris concurred that "the raven nest in Section 22 was not of particular concern, but that the golden eagle nest should be monitored." See Sections 322.200, 333.300 and 358.100 for the raptor monitoring commitments. The golden eagle nest is located over a area planned for mining during 2000 to 2001 (comparison of Plates 3-2 and 5-7). This nest will most likely continue to be active. The plan to protect the nesting birds will include a survey of the nest location the year prior to

second mining to determine activity. In addition, the potential for laying, incubation or existence of young will be evaluated. The spring prior to the period of potential subsidence a determination by SCM, UDWR (Fish and Wildlife) and UDOGM will be made as to the method(s) to be used for the protection of the nest(s) (see Section 333.300).

Only one of the old dilapidated golden eagle nests surveyed in Section 23 during 1997 was surveyed during the 1998 raptor survey. The UDWR in Price and Salt Lake and the Fish and Wildlife Service both in Salt Lake and Denver have been contacted to determine the need for a "take permit" for this nest.

According to a comparison of the raptor surveys performed in 1995 and 1997, the nest inhabitants, conditions and existence may change. Therefore each nest should be evaluated separately and not as a collective. Methods of protection will be determined on a case by case basis using the "best technology available".

The raptor nests located in the survey taken in 1998 are plotted on Plate 3-2.

333.100 Minimized Disturbance to Endangered or Threatened Species

SCM will apply all methods necessary to minimize disturbances or any adverse effects to endangered and threatened species listed on the tables in Appendix 3-3.

333.200 Species and Habitats

All species and habitats within the permit area will be protected to the best of SCM ability. Wildlife habitat protection will be considered in the construction of facilities. For additional information, see Section 333.300.

333.300 Protective Measures

Upon notification or suspicion of raptor nests within the permit boundary cliff escarpment subsidence zone the following inventory will be taken to determine the potential actions to be taken by SCM.

- Verify the existence of a nest or nests,
- Verify occupation by birds/raptors, eggs or young,
- Determine the condition of nest or nests,
- Location of nest in relationship to recoverable resource (creation of table with nest location number and planned year for undermining).

The information collected in the inventory will be discussed with various agency personnel (i.e., UDOGM, USFWS, DWR, etc.). SCM and the various agencies will determine:

- a method of avoidance when possible,
- determine seasons/months for nests to be covered/uncovered,
- explore alternative methods of protection or removal, and
- develop a mitigation plan when needed.

The method(s) to be used will be determined prior to the period of potential subsidence.

SCM does not currently know the exact locations or thicknesses of recoverable resource, therefore to determine the potential loss of revenues is premature in relation to the avoidance of a raptor nest or nests. Each nest(s) and its corresponding occupant(s) and circumstances will be evaluated by a qualified person nine months or the summer prior to the period of potential subsidence. A determination by SCM, UDWR (Fish and Wildlife) and UDOGM will be made as to the method(s) to be used for the protection/avoidance/removal of the nest(s) (refer above to inventory listing in this section).

SCM commits to include wildlife awareness and protection training in it's annual training curriculum for employees and request the haulage contractors to provide the same training for it's employees.

Wildlife accustom to their current sources of food may be endangered with a change or enhancement of plant species. The improvement or addition of water developments can act to concentrate wildlife in a specific area, thus causing compaction to soils and over grazing of vegetation in an area. Areas which may be fenced to exclude livestock from an area, may also exclude wildlife, thus causing increased competition for food and territory in another area. Since SCM is unaware of the possible advantages or disadvantages to change in an area of habitat, we commit to use the best technology currently available to handle specific concerns, and which will benefit the greatest range of wildlife. Should the enhancement of habitat outside the disturbed area become necessary to attract wildlife away from the mining facilities, efforts will be coordinated with the UDWR.

Revegetation of disturbed areas, as part of the reclamation effort, will include a mixture of grasses, forbs, shrubs and trees which are beneficial to wildlife.

As part of the overall surface water monitoring program, SCM will monitor surface water flow to determine it's relationship to area subsidence. See Chapter 7 of this M&RP for a discussion of the water monitoring program.

Areas of potential mining will be surveyed for raptor nests prior to the beginning of mining and two seasons after mining has ceased. Pertinent data gathered in these surveys will be included in this M&RP and evaluated by qualified personnel to determine the method(s) to be used to avoid, protect, or take the raptor's nest(s).

Before a pesticide is used, the type and concentration will be approved in conjunction with UDWR or the Division.

During the construction of the Dugout Mine, wildlife in the area will most likely be displaced due to the noise and added human activity. Construction, mining, supplier personnel and their corresponding equipment will be required to stay within the disturbed area boundary during construction activities. Loading, unloading, and staging of materials and equipment designated for the construction of the Dugout Canyon Mine facilities will be done within the disturbed area boundary. Fluids used to maintain construction equipment will be stored in a safe method, to prevent contamination.

340 RECLAMATION PLAN

The reclamation plan will include the following: seed mix, rate of seedlings per acre, stocking rates for shrub and tree plantings, planting techniques, fertilization methods, and amount and frequency of application. The fish and wildlife plan for the permit area is outlined in Section 342.

341 Revegetation

The reclamation plan for final revegetation is included in this section for lands to be disturbed by coal mining and reclamation operations.

The short-term goal of this revegetation plan is the immediate stabilization of the disturbed sites through erosion control. This objective will be achieved through controlled grading practices, proper seedbed preparation to encourage rapid plant establishment, inclusion of rapidly establishing species in the seed mixture to be planted, and mulch application.

The long-term goals are to establish useful, productive range and wildlife habitat. These goals will be attained through the selection and placement of desirable and productive plant species, and a commitment to monitor and maintain revegetated areas throughout the bond liability period.

341.100 Schedule and Timetable

The reclamation timetable is outlined in Figure 5-3. The reclamation monitoring schedule is outlined in Table 3-3.

The planting of seeds and seedlings will be undertaken at the most feasible time following disturbance activities. Planting will begin after the plant growth medium has been replaced. Final reclamation grasses, forbs, shrubs, and seedlings will be planned for planting in late August through early October. Should the planting window close prior to completion of seeding, a sterile, quick growing ground cover will be planted to control erosion during the winter months. The final reclamation seed mixture will be planted the following spring and fall.

341.200 Descriptions

Species and Amounts of Seed. All revegetated areas within the disturbed area boundary will be planted with the seed mixes listed below:

Interim Seed Mix (Drilled Quantities)

SPECIES	# pls/acre
Indian ricegrass	2
Western wheatgrass	3
Slender wheatgrass	3
Thickspike wheatgrass	4
Kentucky Bluegrass	1
TOTAL	13

Final Reclamation Seed Mix #1 (Drilled Quantities)

SPECIES	# pls/acre
Grasses, Forbs, and Shrubs	

Bluebunch Wheatgrass	3.0
Western wheatgrass	4.0
Slender wheatgrass	1.0
Thickspike wheatgrass	1.0
Idaho fescue	1.0
Indian ricegrass	2.0
Blueleaf aster	0.5
Blue flax	1.0
Palmer Penstemon	0.5
Northern sweetvetch	1.0
Mountain big sagebrush	0.5
Louisiana sagebrush	1.0
Fourwing saltbrush	1.0
Bitterbrush	1.0
Curl-leaf mountain mahogany	1.0
TOTAL	19.5

Transplants and/or seedlings per acre

Snowberry	75
Utah serviceberry	75
Pinyon pine	200
Utah juniper	200
TOTAL	550

The rate of seeding per acre when broadcast will be doubled of the rate of seeding when drilled.

Final Reclamation Seed Mix #2 (Drilled Quantities)

SPECIES	# pls/acre
Grasses, Forbs, and Shrubs	
Mountain brome	3.0
Western wheatgrass	5.0
Indian ricegrass	3.0
Slender wheatgrass	3.0
Thickspike wheatgrass	3.0
Kentucky bluegrass	1.5
Columbine	1.0
Blue flax	1.0

Palmer penstemon	1.0
Northern sweetvetch	.5
Louisiana sagebrush	1.0
TOTAL	23.0

Transplants and/or seedlings per acre

Carex spp.	500
Horsetail	500
TOTAL	1000

Streambanks/channel bottom will receive the following trees[a] and shrubs

	Seedlings/acre
Narrowleaf cottonwood	250
Rocky Mountain maple	250
Willow [b]	4000
Woods rose	1000
Snowberry	250
Utah serviceberry	250
Blue elderberry	250
Chokecherry	250
Golden current	250
TOTAL	6750

* UDWR requested no conifers be included in the riparian seed mix.

(b) Cuttings/transplants and/or seedlings will be used. The quantity of willows to actually be planted may vary due to the availability of suitable area within the channel for planting. CFC requests permission to consult with a botanist and UDOGM at the time of reclamation to determine the final number of willows to be planted and to prepare a plan for potential planting and replanting should seedling be lost due to pestilence. It may be beneficial to plant the willows over a period of years as the stream has time to deposit sediment, thus providing natural areas for planting. If deemed appropriate by the botanist and UDOGM at the time of reclamation the 4,000 willows per acre commitment will be met.

The rate of seeding per acre when broadcast will be doubled of the rate of seeding when drilled.

Final Reclamation Seed Mix #3 (Broadcast Quantities)

SPECIES	# pls/acre	# pls/sq. ft.**
Grasses, Forbs, and Shrubs		

Salina Wildrye (379,500 seeds/lb)*	2.5	22
Indian Rice Grass (162,000 seeds/lb)*	3.5	13
Galleta Grass (150,000 seeds/lb)*	3.5	12
Muttongrass (2,000,000 seeds/lb)*	0.5	23
Mtn. Snowberry (54,000 seeds/lb)*	4.0	5
Wyoming Big Sage (2,500,000 seeds/lb)*	0.5	29
Rocky Mountain Penstemon (260,000 seeds/lb)*	0.5	14
Yarrow (2,770,000 seed/lb)*	0.1	6
Louisiana Sagewort (3,000,000 seed/lb)*	0.1	6
TOTAL	15.2	130

* Native Plants

** Rounded nearest whole seed

Seed Mix No.1 will be used on the majority of the Dugout Canyon disturbed area (Pinyon-Utah juniper - upland very steep shallow loam, Plate 3-1A) . Seed Mix No. 2 will be used to reseed the riparian area of Dugout Creek (Plate 3-1A). Hydrophytic vegetation will be planted during the low flow of the reclamation channel. Seed Mix No. 3 will be used to reclaim the Pace Canyon Fan Portal facilities. Although, native forbs were found in the reference area for the proposed Pace Canyon disturbance, the species were not readily available for purchase, therefore they have not been included in the seed mix.

Method Used for Planting and Seeding. The surface will be ripped to between 6 and 24 inches to reduce surface compaction. Ripping will be completed on approximately 4-foot centers. Final ripping depths will be determined by the soil materials being ripped. On slopes too steep for ripping the soil materials will be at a minimum pocked/gouged.

Following ripping, topsoil (or substitute topsoil) will be applied to the ripped surface and left in a roughened state. Topsoil samples will be collected and sent to the laboratory for analysis to determine fertilizer requirements. The area will be broadcast fertilized if recommended using a hand held "cyclone-type" seeder in smaller areas, and applied with hydroseeding equipment in larger areas. Where possible, a ripper equipped tractor or other appropriate equipment will be used to incorporate the fertilizer into the soil. On slopes too steep to accommodate the use of a tractor or other appropriate equipment the fertilizer will be incorporated with the track hoe bucket teeth or other Division approved technology. All nutrients will be applied in a single application.

Seeding for grasses, shrubs, and forbs will be accomplished by drilling and/or broadcasting. All equipment used will be equipped with metering devices. Except as noted below all areas will be fertilized and seeded using the same methodology.

Broadcast seeding will be used on slopes too steep to accommodate a tractor.

Seedlings/transplants will be planted by first clearing a circle of 12 to 24 inches in diameter from which mulch materials and grasses will be cleared. The hole will be dug 4 to 6 inches deeper than the seedling roots to accommodate positioning of the seedling. Fertilizer will either be mixed with the loose soil from the hole or a fertilizer tablet will be planted with each seedling. After seedling placement, the hole will be backfilled with soil and fertilizer then lightly tamped. A gently sloped basin will be formed around the seedling to catch water. The basin will be mulched to aid in moisture retention.

Technical notes (No. 23, September 1993) and project information data published by the NRCS were consulted to provide detail for planting the riparian area, willows, and cottonwoods.

"Rhisomatous willows usually should be planted on inside curves of a stream channel, they are rarely found on sharp outside curves in nature. Shrubby species are normally planted on outside curves of a stream channel as a continuous barrier. Plant the entire reach with the same species. Taller shrubby species may also be planted mid-bank to upper bank and on the floodplains for

diversity and additional stabilization or as a buffer zone. Plant tree species up the bank from the shrubby species or on top of the bank."

"Plug, containerized, bare-root, potted and paper-sleeve planting are best used on mid-bank to upper bank or floodplains where long periods of inundation or water erosion is minimized, but where adequate moisture is available through natural precipitation. Where plant have a low risk of physically being pulled or eroded out due to shallow rooting systems during establishment and where there is no competing vegetation."

Transplants (cuttings, whips, plugs, bare-root, potted) "less than 3/8" inch diameter are not recommended because energy reserves in the stems are limited. Pole cutting (3/4" large diameter unrooted stems) are recommended for most planting from water line to mid-bank. Pole cuttings of willows and cottonwoods are also recommended on upper-banks and flood plains where the water table is relatively deep."

"Cutting length is largely determined by the depth to the mid-summer water table and erosive force of the stream at the planting site. Planting can occur at the water line, up the bank, and on top of bank in relatively dry soil, as long as cuttings are long enough to reach into the mid-summer water table. Make sure, several inches of cutting are in the mid-summer water table, 3-4 buds are above ground, and no less than ½ the total length is in the ground"

"However the larger the cutting diameter, the longer the cutting should be, and the deeper the hole should be. Larger diameter and longer cuttings will be needed for more severely eroding sites and where the water table is deeper."

"Plant the cuttings about 1 - 3 feet apart for shrubby types and 6-12 feet apart for tree types. In areas where you expect erosion, plant shrubby types 1 - 1.5 feet apart to better protect the banks. Exact spacing between tree-types further up the bank and shrubby types below should be based on crown characteristics and height. General ideas on spacing can be found in the Idaho Tree Planting Handbook."

"A tractor-mounted post hole digger, a one or two man post hole digger, a soil auger, a large bar, a planting shovel, or just punching the cutting into most soil have all been used successfully in the past to plant willows."

The reclaimed riparian area will be planted with cuttings/transplants/seedlings using the following guidelines as suggested by NRCS literature.

- The Idaho Tree Planting Handbook or similar instructional material will be consulted during reclamation to determine the spacing for the planting of shrubs and tree cuttings/transplants/seedlings. Trees and shrubs will be interspersed with areas seeded with grasses and forbs.
- Species will be planted with a tractor-mounted post hole digger, a one or two man post hole digger, a soil auger, a large bar, a planting shovel, or punching into soil.
- Tree species will be planted up the bank from the shrub species or on top of the channel slope.
- Shrubs species will be planted between the top of the riprap and the top of the channel slope.
- Willows will be planted in the riprap on the channel side slopes and the edges of the channel bottom.
- Stems for planting will be 3/8" diameter or larger.
- Length of cuttings will be determine by where they are planted (i.e. water line, top of slope or etc.), but will be long/large enough to reach into the anticipated water table, with 3-4 buds above ground.

The cuttings/transplants/seedlings will be interspersed with areas of grass and forbs in a mosaic pattern as in the current riparian area. The shrub density data from the 1997 survey designates the trees within the riparian area to be: 27.2 maples, 96.5 junipers, 107.4 cottonwoods and 28.8 firs per acre. SCM proposes to plant 250 maples and 250 cottonwoods per acre. Junipers and firs have not been included in Seed Mix #2 at the requested of the UDWR. The 500 maples and cottonwoods

should be sufficient to achieve bond release if the mortality rate is between 10 and 25% (Dan Ogle, NRCS Plant Material Specialist). NRCS guidelines are considered recommendations and SCM understands they are ultimately responsible for meeting revegetation success standards.

If cottonwoods are planted as cuttings or poles they will be long enough to reach the water table and large enough in size (1 - 3" diameter) to have sufficient energy reserves for survival. An irrigation program will be considered if the cottonwoods are planted as transplants. The particular character of cottonwood to be planted will be determined at the time of reclamation.

Transplants with root balls will be planted as described previously and with the recommendations of published literature available at the time of reclamation. Channel slopes as currently designed, vary between 3 and 4 feet.

Figure 3-1 is provided to approximate the location of each planting zone described above, not as a typical design of the stream channel slopes, their height, width or length.

Seeding methods are discussed previously in this section.

The Division has requested information concerning the average high and low water mark for the reclaimed Dugout Creek channel as a means of evaluating the potential survivability of phreatophytes which will be planted during reclamation. However, from a hydrologic standpoint the concept of average high and low water marks in vague for a channel since the levels are both time- and probability-dependent. For example, it is common to speak of the water-surface profile, which might be expected during the 10-year, 7-day low-flow periods or the 25-year, 6-hour precipitation event, but not the "average" low flow or the "average" high flow. SCM will provide such data if it can be meaningfully defined and will assist with revegetation success. In any event, cuttings/transplants will be planted to facilitate successful re-establishment of the riparian vegetation, with the depth of planting being determined by a consensus of the published literature which is available at the time of reclamation and the drilling of periodic holes along the reclamation channel to determine the depth to the water table.

Mulching Techniques. Following seeding, the disturbed areas will be mulched with a Division-approved mulching material. For bonding calculations, wood fiber mulch will be the assumed mulching application. Application will be initiated at the tip of the slope and working downhill. Mulch will be applied at the rate of 2000 pounds per acre and anchored with a tackifier.

In consultation with the Division, should a determination be made that a slope(s) is too steep to retain a mulch application, the slope(s) will be pocked/gouged and will receive no mulch application. Mulching and revegetation will not be attempted on sheer rock outcrops.

Mulch used for the mitigation project in 1998 of the upper portion of Dugout Canyon is discussed in Section 322.200.

Irrigation, Pest and Disease Control. No irrigation is planned and pesticides will not be used unless previously approved by the Division.

Measures Proposed for Revegetation Success. SCM will plant species of the same seasonal variety as those existing prior to the proposed disturbance.

To effect bond release at the end of the 10-year responsibility period, SCM will measure required vegetation variables (ground cover, herbaceous productivity, and woody plant density) as outlined on Table 3-3. Measurement will occur during the same time each year using appropriate techniques.

Productivity sampling will involve use of a sample random technique whereby 1 to 2 m^2 plots (rectangular in shape) will be clipped by life form for all current annual production. Sample parameters determined for these variables will be used to test the success of revegetation during each of these years and will prove establishment of adequate cover, suitable productivity, reasonable density, and adequate species composition.

The estimated parameters for the variables of ground cover, herbaceous productivity, and woody plant density will be obtained in a statistically-adequate manner. Refer to Section 356.200 for a discussion on revegetation success standards.

The revegetative success standard for cover in the Pinyon-Juniper area is 66% and 85% for the riparian area in Dugout Canyon.

Pace Canyon

Method Used for Planting and Seeding. The surface will be ripped to approximately 18 inches. On slopes too steep for ripping the soil materials will be at a minimum pocked/gouged.

Following ripping, a minimum of 12" of topsoil/growth medium will be applied to the ripped surface and left in a roughened state. One ton of certified noxious weed free hay/straw per acre will be crimped into the topsoil. The surface will then be pocked and gouged, the pocking will be done with the bucket of a backhoe, the holes(pocks) will be approximately the width and depth of the bucket. The area soils will then be sprayed with Seed Mix #3 mixed with a small amount of wood fiber mulch by hydroseeding equipment. Following the seeding the area soils will be sprayed with wood fiber mulch (one ton per acre) mix with tackifier (60 lbs. per acre). Mulching and revegetation will not be attempted on sheer rock outcrops.

Success of revegetation and stabilization of the fan portal facilities area will be evaluated during each growing season as outlined on Table 3-3, when cover and compositions studies are most feasible. Sample parameters determined from reference area data will be used to test the success of revegetation and will prove establishment of adequate cover, suitable productivity, reasonable density, and adequate species composition. Student's t-tests were employed to compare the total living cover and total woody species density of the proposed disturbed area and it's reference area (Mt. Nebo, Appendix 3-4).

TABLE 3-3
RECLAMATION MONITORING SCHEDULE

	YEAR									
	1	2	3	4	5	6	7	8	9	10
QUALITATIVE SAMPLING	X	X	X	X	X	X	X	X	X	X
QUANTITATIVE SAMPLING										
Cover		X	X		X				X	X
Frequency		X	X		X				X	X
Woody Plant Density		X	X		X				X	X
Transplant Survival	X	X	X		X					
Productivity									X	X

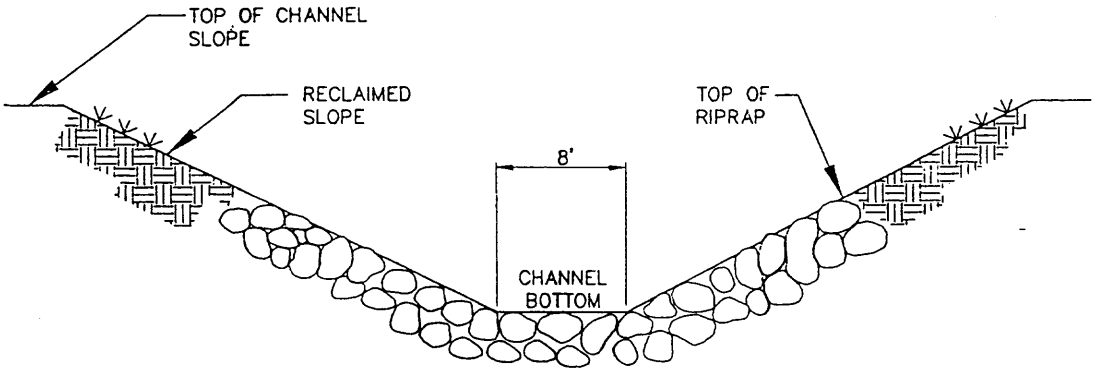

NOT TO SCALE

INCORPORATED
EFFECTIVE:
MAR 3 1 2000
990
UTAH DIVISION OIL, GAS AND MINING

FIG 3-1. RECLAMATION CHANNEL SLOPE DEFINITIONS

EarthFax

341.300 Greenhouse Studies, Field Trials or Other Equivalent Studies

SCM will comply, should the Division provide evidence to support additional testing to demonstrate that reclamation as required by the State Program can be accomplished according to information provided in this M&RP.

342 Fish and Wildlife

Revegetation to sustain and improve wildlife habitat will be SCM's primary concern following the termination of mining operations. High value habitats will be restored and enhanced beyond their pre-mining conditions since the area is being redisturbed after previous mining. The plan is consistent with Sections 330 and 358.

342.100 Enhancement Measures

Enhancements of the stream channel are discussed in Sections 322.200 and 762.100. No additional enhancements are planned.

342.200 Plants Used for Wildlife Habitat

The plant species in the reclamation seed mix are consistent with those presently grown in the permit area, with additional species added for diversity as requested by the Division. Section 341.200 contains the proposed reclamation seed, tree, and shrub mix.

Nutritional Value. The nutritional value will be consistent with that of vegetation in the surrounding areas.

Cover. The goal of SCM is to establish plant species which will provide sufficient cover for the fish and wildlife of the area. See Section 341 for additional discussion.

Ability to Support and Enhance. The plant species included in the proposed reclamation mixes have the ability to support and enhance the fish or wildlife habitat after the release of the performance bonds. Shrubs and trees will be planted to enhance survival and provide wildlife habitat. The trees and shrubs in the final reclamation seed mix will be used to ensure establishment of an enhanced vegetation community within the disturbed site. The disturbed riparian community will be restored and enhanced during reclamation efforts.

342.300 Cropland

Cropland is not a postmining land use.

342.400 Residential, Public Service and Industrial Land Use

No residential, industrial or public service use is planned at the present time for the permit area following the termination of mining.

350 PERFORMANCE STANDARDS

351 General Requirements

SCM commits to conduct all operations in accordance with the plans submitted in Sections R645-301-330 through R645-301-340 of the permit application.

352 Contemporaneous Reclamation

Reclamation activities prior to final reclamation will, to the extent feasible, be performed contemporaneously with mining operations. Areas to receive interim reclamation will be seeded with the interim seed mix.

The interim seed mix (Section 341.200) will be used to establish a shallow rooting cover of grasses for those areas disturbed during the development of the Gilson Well pad and relocation of Dugout Creek (west fork). The riparian area associated with the disturbance will receive reclamation as dictated in the stream channel alteration permit and Section 341 of the M&RP. The Pace Canyon Fan Portal topsoil stockpiles will be contemporaneously reclaimed using the only the grass seeds specified in Seed Mix No. 3.

Revegetation will not be done in areas required to be kept barren of vegetation such as areas around mine ventilation openings.

353 Revegetation: General Requirements

A vegetative cover will be established on all reclaimed areas to allow for the designated postmining land use of livestock grazing and wildlife habitat. Other than a road which will be retained through the facilities area following reclamation to allow access to private land within the permit area, all roads within the disturbed area boundary will be reclaimed. The vegetative cover will be in accordance with the approved permit and reclamation plan. All species of vegetation to be used in reclamation activities, whether planted by seed or seedling, will be approved by the Division (i.e. interim, mitigation, #1 and #2 seed mixes). Seed Mix No. 3 will be used at the Pace Canyon Fan Portal facilities during reclamation, the entire reclaimed surface will receive this seed mix except for the realigned road segment. The road is used as access by the BLM and private land owners.

353.100 Vegetative Cover

The seed mix proposed for revegetation is intended to provide vegetative cover that will be diverse, effective, and permanent. The seed mixture was selected with respect to the climate, potential seedbed quality, erosion control, drought tolerance, and the mixture's ability for quick establishment and spreading.

Native Species. The reclamation vegetative mixture (seeds, shrubs, and trees) will be comprise of species indigenous to the area, capable of achieving the postmining land use as approved by the Division. Diversity of species should allow ultimate utilization of plants by wildlife and domestic livestock.

The revegetative species will be purchased from suppliers who will certify their percentages of purity, germination, hard seed, and percentages of maximum weed seed content.

Extent of Cover. The vegetative cover will be at least equal in extent to the cover as determined by the range site sampling as discussed in Section 341.200. The Pace Canyon Fan Portal area will be compared to the reference area shown on Plate 3-1E.

Stabilizing. The vegetative cover mixture is capable of stabilizing the soil surface from erosion.

353.200 Reestablished Plant Species

Compatible. The reestablished plant species have been selected to insure their compatibility with the approved postmining use.

Seasonal Characteristics. The revegetation plant species will have the same growing season as the original vegetation, or in this instance, as the adjacent areas.

Self-generation. The reestablished plants are species capable of self-generation and plant succession.

Compatibility. The seed mix suggested for revegetation contains plants native to the area and compatible with the plant and animal species of the permit area.

Federal and Utah Laws or Regulations. The seed mixture purchased to revegetate the mine area will contain no poisonous or noxious plant. No species will be introduced in the area without being approved by the Division.

353.300 Vegetative Exception

SCM does not require vegetative exception at this time.

353.400 Cropland

The permit area contains no land designated as cropland.

354 Revegetation: Timing

SCM will follow the recommended guidelines for revegetation as discussed in Section 341.100.

355 Revegetation: Mulching and Other Soil Stabilizing Practices

Mulch and/or other soil stabilizing practices (pocking, gouging, roughening, etc.) will be used on all areas that have been regraded and covered by topsoil or topsoil substitutes (see Section 341.200). SCM will exercise care to guard against erosion during and after application of topsoil and will employ the necessary measures to ensure the stability of topsoil on graded slopes.

356 Revegetation: Standards for Success

The standards for revegetation success are discussed in this section and in Section 341.200.

Range Site Success Standards for Reclamation (Dugout Canyon Facilities):

	Pinyon/Utah Juniper	Riparian
Ground Cover	66%	85%
NRCS Production	800 lbs/acre	1500 lbs/acre
Shrub-Tree Density/Stocking	2200 stems/acre	2200 stems/acre
Diversity	2 Tree/shrub species	2 Tree/shrub species
	3 Grass species	3 Grass species
	2 Forb species	2 Forb species

For a species to be counted as one of the species that constitute vegetation diversity it must exist in the actual plant community at a minimum of 5%.

The sampling methods to be used during reclamation will be specific to the requirements at the time of reclamation. Nonetheless, according to the currently approved UDOGM guidelines, these sampling methods would be used: sample adequacy, cover (line interception), density (belt transects or plots) and productivity (clipping and/or NRCS estimation). The Jaccard's Community Coefficient will be used to calculate acceptable plant similarity and diversity.

During the Fall of 1997, productivity for the disturbed area was determined by George Cook, a range conservationist for the NRCS. Mr. Cook determined the Pinyon/Utah Juniper area to be in good condition with 800 lbs/acre air dry weight production. The riparian area was determined to be in fair condition with 1500 lbs/acre of air day weight production. Should the NRCS determination of production be insufficient to satisfy the requirement for standards of success, SCM commits to sample productivity at a corresponding range site.

Range sites for reclamation comparison purposes were chosen by a qualified person contracted by SCM and in cooperation with the Division. Range sites in Fish Creek Canyon representing both the pinyon/juniper and riparian vegetation types were sampled for cover in September, 1998 (Appendix 3-1). These specific range sites correspond with the cover quantities sampled for the

pinyon/juniper and riparian areas within the Dugout Mine disturbed area boundary. The cover data for each range site was submitted to the Division for evaluation and approved for reclamation comparison (Appendix 3-1). The designated range sites will be used as a reference area until final revegetative bond release has been issued. The location of the area to be used for range site comparison is designated on Plates 3-1 and 3-1D .

The sites for sampling were chosen (September, 1998) in cooperation with Paul Baker (UDOGM).

356.100 Success of Revegetation

The success standards for approval will be judged on the effectiveness of the vegetation for postmining land use and the standards outlined in Section 353.

Within the Utah Division of Oil, Gas and Mining Vegetation Guidelines (Revised February, 1992) three methods for sampling vegetation are discussed; reference areas, range sites and the baseline data method. Each method describes the requirements for its subsequent use, however the sampling of diversity was not discussed within any of these methods.

The baseline data method could not be used at the Dugout Canyon Mine site due to previous disturbance by mining. Likewise the reference areas method could not be used since reference areas were not approved by the Division. Therefore the range site method has been adopted for use at the Dugout Canyon Mine.

The range site number used for comparison of revegetation success is 033XY342UT, upland very steep shallow loam (Pinyon-Utah Juniper). The area sampled by Patricia Johnston in 1997 met the requirements of Method #2 - Range Sites of the UDOGM Vegetation Guidelines, February 1992. Legible copies of data sheets from the sampling are included in Appendix 3-1.

Sampling Techniques (Dugout Canyon) . SCM will comply with the standards for success, statistically valid sampling techniques for measuring success, and the approved methods outlined in the Division's "Vegetation Information Guidelines" for sampling.

Sampling Techniques (Pace Canyon)- Permittee will comply with the standards for success, statistically valid sampling techniques for measuring success, and the approved methods outline in the Division's "Vegetation Information Guidelines, Appendix A" for sampling.

The sampling methods to be used during reclamation will be the "best technology currently available" at the time of reclamation. Nonetheless, according to the currently approved UDOGM guidelines, these sampling methods would be used: sample adequacy, cover (line interception), density (belt transects or plots), productivity (clipping) and the "best technology currently available" will be used to calculate acceptable plant similarity and diversity.

Standards for Success. The standards for success will include criteria representative of unmined lands in the area of the permit and as discussed in Section 356.200. In **Pace Canyon,** the standards for success will include criteria representative of undisturbed lands in the area of the disturbance (reference area), as means to evaluate ground cover, production and stocking of the reclaimed site. The sampling techniques for success in Pace Canyon will use a 90 percent statistical confidence interval as required by R645-301-356.120.

356.200 Standards for Success

Standards of success will be applied in accordance with the approved postmining land use as described in this section.

Grazing Land or Pasture Land. The ground cover and production of living plants on the revegetated area will be at least equal to the specified success standards.

Cropland. There is no area designated as cropland within the permit area.

Fish and Wildlife Habitat. The success of revegetation for fish and wildlife habitat will be determined on the basis of tree and shrub stocking and vegetative ground cover. Minimum stocking and planting arrangements will be those approved by the Division on the basis of local and regional conditions. Cover success will not be less than that required to achieve the approved postmining land use.

Industrial, Commercial or Residential. The postmining land use for the permit area is not designated for industrial, commercial, or residential use.

Previously Disturbed Areas. Dugout Canyon contains the remains of earlier mining operations. The site was not reclaimed or revegetated following the earlier operations. Pace Canyon contains the remains of earlier mining, disturbance by logging activities, and road access disturbance. The area was neither reclaimed or revegetated following the aforementioned disturbance.

Due to the previous disturbance of the sites, SCM will restore the vegetative ground cover to that of the surrounding area as discussed in Section 341.200 and the ground cover will be adequate to control erosion.

356.300 Siltation Structure Maintenance

Siltation structures will be maintained until removal is authorized by the Division and the disturbed areas have been stabilized and revegetated. Siltation structures will be removed

no sooner than two years after the last augmented seeding. For additional details on siltation structures, see Section 542 of this M&RP.

356.400 Removal of Siltation Structures

The land on which siltation structures are located will be revegetated in accordance with the reclamation plan discussed in Sections 353 through 357 of this M&RP.

357 Revegetation: Extended Responsibility Period

SCM will be responsible for the success of revegetation for a period of 10 years following reclamation seeding of the reclaimed mine area or upon Division bond release.

357.100 Extended Period Begins

The period of extended responsibility will begin the year after the disturbed area has been reseeded.

357.200 Vegetative Parameters

Vegetation parameters will equal or exceed the approved success standard during the last 2 years of the responsibility period. The success standards are outlined in Section 356.

357.300 Husbandry Practices

SCM will comply with Division-approved husbandry practices which will be normal conservation practices within the region of the mine. These practices may include disease, pest, and vermin control; and any pruning, reseeding, and transplanting required.

358 Protection of Fish, Wildlife and Related Environmental Values

SCM will minimize disturbances and adverse impacts on fish, wildlife, and their related environments as outlined in Section 333.

The intermittent flow of streams within the lease area does not support a population of game fish; therefore, there are no fisheries within the disturbed area to protect. In addition, the streams in Pace and Rock Canyons have intermittent flow and do not support a population of game fish. See Chapter 7 of this M&RP for methods to protect water sources in the area.

Proposed surface disturbance associated with mining activities will be reviewed by the DWR and UDOGM in reference to wildlife exclusionary periods. A letter concerning mitigation for drilling disturbance in 2004 - 2006 is located in Appendix 3-3.

358.100 Existence of Endangered or Threatened Species

Coal mining will not be conducted where it's operation might jeopardize the existence of any endangered or threatened species. The mining of coal will not result in the planned destruction or adverse modification of these species critical habitat, unless approved by appropriate agency(ies).

Any state or federally listed endangered or threatened specie will be reported to the Division upon its discovery. A ground nest survey for raptors and bird species of special interest was performed prior to site disturbance by a qualified person. A letter report of the ground nest survey is included in Appendix 3-3. Mining operations will proceed in accordance with Division stipulations. These stipulations also apply to reclamation operations at the Dugout Canyon Mine.

Lists of threatened, endangered, and sensitive species are included in Appendix 3-3. In addition, Appendix 3-3 contains 2003 and 2004 survey data for Mexican Spotted Owls and a letter from the DWR concerning installation of nesting boxes to satisfy mitigation requirements.

358.200 Bald and Golden Eagles

Coal mining and reclamation operations will be conducted in a manner protective of bald and golden eagles. SCM will promptly report any golden or bald eagle nests found within the permit boundaries and will proceed with operations in accordance with the Division's stipulations for protection of those nests. Refer to Section 333 for a discussion of methods of nest protection during potential subsidence.

358.300 Taking of Endangered or Threatened Species

SCM understands that there is no permission implied by these regulations for taking of endangered or threatened species, their nests, or eggs.

358.400 Replacement of Wetland and Riparian Vegetation

The Division will be consulted on the best technology to replace and enhance the riparian vegetation to be disturbed.

358.500 Manmade Wildlife Protection Measure

Electric Power Lines. All power lines within the Dugout Canyon Mine disturbed area will comply or be modified to be raptor safe and comply with the guidelines of REA Bulletin 61-10, "Power Line Contacts by Eagles and Other Large Birds". Refer to Plates 4-1 and 5-2 for power pole locations.

Potential Barriers. When possible, structures built by SCM in Dugout Canyon will be designed and built to provide corridors of passage to large mammals.

Pond Protection. Fences or other appropriate methods will be used to exclude wildlife from ponds containing hazardous or toxic materials. However, SCM does not intend to store hazardous or toxic materials in ponds.

REFERENCES:

Blumer, Ralph J., 1979. Environmental Analysis, pp 25-26.

Hoag, Chris J. , How to Plant Willows and Cottonwood Dormant Pole Cuttings for Riparian Rehabilitation. Riparian/Wetland Project Information Series No. 4

Kuchler, A.W. 1975. Potential Natural Vegetation of the Conterminous United States. Amer. Geo. Soc., Spec. Publ. No. 36. Map.

USDA, 1988. Soil Survey of Carbon Area, Utah. Soil Conservation Service.

USDA, 1993. How to Plant Willows and Cottonwoods for Riparian Rehabilitation. Soil Conservation Service, Technical Notes Plant Materials No. 23.

Utah Division of Wildlife Resources, 1990. Fauna of Southeastern Utah and Life Requisites Regarding Their Ecosystems. Pub. No. 90-11.

Utah Division of Wildlife Resources, 1979. Study to Determine Effects of Coal Development on Wildlife in Southeastern Utah. Prepared for Eureka Energy Company.

Utah Division of Wildlife Resources, 1979a. Fish and Wildlife Resources Information - Sage Point-Dugout Canyon Project. Prepared for Eureka Energy Company.

APPENDIX 3-2

UDWR Report

The Study to Determine the Effects of Coal development on Wildlife in Southeastern Utah
(1979 - 1981)

Pages 1-10 and 12-14 are missing from this document. When copied the document did not have these pages and the pages are currently assumed to be blank.

Intentionally Blank

Intentionally Blank

APPENDIX 3-4

Pace Canyon Fan Portal
Vegetation and Wildlife Data

PULL ORIGINALS

FROM

JANUARY 4, 2005

SUBMITTAL

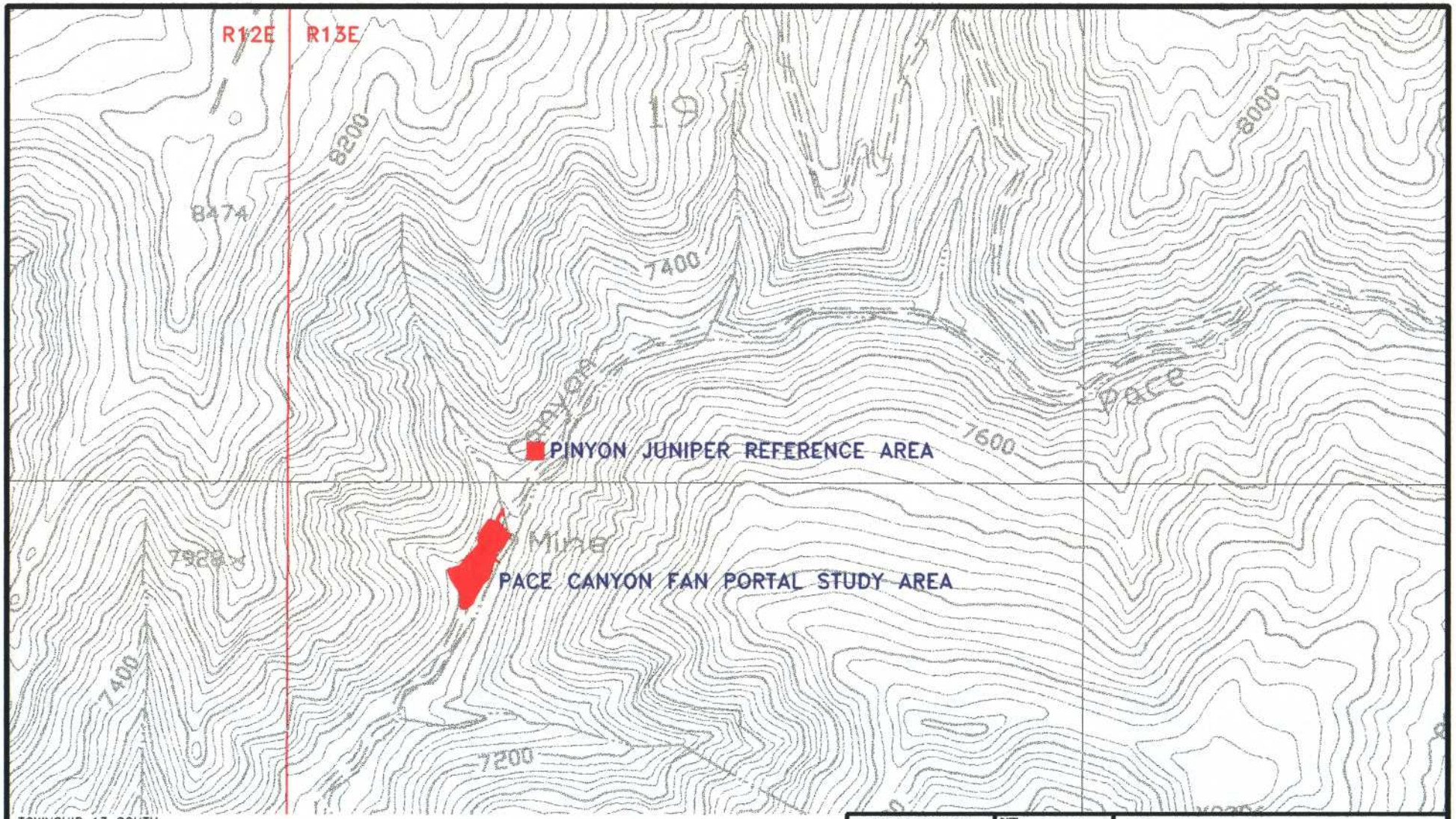

TOWNSHIP 13 SOUTH

NOTE:

VEGETATION AT THE DUGOUT CANYON MINE PROPOSED FAN BREAKOUT AREA, 2003, MT. NEBO SCIENTIFIC, INC.

REGISTERED PROFESSIONAL ENGINEER
No. 189797
LAYNE D. JENSEN
1-18-05
STATE OF UTAH

REVISIONS OR UP-DATES			DATE: 11-17-04	
NO.	DATE	BY	DESIGNED BY:	LDJ
1	1-25-05	LDJ	DRAWN BY:	SWF
			CHECKED BY:	VSM
			SCALE:	1"=1000'

FILENAME: G:\UC801\07\PERMIT DWG\PLATE3-1E.DWG\11-17-04

Canyon Fuel Company, LLC
Dugout Canyon Mine

PACE CANYON FAN VEGETATION AND REFERENCE AREA

P.O BOX 1029
WELLINGTON, UTAH 84542

DRAWING OR MAP NUMBER
PLATE 3-1E

EarthFax Engineering, Inc.

CHAPTER 4

LAND USE AND AIR QUALITY

TABLE OF CONTENTS

Section — Page

410 Land Use 4-1

411 Environmental Description 4-1

411.100 Premining Land Use 4-1
411.110 Land Use Map 4-2
411.120 Land Capability 4-3
411.130 Land Use Description 4-4
411.140 Cultural and Historical Resources Information 4-5
411.200 Previous Mining Activity 4-7

412 Reclamation Plan 4-8

412.100 Postmining Land Use Plan 4-8
412.200 Land Owner or Surface Manager Comments 4-9
412.300 Suitability and Capability 4-9

413 Performance Standards 4-10

413.100 Postmining Land Use 4-10
413.200 Determining Premining Uses of Land 4-10
413.300 Criteria for Alternative Postmining Land Uses 4-10

414 Alternative Land Use 4-10

420 Air Quality 4-10

421 Air Quality Standards 4-11

422 Compliance Efforts 4-11

423 Monitoring Program 4-11

424 Fugitive Control Plan for Production Rates Less than One Million Tons Per Year 4-12

TABLE OF CONTENTS (Continued)

Section — Page

425 Additional Division Requirements 4-12

REFERENCES 4-13

LIST OF PLATES

Plate

4-1 Land Uses

LIST OF APPENDICES

Appendix

4-1 Air Quality Approval Order and Information

4-2 Land Uses

4-3 Cultural and Historical Studies - SITLA Lease and Adjacent Area

CHAPTER 4

LAND USE AND AIR QUALITY

410 LAND USE

This section of the permit application includes descriptions of the premining and proposed postmining land use(s). Additional information can be found in the following amendments: Methane Degassification Amendment (August 2003), Refuse Pile Amendment (February 2003), and the Leachfield Addendum A-1 (March 2001). The remainder of the State Lease ML-48435-OBA (SITLA Lease) was incorporated into the Dugout Canyon Mine permit area in 2004.

411 Environmental Description

A statement of the conditions and capabilities of the land to be affected by coal mining and reclamation operations follows in this section.

411.100 Premining Land Use

The permit area has been primarily utilized as rangeland for livestock and wildlife habitat. Some crops related to the livestock industry have been developed along the creek bottoms adjacent to Soldier Creek Road. However, no crops have been raised within the permit area. Recreational use of the permit area is limited due to lack of access through private property.

The predisturbed area boundary outlined on Plate 5-4 reflects disturbance prior to 1965. The boundary was compiled from a 1980 map of the pre-mining topography prepared by Eureka Energy Company. According to historical data the Dugout Canyon area was last mined in 1964.

Pace Canyon

Archaeological inventories in the area were completed in 1980 by AERC who surveyed the access road into Pace Canyon to the Snow Mine site which is the currently proposed location of the fan site facility. The proposed fan site does not encompass the mine itself, but merely the facility area associated with the Snow Mine. The Snow Mine (42CB292) facility was active in 1906 but had its primary production period from 1932 - 1940. When inventoried the site was in moderately fair condition and avoidance was recommended in the 1980 inventory, however the site was **not** recommended for nomination to the National Register of Historic Places (Hauck &Weder: 1980). During an inventory by Senco-Phenix in 2001 the BLM requested a second evaluation of the Snow Mine site utilizing current National Register of Historic Places (NRHP) criteria. Senco-Phenix recommendation was "the area has been heavily logged since the initial recordation and the area around the mine extensively disturbed by heavy equipment, probably dozed. The foundation has been destroyed and the coal loadout has been collapsed and pushed into the bed of Pace Creek. The rock-covered adit and adjacent stonewall are still there on the other side of Pace Creek (east).....Other than recent trash no artifacts were observed. The integrity of the site has been basically destroyed. The site is not recommended for the NRHP" (Senulis: 2001). The 2001 evaluation also stated "no historic properties will be affected and no further cultural resource inventory is necessary".

In October 2003, Senco-Phenix performed an additional survey of the Snow Mine area in conjunction with a exploration drilling project proposed and approved by the BLM in 2003. The surveys mentioned in this section are on file with the BLM an/or in the Confidential Binder.

411.110 Land Use Map

Plate 4-1 designates the prominent land uses within and adjacent to the permit boundary. Pace Canyon has a corral just above a locked gate in Section 25, Township 13 South Range 12 East (Plate 4-1). The main livestock watering source is Pace Creek and it's tributaries in Sections 19, 20, 21 and

22, Township 13 South Range 13 East (Plate 4-1) and the Clark's Valley Reservoir, approximately 3 miles southwest of the Pace Fan Portal site (outside of area covered by Plate 4-1).

411.120 Land Capability

The area surrounding Dugout Canyon supports a variety of land uses including industrial, agricultural, and recreational. Carbon County has zoned the permit area for mining and grazing.

Energy resource development occurs throughout the region in the form of coal mining, oil and gas production and tar sands development. A methane gas recovery operation was formerly running in conjunction with the Soldier Canyon Mine which lies west of the Dugout Canyon Mine permit boundary. The Soldier Canyon Mine has been in operation since 1976.

The major plant communities in the Dugout Canyon lease area are identified in Section 321. No cultivated lands lie within the permit boundary, due to the limiting terrain and lack of water for irrigation. Refer to Section 321.100 for forage production per acre.

The permit area is used for grazing cattle, but sheep have grazed in the area previously. Valley bottoms receive little grazing due to their limited forage and narrowness except in the vicinity of water sources. Steep slopes receive limited grazing pressure from livestock because of the steep inclines and the lack of water. Flatter mesa tops and rolling terrain receive heavier pressure because of easier movement by livestock and more available forage. Grasses are preferred forage for cattle; however, cattle will eat forbs and shrub species.

The use of land for grazing is dictated by the condition of and access to the specific areas. At the land owners discretion land may be used for grazing one year and not used again for five years. However, grazing should continue to be considered a potential land use for the permit and adjacent areas.

The permit area supports limited recreation due to inaccessibility to privately owned lands.

411.130 Land Use Description

The permit area lies within undeveloped lands used primarily as wildlife habitat and for livestock grazing. Five grazing allotments are located in or adjacent to the permit area (Plate 4-1). The allotments support 429 head of cattle from May through October. The grazing allotments as listed below are administered by the U. S. Bureau of Land Management (BLM): Pine Canyon Allotment No. 24089 supports 50 head of livestock, Dugout Allotment No. 34039 supports 60 head, Pole Canyon Grazing Allotment No. 34092 supports 144 head, Cow Canyon Allotment No. 34032 supports 95 head, and Pace Canyon Allotment No. 24085 supports 80 head of livestock. The grazing allotment within the vicinity of the fan portal facilities is the Pace Canyon Allotment No. 24085, both the existing road and proposed facility site occur within this allotment. The existing Pace Canyon road passes near the main watering sources and holding corral for livestock on this allotment.

Recreation in the permit and adjacent areas includes camping, hunting, and hiking from Spring to late Fall. Recreational use is light due to restricted access to privately-owned lands. There are no developed or inventoried recreation campgrounds within the permit boundary. No impact is expected to the current recreational uses of the area. SCM will preserve these uses into the postmining period.

During deer and elk hunting seasons, the accessible lands are used extensively by the public. Fishing is limited at best, with restricted access and no known game fish populations existing in the permit area streams.

Logging operations completed in 1996 by Cascade Resources within and adjacent to the permit boundary are shown on the Sale Area Map "Exhibit A" in Appendix 4-2. Exhibit A was prepared by Cascade Resources of Wellington, Utah who estimated harvesting six million board feet from the areas designated on the exhibit. Their logging contract expired on 12/31/96.

Timber within the disturbed area is very limited and therefore not economical for recovery by the logging industry. Exhibit B included in Appendix 4-2 shows SCM's timber inventory including areas logged and areas yet to be logged.

The nearest crop production (alfalfa) is approximately 4 miles southwest of the permit boundary adjacent to the Soldier Creek Road. Cultivation occurs on a year to year basis, depending upon the water available for irrigation.

411.140 Cultural and Historic Resources Information

Cultural resource information and maps identifying cultural and historical study areas are located within the confidential folder of information pertaining to this permit. An intensive cultural resource evaluation of the permit area has been conducted by Dr. Richard Hauck, Ph.D. of Archeological-Environmental Research Corporation (AERC). As part of this evaluation he also made a record search at the State Historic Preservation Office (SHPO) and the National Register of Historic Places (NRHP).

Cultural resource evaluations were performed on two sites within the permit boundary. Field evaluations on the historic Dugout Creek Mine (42CB 205/291) and on a prehistoric rock art site (42CB 92) were conducted by the AERC staff on November 20 - 22, 1995. Site 42CB 92, situated in the SE1/4 of Section 22, T13S, R12E, contains a series of pictograph panels first documented by Dale Berge in 1977. The historic Dugout Creek Mine locus is situated in the NW1/4 of Section 23.

The historic components of the Dugout Creek Mine (42CB 205/291) are not considered to be significant and do not need to be avoided or mitigated prior to the development of the mine site. The prehistoric rock art site (42CB 92) is a significant resource and is eligible for nomination to the NRHP. Site 42CB 92 has been reported to the NRHP and BLM offices during previous cultural and historical studies of the area in 1977, 1980, and 1995 but is not currently listed on the NRHP.

The rock art panels are unstable and could be destroyed if blasting for road expansion is done within a 600-foot radius of the panels. SCM will make every effort to protect these rock art panels without drawing unnecessary attention to their location. The panels have been preserved primarily because the general public does not know of their existence. SCM will strive to maintain this condition.

The AERC report provides descriptive and valuational information for the two sites.

Cultural and historical inventories associated with the SITLA lease tract and adjacent areas are located in Appendix 4-1 and 4-3. This information should be held confidential by the Division.

The information in Appendix 4-3 was collected starting in 1980 and the last report was completed in 2003. According to information collected from the Price office of the BLM on March 23, 2004 and conversations with Mr. David Miller, there were no sites with artifacts considered for registration found in the areas surveyed and reported in 1980 through 1991. The conclusions were the same in the surveys conducted in 2001 - 2003. A letter from John Senulis, Archeologist with Senco Phenix detailing their file search and surveys of the area has been incorporated into Appendix 4-3. The letter is addressed to Kenny Wintch, the SITLA Archeologist and a copy has been sent to Mr. Dykman at SHPO. The letter states " No sites eligible for nomination to the National Register of Historic Places have been found in or adjacent to the permit expansion area. It is very unlikely that future survey will reveal sites eligible.....Furthermore all activity will be underground with no surface disturbance. For these reasons a finding of "no effect on historic properties" is appropriate and archeologic clearance without stipulations is recommended."

Cultural and Historic Resource Maps. Maps and photographs for the evaluated cultural and historical sites are contained in the confidential folder.

There are no cemeteries, public parks, or units of the National System of Trails or the Wild and Scenic Rivers System located within the Dugout Canyon Mine permit boundary. The National Register of Historic Places was consulted by AERC and no registered historic or prehistoric properties will be affected by the proposed mine development.

SCM agrees to notify the Division and SHPO of previously unidentified cultural resources discovered in the course of mining operations. Arch Coal Company has a registered professional geologist on staff assigned to Dugout Canyon Mine available to confirm vertebrate fossil material discovered during earth moving activities during construction of the Pace Canyon Fan Portal site. SCM also agrees to have any such cultural resources evaluated in terms of NRHP eligibility criteria. Protection of eligible cultural resources will be in accordance with Division and SHPO requirements. SCM will also instruct its employees that it is a violation of federal and state laws to collect individual artifacts or to otherwise disturb cultural resources.

Coordination with State Historic Preservation Officer. AERC contacted SHPO concerning the Dugout Canyon Mine site and a copy of their report was forwarded to SHPO. The National Register of Historic Places was consulted by AERC and no registered historic or prehistoric properties will be affected by the proposed mine development.

411.200 Previous Mining Activity

Coal mining has occurred within Dugout Canyon since 1925. D. J. Collins prospected for and initially hand-developed the Red Glow Mine in the Gilson seam on the east side of Dugout Canyon in 1925. The west side of Dugout Canyon was first mined in 1952 by E.S.O. Coal Company when they mined the Rock Canyon seam.

The Knight Ideal Coal Company mined the Rock Canyon and Gilson coal seams located on both sides of the canyon between 1958 and 1964. Knight Ideal Coal Company extracted 1,326,000 tons of coal by conventional room and pillar method with partial pillar recovery. The area in Dugout Canyon disturbed by mining has changed hands through the years but no coal has been extracted since 1964.

Limited exploration within existing portals was conducted by Pacific Gas and Electric in 1979 and by Sunedco in 1982. Following each exploration, the portals were resealed with earthen fill. During 1995, SCM reopened four portals, two on the east and two on the west side of Dugout Canyon. The

portals on the east side were resealed but the portals on the west side were left open and fenced for security and safety.

Remnants of the Fish Creek and Pace Canyon Mine which operated in the early 1900's also exist within the permit boundary. Both mine sites have been considered for preservation by SHPO but were ineligible for nomination to the National Register of Historic Places. Pace Canyon contains the remains of earlier mining, disturbance by logging activities, and road access disturbance. The area was neither reclaimed or revegetated following the aforementioned disturbance.

412 Reclamation Plan

412.100 Postmining Land Use Plan

All uses of the land prior to mining and the capability of the land to support prior alternate uses will remain available throughout the life of the mine except within the disturbed-area boundary.

SCM intends the postmining land use to be consistent with the present land use, which is livestock grazing and wildlife habitat. Final reclamation activities such as grading and seeding as detailed within this M&RP will be completed in a manner to provide lands able to parallel the premining land use. In areas where surface disturbance will result from mining operations, soil reclamation and revegetation will restore the areas to wildlife habitat and livestock grazing capabilities.

The activities associated with the mining operation will follow accepted standards or proven techniques. Erosion hazards will be minimized and, where possible, eliminated. Evidence of abandoned improvements will be removed. Reclamation will restore the land and vegetation to as near a natural and productive condition as possible.

Efforts to restore wildlife habitat are discussed in Chapter 3 of this M&RP. Specific periods of habitation by wildlife species of the disturbed and adjacent area are discussed in Appendices 3-2

and 3-3. Since the disturbed area is privately owned the timing and extent of use for grazing will be made after reclamation by the landowner.

412.200 Land Owner or Surface Manager Comments

The land surface within the permit boundary is owned by various entities, including the State of Utah and Canyon Fuel Company, LLC (CFC). The disturbed area is on surface lands owned by both CFC , BLM and the State.

The leases contained in Appendix 1-1 list responsibilities accepted by CFC in regard to the State of Utah's lands within the permit boundary. The leases contain requirements concerning use and maintenance of their administered lands. CFC is obligated by these leases to notify the Division for their determination as to whether this mining operation will be detrimental to the State of Utah's interest. By submitting this M&RP, CFC is indicating that the operation will not be detrimental to the State's interests and the obligation is being met. A letter of affirmation from the State of Utah concerning proposed land use is included in Appendix 4- 2.

The Bureau of Land Management (BLM) Right-of-Way application (UTU-76601) in Appendix 1-3 lists the responsibilities accepted by CFC concerning the BLM lands included in the permit boundary. A letter from the BLM concerning proposed land use for Pace Canyon Fan Portal area and UTU-76601 will be included in Appendix 4-2.

Refer to Chapter 1 for responsibilities CFC accepts in association with Federal Lease U-07064-027821.

For clarification as to relationship of SCM to CFC, refer to Section 112.

412.300 Suitability and Capability

Final fills will not contain excess spoils.

413 Performance Standards

The performance standards for the areas to be reclaimed for postmining land use are contained in this section.

413.100 Postmining Land Use

Postmining land uses are discussed in Section 412.100. The postmining lands will be reclaimed in a timely manner and capable of supporting such land uses (see Chapters 2, 3, 5, and 7). The postmining roads are discussed in Section 542.600.

413.200 Determining Premining Uses of Land

Postmining land uses will be as stated in Section 412.

413.300 Criteria for Alternative Postmining Land Uses

No alternative postmining land uses have been planned.

414 Alternative Land Use

No alternative postmining land uses have been planned.

420 AIR QUALITY

This section includes descriptions of plans to comply with the Clean Air Act and applicable Utah or federal statutes and regulations pertaining to air quality standards.

Dugout Canyon Mine (called the Sage Point-Dugout Canyon Mine under previous ownership by Eureka Energy Company) was granted a PSD permit by EPA on December 17, 1979. On February

12, 1982 the EPA approved air quality regulations adopted by the State of Utah. Subsequently, an Approval Order (AO) was issued on September 28, 1983 by the Utah Air Conservation Committee for the Sage Point-Dugout Canyon Mine. However the planned mining operations were never implemented.

Information collected for the PSD and the 1983 AO have been submitted to the Utah Division of Air Quality in a request for an amended approval order. This amendment was requested because of a change in surface equipment and a decrease in proposed coal removal from 5.2 million tons to 2 million tons per year.

421 Air Quality Standards

Dugout Canyon's mining activities will be conducted in compliance with the requirements of the Federal Clean Air Act and the Utah Air Conservation Rules.

422 Compliance Efforts

No mining activities will be conducted without a current AO from the Utah Division of Air Quality (DAQ). All activity will be conducted in compliance with the conditions established in the AO. A Notice of Intent (NOI) to construct has been submitted in accordance with DAQ document "Preparing Your Notice of Intent". Preconstruction conferences will be held as required by DAQ personnel. Emissions will be estimated using procedures and factors supplied by DAQ. A copy of the Approval Order and supporting information can be found in Appendix 4-1.

423 Monitoring Program

An NOI will be submitted to DAQ requesting approval for a production rate of 2 million tons per year. This rate exceeds immediate production plans, but approval at this level will preclude the necessity of reapplying if future production plans should increase. This approach is appropriate since an AO is subject to specific operating conditions rather than to a time period and thus does not expire at

the end of a 5-year period as does the approval of the mining permit. If operating conditions change sufficiently to invalidate the AO, a new NOI will be prepared.

The operating conditions are specified in the NOI and form the basis of the AO. All monitoring requirements and fugitive dust control practices as established by the AO will be followed by SCM. Should additional requirements be established under the provisions of R645-301-244.100 or R645-301-244.300, these requirements will also be followed by SCM.

424 Fugitive Control Plan for Production Rates Less than One Million Tons Per Year

During startup, or other situations where production is less than one million tons per year, the same procedures established in Section 423 will be followed and will be subject to the conditions of the AO issues by DAQ. See Section 523 of this M&RP for coal extraction estimates for the first 5 years of mining.

425 Additional Division Requirements

Should an air quality monitoring program be required by the Division while operating at a production rate of less than one million tons per year, SCM will provide sufficient data to judge the effectiveness of the fugitive dust control plan.

REFERENCES:

Berge, D. L., 1976. The archaeological potential of the sage point coal mine, surface facilities and railroad spur, central Utah.

Division of Air Quality, 1994. Preparing Your Notice of Intent, Fifth Edition.

Hauck, F.R. and Dennis G. Weder, 1980. Intensive archeological surface evaluations of the proposed Sage Point-Dugout Canyon project in Carbon County, UT. Archeological Environmental Research Corporation paper No. 19. Salt lake city, UT.

Julander, 0. 1955. Deer and cattle range relations in Utah. Forest Science 1 (2):130-139.

APPENDIX 4-2

Land Uses

United States Department of the Interior

BUREAU OF LAND MANAGEMENT
Price Field Office
125 South 600 West
Price, Utah 84501
www.ut.blm.gov

TAKE PRIDE IN AMERICA

IN REPLY REFER TO:
3482
U-50722, SL-051279-063188
U-07064-027821, UTU-69635
(UT-070)

MAR 03 2005

CERTIFIED MAIL - RETURN RECEIPT REQUESTED
Certified No. 7003 1010 0005 2128 9823

MAR 14 2005

Erwin Sass
Dugout Canyon Mine
Canyon Fuel Co., L.L.C.
P.O. Box 1029
Wellington, Utah 84542

Subject: Post-Mining Land Use for the Pace Canyon Fan Project (T. 13 S., R. 13 E., Section 30, Federal Coal Lease U-07064-027821), Permit Amendment C/007/039, February 2005.

Dear Mr. Sass:

The Bureau of Land Management (BLM) has reviewed your plans for reclamation and post mining land use of the above subject area. The BLM concurs with the post-mining reclamation and land-use plans proposed for the effected lands as stated in the Permit Application Package for the Dugout Mine C/007/039. Post-mining land use would be wildlife habitat, livestock grazing and incidental recreational use.

The BLM should be notified in the future if your plans are modified regarding the reclamation or post-mining land use for the area. Additionally, please notify the BLM when reclamation work is performed at the conclusion of this activity.

If you have any questions, please contact Mr. Stan Perkes at 801-539-4036

Sincerely,

for Patrick Gubbins
Field Manager

cc: USO-Chief, Branch of Solid Minerals

THAYNE TRUST
SURFACE USE AGREEMENT

SURFACE USE AGREEMENT

THIS SURFACE USE AGREEMENT (this "Agreement"), dated as of November ___, 1999 ("Effective Date"), is by and between **Canyon Fuel Company, L.L.C.**, ("CFC"), whose mailing address is 6955 Union Park Center, Suite 540, Midvale, Utah 84047, and **Milton and Ardith Thayn Trust** ("Thayn"), whose mailing address is 7730 East Hwy 6, Price, Utah 84501.

Recitals

Thayn is the surface owner of lands located in Carbon County, Utah, which are described on **Exhibit "A"** attached hereto (the "Thayn Lands"). CFC is a coal mining company and owns and operates the Soldier Canyon Mine and Dugout Canyon Mine (the "Mines"). CFC holds rights under Federal coal leases and pursuant to mine permits granted or to be granted by the Utah Division of Oil, Gas and Mining (the "Mine Permits") to develop and mine underground coal. Thayn has agreed to grant to CFC the nonexclusive use by CFC of the surface of the Thayn Lands to facilitate its coal mining operations in exchange for rights and services from CFC.

Agreement

IN CONSIDERATION of the mutual covenants contained in this Agreement and other good and valuable consideration, the receipt and sufficiency of which are hereby acknowledged, the parties agree as follows:

1. Grants and Services to Thayn.

   (a) CFC shall lease to Thayn for farming and grazing the following lands and grazing and water rights described in **Exhibit "B"** attached hereto : (1) lands owned by CFC located in the Clark Valley (the "Clark Valley Lease Lands"); (2) water rights owned by CFC appurtenant to the Clark Valley Lease Lands (the "Clark Valley Water Rights"); (3) state and federal grazing rights held by CFC related to the Clark Valley Lease Lands (the "Grazing Rights"); and (4) water rights represented by 50 shares of water stock in the Wellington Canal Company owned by CFC (the "Water Shares"). The Clark Valley Lease Lands, the Clark Valley Water Rights, the Grazing Rights and the Water Shares shall all be leased to Thayn under the "Lease Agreement" attached hereto as **Exhibit "C."**

(b) CFC hereby grants to Thayn, for the term of this Agreement and for so long thereafter as agreed in writing by the parties, the non-exclusive, limited use of the Dugout Canyon unimproved road lying north of the Dugout Canyon Mine as may be reasonable and necessary for Thayn's cattle ranching activities, provided that such use shall (i) not interfere with the regular activities of the Mines; (ii) comply with all CFC and applicable federal, state and local rules and regulations imposed on the use of the road; and (iii) not include use of the road by any third party including hunters, tourists or sight-seers.

(c) Upon written notice to CFC, Thayn may request that CFC monitor the flow of springs, streams and seeps located on the Thayn Lands that Thayn reasonably believes may be impacted by CFC's underground mining operations. Upon receiving the written request, CFC shall meet with Thayn to discuss the monitoring sites and to reach a mutually acceptable schedule for such monitoring, provided that CFC shall only be required to monitor such sites for flow. Nothing in this Agreement shall modify CFC's water monitoring program as required by the Mine Permits.

(d) Thayn shall have the non-exclusive right to submit bids as an independent contractor for earth-moving projects conducted on the Thayn Lands that CFC elects, in its sole discretion, to contract to a third party. Thayn shall have a preference for selection as the contractor for the project provided that Thayn can demonstrate to the reasonable satisfaction of CFC that (i) Thayn owns or has right to use the necessary equipment for the project, (ii) Thayn carries insurance coverage required by CFC's risk management procedures for the project, (iii) Thayn has the necessary licenses and permits to conduct the project, and (iv) Thayn's proposed bid is competitive with other bids solicited by CFC for the project. Notwithstanding the foregoing, nothing in this Agreement shall be construed to require CFC to use a third party contractor for any project on the Thayn Lands or to conduct a bid process to select a third party contractor for work conducted on the Thayn Lands or on behalf of Thayn.

2. Surface Use Grants to CFC. CFC shall have and is hereby granted an easement on, over, and through, and a right to use, the surface of the Thayn

Lands as may be necessary and appropriate for the following purposes in connection with mining coal by underground mining methods: (a) conduct subsidence and soil and water sampling, and carry out raptor, wildlife and other environmental studies; (b) conduct exploration drilling and analyses of subsurface conditions by all reasonable means; (c) place or install minor mechanical instruments such as geophones, geo-seismic lines and the like to monitor underground, mine-related activities and results; (d) drill production holes, place and relocate pipelines, and place surface facilities to develop, vent or remove coalbed methane gas, provided such use shall not interfere with regular activities of Thayn's ranching and hunting, and further provided, CFC shall coordinate such activities with Thayn to minimize disruption to Thayn's ranching and hunting activities; and (e) exclusively subside the surface of the Thayn Lands. Except as provided in Sections 3 and 5, CFC shall have no obligation to pay to Thayn any compensation for use of the Thayn Lands.

3. Compensation for Surface Facilities.

(a) In the event CFC is required to place temporary or semi-permanent structures on the Thayn Lands (such as methane venting, exhausting equipment, methane drainage pump stations, pipelines and utilities) in connection with exercising its rights hereunder, CFC shall reasonably compensate Thayn for the use of the Thayn Lands for such structures at rates comparable to other operations in the area. (By way of example, coalbed methane venting and degasification wells are currently compensated at rates in the range of $2,000 to $3,500 per year until the well is plugged and reclaimed.) The parties shall use their best good faith efforts to negotiate compensation for any permanent structure placed on the Thayn Lands.

(b) CFC shall pay Thayn $2,000 for each exploration drill hole placed on the Thayn Lands. Thayn acknowledges that $2,000 represents fair and reasonable compensation for each such drill hole, provided, however, if any such exploration drill hole is subsequently used for coalbed methane venting, Thayn shall be entitled to additional compensation in accordance with the provisions of Section 3(a).

4. Care of Thayn Lands.

(a) CFC shall use and maintain the Thayn Lands in a careful, safe, and lawful manner and shall conduct its operations in compliance with all applicable federal, state and local laws, rules and regulations. CFC shall only use the Thayn Lands for the purposes set forth herein and shall not permit the use or occupancy of the Thayn Lands by any person other than CFC, its employees, agents and contractors.

(b) CFC shall provide Thayn with written notice prior to undertaking any activities on the Thayn Lands. Thayn's concurrence shall be obtained regarding the location of any proposed material surface disturbance, including but not limited to drilling exploration boreholes. Thayn's permission shall not be unreasonably withheld.

(c) CFC shall give special siting consideration to potential borehole locations near springs and seeps on the Thayn Lands.

(d) CFC shall repair or replace any improvements upon the Thayn Lands damaged by CFC's operations. CFC shall reclaim all surface areas disturbed as a result of CFC's operations and shall implement a noxious weed control program for all such disturbed areas for a period of not less than four years from the date of reclamation reseeding.

(e) All drilling or other similar activities and all CFC-related facilities, such as "mud pits,"that could result in injury or death to livestock shall be fenced or otherwise isolated to protect livestock. CFC shall repair or reclaim to the extent techonogically and economically feasible subsidence damage to the Thayn Lands that could be harmful to livestock.

(f) CFC shall maintain insurance coverage for its activities conducted on the Thayn Lands consistent with coverages customary for the coal industry and in compliance with all applicable regulatory requirements and shall provide Thayn with a copy of all insurance certificates naming Thayn as an additional insured against CFC's operations conducted pursuant to this Agreement.

(g) As required by and in conformance with applicable law, CFC shall replace any water supply owned and beneficially used by Thayn for

domestic, agricultural, or other legitimate use from an underground or surface source where the water supply has been adversely impacted by contamination, diminution, or interruption proximately resulting from CFC's mining operations.

5. Term.

(a) This Agreement shall be for a term of years beginning on the Effective Date and continuing for a period for the life of the Mines plus two (2) years, but in no event longer than twenty (20) years. For purposes of this Agreement, the life of the Mines shall end upon permanent closure of the Mines and cessation of all operations for the production and sale of coal from the Mines.

(b) CFC shall have no obligation to make any rental or other payment to maintain this Agreement in full force and effect. The parties acknowledge and agree that the Lease Agreement shall constitute full and fair consideration for this Agreement. In the event the Lease Agreement terminates or expires as provided therein prior to a date twenty (20) years from the Effective Date, CFC shall pay to Thayn the sum of $5,000 annually on the anniversary date for the remaining term of this Agreement in lieu of the rights granted under the Lease Agreement ("Rental Payment").

(c) The monetary payment terms set forth in Sections 3 and 5(b) of this Agreement ("Payment Terms") shall be adjusted for inflation on the seventh (7th) and fourteenth (14th) annual anniversaries after the Effective Date based on the cumulative changes in the Consumer Price Index (CPI), or other generally-recognized economic pricing index, for the preceding seven-year period. The proposed adjustments shall be calculated by CFC and communicated to Thayn in writing within thirty (30) days after the seventh and fourteenth anniversaries. All adjustments to Payment Terms shall be effective as of the seventh and fourteenth anniversary dates and shall otherwise apply prospectively and shall not apply to payments previously made under this Agreement. All other claims for adjustment of non-monetary terms of this Agreement, including allegations of non-compliance with any express term, shall be subject to the provisions of Section 7.

(d) Nothing in this Section 5 shall, nor shall it be interpreted to, amend, modify or waive any term or provision of Section 2 that grants rights to CFC to the Thayn Lands. Thayn shall have no right to claim a default of or to terminate this Agreement based on the Payment Terms readjustment provisions of this Section 5.

6. Title. Thayn warrants generally the title to the surface of the Thayn Lands and represents that Thayn has all necessary right and authority to grant to CFC the property rights and privileges conveyed hereunder.

7. Breach of Obligations. If either party believes that the other party has not complied with any express term, obligation or covenant of this Agreement, then in such event such party shall notify the other party in writing setting out specifically the details regarding the alleged breach or default. The party in default shall have thirty (30) days after receipt of the notice within which to cure or commence to cure all or any part of the breach or default alleged by the other party. If the defaulting party fails to cure or commence to cure the alleged default or breach as required, then the non-defaulting party shall have the option, but not the obligation, to submit the matter to binding arbitration as provided in this Agreement.

8. Arbitration. Disputes arising under this Agreement between the parties based upon any alleged breach of any of the obligations hereunder, which the parties are unable to resolve, shall be finally settled in accordance with the provisions of the Utah Arbitration Act by a single arbitrator. The arbitrator shall have broad power to grant relief for any dispute submitted pursuant to this Section 8, including without limitation termination of this Agreement. The arbitration proceedings shall be conducted in Price, Utah. CFC shall be responsible for all costs incurred in arbitration, including all fees and expenses of the arbitrator. Either party may enforce any arbitration award by instituting an action in the appropriate state or federal district court.

9. Indemnification. CFC shall indemnify, defend and hold harmless Thayn from and against all claims, costs, losses and expenses of any and every kind or character (including without limitation, mechanic liens and additional taxes) that are caused by or arise out of CFC's operations conducted on the Thayn Lands pursuant to this Agreement, provided that Thayn shall not be indemnified for matters expressly covered by this

Agreement, including without limitation the grant to CFC to subside the surface as a result of its underground mining operations.

10. Assignment. CFC's rights under this Agreement may not be assigned or sublet without the prior written consent of Thayn, which consent shall not be unreasonably withheld, provided that CFC may assign or sublease its interest hereunder without consent if such assignment or sublease is to an affiliate, parent or subsidiary of CFC, or to a party which acquires all or substantially all of the assets of CFC or the Mines.

11. Notices. All notices shall be in writing and addressed as follows:

If to Canyon Fuel Company:

President
Ark Land Company
CityPlace One
Suite 300
St. Louis, MO 63141-7056
(314) 994-2700

With a copy to:

Canyon Fuel Company, L.L.C.
Soldier Canyon Mine
P.O. Box 1029
Wellington, UT 84542
Attn: David G. Spillman
(435) 636-2872

If to Thayn:

Milton and Ardith Thayn Trust
7730 East Hwy 6
Price, UT 84501
Attn: David Thayn
(435) 472-4251

Notices are sufficient if delivered by hand, sent by facsimile transmission or deposited in the United States mail, postage prepaid and addressed to the appropriate addresses.

12. CFC Permits. Thayn expressly agrees to not oppose CFC's application for or issuance of the Mine Permits or for such other permits or approvals necessary or required to conduct coal mining operations at the Mines that may relate to or involve the Thayn Lands. In the event that CFC's Mine Permits are materially revised to require access or use of the Thayn Lands not granted by this Agreement, the parties shall use their respective best good faith efforts to negotiate such required access or use.

IN WITNESS WHEREOF, the parties have executed this Agreement as of the Effective Date.

CANYON FUEL COMPANY L.L.C.

By James E Flowers

Its VP + Treasurer

Milton and Ardith Thayn Trust

By Milton Thayn

Its Trustee

STATE OF ~~UTAH~~ Missouri)
City)ss:
~~COUNTY~~ OF St Louis)

The foregoing instrument was acknowledged before me this 22nd day of November, by James E Flowers who being by me duly sworn did say that he is the VP + Treasurer of Canyon Fuel Company, L.L.C.,

and that the foregoing Surface Use Agreement was signed on behalf of said limited liability company.

NOTARY PUBLIC

Mary C. Hamilton

Residing at: City of St. Louis

My Commission Expires:
9-14-2003

MARY C HAMILTON
Notary Public - Notary Seal
STATE OF MISSOURI
ST. LOUIS CITY
MY COMMISSION EXP. SEPT 14,2003

STATE OF UTAH)
)ss:
COUNTY OF CARBON)

DIONNE M. OMAN
NOTARY PUBLIC • STATE of UTAH
53 E. SMITH CIRCLE
PRICE UTAH 84501
COMM. EXP. 12-15-2002

The foregoing instrument was acknowledged before me this 15 day of November, by Milton Thayn, the signer of the foregoing Surface Use Agreement, who duly acknowledged to me that he executed the same as Trustee of and for the benefit of the Milton and Ardith Thayn Trust.

NOTARY PUBLIC

Dionne M. Oman

Residing at: Price, UT

My Commission Expires:
12-15-2002

EXHIBIT "A"
to
Surface Use Agreement

Thayn Lands

T13S, R12 E, Salt Lake Meridian, Utah
Sec. 12: E/2 SE/4;
Sec. 13: E/2; SE/4 NW/4; E2 SW/4; NW/4 SW/4;
Sec. 24: All;
Sec. 25: NW/4.

T13S, R13 E, Salt Lake Meridian, Utah
Sec. 7: S/2SW/4, NW/4SW/4;
Sec. 18: S/2, NW/4, S/2NE/4, NW/4NE/4;
Sec. 17: SW/4, S/2SE/4, NW/4SE/4;
Sec. 19: All Except Lot 4;
Sec. 20: All;
Sec. 21: S/2, S/2N/2, NW/4NW/4;
Sec. 22: SW/4, S/2NW/4;
Sec. 27: W/2;
Sec. 28: All;
Sec. 29: All;
Sec. 30: All Except Lots 1 and 2;
Sec. 33: N/2N/2.

EXHIBIT "B"
to
Surface Use Agreement

CLARK VALLEY LEASE LANDS

(approximately 4,461 acres):

Township	Range	Section	Description
14 South	12 East	3	S½SE¼; S½SW¼
"	"	5	S½SE¼
"	"	8	NE¼NE¼;W½NE¼;SW¼;E½NW¼
"	"	9	SE¼
"	"	10	E½;SW¼;E½NW¼;SW¼NW¼
"	"	11	SE¼;NE¼;E½SE¼;SW¼SE¼;W½
"	"	13	W½;SW¼;S½NW¼;NE¼SW¼
"	"	14	All
"	"	15	E½;SW¼;E½NW¼
"	"	17	NW¼;SE¼;E½SW¼;NW¼SW¼
"	"	18	E½NE¼
"	"	20	N½NE¼
"	"	21	NE¼NW¼;W½NW¼;SE¼NE¼
"	"	22	NW¼

CLARK VALLEY WATER RIGHTS

Water Right No. (Irrigation & Stockwatering)	Water Right No. (Stockwatering)	
91-23	91-410	91-447
91-85	91-411	91-448
91-86	91-412	91-449
91-409	91-413	91-450

Exhibit B
to Surface Use Agreement

Water Right No. (Irrigation & Stockwatering)	Water Right No. (Stockwatering)	
91-457	91-414	91-451
91-491	91-415	91-452
91-492	91-416	91-453
91-493	91-417	91-456
91-494	91-418	91-458
91-495	91-419	91-459
91-604	91-420	91-460
91-605	91-421	91-461
91-606	91-422	91-465
91-607	91-426	91-466
	91-427	91-467
	91-428	91-468
	91-429	91-469
	91-430	91-470
	91-443	91-591
	91-444	91-3729
	91-445	91-3730
	91-446	

GRAZING RIGHTS

BLM Grazing Allotment #4079 (North Clark Valley) Approx. (Acreage 9,480)
Period of Use - March 20th-June 5th

State Grazing Permit #21722 (Approx. Acreage 680)

WATER SHARES

50 Shares of water stock in The Wellington Canal Company from Certificate No. 881

EXHIBIT "C"
to
Surface Use Agreement

LEASE AGREEMENT

THIS LEASE AGREEMENT (this "Lease") is made and entered into as of November ___, 1999 ("Effective Date"), by and between **CANYON FUEL COMPANY, L.L.C.** ("Lessor"), and **MILTON AND ARDITH THAYN TRUST** ("Lessee").

Recitals

A. Lessor is the owner of certain lands and water and grazing rights located in Carbon County, Utah, and more particularly described in **Exhibit "A"** attached hereto: (1) lands located in Clark Valley ("Clark Valley Lease Lands"); (2) water rights appurtenant to the Clark Valley Lease Lands ("Clark Valley Water Rights"); (3) state and federal grazing rights related to the Clark Valley Lease Lands ("Grazing Rights"); and (4) water rights represented by 50 shares of water stock in the Wellington Canal Company ("Water Shares"). The Clark Valley Lease Lands, the Clark Valley Water Rights, the Grazing Rights and the Water Shares are collectively referred to as the "Lease Interests."

B. The parties have entered into that certain Surface Use Agreement dated _____ ("Surface Use Agreement") whereby Lessee grants to Lessor rights to use the surface of Lessee's lands to facilitate Lessor's coal mining operations in exchange for this Lease, Lessee desires to lease from Lessor and Lessor and other consideration.

Agreement

NOW, THEREFORE, in consideration of the mutual promises and obligations herein contained, and for other good and valuable consideration, the receipt and sufficiency of which are hereby acknowledged, Lessor hereby leases to Lessee the Lease Interests subject to and conditioned upon the following agreement between the parties:

ARTICLE I
AGREEMENT FOR WATER RIGHTS

1.1 Lessor's Right to Use Clark Valley Water Rights and Water Shares. Lessee shall have the right to use part or all of the Clark Valley Water Rights and the water represented by the Water Shares (collectively, the "Leased Water Rights") for the sole purposes of irrigation or stock watering on or for the benefit of the Clark Valley Lease Lands, or such additional uses

expressly allocated to the Leased Water Rights, upon the condition that Lessee notifies Lessor of its intention to use the Leased Water Rights at least one (1) month prior to the date of use by Lessee. Notwithstanding Lessee's exercise of its right granted hereunder, Lessee shall make beneficial use of the Leased Water Rights during the term of this Lease and shall take all necessary and reasonable actions so as to preserve the validity of the Leased Water Rights and prevent any reversion back to the State of Utah. Lessee's promise to make beneficial use of the Leased Water Rights provides an essential portion of the consideration given by Lessee to cause Lessor to enter into this Lease.

1.2 Interest in Clark Valley Water Rights. Lessor and Lessee expressly acknowledge that the interest of Lessee in the Leased Water Rights is that of a tenant, that Lessee shall acquire no ownership interest in the Leased Water Rights, and that Lessee shall have no right, title, or interest in the Leased Water Rights from and after the termination of this Lease. Lessee shall not in any way, intentionally or otherwise, directly or indirectly, take or encourage others to take any action which is inconsistent with or which will or may jeopardize the interests of Lessor in the Leased Water Rights.

1.3 Change of Diversion or Use. Without the prior written consent of Lessor, Lessee shall not file any change application or exchange application with the Utah State Engineer for purposes of changing the nature, point of diversion or use of the Leased Water Rights.

1.4 Voting Rights. Lessee shall have no right to vote the Water Shares and nothing contained in this Lease shall, nor shall it be interpreted to, grant to Lessee any rights to participate in meeting of the Wellington Canal Company or to act for or on behalf of Lessor as the record title owner of the Shares.

ARTICLE II
AGREEMENT FOR GRAZING RIGHTS

2.1 Conditions. Lessor shall have the right to use the Grazing Rights shall be subject to the following conditions:

(a) Lessee shall comply with all applicable statutes and regulations and the terms and conditions of the Grazing Rights and shall perform all other duties or tasks necessary to preserve the Grazing Rights in good standing and prevent any cancellation or other loss of the Grazing Rights. Lessee shall preserve and protect the interest of the Lessor therein and shall not take any action which is inconsistent with or will jeopardize the interest of Lessor in the Grazing Rights. Lessee shall promptly provide Lessor with a copy of any notice of violation, cancellation, inquiry or rental requirement received by Lessee relating to the Grazing Rights and shall undertake all necessary and reasonable actions to

remedy, cure or otherwise remove the basis for the notice. Lessee shall fully cooperate with Lessor to perform such actions as are necessary and advisable to preserve in full force and effect the Grazing Rights.

(b) Lessor shall remain responsible for and shall pay directly to the BLM and/or State, as appropriate, all fees, rents, costs, or other charges required by statute, regulation, or agreement to keep the Grazing Rights in good standing.

(c) Lessee hereby expressly waives any right or claim that it may have pursuant to 43 C.F.R. Part 4100 as now enacted or as hereinafter amended to receive compensation for any interests lessee may have in authorized range improvements on the Grazing Rights; and Lessee expressly acknowledges that the mutual promises and obligations of Lessor as specified in this Lease shall be deemed to be adequate compensation for any interests that Lessee may have in authorized range improvements on the Grazing Rights.

(d) The general terms and conditions of this Lease shall apply to Lessee's right to use the Grazing Rights and the lands governed thereby as though included within the Clark Valley Lease Lands. Any breach or failure by Lessee to satisfy the covenants or conditions relative to the Grazing Rights shall constitute a breach of this Lease.

2.2 Lessee's Cattle. At all times during the term of this Lease, Lessee shall own a minimum of forty percent (40%) of the cattle actively grazing on or using the Clark Valley Lease Lands. Lessee shall not permit grazing of third party livestock on the Clark Valley Lease Lands that would result in a breach of this provision.

ARTICLE III
GENERAL TERMS AND CONDITIONS

3.1 Term. The term of this Lease shall commence upon the Effective Date and continue for a primary term five (5) years or the equivalent of sixty (60) calendar months. Lessee at its option shall have the right to renew this Lease for three (3) additional extended terms of five (5) years each by giving Lessor written notice of Lessee's election to renew 60-days prior to the termination of the then effective term. Unless otherwise terminated, this Lease shall terminate at the end of the last extended term which termination in no event shall occur later than 20 years after the Effective Date.

3.2 Consideration.

(a) Lessee shall have no obligation to pay any rental to maintain this Lease in full force and effect for the term hereof, the consideration for this Lease being represented by the covenants and obligations set forth in the Surface Use Agreement.

(b) In the event that this Lease is terminated or expires prior to a date twenty (20) years from the Effective Date, Lessor shall pay to Lessee as continuing consideration for the Surface Use Agreement the sum of $5,000 annually ("Rental Payment") in lieu of this Agreement, payable on the anniversary date of the Effective Date each year for twenty (20) years from the Effective Date, or until the Surface Use Agreement terminates as provided therein.

3.3 Use and Occupancy by Lessee. Lessee shall use the Clark Valley Lease Lands, Leased Water Rights the Grazing Rights and the water attributable to the Water Shares exclusively for the grazing of cattle and for the raising of forage for the feeding of livestock. Lessee shall not authorize or conduct mining, drilling operations or hunting on the Clark Valley Lease Lands or remove sand, gravel, dirt, minerals, water, or associated substances from the Clark Valley Lease Lands; shall not commit any waste upon the Clark Valley Lease Lands; and shall not conduct or allow any business, activity, or thing on the Clark Valley Lease Lands which is or becomes unlawful, prohibited, or a nuisance, or which may cause damage to lessor, to occupants of the vicinity, or to other third parties. Lessee shall comply with and abide by all laws, ordinances, and regulations of all municipal, county, state and Federal authorities which are now in force or which may hereinafter become effective with respect to the use and occupancy of the Clark Valley Lease Lands, the Leased Water Rights and the Grazing Rights. Lessee shall conduct operations of the Clark Valley Lease Lands in accordance with good grazing and range or husbandry practices with reference to practices of others in the geographic vicinity of the Clark Valley Lease Lands and in compliance with applicable law. Lessee shall not overgraze the Clark Valley Lease Lands. Lessee shall ensure that all main entrance gates are kept locked with locks provided by Lessor.

3.4 Use by Lessor. Use of the Clark Valley Lease Lands by Lessee shall be nonexclusive. Lessor shall be entitled, without compensation to Lessee, to use the Clark Valley Lease Lands or grant other parties the right to use the Clark Valley Lease Lands, including but not limited to rights for easements, licenses, and leases, but Lessor shall not grant rights for grazing or agricultural use of the Clark Valley Lease Lands to third parties or make use of the Clark Valley Lease Lands itself for such purposes. However, Lessor shall reimburse Lessee for any damages done to Lessee's crops as a result of the use of the Clark Valley Lease Lands by Lessor.

3.5 Improvements. Lessee shall not construct any permanent building on the Clark Valley Lease Lands and shall not construct any temporary building or advertising sign on the Clark Valley Lease Lands without the prior written consent of Lessor. Lessee shall provide

and/or pay for the labor, material, and equipment for any fences, gates, cattle guards, ditches, ponds, reservoirs, or other improvements for Lessee to make use of the Clark Valley Lease Lands, the Grazing Rights, or to make beneficial use of the Leased Water Rights. Unless otherwise agreed in writing, any improvements which Lessee shall make to the Clark Valley Lease Lands shall be made at no expense to Lessor and shall not be removed and shall remain on the Clark Valley Lease Lands upon the termination of this Lease unless otherwise directed by Lessor. Lessee may use whatever fences, gates, cattle guards, ditches, ponds, reservoirs, and other improvements which now exist on the Clark Valley Lease Lands.

3.6 Representation of Lessee. Lessee represents as follows:

(a) Lessee is experienced in farming methods, farm equipment, and irrigation methods generally used in Carbon County Lessee shall cultivate grazing pastures and make beneficial use of the Clark Valley Water Rights and otherwise exercise Lessee's rights and privileges under this Lease.

(b) Lessee has sufficient farming and construction equipment available for its use and shall continue to have such equipment available for its use during the term of this Lease for the construction and maintenance of ditches, roads, ponds, fences, and the performance of other tasks which may be needed to satisfy Lessee's obligations under this Lease.

(c) Lessee has knowledge of the requirements necessary to preserve the Leased Water Rights in good standing and prevent any loss of nonuse or other reversion back to the State of Utah.

3.7 Right of Entry. At any time throughout the term of the Lease, Lessor shall have the right to enter upon the Clark Valley Lease Lands or any portion thereof for purposes of inspecting the same, determining whether Lessee is performing its obligations under the Lease, including but not limited to the obligation to make beneficial use of the Leased Water Rights, taking any action necessary or desirable to remedy any default by lessee in any of Lessee's obligations hereunder, showing or exhibiting the Clark Valley Lease Lands to existing or prospective mortgage lenders, purchasers, or lessees, placing "for sale" or "for lease" signs on the Clark Valley Lease Lands, performing environmental or analytical studies, or for any other purpose whatsoever.

3.8 Insurance. At all times during the term hereof, Lessee shall secure and maintain public liability insurance providing coverage against damage to persons or property resulting from acts or omissions of Lessor or Lessee respecting the Clark Valley Lease Lands, with limits of liability in such amounts as lessor may determine. All insurance required or permitted hereunder shall be written by reputable, responsible companies licensed in the State of Utah and shall name Lessor as insured. Lessor shall be furnished with copies of the insurance policies then

in force pursuant to this section, together with evidence that the premiums therefor have been paid.

3.9 Taxes. Throughout the term hereof Lessor shall pay all real property taxes, assessments, and special assessments, (all of which are hereinafter collectively referred to as "Taxes"), which are levied against or which apply with respect to the Clark Valley Lease Lands, the Grazing Rights or the Water Rights. Lessee shall pay all taxes, assessments, charges and fees which during the term hereof may be imposed, assessed, or levied by any governmental or public authority against or upon Lessee's use of the Clark Valley Lease Lands or any personal property, equipment, or fixtures kept or installed therein by Lessee.

3.10 Assignment and Subletting.

(a) Lessee shall have the right to assign or sublet a portion of this Lease with the prior written consent of Lessor, which consent shall not be unreasonably withheld, provided, however, that such assignment or sublease shall expressly provide and require that Lessee own and maintain a minimum of forty percent (40%) of the cattle actively grazing on or using the Clark Valley Lease Lands (as required under Section 2.2 of this Agreement) and that such assignment or sublease shall automatically terminate if at any time Lessee breaches the covenant under Section 2.2. In the event of any such assignment or sublease with the consent of the Lessor, Lessee shall remain liable on all of its covenants and obligations hereunder unless the instrument whereby Lessor consents to the assignment or subletting contains a provision in which Lessor specifically releases Lessee from such further liability. Any purported assignment without the written consent of the Lessor shall constitute a default hereunder and shall be void and of no effect.

(b) Lessor shall have the right to assign its interests under this Lease without the consent of Lessee. In the event Lessor assigns such interests, Lessor shall, from and after the Effective Date (irrespective of when the assignment occurs) , be relieved of any and all liability or obligation to Lessee hereunder, and all such liability and obligation shall, as of the time of such assignment or on the Effective Date, whichever is later, automatically pass to Lessor's assignee, whether or not specifically assumed by it.

3.11. Default and Remedies. In the event Lessee breaches or fails to perform any of its obligations hereunder and Lessee does not within sixty (60) days, unless a lesser time is required by applicable law for the Grazing Rights, after the giving of written notice by Lessor cure the default or begin action to cure the default and thereafter diligently prosecute such action to completion if the default cannot be reasonably cured withing sixty (60) days, or as required by applicable law, Lessor shall have the right, at its option, to exercise any of the following rights and remedies:

(a) Lessor may itself perform or cause to be performed the obligation with respect to which Lessee is in default. In the event Lessor does so, its cost of such performance, including reasonable attorneys' fees and all expenses incurred by Lessor, plus interest thereon at the rate of eighteen percent (18%) per annum from the date of expenditure, shall be deemed to be additional rent and shall be immediately paid by Lessee.

(b) Lessor may terminate this Lease, immediately enter the Clark Valley Lease Lands, and take possession of the Clark Valley Lease Lands, the Leased Valley Water Rights and the Grazing Rights with or without process of law, and remove all persons and property from the Clark Valley Lease Lands. No such action by Lessor shall be considered or construed to be a forcible entry. By taking such action, Lessor shall incur no liability to Lessee or to any other persons occupying or using the Clark Valley Lease Lands or using the Leased Water Rights or the Grazing Rights for any damage caused or sustained by reason of such entry and removal of persons and property, and Lessee hereby covenants and agrees to indemnify and save harmless Lessor from all costs, loss, or damage arising from or occasioned by such action. In the event Lessor terminates this Lease pursuant to this Subsection (b), it shall also have the right to recover from lessee all other amounts necessary to compensate Lessor for all damages caused by Lessee's default or which would be likely to result from such default.

(c) Lessor may continue this Lease in effect and enforce all of its rights hereunder. If Lessor does so, it shall have the right to relet or sublet the Clark Valley Lease Lands, the Leased Water Rights, and the Grazing Rights or portions thereof, and any such reletting or subletting may be for a term which extends beyond the term of this Lease. Notwithstanding any election by Lessor to proceed under Subsections (a) or (b) above, so long as Lessee remains in default under this Lease, Lessor shall have the right at any time to terminate this Lease pursuant to Subsection (b) above and to exercise the rights therin provided. The remedies specified in this Section 3.11 are cumulative and are not intended to exclude any other remedy or means of redress to which Lessor may be entited in the even of any defalut or threatened default by Lessee with respect to any of its obligations under this Lease.

3.12 Indemnification and Waiver. Lessee shall indemnify and shall hold harmless Lessor and all of Lessor's directors, partners, members, officers, agents, and employees, and each of them, from and against any and all obligations, debts, loss, damage, claims, demands, suits, controversies, costs, fees, liens, encumbrances, and liabilities whatsoever, including attorneys' fees, in any way resulting from or arising out of any failure by Lessee to abide by all of the terms of this Lease or any negligent or intentional act or omission by Lessee or any of its agents, employees, invitees, licensees, or contractors arising out of or in connection and occupancy of the

Clark Valley Lease Lands or use of the Leased Water Rights, or the Grazing Rights. Lessor shall not be responsible or liable for any loss or damage to Lessee or to Lessee's property or business that may be occasioned by or through the acts or omissions of persons occupying, using, or trespassing upon the Clark Valley Lease Lands. Lessee shall use the Clark Valley Lease Lands, the Leased Water Rights and the Grazing Rights at its own risk, and hereby releases Lessor, to the full extent permitted by law, from all claims of every kind or nature, including claims for loss of life, personal or bodily injury, or property damage.

3.13 Enforcement. If any action is brought to recover any rent under this Lease, or because of any breach of or to enforce or interpret any of the provisions of this Lease, or for recovery of possession of the Clark Valley Lease Lands, the party prevailing in such action shall be entitled to recover from the other party reasonable attorney's fees (including those incurred in connection with any appeal), the amount of which shall be fixed by the court and made a part of any judgment rendered.

3.14 Notices. Any notice required or permitted hereunder to be given or transmitted between the parties shall be either personally delivered or mailed, postage prepaid by certified or registered mail, addressed as follows:

TO LESSOR:
President
Ark Land Company
CityPlace One
Suite 300
St. Louis, MO 63141-7056

With a copy to:
Canyon Fuel Company, L.L.C.
Soldier Canyon Mine
P. O. Box 1029
Wellington, UT 84542
Attn: David G. Spillman
(435) 636-2872

TO LESSEE:
Milton and Ardith Thayn Trust
7730 East Highway 6
Price, Utah 84501
Attn: David Thayn
(435) 472-4751

Any notice which is mailed shall be effective on receipt as evidenced by the registration certificate. Either party may, by notice to the other given as prescribed in this Section 3.14, change the above address for any future notices which are mailed under this Lease.

3.15 Liens and Encumbrances. Lessor shall keep the Clark Valley Lease Lands, Leased Water Rights, and Grazing Rights, free of all liens and encumbrances of every nature and kind arising after the Effective Date and shall proceed with all diligence to contest or discharge any lien or encumbrance that is filed or claimed.

3.16 Miscellaneous.

(a) Neither this instrument nor any memorandum or notice concerning the same shall be recorded without the prior written consent of Lessor. Lessor may, at its option and at any time, file this Lease or a notice or short form concerning the same (which said notice or short form Lessee hereby agrees to execute upon Lessor's request) for record in Carbon County, Utah.

(b) The captions which precede the sections of this Lease are for convenience only and shall in no way affect the manner in which any provision hereof is construed.

(c) There are no representations or agreements between the parties except as set forth in this Lease, and this Lease supersedes any and all prior negotiations, agreements, or understandings between Lessor and Lessee in any way related to the subject matter hereof. None of the provisions of this Lease may be altered or modified except through an instrument in writing signed by both parties.

(d) The liability of each person executing and delivering this Lease shall be joint and several. Each provision of this Lease to be performed by Lessee shall be construed to be both a covenant and a condition. To the extent permitted by the provisions hereof, all reservations, terms, conditions, and covenants herein contained shall be binding upon and shall inure to the benefit of the respective heirs, personal representatives, successors, and assigns of the parties hereto.

(e) Time is of the essence to the provisions of this Lease. Any waiver, either express or implied, by Lessor or any breach by Lessee of any promise, condition or term hereof shall not be construed or claimed to be a waiver of any other breach of any condition, promise, or term of this Lease.

(f) Nothing in this Lease shall, nor shall it be interpreted to, amend, modify or waive any provision of the Surface Use Agreement. Except for the express provision to make the Rental Payments under Section 3.2(b), any default under or termination of this Lease shall not affect in any manner the terms, conditions or validity of the Surface Use Agreement, it being the intent and understanding of the parties that the Surface Use Agreement and this Lease shall constitute separate and independent legal agreements, enforceable in accordance with their respective terms.

IN WITNESS WHEREOF the parties hereto have executed this Lease as of the Effective Date.

LESSOR:	LESSEE:
CANYON FUEL COMPANY, L.L.C.	MILTON AND ARDITH THAYN TRUST
By_____	By_____
Its_____	Its Trustee

STATE OF UTAH)
)ss:
COUNTY OF _____)

The foregoing instrument was acknowledged before me this___ day of _____, by _____, who being by me duly sworn did say that he is the _____ of Canyon Fuel Company, L.L.C., and that the foregoing Lease was signed on behalf of said limited liability company.

NOTARY PUBLIC

_____
Residing at:_____

My Commission Expires:
_____

STATE OF UTAH)
)ss:
COUNTY OF CARBON)

The foregoing instrument was acknowledged before me this ___ day of _____, by

_____, the signer of the foregoing Lease, who duly acknowledged to me that he executed the same as Trustee of and for the benefit of the Milton and Ardith Thayn Trust.

NOTARY PUBLIC

_____

Residing at:_____

My Commission Expires:

_____

EXHIBIT "A"
to
Lease Agreement

CLARK VALLEY LEASE LANDS

(approximately 4,461 acres):

Township	Range	Section	Description
14 South	12 East	3	S½SE¼; S½SW¼
"	"	5	S½SE¼
"	"	8	NE¼NE¼;W½NE¼;SW¼;E½NW¼
"	"	9	SE¼
"	"	10	E½;SW¼;E½NW¼;SW¼NW¼
"	"	11	SE¼;NE¼;E½SE¼;SW¼SE¼;W½
"	"	13	W½;SW¼;S½NW¼;NE¼SW¼
"	"	14	All
"	"	15	E½;SW¼;E½NW¼
"	"	17	NW¼;SE¼;E½SW¼;NW¼SW¼
"	"	18	E½NE¼
"	"	20	N½NE¼
"	"	21	NE¼NW¼;W½NW¼;SE¼NE¼
"	"	22	NW¼

CLARK VALLEY WATER RIGHTS

Water Right No. (Irrigation & Stockwatering)	Water Right No. (Stockwatering)	
91-23	91-410	91-447
91-85	91-411	91-448
91-86	91-412	91-449
91-409	91-413	91-450
91-457	91-414	91-451

Exhibit A
to Lease Agreement

Water Right No. (Irrigation & Stockwatering)	Water Right No. (Stockwatering)	
91-491	91-415	91-452
91-492	91-416	91-453
91-493	91-417	91-456
91-494	91-418	91-458
91-495	91-419	91-459
91-604	91-420	91-460
91-605	91-421	91-461
91-606	91-422	91-465
91-607	91-426	91-466
	91-427	91-467
	91-428	91-468
	91-429	91-469
	91-430	91-470
	91-443	91-591
	91-444	91-3729
	91-445	91-3730
	91-446	

GRAZING RIGHTS

BLM Grazing Allotment #4079 (North Clark Valley) Approx. (Acreage 9,480)
Period of Use - March 20th-June 5th

State Grazing Permit #22966 (Replacing Permit #21722) (Approx. Acreage 680)

WATER SHARES

50 Shares of water stock in The Wellington Canal Company from Certificate No. 881

Canyon Fuel Company LLC
6955 Union Park Center, Suite 540
Midvale, Utah 84047

RE: Soldier Canyon Mine
Dugout Canyon Mine

Gentlemen:

The Milton and Ardith Thayn Trust ("Trust") is the record title owner of the surface to the lands described below that cover or otherwise relate to coal leases Canyon Fuel Company now or in the future intends to develop ("Lands"):

T13S, R12 E. Salt Lake Meridian, Utah
Sec. 12: E/2 SE/4;
Sec. 13: E/2; SE/4 NW/4; E2 SW/4; NW/4 SW/4;
Sec. 24: All;
Sec. 25: NW/4.

T13S, R13 E, Salt Lake Meridian, Utah
Sec. 7: S/2SW/4, NW/4SW/4;
Sec. 18: S/2, NW/4, S/2NE/4, NW/4NE/4;
Sec. 17: SW/4, S/2SE/4, NW/4SE/4;
Sec. 19: All Except Lot 4;
Sec. 20: All;
Sec. 21: S/2, S/2N/2, NW/4NW/4;
Sec. 22: SW/4, S/2NW/4;
Sec. 27: W/2;
Sec. 28: All;
Sec. 29: All;
Sec. 30: All Except Lots 1 and 2;
Sec. 33: N/2N/2.

Subject to the Surface Use Agreement dated effective November 22, 1999, between the parties, the Trust hereby consents to Canyon Fuel's underground mining activities below the Lands and access to the surface to repair subsidence.

Very truly yours,

Milton and Ardith Thayn Trust

By: Milton Thayn

FIRST AMENDMENT TO SURFACE USE AGREEMENT

THIS FIRST AMENDMENT TO SURFACE USE AGREEMENT ("Amendment"), dated effective as of _13_ August, 2001, is by and between **Canyon Fuel Company, L.L.C.** ("CFC") and **Milton and Ardith Thayn Trust** ("Thayn").

Recitals

A. The parties have entered into that certain Surface Use Agreement dated as of November 22, 1999, between CFC and Thayn ("Surface Use Agreement"). All capitalized terms used in this Amendment, unless otherwise defined herein, shall have the meanings assigned to them in the Surface Use Agreement

B. The parties now desire to amend the Surface Use Agreement consistent with the terms of this Amendment.

Amendment

NOW, THEREFORE, for good and valuable consideration, the parties agree as follows:

1. The Surface Use Agreement is amended by addition of the following provisions:

a. Water Purchases. CFC may, at its option any time during the term of the Surface Use Agreement, purchase water from Thayn, for which Thayn holds beneficial use rights or otherwise controls, to conduct any of the activities permitted by the Surface Use Agreement on the Thayn Lands. CFC and Thayn will cooperate to make necessary filings with the Utah State Engineer to facilitate such water uses. The purchase price for the water is $ .0125/ gallon and will be adjusted as provided in subparagraph (d) below. Thayn may determine at its discretion when water is available for purchase by CFC and CFC will be responsible for all costs and expenses to deliver the water to the location of usage. The purchase price for the water shall have no bearing on future determinations of the value of the Thayn water rights or water used on the Thayn Lands.

b. Interference with Hunting Activities.

(i) CFC will reimburse Thayn in an amount not to exceed $10,000 annually for the loss of any revenue incurred by Thayn as a result of interference with, or the inability to conduct, deer and elk hunting and guide services on the Thayn Lands by Thayns' outfitters due to exploration or production drilling conducted by or on behalf of CFC on the Thayn Lands. For purposes of this provision, the deer hunting season includes the muzzle load, archery and rifle hunts. Thayn will provide CFC with a written claim for lost revenue describing the basis for the claim no later than 30 days after the end of a hunting season. The parties agree that the actual presence and ongoing operation of a drilling rig on the Thayn Lands during the elk or the deer hunting seasons will automatically constitute interference with hunting activities. In such event, upon written notice from Thayn, Arch will pay to Thayn $3750 for the deer hunt season and $3750 for the elk hunt season respectively impacted by the presence and operation of a drilling rig. Arch's maximum liability under this provision for each hunting season shall not

exceed $5,000 for the elk hunt and $5,000 for the deer hunt. The reimbursement payment will be readjusted as provided in subparagraph (d) below. Thayn acknowledges that the payment provided represents fair and reasonable compensation and Thayn waives any and all other claims against CFC for alleged damages arising out of interference with deer and elk hunting and guide services on the Thayn Lands.

(ii) CFC and Thayn have jointly established a 100-yard non-hunting buffer zone surrounding any drilling rig or active drilling operations. Thayn will inform hunters on the Thayn Lands of actual drilling locations and operations in an effort to create a safe operations buffer zone. CFC will prohibit its employees and employees of its contractors from carrying firearms, including muzzle loaders, archery equipment and rifles during the hunting seasons. Only road use necessary to conduct Arch's operations and activities under the Surface Use Agreement will be allowed during the elk and deer hunting seasons on the Thayn Lands in an effort to maintain a quality hunting environment.

c. Rezoning. Thayn will support and not oppose any rezoning of the Thayn Lands that is required by or results from mining or oil and gas operations conducted on the Thayn Lands, provided, however, that CFC will reimburse Thayn for all additional taxes, or other costs and expenses, incurred by Thayn as a result of such rezoning.

d. Adjustments to Payments.

(i) The purchase price for the water described in subparagraph (a) will be adjusted for inflation on the fifth annual anniversary date after the Effective Date, and every five years thereafter on the anniversary of the Effective Date based on the cumulative changes in the Consumer Price Index (CPI), or other generally-recognized economic pricing index, for the preceding five-year period.

(ii) The reimbursement payment described in subparagraph (b) will be adjusted for inflation on the fourth annual anniversary date after the Effective Date, and every four years thereafter on the anniversary of the Effective Date based on the then current fee arrangement with Thayn or on a written bona fide offer from a hunting outfitter who, if required by state law, is licensed. Allocation of the reimbursement payment between the deer and elk hunts shall be based on the terms of the offer.

(iii) The proposed adjustment shall be calculated by CFC and communicated to Thayn in writing within thirty (30) days after the applicable anniversary date. All adjustments shall be effective as of the then applicable anniversary date and shall otherwise apply prospectively and shall not apply to payments previously made under this Amendment.

2. Except as expressly provided in this Amendment, nothing herein shall, nor be interpreted to, amend, modify or waive any provision of the Surface Use Agreement. The parties acknowledge that the Surface Use Agreement is in full force and effect and currently in good standing. This Amendment may be executed in counterparts by the parties.

Executed and dated as of the Effective Date.

Canyon Fuel Company, L.L.C.

By:_____
Its:_____

Milton and Ardith Thayn Trust

By: George M Thayn

SECOND AMENDMENT TO SURFACE USE AGREEMENT

THIS SECOND AMENDMENT TO SURFACE USE AGREEMENT ("Second Amendment"), dated effective as of September 1, 2004 ("Effective Date"), is by and between **Ark Land Company**, ("Ark Land"), whose mailing address is One CityPlace Drive, Suite 300, St. Louis, MO 63141, and **Milton and Ardith Thayn Trust** ("Thayn"), whose mailing address is 7730 East Hwy 6, Price, Utah 84501.

Recitals

A. Canyon Fuel Company, L.L.C. ("CFC"), an affiliate of Ark Land, and Thayn entered into a Surface Use Agreement dated as of November 22, 1999 ("Agreement"). The Agreement was amended by a First Amendment to Surface Use Agreement dated effective as of August 13 2001. All capitalized terms used in this Second Amendment, unless otherwise defined herein, shall have the meanings assigned to them in the Agreement, as amended.

B. By Assignment dated as of the Effective Date, CFC assigned to Ark Land all right, title and interest in, to and under the Agreement.

C. The parties now desire to amend the Agreement consistent with and as set forth in this Second Amendment.

Amendment

NOW, THEREFORE, for and in consideration of Ten Dollars and other good and valuable consideration, the receipt and adequacy of which are hereby acknowledged, the parties agree as follows:

1. The Agreement is hereby amended by adding the following provisions:

a. Vent Fan Easement.

(i) In addition to the surface use grant in favor of Ark Land under Section 2 of the Agreement, Thayn hereby grants to Ark Land an exclusive easement on, over, across, under and through the Thayn Lands, as more specifically described on the plat map attached hereto as Exhibit A ("Easement"), for access to construct, maintain, utilize, repair and reclaim a mine vent fan and all surface structures related to a mine vent fan and an associated air intake (collectively "Vent Fan") to be located on lands adjacent to the Thayn Lands and for access to provide water, power and communication facilities to, in association with and for the benefit of the Vent Fan ("Vent Fan Facilities"). Third Parties providing services for Vent Fan Facilities shall have the non-exclusive right to use the Easement under the same terms and conditions as Ark Land's designation. The Easement shall have a term that runs concurrent with the term of the Agreement, provided, however, that upon termination of the Agreement, Ark Land, at its sole option, may elect to extend the term of the Easement for an additional five (5) year period upon 30-days prior written notice to Thayn. In such event, Thayn shall execute an independent instrument susceptible to recording in the records of the Carbon County Recorder evidencing the Easement under the extended term.

(ii) Upon execution of this Second Amendment, and thereafter on or before the anniversary of the Effective Date hereof and so long as the Easement remains in effect, Ark Land shall pay to Thayn the sum of Thirty Thousand Dollars ($30,000) ("Easement Payment"). Thayn acknowledges that the Easement Payment represents full and fair compensation for the grant of the Easement, placement of the Vent Fan adjacent to the Thayn Lands, and placement of the Vent Fan Facilities on, over, across, under or through the Easement. Thayn disclaims and hereby waives any and all further claims and causes of action for compensation or damages arising out of or relating to use of the Easement and the placement, use, operation, repair and reclamation of the Vent Fan and the Vent Fan Facilities, including, without limitation, claims based on alleged noise, visual or environmental pollution or nuisance. In particular, without limitation, the placement, use, operation, repair and reclamation of the Vent Fan and the Vent Fan Facilities shall not constitute the basis for any claim for interference with the use and enjoyment of the Thayn Lands including hunting activities described in the First Amendment.

(iii) Thayn hereby concurs with, joins in and ratifies, and shall provide such further assurances as necessary for, any and all permits and authorizations necessary or required by applicable regulatory authority to permit the construction, repair, use and reclamation of the Vent Fan and Vent Fan Facilities. Thayn shall not oppose any permit, application or plan involving the Vent Fan or Vent Fan Facilities.

2. Thayn consents to the assignment from CFC to Ark Land and fully recognizes Ark Land as the legal successor to CFC under the Agreement. Thayn represents that the Agreement is in full force and effect and in good standing, is not subject to any defaults or activities or events of which Thayn is aware which could result in a default, and that all payments due under the Agreement have been timely and properly made.

3. Except as expressly provided in this Second Amendment, nothing herein shall, nor shall it be interpreted to, amend, modify or waive any provision of the Agreement.

4. This Second Amendment may be executed in counterparts by the parties.

Executed and dated as of the Effective Date.

ARK LAND COMPANY

By: [signature]
Its: Vice Pres

MILTON AND ARDITH THAYN TRUST

By: Milton Thayn
Name: Milton and Ardith Thayn Trust

4847-0460-8256\1

STATE OF Missouri)
)ss.
COUNTY OF St Louis)

The foregoing instrument was acknowledged before me by Douglas Downing the Vice President of Ark Land Company.

Notary Public Notary Seal State of Missouri

MARY C. HAMILTON
St. Louis City
My Commission Expires
September 14, 2007

Mary C. Hamilton
Notary Public

STATE OF Utah)
)ss.
COUNTY OF Carbon)

The foregoing instrument was acknowledged before me by Milton Thayn as Representative of the Milton and Ardith Thayn Trust.

BARBARA J. ROBINETT
NOTARY PUBLIC • STATE of UTAH
161 WHITMORE
E. CARBON, UTAH 84520
COMM. EXP. 12-12-2005

Barbara J. Robinett
Notary Public

4847-0460-8256\1

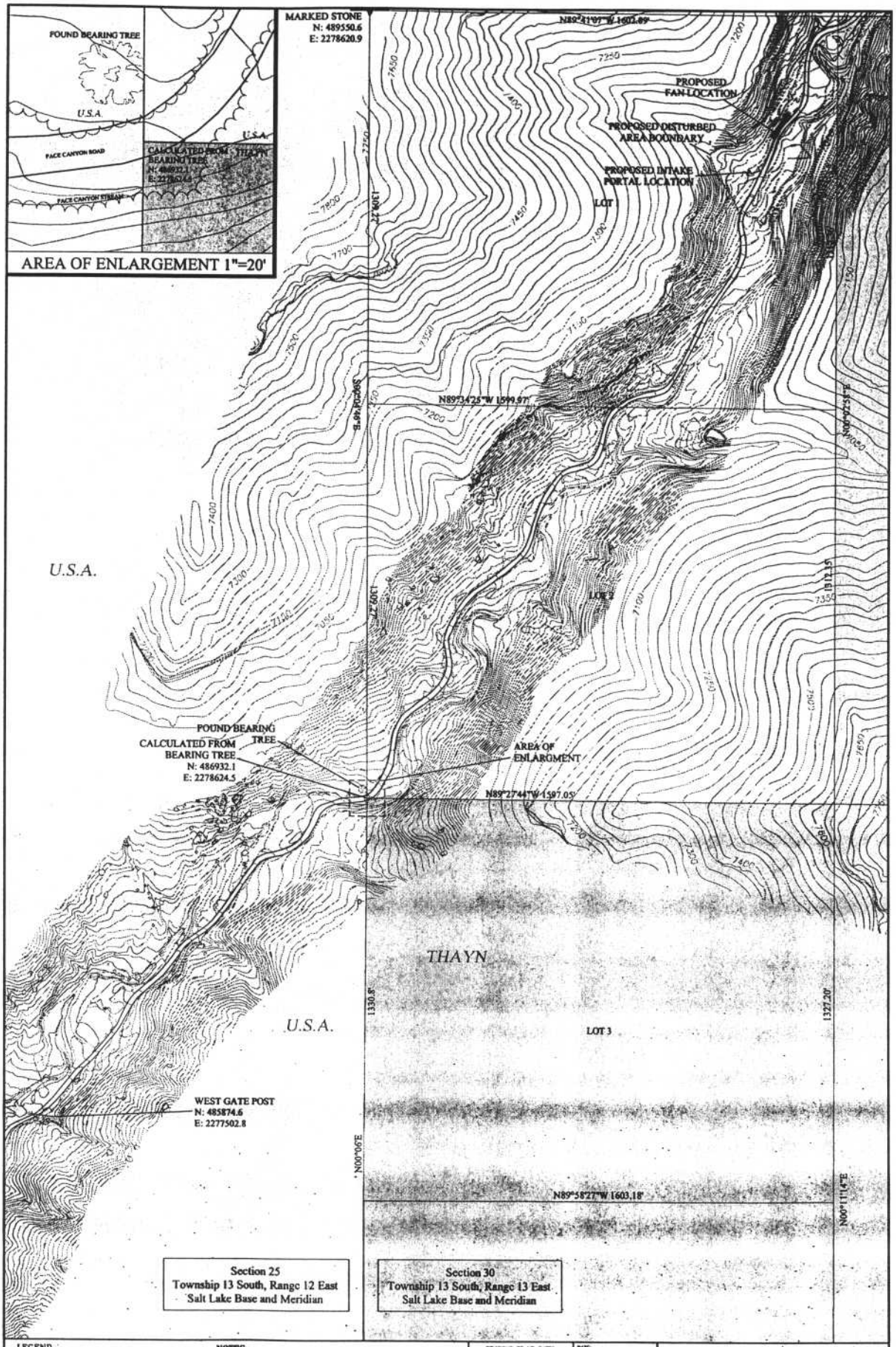

LEGEND

- U.S.A. — UNITED STATES OF AMERICA
- THAYN — MILTON AND ARDITH THAYN TRUST
- FOUND MONUMENT
- SEARCHED FOR & NOT FOUND
- NO SEARCH MADE

NOTES:

SURVEYING COMPLETED BY WARE SURVEYING & ENGINEERING, LLC.

DISTANCES & BEARINGS SHOWN ARE CALCULATED FROM B.L.M. NOTES AND HAVE BEEN ROTATED 6° CLOCKWISE BASED ON THE BEARING BETWEEN THE NORTHWEST CORNER OF SECTION 19 AND THE NORTHWEST CORNER OF SECTION 30, T. 13 S., R. 13 E., S.L.B.&M.

COORDINATES SHOWN ARE NAD 1927, ADJUSTED TO GROUND. C.A.F. = 1.00063362

REVISIONS OR UP-DATES		
NO.	DATE	BY

DATE:	11/03/04
DESIGNED BY:	-
DRAWN BY:	JKS
CHECKED BY:	DS
SCALE:	1"=150'

FILENAME: K:\Survey\Thayn\Exhibit A.Dwg

Canyon Fuel Company, LLC
Dugout Canyon Mine

EXHIBIT A
SECOND AMENDMENT TO SURFACE USE AGREEMENT

P.O BOX 1029
WELLINGTON, UTAH 84542

DRAWING OR MAP NUMBER: EXHIBIT A.DWG

APPENDIX 4-3

Cultural and Historical Studies

SITLA Lease and Adjacent Area

~~**INFORMATION IN APPENDIX 4-3 SHOULD BE PLACED IN A CONFIDENTIAL LOCATION**~~

REFERENCE CONFIDENTIAL FOLDER PER REQUEST UNDER TASK ID # 1915

PULL ORIGINALS

FROM

JANUARY 4, 2005

SUBMITTAL

CHAPTER 5

ENGINEERING

TABLE OF CONTENTS

Section — Page

510 INTRODUCTION 5-1

511 General Requirements 5-1

512 Certification 5-1

512.100 Cross Sections and Maps 5-2

Previously Mined Areas 5-2
Surface Facilities 5-2
Surface Configurations 5-3
Hydrology 5-3
Geology 5-4

512.200 Plans and Engineering Designs 5-4

Excess Spoil 5-4
Durable Rock Fills 5-4
Coal Mine Waste 5-4
Impoundments 5-4
Primary Roads 5-4
Variance from Approximate Original Contour 5-4

513 Compliance with MSHA Regulations and MSHA Approvals 5-5

513.100 Coal Processing Waste Dams and Embankments 5-5
513.200 Impoundments and Sedimentation Ponds 5-5
513.300 Underground Development Waste, Coal Processing Waste, and Excess Spoil 5-5
513.400 Refuse Piles 5-5
513.500 Underground Openings to the Surface 5-6
513.600 Discharge to Underground Mines 5-6
513.700 Surface Coal Mining and Reclamation Activities 5-6
513.800 Coal Mine Waste Fires 5-6

514 Inspections 5-7

514.100 Excess Spoil 5-7
514.200 Refuse Piles 5-7

TABLE OF CONTENTS (Continued)

Section — Page

514.300 Impoundments 5-7

515 Reporting and Emergency Procedures 5-9

515.100 Slides 5-9
515.200 Impoundment Hazards 5-9
515.300 Temporary Cessation of Operations 5-9

520 OPERATION PLAN 5-10

521 General 5-10

521.100 Cross Sections and Maps 5-10

Previously Mined Areas 5-10
Existing Surface and Subsurface Facilities and Features 5-12
Landowner, Right of Entry, and Public Interest 5-14
Mining Sequence and Planned Subsidence 5-14
Land Surface Configuration 5-15
Surface Facilities 5-15
Transportation Facilities 5-17
Other Relevant Information 5-17

521.200 Signs and Markers 5-17

Mine and Permit Identification Signs 5-17
Perimeter Markers 5-21
Buffer Zone Markers 5-21
Topsoil Markers 5-21

522 Coal Recovery 5-22

523 Mining Methods 5-23

Continuous Miner Operations 5-23
Longwall Mining 5-24
Anticipated Production 5-24
Major Equipment 5-25

524 Blasting and Explosives 5-25

525 Subsidence 5-27

TABLE OF CONTENTS (Continued)

Section | Page

525.100 Subsidence Control Plan 5-27

Structures and Renewable Resource Lands 5-27
Mining Methods 5-27
Physical Conditions Affecting Subsidence 5-27
Subsidence Control Measures 5-28
Subsidence Monitoring 5-28
Anticipated Effects of Subsidence 5-31

525.200 Subsidence Control 5-32

Adopted Control Measures 5-32
Compliance With Control Plan 5-32
Correction of Material Damage 5-32
Protection of Significant Surface Resources 5-33

525.300 Public Notice of Proposed Mining 5-33

526 Mine Facilities 5-34

526.100 Mine Structures and Facilities 5-34
526.200 Utility Installation and Support Facilities 5-37

Utility Installations 5-37
Support Facilities 5-37
Water Pollution Control Facilities 5-38

527 Transportation Facilities 5-38

527.100 Road Classification 5-38
527.200 Description of Transportation Facilities 5-39

Road Specifications 5-39
Drainageway Alterations 5-41
Road Maintenance 5-45

528 Handling and Disposal of Coal, Excess Spoil, and Coal Mine Waste 5-45

TABLE OF CONTENTS (Continued)

Section | Page

528.100 Coal Handling and Transportation 5-45
528.200 Overburden 5-47
528.300 Spoil, Coal Processing Waste, Non-Coal Waste, and Mine Development Waste 5-47

Excess Spoil 5-47
Coal Processing Waste 5-47
Burning and Burned Waste Utilization 5-47
Non-coal Mine Waste 5-47
Underground Development Waste 5-48
Minimization of Acid, Toxic and Fire Hazards 5-49

528.400 Dams, Embankments, and Impoundments 5-50

529 Management of Mine Openings 5-50

530 OPERATIONAL DESIGN CRITERIA AND PLANS 5-51

531 General 5-51

532 Sediment Control 5-51

533 Impoundments 5-52

533.100 Slope Stability 5-52
533.200 Foundation Considerations 5-52
533.300 Slope Protection 5-53
533.400 Embankment Faces 5-53
533.500 Highwalls 5-53
533.600 MSHA Criteria 5-54
533.700 Pond Operation and Maintenance Plans 5-54

534 Roads 5-54

534.100 Location, Design, Construction, Reconstruction, Use, Maintenance, and Reclamation 5-54

Control of Damage to Public or Private Property 5-54
Road Surfacing 5-54

TABLE OF CONTENTS (Continued)

Section | Page

Slope Stability 5-54

534.200 Environmental Protection and Safety 5-55
534.300 Primary Roads 5-56

General 5-56
Road Alignment 5-56
Road Surfacing 5-57
Road Maintenance 5-57
Road Culverts 5-57

535 Spoil 5-57

536 Coal Mine Waste 5-57

536.100 Design 5-58
536.200 Waste Emplacement 5-58
536.300 Excess Spoil Fills 5-59
536.400 Impounding Structures Constructed of Coal Mine Waste 5-59
536.500 Disposal of Coal Mine Waste in Special Areas 5-59
536.600 Underground Development Waste 5-60
536.700 Coal Processing Waste 5-61
536.800 Coal Processing Waste Banks, Dams, and Embankments 5-61
536.900 Refuse Piles 5-61

537 Regraded Slopes 5-62

537.100 Division Approval 5-62
537.200 Regrading of Settled and Revegetated Fills 5-63

540 RECLAMATION PLAN 5-63

541 General 5-63

541.100 Commitment 5-63
541.200 Surface Coal Mining and Reclamation Activities 5-64
541.300 Underground Coal Mining and Reclamation Activities 5-64
541.400 Environmental Protection Performance Standards 5-64

TABLE OF CONTENTS (Continued)

Section — Page

542 Narratives, Maps, and Plans 5-64

542.100 Reclamation Timetable 5-64
542.200 Plan for Backfilling, Soil Stabilization, Compacting, and Grading 5-64

Building Demolition 5-66
Backfilling and Compaction 5-67
Construction of Reclamation Channels 5-67
Sedimentation Pond Removal and Interim Sediment Control 5-68

542.300 Final Surface Configuration Maps and Cross Sections 5-70
542.400 Removal of Temporary Structures 5-70
542.500 Removal of Sedimentation Pond 5-71
542.600 Roads 5-71
542.700 Final Abandonment of Mine Openings and Disposal Areas 5-72

Abandonment of Openings 5-72
Disposal of Excess Spoil 5-72
Disposal of Coal Mine Waste 5-73
Disposal of Non-Coal Mine Wastes 5-73

542.800 Estimated Cost of Reclamation 5-73

550 RECLAMATION DESIGN CRITERIA AND PLANS 5-73

551 Casing and Sealing of Underground Openings 5-73

552 Permanent Features 5-74

552.100 Small Depressions 5-74
552.200 Permanent Impoundments 5-74

553 Backfilling and Grading 5-74

553.100 Disturbed Area Backfilling and Grading 5-75

TABLE OF CONTENTS (Continued)

Section | Page

Approximate Original Contour 5-75
Elimination of Highwalls, Spoil Piles and Depressions 5-75
Slope Stability 5-75
Erosion and Water Pollution 5-75
Post-Mining Land Use 5-76

553.200 Spoil and Waste 5-76

Spoil 5-76
Refuse Piles 5-76
Coal Processing Waste 5-76

553.300 Exposed Coal Seams, Acid- and Toxic-Forming Materials, and Combustible Materials 5-77

Exposed Coal Seams 5-77
Acid-and Toxic-Forming Materials 5-77
Combustible Materials 5-77

553.400 Cut-and-Fill Terraces 5-77
553.500 Highwalls From Previously Mined Areas 5-77
553.600 Previously Mined Areas 5-77
553.700 Backfilling and Grading - Thin Overburden 5-78
553.800 Backfilling and Grading - Thick Overburden 5-78
553.900 Regrading of Settled and Revegetated Fills 5-78

560 PERFORMANCE STANDARDS 5-79

REFERENCES 5-80

LIST OF TABLES

Table

5-1 List of Major Equipment . . . . . Tab

5-2 Subsidence Control Point Survey Data . . . . . Tab

5-3 Mine Road Specifications . . . . . Tab

LIST OF FIGURES

Figure

5-1 Typical Road Cross Sections . . . . . Tab

5-2 Material Flow Diagram . . . . . Tab

5-3 Reclamation Timetable . . . . . Tab

5-4 Silt Fence and Straw-Bale Dike Schematics . . . . . Tab

PC-1 Typical Cross-Section of the Realigned Road, Pace Canyon Fan . . . . . Appendix 5-10

PC-2 Gilson Seam Mine Workings . . . . . Appendix 5-10

PC-3 Fence Location . . . . . Appendix 5-10

LIST OF PLATES

Plate

5-1 Previously Mined Areas

5-2 Surface Facilities

5-3 Surface Facilities Cross Sections

5-4 Existing Surface Topography

5-5 Reclamation Surface Topography

5-6 Reclamation Cross Sections

5-7 Proposed Mine Sequence and Planned Subsidence Boundary

The following plates are located in Appendix 5-10

PC 5-2 Pace Canyon Fan Surface Facilities and Cross-Sections
PC 5-4 Pace Canyon Fan Existing Surface Topography
PC 5-5 Pace Canyon Fan Reclamation Topography and Cross-Sections
PC 5-6 Pace Canyon Fan Reclamation Treatment Map

LIST OF APPENDICES

Appendix

5-1 **DELETED IN MAY 1999 REVISION**

5-2 Approvals for Waste-Rock Disposal

5-3 Carbon County Waste Disposal Agreement

5-3A Dugout Canyon Mine Wastewater Disposal Approval

5-4 Slope Stability Analyses

5-5 Cut and Fill Calculations

5-6 Reclamation Bond Estimate

5-7 Waste-Rock Analyses

LIST OF APPENDICES (Continued)

Appendix

5-8 Dugout Canyon Mine Blasting Plan

5-9 Sewer Pipeline Blasting Plan

5-10 Pace Canyon Fan Facilities

CHAPTER 5
ENGINEERING

510 INTRODUCTION

This chapter provides a discussion of general engineering aspects, an operation plan, a reclamation plan, design criteria, and performance standards related to the Dugout Canyon Mine. The proposed coal mining and reclamation activities associated with the mine have been or will be designed, located, constructed, maintained, and reclaimed in accordance with the operation and reclamation plans.

Additional information can be found in the following amendments: Methane Degassification Amendment (August 2003), Refuse Pile Amendment (February 2003), and the Leachfield Addendum A-1 (March 2001). The remainder of the State Lease ML-48435-OBA (SITLA Lease) was incorporated into the Dugout Canyon Mine permit area in 2005.

511 General Requirements

This permit application includes descriptions of the proposed coal mining and reclamation operations together with the appropriate maps, plans, and cross sections. Potential environmental impacts as well as methods and calculations utilized to achieve compliance with the design criteria are also presented.

512 Certification

Where required by the regulations, cross sections and maps in this permit application have been prepared by or under the direction of, and certified by, qualified registered professional engineers or land surveyors. As appropriate, these persons were assisted by experts in the fields of hydrology, geology, biology, etc.

512.100 Cross Sections and Maps

Previously Mined Areas. A certified map showing the location of previously mined areas within the permit and adjacent areas is provided as Plate 5-1. Plate PC5-4 in Appendix 5-10 shows the portal location for an abandoned mine in the vicinity of the Pace Canyon Fan Portal Site.

Surface Facilities. Underground development waste which is generated at the Dugout Canyon Mine will be disposed of either:

- Underground within the Dugout Canyon Mine (without bringing this waste to the surface), at the approved waste-rock disposal facility at the Dugout Canyon Mine;
- At the approved waste-rock disposal facility at the SUFCo Mine (a sister operation of SCM); or
- At the approved waste-rock disposal facility at the Skyline Mine (also a sister operation of SCM).

Copies of the Division correspondence approving the SUFCo and Skyline waste-rock disposal facilities for receipt of Dugout Canyon waste rock are provided in Appendix 5-2.

Certified maps and cross sections concerning the disposal of underground development waste at the SUFCo and Skyline Mines are provided in the respective Mining and Reclamation Plans (M&RPs) for those mines. A certified map showing the proposed location of coal storage and loading areas, and explosive storage and handling facilities, is provided as Plate 5-2. Cross sections of the proposed facilities area are provided on Plate 5-3.

A map of the existing topography prior to disturbance by SCM is provided as Plate 5-4. Also noted on Plate 5-4 is the area of disturbance which was mapped to exist at the site in 1980. Since mining ceased at the site in 1964 (as noted in section 521.100 of this M&RP), this boundary represents the

area of pre-SMCRA disturbance. Plate 5-4 also shows areas of non-mining disturbance which occurred after 1980 but prior to 1996. These disturbances were created by logging activities in the area and are not subject to the requirements of R645-301 through R645-302. No areas shown on Plate 5-4 are subject to the requirements of R645-200 through R645-203. The pre-mining topography for the Pace Canyon Fan Portal Site can be seen on Plate PC5-4 in Appendix 5-10.

A certified map showing the location of the topsoil stockpile is provided as Plate 2-3. The location of the proposed topsoil stockpile for the Pace Canyon Fan Portal Site is shown on Plate PC5-2 in Appendix 5-10. The proposed location of a sediment trap is also shown on this plate.

The proposed location of the sedimentation pond is noted on Plate 5-2. No water treatment facilities will exist at the site other than the sedimentation pond.

The following facilities or activities will not exist or occur within the permit area:

- Coal preparation plant,
- Coal cleaning,
- Coal processing waste banks, dams, or embankments,
- Disposal of non-coal (non-waste rock) waste other than durable rock-type construction materials such as cinder block, and
- Air pollution control facilities.

Hence, certified maps or cross sections of these facilities are not provided in this plan. The durable rock-type construction materials will be disposed of in locations designated to receive underground development waste.

Surface Configurations. Certified maps and cross sections showing the proposed final (post-reclamation) surface configuration of the Dugout Canyon disturbed area are provided on Plates 5-5

and 5-6, respectively. Certified maps and cross sections showing the proposed final (post-reclamation) surface for the Pace Canyon Fan Portal Site is shown on Plate PC5-5 in Appendix 5-10.

Hydrology. Certified maps and cross sections associated with the hydrology of the Dugout Canyon Mine area are provided in Chapter 7.

Geology. Certified maps and cross sections associated with the geology of the Dugout Canyon Mine area are provided in Chapter 6.

512.200 Plans and Engineering Designs

All plans and engineering designs presented in this M&RP were prepared by or under the direction of and certified by a qualified registered professional engineer.

Excess Spoil. No excess spoil will be generated from the permit area.

Durable Rock Fills. No durable rock fills will exist in the permit area.

Coal Mine Waste. The designs of the waste-rock facilities at the Dugout, SUFCo and Skyline Mines were certified by a qualified registered professional engineer. Information regarding these disposal facilities can be found in their respective M&RPs.

Impoundments. An impoundment was constructed for the mining and reclamation operation in Dugout Canyon and consists of a sedimentation pond (see Plate 7-5). A sediment trap has been proposed for the Pace Canyon Fan Portal Site (see Plate PC7-5 in Appendix 7-12). These impoundments have been designed under the direction of a professional engineer using current, prudent, engineering practices. These designs were certified by a qualified registered professional engineer.

Primary Roads. The design and construction of the primary road associated with the mine has been certified by a professional engineer as meeting the requirements of R645-301-534.200 and R645-301-742.420. This certification is presented in Figure 5-1.

Variance From Approximate Original Contour. No variance from the approximate original contour requirements of the regulations is being requested in this M&RP.

513 Compliance with MSHA Regulations and MSHA Approvals

513.100 Coal Processing Waste Dams and Embankments

No coal processing waste dams or embankments will exist within the permit area.

513.200 Impoundments and Sedimentation Ponds

No impoundments or sedimentation ponds in the permit area will meet the size criteria of 30 CFR 77.216(a).

513.300 Underground Development Waste, Coal Processing Waste, and Excess Spoil

No coal processing waste or excess spoil will be generated within the permit area. Disposal of underground development waste in underground mine workings is described in Section 536.500 of this M&RP.

513.400 Refuse Piles

Waste rock generated from the Dugout Canyon Mine may be temporarily stored on the surface of the mine site at the location shown on Plate 5-2. This storage will be for a short period of time prior to disposal . Refer to the "Refuse Pile Amendment, February 2003 for information pertaining to the

Dugout Mine refuse pile. High-ash coal product may also be produced during mine construction and development. This material may also be transferred to Sunnyside Cogeneration Associates (ACT/007/035) or a similar permitted facility. Runoff from the surface-stored materials will drain to the site sedimentation pond or other appropriate sediment-control structures.

A representative sample will be collected of the waste rock removed from the mine at a rate designated in the Refuse Pile Amendment, Section 536. These samples will be analyzed in accordance with Table 6 of the Division's topsoil and overburden guidelines (Leatherwood and Duce, 1988). Waste rock with acid- and toxic-forming characteristics will be handled in accordance with the permits associated with the disposal locations.

Small quantities of coal mined during the life of the Snow Mine lies in two surface locations (Plate PC5-4) within the Pace Canyon Fan Portal disturbed area. The coal from the two areas will be collected and disposed of at the Dugout waste rock site. A sample will be collected from each location and analyzed in accordance with Table 6 of the Division's topsoil and overburden guidelines (Leatherwood and Duce, 1988). Coal from the site with acid- and toxic-forming characteristics will be handled in accordance with the permits associated with the Dugout waste rock site.

513.500 Underground Openings to the Surface

Upon abandonment, each opening to the surface from the underground will be capped, sealed, backfilled, or otherwise properly managed in accordance with 30 CFR 75.1771. Details regarding final abandonment of mine openings are provided in Section 542.700.

513.600 Discharges to Underground Mines

Water not meeting UPDES standards during sediment pond cleaning will be pumped into the sealed, abandoned "Gilson West - Old Workings".

513.700 Surface Coal Mining and Reclamation Activities

No surface coal mining and reclamation activities will occur in the permit area.

513.800 Coal Mine Waste Fires

If any coal mine waste fires occur within the permit area, these will be reported immediately to MSHA and the Division. Immediate remedial action will be taken as deemed necessary by SCM to protect public health and safety as well as the environment. Following initial remedial efforts, a long-term plan will be formulated in discussion with MSHA and the Division to extinguish any existing fires and prevent future fires.

SCM will utilize a program of prevention and suppression to minimize the potential for coal mine waste fires. An ongoing educational program will emphasize the need for attention to fire prevention. Prevention will be further enhanced by the short-term nature of the surface storage of both coal and waste rock at the Dugout Canyon Mine. Suppression will occur by separating smoldering material and compacting the adjacent material (to minimize oxygen content in the adjacent material). The burning material will then be extinguished using appropriate methods (see Section 528.300 of this M&RP). No burning mine waste will be removed from the temporary storage area without a removal plan approved by the Division.

514 Inspections

514.100 Excess Spoil

Excess spoil will not be generated at the Dugout Canyon Mine.

514.200 Refuse Piles

The frequency and methods of inspections of the waste-rock areas at the SUFCo and Skyline Mines is discussed in their respective M&RPs. Refer to the "Refuse Pile Amendment, February 2003 for inspection information pertaining to the Dugout Mine refuse pile.

All activities performed at this area will be in accordance with the applicable MSHA permit.

514.300 Impoundments

Regular inspections will be made during construction of the sedimentation pond as well as upon completion of construction. These inspections will be made by or under the direction of a registered professional engineer experienced in the construction of similar earth and water structures.

Annual inspections of the sedimentation pond will continue until removal of the structure or release of the performance bond. A certified report of inspection will be prepared by a qualified registered professional engineer and submitted to the Division in the annual report. The report will discuss any appearances of instability, structural weakness or other hazardous conditions, depth and elevation of any impounded waters, existing storage capacity, and existing or required monitoring procedures and instrumentation, and any other aspects of the structure affecting stability. A copy of this report will also be maintained at the mine site.

No impoundments are anticipated within the permit area that are subject to 30 CFR 77.216.

515 Reporting and Emergency Procedures

515.100 Slides

If a slide occurs within the permit area that may have a potential adverse effect on the public, property, health, safety, or the environment, SCM will notify the Division by the fastest available means following discovery of the slide and will comply with any remedial measures required by the Division.

515.200 Impoundment Hazards

If any examination or inspection of an impoundment discloses that a potential hazard is associated with that impoundment that may have an adverse effect on the public, property, health, safety, or the environment, the person who examined the impoundment will promptly inform the Division of the finding and of the emergency procedures formulated for public protection and remedial action. If adequate procedures cannot be formulated or implemented, the Division will be notified immediately.

515.300 Temporary Cessation of Operations

Prior to a temporary cessation of operations within the permit area that will last for a period of 30 days or more or as soon as it is known that a temporary cessation will extend beyond 30 days, CFC will submit to the Division a notice of intention to cease or abandon operations. This notice will include the following:

- A statement of the exact number of surface acres and the horizontal and vertical extent of subsurface strata which have been affected by mining operations in the permit area prior to cessation of operations,
- A discussion of the extent and kind of reclamation activities which will have been accomplished prior to cessation of operations, and
- An identification of the backfilling, regrading, revegetation, environmental monitoring, underground opening closures, and water treatment activities that will continue during the temporary cessation.

During the temporary cessation, CFC will support and maintain all surface access openings to underground operations. CFC will also secure surface facilities in areas in which there are no current operations but where future operations are to be resumed under an approved permit.

520 OPERATION PLAN

521 General

521.100 Cross Sections and Maps

Previously Mined Areas. Plate 5-1 shows the location and extent of known workings of active, inactive, or abandoned underground workings, including openings to the surface, within the permit and adjacent areas. No previously surface-mined areas exist within the permit area. Plate PC5-4 in Appendix 5-10 shows the portal location for an abandoned mine in the vicinity of the Pace Canyon Fan Portal Site.

Mining in the Dugout Canyon area is believed to have had its earliest beginnings in 1925 when D.J. Collins prospected for and initially hand-developed the Red Glow Mine in the Gilson seam on the east side of the canyon. Collins reportedly sold his interest in the reserve to Vaughn O'Niel in 1947, who conducted mining in the same mine on a limited scale for several years thereafter.

The first mining on the west side Dugout Canyon (i.e., the side to be occupied by the proposed portals) reportedly occurred in March 1952 when the E.S.O. Coal Company initiated development of the Rock Canyon seam mine. W.W. Clyde, a well-established Utah road construction contractor, reportedly secured the reserves in Dugout Canyon during the 1950s in order to continue coal mining operations when production ceased in another mine in the region.

Knight-Ideal reportedly initiated mining activity in Dugout Canyon in 1958. Knight-Ideal further developed the original Red Glow mine, developed a mine in the Gilson seam on the west side of the canyon, and also developed a mine in the Rock Canyon seam on the east side of the canyon which was basically superimposed above the Gilson seam mine. For the most part, Knight-Ideal developed the mines simultaneously. Historical reports indicate that, while mining in Dugout Canyon with a total of 16 employees, Knight-Ideal produced approximately 1000 tons of coal per day. Due to a decline

in coal prices and W. W. Clyde's inability to successfully negotiate mining rights in a lease owned by another entity north of the existing mines, Knight-Ideal ceased operations in 1964.

Kennecott Copper and Island Creek Coal Company acquired the leases in the area during the late 1960s but did not activate the reserve. The reserve was again sold to Eureka Energy (a subsidiary of Pacific Gas and Electric Company) in the early 1970s. Due to PG&E's inability to permit fossil fuel fired generating plants in California which would have burned the coal from Dugout Canyon and other local reserves, PG&E sold the reserves to Sunedco, a subsidiary of Sun Company, in the early 1980s. Sunedco had projected to produce up to 5,000,000 tons per year from planned mines in Dugout Canyon and other canyons to the west. They planned to market the coal to the Intermountain Power Agency's generating station in Delta, Utah and export to Pacific Rim nations. Due to a significant decrease in coal prices and Sunedco's failure to negotiate a suitable long-term agreement to supply coal to IPA's generating station, these plans never materialized and the reserves remained inactive.

Sun Company purchased Soldier Creek Coal Company (SCCC) from CalMat in September 1985 and shortly thereafter dissolved their Sunedco subsidiary in Utah, leaving the reserves under the control of SCCC. Coastal States Energy purchased the aforementioned properties as part of their acquisition of SCCC on September 16, 1993.

With mining activities ceasing in Dugout Canyon during 1964, eventual reclamation of the idled mine sites fell under pre-Surface Mining and Control and Reclamation Act (SMCRA) guidelines. As a result, the Utah Division of Oil, Gas and Mining inspected the mine sites after the passage of SMCRA and determined that the earthen filled portals and site drainage were sufficient temporarily. Speculating that development of the reserves would take place in the future, the Division did not require additional reclamation of the area.

Following PG&E's acquisition of the reserves, they opened several portals of the mines in 1979 and conducted limited exploration and coal sampling in the mines before resealing the portals with earthen fill. In 1982, Sunedco reopened select portals of all four mines in Dugout Canyon and, with contract

labor from SCCC, recovered channel samples and conducted limited exploration. Sunedco resealed the portals with the same earthen fill in September 1982.

Existing Surface and Subsurface Facilities and Features. The Applicant acknowledges the requirement in R645-301-521.121 to provide maps to show "the location of all buildings in and within 1000 feet of the proposed permit area" and the requirement of R645-301-521.122 to show the location of "major electric transmission lines, pipelines, and agricultural drainage tile fields". However, as of the time of initial construction of the Dugout Canyon Mine facilities, no buildings are located in and within 1000 feet of the permit area. Furthermore, no major electric transmission lines, pipelines, or agricultural drainage tile fields exist within, passing through, or passing over the proposed permit area.

Two "existing structures" are present within the permit area which were presumably "used in connection with or to facilitate coal mining and reclamation operations for which construction began prior to January 21, 1981" (see R645-100-200). These are an existing county road and a UP&L power distribution line. The existing county road enters the permit area in NE¼, SE¼ Sec. 22, T. 13 S., R. 12 E., extending within that section for approximately 500 feet within the permit area. The road then exits the permit area for approximately 1300 feet of road length, then reenters the permit area in the SW¼ NW¼ Sec. 23, where it ends approximately 300 feet northeast of the southwest edge of the proposed disturbed area boundary (i.e., at the BLM/State property boundary, near the upstream edge of the sedimentation pond). The county road lies on land owned by the entities shown on Plate 1-3. The date of its initial construction is unknown, but is presumed to have been prior to 1981. Other existing roads within the disturbed area and permit area are privately owned and maintained roads. The general locations of roads within and adjacent to the permit area are shown on Plate 5-7.

Plates 4-1 and 5-2 depict the location of an existing UP&L distribution line that will be improved and activated to provide electrical service to the mine. This distribution line, which is not classified as a major electric transmission line, will be owned and upgraded by UP&L. The date of its initial construction is unknown, but is presumed to have been prior to 1981.

Some debris remains within the disturbed area from previous mining operations. That which cannot be salvaged will be disposed of during the construction of the mining facilities. The final disposal location will be determined by the nature of the debris. Durable, rock-type debris may be incorporated into the construction fill if it does not compromise the integrity of the fill. Other debris will be salvaged or disposed of at a permitted off-site facility. All debris will be handled in accordance with applicable Federal, State, and local regulations.

As noted previously, waste rock which is generated at the Dugout Canyon Mine will be disposed of underground or in the approved waste-rock disposal areas at the Dugout Canyon, SUFCo and/or Skyline Mines. The location of the sedimentation pond within the permit area is shown on Plate 5-2. There will be no permanent water impoundments within the permit area.

Landowner, Right-of-Entry, and Public Interest. Plates 1-1 and 1-2 of Chapter 1 show the boundaries of lands and the names of present owners of record of surface lands and subsurface coal, respectively, included in or contiguous to the permit area. CFC has a legal right to enter and begin coal mining operations on all of the lands within the permit area, as noted in Chapter 1, Section 114 of this M&RP.

Coal mining and reclamation operations will be conducted within 100 feet of the right-of-way line of a public road (Dugout Road) at the downstream edge of the disturbed-area boundary. Additional information regarding the steps that will be taken to protect the public on this portion of the public road is provided in Section 526.100 of this M&RP.

As noted in Section 534.300, selection of the final alignment of the reconstructed county road will be the responsibility of Carbon County. It is anticipated that the county road will not be significantly realigned within the permit area. During mining and reclamation operations, this road will be used for mine access and coal haulage.

All roads upstream from the BLM/State property boundary (see Plate 1-3) are private roads.

Subsidence from underground mining operations is not projected to affect public lands where dirt roads exist within the permit and adjacent areas (see Section 525.100 of this M&RP).

Mining Sequence and Planned Subsidence. The mine plan for the Dugout Canyon Mine is presented on Plate 5-7. This map shows the boundaries of all areas proposed to be affected over the estimated total life of the coal mining and reclamation operations, including the size, sequence, and timing of mining of subareas to be affected beyond the present permit term. No surface disturbances are currently anticipated within the permit area beyond that presented in this M&RP (i.e., within the disturbed-area boundary noted on Plates 5-2 and 7-5). Planned-subsidence mining methods will be used in all of the underground mine workings shown on Plate 5-7. Detailed mine progress maps will be submitted to the Division within the annual report.

Plans for mining in areas (leased or unleased) outside of the permit area are dependant upon economic feasibility and obtaining corresponding permits. New areas will be reviewed on a case by case basis.

Land Surface Configuration. Surface contours of undisturbed areas adjacent to proposed disturbed areas associated with the mine are shown on Plate 5-2 for Dugout Canyon and Plate PC5-4 in Appendix 5-10 for the Pace Canyon Fan Portal Site. As stated in Section 521.100 of this M&RP, surface facilities have been in existence in the Dugout Canyon area since the mid-1920s. A similar mining history is assumed in Pace Canyon, refer to Chapter 4, Section 411.100 for additional information. As a result, pre-mining topographic maps do not exist. However, the surface contours in undisturbed areas shown on Plate 5-2 and Plate PC5-4 in Appendix 5-10 are considered generally indicative of original land slopes in the vicinity of the mine.

A map showing topographic conditions prior to disturbance by SCM is provided as Plate 5-4. This map also shows the area of pre-SMCRA disturbance, as mapped in 1980, together with non-mining areas of disturbance which occurred after 1980 but prior to 1996. Plate 5-4 also shows topographic conditions in undisturbed areas extending at least 100 feet from the disturbed area. Plate PC5-4 in Appendix 5-10 shows the condition of the Pace Canyon Fan Portal Site in August 2004.

Surface Facilities. Plate 5-2 shows the locations of the following surface facilities:

- Buildings, utility corridors, and facilities to be used, including:
  Water Tanks - two metal tanks on concrete pads,
  Water Well Pump House - metal building on concrete pad (Appendix 7-9),
  Fueling Station - metal structure and fueling equipment on concrete pad,
  Portals - see Section 529
  Transfer Building - see subsequent portions of this Section,
  Conveyor - see subsequent portions of this Section,
  Truck Loading Bin - metal structure on concrete pad (see Section 528),
  Fan - metal structure containing a fan,
  Substation - metal structure sitting on gravel and concrete pad,
  Small Substation - metal structure sitting on gravel and concrete pad,
  Temporary Waste Rock Storage Area - see Sections 514.200, and 536,
  Roads - see Sections 527.100 and 527.200,
  Sedimentation Pond - see Chapter 7 and Appendix 7-8,
  Office/Bath House/Shop - block and metal building on concrete pad
  Parking Areas - gravel or asphalt pads
  Storage Areas - gravel, asphalt, or soil pads
  Crusher - metal structure on concrete pad/footings
  Coal Sampler - Metal structure on skids, on concrete pad
  Storage Building - Metal structure on concrete pad
  Stoker Coal Storage Bin - concrete container

- The area of disturbance at the mine mouth,
- Coal storage and loading facilities, and
- The explosive storage and handling facility, which includes two metal magazines.

Once the office/bath house/warehouse/shop building was completed in late fall of 2002, the temporary facilities were either removed or relocated. Plate 5-2 reflects where the containers used for the temporary warehouse, storage and foreman facilities were moved following the completion of the new building. These containers were placed on either soil or a gravel pad.

Drainage facilities are shown on Plate 7-5, including the site sedimentation pond, culverts, and ditches.

Cross sections of the proposed surface facilities are provided on Plate 5-3 and Figure 7-9-2 (Appendix 7-9). The disturbed area shown on Plate 5-2 is the same as the land area for which a performance bond or other guarantee has been posted.

Under the currently approved construction plan, several areas within the existing disturbed area boundary will not be significantly disturbed during site construction. The first such area consists of 0.08 acres located on the hillside west of the portal pad, north of the substation access road, and east of the storage area adjacent to that road. The second such area consists of 0.13 acres located on the hillside above the mine haulage/manway portal. Each of the above areas is located on a hillside above the area of actual disturbance.

Plate PC5-2 in Appendix 5-10 shows the layout of the Pace Canyon Fan Portal Site. Cross sections of this facility are also shown on this map. Figure PC-2 in Appendix 5-10 depicts the Gilson seam mine planned workings. (February 2005). Facilities at the Pace Canyon Fan Portal Site will include:

- Portal - see Section 529,
  Fan Shaft - 20 foot diameter shaft, 60 to 70 feet deep,
  Fan and motor building - metal structure containing a fan,
  Transformers - metal structure sitting within a concrete containment structure,
  Emergency Generators - two trailer mounted generators sitting within a concrete containment structure,
  Fuel Storage Tank - Tank sitting within a concrete containment structure adjacent to the generators,
  Topsoil Storage Piles,
  Sediment Trap - see Appendix 7-12.

The pad will accommodate the mine fan, associated ducting and motor building, diesel generators, transformers, fuel storage tank, and intake portal which will also accommodate an escape way. The fan ducting is equipped with a vertical evase (diffuser) to assist in reducing noise associated with the operation of the fan.

Transportation Facilities. Roads that will be constructed, used, or maintained by SCM in the permit area for the mining and reclamation operations are shown on Plate 5-2. No rail systems or overland conveyor systems (other than the material-handling conveyors in the mine yard) will be

associated with the permit area. Drainage structures associated with the roads are discussed in Section 752.200 of this M&RP. Typical cross sections of the primary roads are provided on Figure 5-1. Refer to Sections 527.100 and 527.200 for additional information concerning roads to be used during the mining operation. As shown on Plate PC5-2 the existing road in Pace Canyon will be realigned to allow construction of the facility. However, after construction is complete the realigned road will be treated the same as the BLM road above and below the realigned segment adjacent to the fan site. A pre-existing locked gate below the fan site precludes public access to the BLM road. A typical cross-section of the realigned private road is provided in Appendix 5-10.

A draft environmental assessment (EA) was prepared by the BLM for the Pace Canyon Fan facilities, however OSM and BLM determined a final EA was not required (e-mail, January 24, 2005). BLM comments associated with the proposed fan facilities will be submitted to UDOGM following their review of the M&RP (Personal communications, January 31, 2005, between Vicky Miller (Canyon Fuel Company), David Spillman (Dugout Canyon Mine) and Stan Perks (BLM).

Three material handling conveyors will be constructed on the surface at the mine site. As noted on Plate 5-2, the mine conveyor will transport coal from the mine to the coal stock pile. The reclaim belt will convey coal from the stock pile (via a reclaim tunnel) to the crushing facility. The loadout belt will convey coal from the crusher to the truck loading bin, from which the coal will be loaded into trucks for off-site transport. Each conveyor will be of sufficient size to handle the production levels coming from the mine and the anticipated truck loading rates. Conveyor widths will range from 42 to 60 inches.

Other Relevant Information. Information regarding the BLM surface lease in NW¼ SW¼ Sec. 23, T. 13 S., R. 12 E. is provided in Appendix 1-3. A legal description of the permit boundaries is provided in Section 114 of this M&RP.

521.200 Signs and Markers

Mine and Permit Identification Signs. A mine and permit identification sign will be displayed at the point where the county road ends and the private road enters the surface-facilities area, and at all other possible entrances to the mine site. This sign will be a design that can be easily seen and read, will be made of durable material, will conform to local regulations, and will be maintained until after the release of all bonds for the permit area. The sign will contain the following information:

- Mine name,
- Company name,
- Company address and telephone number,
- MSHA identification number, and
- Permanent program permit identification number as obtained from the Division.

Perimeter Markers. The perimeter of all areas affected by surface operations or facilities will be clearly marked before beginning mining activities. The markers will be a design that can be easily seen and read, will be made of durable material, will conform to local regulations, and will be maintained until after the release of all bonds for the permit area.

Buffer Zone Markers. Stream buffer zone markers will be placed adjacent to Dugout Creek within the disturbed area noted on Plate 5-2 (i.e., at the up- and downstream ends of the Dugout Creek bypass culverts). Each buffer zone marker will be a design that can be easily seen and read, will be made of durable material, will conform to local regulations, and will be maintained until after the release of all bonds for the permit area.

The Dugout Creek markers will be placed adjacent to the stream channel at points where roads enter the disturbed area and in other areas where the stream channel is exposed within the disturbed area. If reaches of the channel in excess of 100 feet in length are exposed within the disturbed area, multiple signs will be placed along those reaches at intervals such that each subsequent sign can be seen from a previous sign.

Markers will parallel Pace Creek on the disturbed area boundary associated with the Pace Canyon Fan facilities. Markers will be easily seen and read, will be made of durable material, will conform to local regulations, and will be maintained until after the release of all bonds for the Pace Canyon Fan facility disturbed area. Multiple signs will be placed along creek reaches at intervals such that each subsequent sign can be seen from a previous sign.

Topsoil Markers. Markers will be placed on all topsoil stockpiles. These markers will be a design that can be easily seen and read, will be made of durable material, will conform to local regulations, and will be maintained until after the release of all bonds for the permit area.

522 Coal Recovery

Mining operations at the Dugout Canyon Mine during the first 5-year mining term will occur in both the Rock Canyon and Gilson Seams.

The overall objective of mining operations in the permit area will be maximum coal recovery coupled with safety. Coal recovery at the mine has been and will continue to be maximized through the following efforts:

- Based on pre-mining analysis of drill-hole data and information obtained from past mining operations in the area, estimates of the nature, depth, and thickness of the coal seam and associated partings have been made. Using these data, the mine plan and mining methods will be periodically evaluated and amended as necessary to maximize coal recovery; and
- Experience gained during mining will be used to amend future mine plans if coal recovery can be increased.

The mine layout has been planned relative to panels, barriers, and pillars to optimize both coal recovery and safety.

Additional information regarding the coal recovery plan is provided in the Confidential Information folder associated with this M&RP. Generally, the minimum mining height will be 6 feet. Anticipated

recovery rates will be as per the approved Resource Recovery and Protection Plan (R2P2). The Confidential Information folder should be consulted for additional details.

523 Mining Methods

A combination of continuous miner and longwall mining methods will be used in the Dugout Canyon Mine. The use of these two mining methods has been selected to maximize coal recovery and enhance production rates within the specific geologic constraints of the permit area.

Continuous Miner Operations. Continuous Miner operations will be conducted at the Dugout Canyon Mine using continuous miners for the following purposes:

- To develop the mains, submains, and panel entries,
- To partially extract coal in areas where surface features require protection, and
- To extract coal in areas where geological conditions or physical boundaries are not suitable for longwall mining.

Panel development employing continuous mining methods will be achieved by driving three panel entries from the main entries along side the designated panels. Each mining panel will then be developed from these entries on the retreat.

Coal will be transported from the continuous miner to the belt feeder by electric shuttle cars. Coal will be conveyed out of the panel and on out of the mine by belt conveyors. Diesel-powered, rubber-tired tractors and service cars will be used to transport personnel and materials from the portals to the working faces.

Pillars in developed entries will be left to protect adjacent panels.

Longwall Mining. Longwall mining will be used for extraction of large, uniform blocks of coal where the panels are more than 2,500 feet in length and where a suitable longwall panel can be laid out. Coal thicknesses of up to 14 feet will be mined in the Dugout Canyon Mine using longwall methods. In areas where coal is thicker than the height capacity of the mining equipment, the unmined coal will be left on the bottom of the bed unless economic or safety conditions warrant otherwise.

The longwall mining system at the Dugout Canyon Mine will consist of three basic integrated sub-systems: self advancing roof support, shearer, and conveyance. Shield-type roof supports will be used. Shield supports are generally considered more suitable for mining conditions such as those encountered at the Dugout Canyon Mine and are designed for expansion, contraction, advancement, and movement in varying thicknesses of coal.

The longwall shearer will utilize a double-ended shearer system for efficiency and flexibility of operation. Such a system consists of two rotary cutting drums mounted on ranging arms which are pivoted to a common body containing the power and drive assemblies. An optimum-tip drive speed is associated with each drum-pick configuration and diameter to assure minimization of fines in the sheared coal. The conveyance system to be used in the mine has been designed to convey extracted coal along the 540 to 1000 foot faces.

Anticipated Production. Anticipated annual production of coal from the Dugout Canyon Mine during the permit term is a follows:

1998 - 0.1 million tons
1999 - 0.7 million tons
2000 - 2.2 million tons
2001 - 3.7 million tons
2002 - 3.9 million tons
2005 - 2009 Anticipated annual average 4,460,000 tons

Major Equipment. Major equipment to be used at the Dugout Canyon Mine is listed in Table 5-1. The same type of equipment or equivalent is expected to be used in the future.

524 Blasting and Explosives

Mining and reclamation activities at the Dugout Canyon Mine and Pace Canyon Fan facilities may require the use of blasting or explosives on the surface during construction of the surface facilities. SCM will comply with all local, State, and Federal laws in the use of explosives during construction of the site and at any other times when blasting is required at the Dugout Canyon Mine. Prior to any surface blasting, SCM will obtain approval of the blasting plan from the Division. A copy of a blasting plan using five pounds or less of explosives is included as Appendix 5-8. A copy of a blasting plan using more than five pounds of explosives is included as Appendix 5-9. A certified blaster will direct all blasting operations with the help of at least one other person. SCM will ensure that all appropriate contractors working on any project at the site are made aware of proper blasting procedures. All blasting records will be kept on file at the mine for the required period of time.

All explosives containers used at the mine will be constructed to meet or exceed the requirements of the Mine Safety and Health Administration. The surface storage containers (one for caps and one for powder) will be placed in a location that will ensure the protection of the environment and personnel (see Plate 5-2). The containers, which will rest on skids, will be constructed of ¼- to ½-inch steel plate with a lining of ½-inch plywood. Each storage container will be secured with a five-tumbler padlock and will contain two vents measuring approximately 3 inches by 3 inches.

A small metal utility trailer will be used for transportation of explosives underground. This trailer will be lined with plywood, with separate compartments for caps and powder. No metal parts will be exposed to the caps or powder. All underground blasting activities at the mine will be conducted under the direction of a MSHA certified blaster.

525 Subsidence

525.100 Subsidence Control Plan

Structures and Renewable Resource Lands. As noted in Section 521.100, no major electric transmission lines, pipeline, or agricultural drainage tile fields exist within the area of potential subsidence. As described in Section 527.100, the roads within the area of potential subsidence consist of private roads that are owned and maintained by the parent company of SCM and private citizens, including the Thayn family. These are unimproved dirt roads that may be used for access to the lease area. Localized damage that occurs to roads not owned by the parent company of SCM will be repaired to a condition acceptable to both the private landowner and SCM. No other structures are known to exist within the area of potential subsidence.

Renewable resource lands within the permit and adjacent areas are shown on Plate 4-1 and discussed in Section 411 of this M&RP. The area of potential subsidence is currently used for livestock grazing and wildlife habitat, with limited timber production on adjacent lands to the east of Dugout Canyon (see Section 411.120). Hydrologic resources in the area are discussed in Chapter 7 of this M&RP. Information regarding baseline groundwater conditions is provided in Section 724.100.

Mining Methods. As noted in Section 523, continuous miner and longwall mining methods will be used in the Dugout Canyon Mine. The size, sequence, and timing for the development of the underground workings are shown on Plate 5-7 and in Annual Reports.

Physical Conditions Affecting Subsidence. A detailed description of the physical conditions in the permit area that may influence subsidence (i.e., overburden lithology and thickness, coal seam thickness, etc.) is provided in Chapter 6. In particular, Plate 6-1 provides a surficial geologic map of the permit and adjacent areas, Plate 6-2 shows the locations of the coal-seam outcrops in the vicinity of the proposed surface facilities, and Figure 6-1, Plate 6-3, 6-3A and 6-3B provide geologic cross

sections based on data collected from drill holes in the area. Furthermore, information related to the physical conditions which may affect mining is presented in Sections 622 (a discussion of the cross sections), 624.100 (a discussion of stratigraphic and structural conditions), and 624.300 (a discussion of rock clay content), as well as Appendix 6-1 (drill-hole logs).

Subsidence Control Measures. Most of the land within the permit area will eventually be affected by subsidence. Anticipated areas of subsidence are shown on Plate 5-7. This subsidence boundary was projected to the surface based on an angle of draw of 30 degrees as measured from the vertical as required in R645-301-525.542. It is presumed that the actual angle of draw will be less, based upon results of mining and subsidence in the general area. Plate 5-7 illustrates the projected extent of subsidence based on a 30 degree angle of draw. The primary areas where future subsidence is not anticipated are the areas overlying the previous workings shown on Plate 5-1 (since these areas will not be re-mined). Plate 5-7 also illustrates a subsidence buffer zone that extends beyond the limits of Federal Lease U7064-027821 and State Lease ML-48435. This buffer zone does not suggest that CFC will mine outside of the lease boundaries, however, it does indicate the limit of projected subsidence.

Subsidence Monitoring. Numerous control points have been established within the permit and nearby areas to assist in subsidence surveys (see Plate 5-7). Coordinates and elevations of these control points (as established in January 1984) are provided in Table 5-2. The control points consist of traverse monuments, benchmark monuments, and survey stations (as indicated on Plate 5-7) which have been constructed generally as follows:

- Traverse and Benchmark Monuments - These monuments are constructed with a 3¼-inch diameter tap-on convex cap with a center punch mark and a 5-footlong center rod. The center rod has been emplaced in a 5.5- to 6-foot deep poured concrete casing of approximately 10 inches in diameter. Where rock was encountered before the required depth, the rock was broken with a stone rod and an anchor point was grouted into the rock using a concrete patching material. Alternatively, monuments in rock were emplaced as described below ("Rock Monuments and Stations"). The diameter of the upper portion of the monument pour was enlarged to 1.0 to 1.5 feet. Concrete was emplaced in a continuous pour.

- Survey Stations - These stations consist of No. 5 rebar rods with a length of 5 feet. Each rebar has been fitted with a 2-inch diameter aluminum cap which has a plastic insert designed to secure the cap to the rod. The caps are plain with a center punch mark and a concave label across the top. Where survey stations are installed in boulders or rock which did not allow the use of a 5-foot length of rebar, they were installed as indicated below ("Rock Monuments and Stations").

- Rock Monuments and Stations - Where survey monuments and stations are established in boulders and rock which does not allow the installation of a 5-foot long rod in a concrete casing, these monuments consist of an aluminum alloy convex marker with a center punch and concave label. They are secured by drilling a ¾-inch diameter hole to a depth of approximately 3 inches and installing the cap in a concrete grout mixture. This product can be obtained from any concrete products center.

Future monuments and stations that are required for proper control will be installed as described above to provide one monitoring point per panel. Since geologic and mining uncertainties often force a change in planned mining sequences, future control points may be installed only after the mine panels are in their development phase.

Subsidence monitoring will be carried out on an annual basis and will entail direct ground surveys and visual surveys of the permit area. The major concern of the subsidence monitoring will be the renewable resources, including perennial streams and springs. The methods to be used for monitoring will be ground surveys of monuments and visual surveys of areas surrounding monitored seeps, springs, and streams during water monitoring or any other surface activities. In addition, roads used to access hydrologic monitoring stations will be visually evaluated during monitoring activities. Following an initial survey prior to the beginning of mining operations, future surveys will concentrate on areas which have been mined in the past or are anticipated to be mined within the upcoming year. Hence, the area of detailed survey may be expanded each progressive year.

Annual re-surveys of the mine permit area will produce vertical control at the same sites as the previous year. Information on each site will be produced annually while the area underlying the site is being actively mined or is still potentially subsiding. The subsiding areas which show no change for two consecutive years will be considered stable and will be omitted from further annual surveys. If

additional mining is anticipated within the stable areas, these areas will again be added to the annual surveys.

In addition to the ground surveys, aerial photogrammetric methods will be included in the surveys when the areas become too large to feasiblely handle with ground surveys. This method may be added to enhance the ground surveys and to cover larger areas as the mine expands. Visual checks for subsidence will be made during all surface activities, especially during water monitoring activities. These visual surveys will be used to detect surface irregularities and surface cracks.

Anticipated Effects of Subsidence. Based on experience in the region and the results of investigations performed by Dunrud (1976), future subsidence in the permit area is anticipated to result in the formation of tension cracks, with these cracks healing to some degree following formation. It is further anticipated that no substantial damage will occur to rangeland conditions as a result of subsidence within the permit area. The only potential effects in that respect will be the exposure of plant roots where tension cracks form.

It is not anticipated that material damage will occur to streams as a result of subsidence. Gentry and Abel (1978) demonstrated that topographic lows (e.g., stream channels) tend to be protected by upwarping of adjacent slopes during subsidence. Therefore, mining-induced surface fracturing should be very limited (or nonexistent) within stream channel areas. Any fracturing that does occur in stream channels is likely to fill rapidly as a result of sedimentation.

It is also not anticipated that subsidence will significantly affect springs within the permit and adjacent areas. Von Schonfeldt et al. (1980) found that uniform subsidence "rarely causes problems to renewable resources such as aquifers, streams, and ranch lands." Since second mining will occur uniformly across the permit area, the resulting subsidence should also be uniform, minimizing the potential impacts to overlying springs.

525.200 Subsidence Control

Adopted Control Measures. SCM has adopted a mining technology which provides for planned subsidence in a predictable and controlled manner. As planned, this subsidence will be uniform, thus minimizing impacts to surface resources.

Compliance With Control Plan. SCM will comply with all provisions of the approved subsidence control plan.

Correction of Material Damage. No material damage of surface resources is anticipated as a result of subsidence in the permit area. However, should material damage occur, SCM will correct any material damage resulting from subsidence caused to surface lands to the extent technologically and economically feasible by restoring the land to a condition capable of maintaining the value and reasonably foreseeable uses which it was capable of supporting before the subsidence. In addition, SCM will notify the Division of any slide, rock fall, or other disturbance known to be caused by subsidence that will have an adverse effect on the environment.

Protection of Significant Surface Resources. None of the following exist within the area of potential subsidence associated with the Dugout Canyon Mine:

- Public buildings or facilities,
- Churches, schools, and hospitals,
- Impoundments with a storage capacity of 20 acre-feet or more or bodies of water with a volume of 20 acre-feet or more,
- Aquifers or bodies of water that serve as a significant water source for any public water supply system, or
- Urbanized areas, cities, towns, or communities.

Hence, no special control measures are required to preclude subsidence impacts to these resources.

Raptor nests and other wildlife resources which may be influenced by subsidence are presented on Plate 3-2. A discussion of protective measures associated with wildlife resources in the permit area is presented in Section 333.300 of this M&RP.

525.300 Public Notice of Proposed Mining

Each owner of property or resident within the area above an underground mining block and adjacent area that may be affected by subsidence will be notified by mail at least 6 months prior to mining or within that period if approved by the Division. The notification will contain:

- Identification of specific areas in which mining will take place;
- Approximate dates the specific areas will be undermined; and
- The location or locations where the SCM subsidence control plan may be examined.

526 Mine Facilities

526.100 Mine Structures and Facilities

As stated in Section 521.100 of this M&RP, no buildings existed at the mine surface at the time construction was begun on the Dugout Canyon Mine. Nonetheless, Section 521.100 of this M&RP indicates that two "existing structures" are present within the permit area which were presumably "used in connection with or to facilitate coal mining and reclamation operations for which construction began prior to January 21, 1981" (see R645-100-200). These are the existing county road and a UP&L power distribution line.

A description of the location of the existing county road within the permit area is provided in Section 521.100 of this M&RP. It is unknown when this road was initially constructed. This road is currently a gravel road which will be modified by the County (see Section 527.200). As indicated in Section 521.100 of this M&RP, it is anticipated that the county road will not be relocated within the permit area.

The county road ends at the BLM/State property boundary, which is located approximately 300 feet northeast of the southwest edge of the proposed disturbed area boundary (i.e., near the upstream edge of the sedimentation pond). Those operations to be conducted within 100 feet of the county road include construction and operation of the sedimentation pond with its associated inflow and outflow structures, construction and operation of the downstream end of culvert UC-5 with its associated energy dissipator, construction and operation of sewer pipeline and storage of materials, snow, or equipment. The owner of the land in this area is the United States of America, as administered by the U.S. Bureau of Land Management. The interests of the public and the landowner will be protected by:

- Complying with the requirements of the BLM land lease.
- Conducting the mining and reclamation operations in compliance with the permit issued by the State of Utah.
- Maintaining a guardrail along the south edge of the road at the outlet of culvert UC-5 and the energy dissipator, whose height will be equal to at least the axle height of the vehicles which frequent the road.
- Maintaining a guardrail along the north edge of the road adjacent to the sedimentation pond, whose height will be equal to at least the axle height of the vehicles which frequent the road.

Plates 4-1 and 5-2 depict the location of an existing UP&L distribution line that will be improved and activated to provide electrical service to the mine. It is unknown when the original distribution line was initially constructed. This line will be upgraded as necessary to provide power to the mine.

Generally, all support facilities will be located within or in close proximity to the associated operations areas. It is currently anticipated that mine support buildings will generally be steel-frame buildings with concrete floors, spread footings, or slab foundations, with metal exterior walls. Buildings of this design have been used extensively in the region and allow for ease of erection, long-term structural integrity, and minimal maintenance.

Building construction will generally involve grading and preparation of foundation areas, excavation and installation of foundations, building erection, interior and exterior finish work, and connection of utilities. Storage areas will generally be open graded, providing outside storage for large supplies. Both building sites and storage areas will be graded to ensure effective drainage to disturbed-area ditches and culverts as noted on Plate 7-5. Operation and maintenance of support structures and facilities at the Dugout Canyon Mine will involve regular grading of facility areas, together with inspection, cleaning, and repairs as required.

No coal processing waste banks, dams, or embankments will exist in the permit area. Sediment that is periodically removed from the sedimentation pond will be disposed of with underground development waste generated from the mine or pumped back into the sealed, abandoned "Gilson West-Old Workings"

General refuse that is generated on site will be stored in a dumpster to be situated at a convenient location within the disturbed area. This waste will consist predominantly of old brattice cloth, ventilation tubing, broken timbers, wire, broken machinery parts, paper, cardboard, and miscellaneous garbage. This non-hazardous, non-toxic, non-coal, non-waste rock refuse will be disposed of periodically through Carbon County at a state-approved landfill. The agreement with Carbon County for disposal of this refuse is provided in Appendix 5-3.

During site construction, operation, and reclamation activities, any spilled petroleum products such as grease, hydraulic fluid, fuel, oil, joint coating, or other pollutants will be removed immediately with the associated contaminated soil and disposed of at a state-approved facility that is permitted to receive such waste. Adequate spill collection materials (including absorbents to stop or contain contaminants that may enter a stream) will be readily available at the site during these activities to contain any such spills.

During construction and other activities at the site, wet concrete will not be allowed to enter or come into contact with stream flows. Any water at the site which is contaminated with wet concrete or other contaminants will not be discharged into stream channels. Concrete trucks and other

equipment used in the mixing and placement of concrete will be washed in areas well away from stream channels.

The air shaft constructed at the Pace Canyon Fan site will either be lined with concrete or steel.

526.200 Utility Installation and Support Facilities

Utility Installations. All coal mining and reclamation operations will be conducted to minimize damage, destruction, or disruption of services provided by electric lines, telephone transmission stations, water lines, and sewer lines which pass over, under, or through the permit area. Areas where these utilities will be located are within non-subsidence zones. No other utility installations exist in the permit area. All utility installations associated with the Dugout Canyon Mine will be removed following mining in accordance with the reclamation plan discussed in Section 540 of this M&RP.

At the Pace Canyon Fan facilities, the fan will operate on electricity transported through the mine. A building with a concrete floor and side walls would be constructed to house the fan's backup diesel generators (fuel tanks hold 1,250 gallon a piece) and a 8,000 gallon diesel fuel storage tank. The concrete building is designed to contain the contents of the 8,000 gallon diesel tank and the spillage of other hydrocarbons within the building (refer to Section 526.200 for cleanup and disposal information). The diesel generators would be linked to the fan via conduit capable of housing the electrical supply and relay devices.

Support Facilities. Support facilities at the Dugout Canyon Mine will be operated in accordance with the permit issued for the mine. Support facilities will be located, maintained, and used in a manner that::

- Prevents or controls erosion and siltation, water pollution, and damage to public or private property;
- To the extent possible, using the best technology currently available, minimizes damage to fish, wildlife, and related environmental values; and
- Minimizes additional contributions of suspended solids to stream flow or runoff outside the permit area.

All support facilities will be removed following mining in accordance with the reclamation plan discussed in Section 540 of this M&RP.

Water Pollution Control Facilities. Water pollution control facilities at the Dugout Canyon Mine consist of the sedimentation pond, the appurtenant structures associated with the sedimentation pond, and a sewage/wastewater holding tank. All water pollution control facilities will be removed following mining in accordance with the reclamation plan discussed in Section 540 of this M&RP.

The sedimentation pond and appurtenant structures will be constructed as discussed in Chapter 7 and will be used and maintained as discussed in Section 533.700. Sanitary sewage will be routed by gravity through a pipeline from the mine surface facility to a below-grade collection tank which will be located adjacent to the office/bath house building. Wastewater which collects in the holding tank(s) will be periodically hauled from the site and disposed of in the sewage lagoon at the Soldier Canyon Mine or the Price River Water Improvement District facility at Wellington, Utah. Approval for the use of these facilities by the Dugout Canyon Mine is provided in Appendix 5-3A

Water pollution control at the Pace Canyon Fan Portal Site will consist of alternate sediment control measures, a sediment trap, and secondary containment for all tanks, transformers, motors and generators. Details regarding the alternate sediment control measures and sediment trap can be found in Appendix 7-12.

527 Transportation Facilities

527.100 Road Classification

Primary roads within the disturbed area include the primary haul road, the coal storage pad road, the substation access road, the portal pad access road, and the water tank access road. The survey monument access road is classified as an ancillary road. The locations of these roads are shown on Plate 5-2. Typical cross sections representing these roads are shown in Figure 5-1.

The private dirt roads outside of the disturbed area but within the permit area will not be classified. These unimproved dirt roads are owned and maintained by the surface land owners, including Canyon Fuel Company, LLC and the Thayn family. They may be used by SCM for access to the lease area surfaces for the collection of monitoring data (environmental and subsidence data) as well as other uses deemed appropriate by the landowner. Travel on roads over land not owned by Canyon Fuel Company, LLC will occur with landowner permission.

527.200 Description of Transportation Facilities

No surface conveyors (other than those in the mine yard immediately adjacent to the portals) or rail systems will be constructed, used, or maintained within the permit area. A description of the conveyor systems that will be used in the mine yard is provided in Section 521.100 of this M&RP.

Road Specifications. Cross sections of roads that will be used or maintained by SCM are provided in Figure 5-1. Information regarding road drainage structures is presented in Chapter 7.

The road which will access the mine is a county road that extends from the Soldier Creek Road (Utah Highway 53) to the mine (a distance of approximately 7.5 miles). Carbon County has upgraded this road to handle the increased traffic which is anticipated as a result of mine operation. The County constructed the upgrade and charges SCM a toll for use of the road.

General specifications for the site roads are provided in Table 5-3. As indicated in Figure 5-1 and Table 5-3, the primary haul road and the coal storage pad, substation access, and portal pad access roads will consist of 2 to 4 inches of granular material, asphalt, or concrete on a compacted, in-place subgrade. The surface of the roads will generally slope at angles of 1 to 2 percent for drainage. The grade of the disturbed-area primary roads will vary, but should not exceed 10% generally or 14% locally. Specifically, the primary haul road (see Plate 5-2) will be constructed at a grade of approximately 7%, the coal storage pad road will generally be constructed at a grade of 14%, the substation access road will be constructed with an approximate grade of 13%, the portal pad access road will be constructed at a grade of about 13%, and the water tank access road will exist in its

current location with an approximate grade of 10 to 14%. The primary water tank access road and the ancillary survey-monument access road will be graded and maintained as a dirt road.

Drainageway Alterations. Alterations of Dugout Creek are planned to accommodate the needs of transportation systems. These alterations consist of installation of culverts in two locations - one on the eastern tributary of Dugout Creek and one along Dugout Creek, beginning approximately 150 feet upstream from the confluence with the eastern tributary and extending downstream to near the sedimentation pond (culverts UC-4 and UC-5, respectively, as noted on Plate 7-5). Pace Creek will not be impacted by the Pace Canyon Fan Portal Site.

Culverts UC-4 and UC-5 provide several advantages, including: allowing coal haulage trucks to enter and leave the surface facilities area, protecting Dugout Creek from coal fines and sediment which may be generated on the adjacent disturbed areas, providing space for equipment and material storage, providing a location for snow to be stacked away from the operations area during winter months, providing additional parking space, and increasing the safety of vehicular traffic by eliminating the drop off into the channel area. These advantages are discussed in further detail below.

Coal haulage trucks will enter and leave the surface facilities area in the loop shown on Plate 5-2 immediately upstream from the sedimentation pond. Culverting of the stream allows a sufficient turning angle for the coal trucks to access and safely maneuver in this area.

The surface facilities at the Dugout Canyon Mine have been designed to adequately control sediment which is generated from those facilities. However, as indicated in Section 521.100 and Plate 5-4 of this M&RP, past mining at the site has resulted in previous disturbance of the surface area. As a result, several areas along the banks of Dugout Creek which may otherwise had not been disturbed by SCM (if the Dugout Creek culvert was not installed) contain overcast, disturbed soils which would have continued to erode into Dugout Creek (see, particularly, the area of "OB" soils noted on Plate 2-2). Culverting of the creek protects it from this sediment as well as from wind-blown coal fines which could otherwise be transported to the stream throughout its length within the disturbed area.

The mine surface facilities have been constructed in a narrow canyon, not dissimilar to conditions at Canyon Fuel operations located at the SUFCO and Soldier Canyon Mines. Surface storage and parking requirements at the mine site are as follows:

- Based on experience at the SUFCO and Soldier Canyon Mines, Canyon Fuel estimates that approximately 3 acres of land will be required for surface storage of equipment and materials (e.g., man trips, maintenance trucks, supervisor vehicles, roof bolts, timbers, cribbing, etc.).

- Average annual snowfall at Price, Utah is 46.4 inches (Brough et al., 1987). Assuming that 10 percent of this melts and runs off to the sedimentation pond, 42 inches of snowfall will remain to be cleared from the mine yard. This will result in 17.5 acre-feet of snow from the 5.0-acre area of working pad space (i.e., the lower office and truck turn-around pad together with the portal pad, excluding the sedimentation pond and the coal-storage pad as well as the substation pads and the water tank pad with their respective access roads). Assuming that this snow compacts by a factor of 2 during handling, space must be provided for 8.8 acre-feet of snow. Assuming further that this snow will remain essentially unmelted during the winter months (due to temperatures in the shaded canyon) and that it can be stacked 10 feet deep, an area of 0.9 acre will be required at the mine for snow storage.

- The mine currently intends on employing 150 personnel. Based on this figure, it is estimated that 70 parking stalls will be required at the mine site (50 per shift, plus additional stalls for single shift administrative personnel and visitors). Standard parking-lot design is based on a 9-foot (width) by 20-foot (length) stall, with a distance of 25 feet between rows of stalls to permit turning and driving. With two rows of 35 stalls and a turning area between the rows, the parking area will require a width of 65 feet (two stall lengths plus the turning area) and a length of 315 feet (35 stalls times a width of 9 feet per stall), or a total surface area of 0.5 acre.

The above figures indicate that a desirable storage and parking area of 4.4 acres will be required at the Dugout Canyon Mine (3.0 acres for equipment and materials storage, 0.9 acre for snow storage, and 0.5 acre for parking). However, the following figures indicate that only about 1.8 acres of storage and parking are available at the site (compare with Plate 5-2):

- 0.7 acre on the inside of the truck turn around northeast of the sedimentation pond;

- 0.3 acre immediately southwest of the office/bath house building;

- 0.5 acre immediately northeast of the office/bath house building;
- 0.1 acre in the storage area on the north side of the substation access road; and
- 0.2 acre adjacent to the fan portal.

Given the relatively small area of the Dugout Canyon surface facilities, and with space at a premium, installation of the Dugout Creek culvert is an important part of providing the storage and parking space that will be needed at the mine.

A final advantage of installing the Dugout Creek culvert throughout the disturbed area is the improved safety for surface operations that the culvert affords. In several areas of the site, the embankments into the stream have been over steepened by past activities, with vertical slopes present in selected areas where deep down cutting has occurred from past blockage of an old culvert at the site. Installation of the Dugout Creek culvert has eliminated the safety hazard associated with most of these steep slopes.

R645-301-358.400 requires that coal mining and reclamation operations be conducted in a manner that "will avoid disturbance to, enhance where practicable, restore, *or* replace, wetlands and riparian vegetation along rivers and streams . . ." (emphasis added). Installation of culverts UC-4 and UC-5 can unfortunately not be accomplished in a manner that will avoid disturbance to the riparian vegetation along Dugout Creek. However, as noted in Section 322.200 of this M&RP, the lost riparian vegetation will be replaced within the Dugout Creek watershed during the operational period at a ratio of three feet of replacement for every one foot of lost vegetation. This action will also immediately enhance the riparian vegetation in the areas where the mitigation is implemented.

Furthermore, during reclamation of the site, the riparian vegetation within the disturbed area will be both enhanced and restored. Enhancement of the riparian vegetation will be facilitated through the construction of reclaimed Dugout Creek channels which, as indicated in Section 762.100 of this M&RP, have been specifically designed to improve the geomorphological stability of the stream. By increasing this stability, the riparian vegetation will be enhanced and restored along the stream to a condition

which more closely mimics that which probably existed prior to disturbance of the site. Hence, through installation of culverts UC-4 and UC-5, the requirements of R645-301-358.400 will be met by immediately replacing and enhancing riparian vegetation in the Dugout Canyon watershed, and by ultimately (upon reclamation) restoring the riparian vegetation within the disturbed area. The enhancement, restoration, and replacement activities will result in an improvement of the riparian system to a condition which greatly exceeds that which is present prior to installation of the culverts.

Information regarding the design of these culverts is presented in Section 732.300 of this M&RP. Prior to installation of the culverts on Dugout Creek, silt fences were emplaced in the stream channel perpendicular to the flow direction in accordance with Figure 5-4. A minimum of four such silt fences were installed in the creek downstream from the county culvert outlet but within the disturbed area. The downstream-most silt fence was installed in the stream at the downstream end of the disturbed-area boundary, downstream from the location of the county culvert. The silt fences were located in an area convenient for maintenance and cleanout. The silt fences were removed after completion of all initial site construction activities. During culvert installation, the silt fences were periodically inspected and accumulated sediment removed from behind the silt fences when required to minimize downstream impacts.

No bridges are currently planned for the site.

Road Maintenance. The road which will access the disturbed area will be owned and maintained by Carbon County. SCM will pay a toll for use of the road, with this toll being used by the County for repayment of upgrade costs and maintenance. In the event of a catastrophic event that causes damage to the county road, SCM will cooperate with the County to promote rapid repair of the road as soon as practical following the catastrophic damage. For all primary roads within the permit area that are not owned by the county, SCM will itself repair the road (or cause it to be repaired) as soon as practical following the catastrophic damage.

The roads within the surface-facilities area will be maintained by SCM as necessary to permit access to the respective facilities. The remaining roads in the permit area are private roads and will be

maintained by SCM as required to permit access for environmental monitoring and subsidence surveying. Roads on land not owned by Canyon Fuel Company, LLC will be maintained by SCM if a maintenance agreement is reached with the landowners. Trespass on private roads will take place only with landowners permission.

528 Handling and Disposal of Coal, Excess Spoil, and Coal Mine Waste

528.100 Coal Handling and Transportation

Coal will be removed from the underground workings using the mining methods and conveyor system described in Section 523. A material flow diagram for the surface at the mine portal is provided in Figure 5-2.

Run-of-mine coal will be brought out of the mine by conveyor belt to a transfer bin. From the transfer bin, the coal will be fed to the coal storage pile, from which it will be conveyed via a reclaim tunnel to the crusher and then via the loadout conveyor to the truck loadout bin. From the bin, the coal will be loaded onto trucks and transported from the site.

528.200 Overburden

No overburden will be removed, handled, stored, or transported within the permit area.

528.300 Spoil, Coal Processing Waste, Non-Coal Waste, and Mine Development Waste

Excess Spoil. No spoil will be generated at the Dugout Canyon Mine. Sediment removed from the sedimentation pond will be handled in accordance with Section 732.200 of this M&RP.

Coal Processing Waste. SCM will not process their coal at the Dugout Canyon Mine beyond crushing. Thus, no coal processing waste will be generated in the permit area.

Burning and Burned Waste Utilization. As noted below and in Section 536 of this M&RP, waste rock generated from the Dugout Canyon Mine will be permanently disposed of either underground or at permitted facilities located at the Dugout, SUFCo or Skyline. If coal mine waste fires occur at the permitted disposal/storage facilities, they will be controlled in the manner outlined in their respective permits.

Waste rock will only be temporarily stored at the surface of the Dugout Canyon Mine prior to ultimate disposal. If spontaneous combustion of this material does occur, the burning section will be removed from the remainder of the pile using a backhoe or other appropriate means. The affected waste rock will then be spread so that the material can cool and mixed with soil to extinguish the fire. The extinguished material will then be returned to the waste pile.

Non-Coal Mine Waste. Non-coal (non-waste rock) waste generated in the permit area will be temporarily stored in a dumpster to be situated at a convenient location within the disturbed area. This waste will be disposed of periodically at a permitted landfill.

Liquid wastes such as oil and solvents will be contained and disposed of or recycled, in accordance with applicable State and Federal regulations, at facilities which are permitted to accept such wastes. Small quantities of such wastes (e.g., resulting from cleanup of small spills, etc.) may be contained onto absorbent pads prior to disposal. In all cases, disposal and/ or recycling will be only at sites which are permitted by appropriate regulatory authorities to accept such waste.

No non-coal (non-waste rock) waste will be permanently disposed of within the permit area other than, potentially, some durable rock-type construction materials such as cinder block, which may be disposed of underground. Non-coal (non-waste rock) waste will be temporarily stored at the site prior to permanent off-site disposal either in a dumpster or in the temporary waste-rock storage area. Off-site disposal will be only at sites which are permitted by appropriate regulatory authorities to accept such waste.

It is currently anticipated that no non-coal waste that is defined as hazardous under 40 CFR 261 will be generated at the mine. If such waste is generated in the future, it will be handled in accordance with the requirements of Subtitle C of the Resource Conservation and Recovery Act and any implementing regulations.

Underground Development Waste. Underground development waste which is generated at the Dugout Canyon Mine will be disposed of either:

- Underground within the Dugout Canyon Mine (without bringing this waste to the surface);
- At the approved temporary waste-rock storage site at the Banning Loadout;
- At the approved waste-rock disposal facility at the Dugout Canyon Mine, SUFCo Mine and Skyline Mine.

Descriptions of the waste-rock disposal facilities at the Dugout Canyon Mine (Refuse Pile Amendment, February 2003), SUFCo Mine and the Skyline Mines are provided in their respective M&RPs. A discussion of the disposal of underground development waste in the underground workings of the Dugout Canyon Mine is provided in Section 536.500 of this M&RP.

Material such as subsoil and rock generated during construction of the shaft and portal at the Pace Canyon Fan Site will be used to construct the site. The layout for the shaft and portal has been designed to avoid oxidized or burnt coal, however should it be encountered during construction these materials will either be hauled to a waste rock facility for permanent disposal or stored underground, upon approved by MSHA. Refer to Section 536.500 for additional discussion.

Minimization of Acid, Toxic, and Fire Hazards. Data presented in Chapter 6 indicate that neither acid- nor toxic-forming materials are present in the overburden, underburden, or coal. These conclusions are supported by the data contained in Appendix 5-7 and RA Attachment 5-4 (Refuse Pile Amendment), which provides the results of analyses of waste-rock materials. Should an acid- or toxic-forming problem with the waste rock be identified during future sample collection, those materials so identified will be buried within 30 days after the material is exposed at the mine site.

As noted previously in this section, temporary storage of debris generated at the mine will be in a dumpster. As a result, this debris will be protected from the wind and other elements. Because debris that is generated at the mine site will be only temporarily stored at the mine prior to off-site disposal, there is no significant potential for this debris to spontaneously combust. Fire extinguishers will be kept on mobile equipment in the mine yard to extinguish any fires should combustion of the waste materials occur. No waste materials that constitute a fire hazard will be accumulated in the permit area. No hazardous materials, as defined in 40 CFR, will be disposed of underground. These materials will be disposed of in accordance with all applicable state and federal regulations.

528.400 Dams, Embankments, and Impoundments

No dams, embankments, or impoundments will be used for the handling or disposal of coal, overburden, excess spoil, or coal mine waste in the permit area.

529 Management of Mine Openings

It is currently anticipated that five underground mine openings will be associated with the Rock Canyon and Gilson Seams. A portal and shaft will be constructed into the Gilson seam at the Pace Canyon Fan Portal Site (see Plate PC5-2 in Appendix 5-10). The primary purpose of the shaft and portal will be for ventilation. The portal will also be used as an emergency escape way. A fence will be installed to surround the Pace Canyon Fan facilities to assist in managing the mine openings, refer to Figure PC-3 in Appendix 5-10 for the approximate location of the fence. Two types of fence will be used at the Pace Canyon site, both fences will be eight feet tall, one will be constructed of chain link, the other will be field fence (refer to Appendix 5-10 for details). The field/wildlife fence will be constructed per DWR wildlife exclusionary fence recommendations. Since the facilities are behind a locked gate, barb wire is optional for the top of the chain link. Should additional protection become necessary at the Pace Canyon Portal opening, a gate across the portal entrance will be installed. Additional openings into the Gilson Seam may be planned in the future but are not part of this M&RP.

Locations of the Rock Canyon portals are shown on Plate 5-2. One of these openings will serve as primary pathway for ingress and egress of personnel and machinery, one will serve as a beltway for removal of coal from the mine, and one will be used for mine ventilation. The remaining two portals are existing openings into the old workings and will be reopened as air-intake portals.

Each underground mine opening will be protected from deterioration through the installation of steel sets and timbers. Concrete and liner plate steel may also be used.

Any portals which become temporarily inactive in the permit area, but have a further projected useful service, will be protected through the installation of a lockable chain-link gate to prevent unauthorized entry. Warning signs will be posted to identify the hazardous nature of the opening. These protection and warning devices will be periodically inspected and maintained in good operating condition during the period of temporary inactivity.

530 OPERATIONAL DESIGN CRITERIA AND PLANS

531 General

This application contains a general plan for the sedimentation pond and sediment traps to be installed within the permit area. No other water impoundments or coal processing waste banks, dams, or embankments will exist in the permit area.

No mineable coal exists beneath the proposed sedimentation pond or sediment traps. Thus, subsidence will not affect operation of the pond or traps.

532 Sediment Control

Sediment-control measures for the Dugout Canyon Mine are described in detail in Section 732 of this M&RP. The sedimentation pond will be located at the downstream end of the mine yard. Runoff-

control structures at the mine yard have been designed to convey runoff in a non-erosive manner. The sediment trap located at the Pace Canyon Fan Portal Site is discussed in Appendix 7-12.

In addition to the use of sedimentation ponds and properly designed runoff-control facilities, sediment yields in the permit area are minimized by:

- Disturbing the smallest practicable area during the construction or modification of surface facilities and
- Contemporaneously reclaiming areas suitable for such reclamation.

533 Impoundments

533.100 Slope Stability

The only impoundment with an embankment that will be constructed, used, or maintained by SCM will be the sedimentation pond at the mine surface. A slope-stability analysis which was performed on this pond embankment is provided in Appendix 5-4. According to this analysis, the minimum safety factors for the sedimentation pond embankment 1.6 under static saturated conditions. Furthermore, the analysis presented in Appendix 5-4 indicates that a minimum safety factor of 2.0 will exist for the upstream embankment under conditions of rapid drawdown. All analyses were performed assuming that the pond was full to its maximum design depth. These safety factors exceed the minimum requirements of R645-301-533.100. Refer to the Refuse Pile amendment for a discussion of it's associated pond.

533.200 Foundation Considerations

Soils investigations have been conducted at the site of the proposed Dugout Canyon surface facilities. Results of these investigations are presented in Chapter 2 and Appendix 5-4 of this M&RP. During these investigations, foundation conditions in the area of the proposed sedimentation pond were evaluated. Based on these investigations, no conditions were encountered which suggested that the

foundations upon which the pond would be constructed would be unstable. The slope-stability analyses presented in Appendix 5-4 indicate that the pond foundations will also be stable under operating conditions.

Prior to construction of the sedimentation pond, all vegetative matter and topsoil will be removed from the foundation area. Detailed cross sections of the sedimentation pond are presented on Plate 7-4 of this M&RP.

533.300 Slope Protection

The outslopes and inslopes of the sedimentation pond and sediment trap in Pace Canyon will be revegetated following construction to minimize surface erosion and protect the embankments against sudden drawdown. The seed mix to be used for this revegetation effort is described in Section 341.200 of this M&RP.

In the event of a storm, rapid drawdown in the sedimentation pond would be restricted to the vertical distance between the spillway and the peak water level, a distance of 0.20 foot (Plate 7-4). Drawdown of this magnitude is not considered significant and, therefore, not of erosional concern. The analysis presented in Appendix 5-4 indicates that the upstream slope of the embankment will be stable under conditions of rapid drawdown (minimum safety factor of 2.0).

During normal decant of the sedimentation pond, flow rates (and drawdown) will be controlled. Hence, it is unlikely that this drawdown will cause surface erosion of the embankment face.

533.400 Embankment Faces

Embankment inslopes and outslopes will be revegetated following construction of the sedimentation pond and Pace Canyon sediment trap, as outlined in Section 533.300. Riprap will also be placed on the upstream face of the embankment near the discharge structure.

533.500 Highwalls

No highwalls will be located below the water lines of the sedimentation pond.

533.600 MSHA Criteria

The sedimentation pond does not meet the size criteria of 30 CFR 216(a).

533.700 Pond Operation and Maintenance Plans

The sedimentation pond has been designed in accordance with R645-301-740. Details of these designs, and the requirements for operation and maintenance of the pond, are presented in Chapter 7 of this M&RP.

534 Roads

534.100 Location, Design, Construction, Reconstruction, Use, Maintenance, and Reclamation

Control of Damage to Public or Private Property. All roads used by SCM have been or will be designed in accordance with applicable county and State standards. By designing according to these standards, damage to public or private property will be been minimized.

Road Surfacing. The surface of the county road which accesses the mine site will consist of asphalt. Remaining roads will be either asphalt-surface, gravel-surface, or unimproved dirt roads (see Sections 527.100 and 527.200 and Figure 5-2). Road surface material will be determined at the time of facility development and will meet performance standards for their specific surface material and function. No acid- or toxic-forming materials will be used in the road surfaces.

Slope Stability. The stability of the primary haul road embankment has been evaluated where it passes adjacent to the sedimentation pond. Results of this evaluation are presented in Appendix 5-4. This analysis indicates that the road embankment has a minimum safety factor of 3.5 under static saturated conditions. This value exceeds the safety factor of 1.3 required by R645-301-534.130.

Analyses presented in Appendix 5-4 indicate that placing the site materials at a slope of 1.5H:1V during reclamation will result in a minimum safety factor of 2.6 for slopes up to 30 feet in height. Lesser slopes were shown to have higher safety factors. Since the same or better materials will be used for construction of the operational facility, the remaining primary roads at the site are deemed to be stable under operational conditions.

As indicated in Table 5-3, the survey monument access road (an ancillary road on the south side of the facility) has fill slopes with angles that approach 1H:1V. This road was constructed by others several years ago and shows no signs of slope failure. Results of slope-stability analyses of this road, presented in Appendix 5-4, indicate that the slopes associated with this road are stable, with a critical safety factor of 1.5 when the entire slope length is considered (extending from the cut above the road to the facility pad below). When only the immediate vicinity of the road is evaluated (i.e., extending from the cut above the road to the bottom of the fill associated with the road), the minimum safety factor is. Hence, even under the worst-case conditions of the survey monument access roads, the stability criteria of R645-301-534.130 have been met. Thus, all roads associated with the facility area are deemed to be stable.

All other roads in the permit area exist on private land owned by Canyon Fuel Company, LLC. No stability problems are anticipated for these roads.

534.200 Environmental Protection and Safety

The design and reconstruction of the county road will be the responsibility of Carbon County. Safety and environmental protection were primary concerns during the design of other roads within the

surface-facilities area. The grade, width, and surface materials used for the roads were selected to be appropriate for the planned duration and use of the roads.

534.300 Primary Roads

General. The design and reconstruction of the county road which accesses the mine site will be the responsibility of Carbon County. The road will be maintained by the County to meet its design standards throughout the life of the mining and reclamation activities. SCM will assist the County to ensure that catastrophic events are repaired as soon as practical after the damage occurs.

As noted in Section 534.100, the embankment of the primary haul road adjacent to the sedimentation pond will have a minimum static safety factor in excess of 1.3. Additional information regarding primary roads within the permit area is presented in Section 527 of this M&RP. Any portion of the primary haul road within the permit area that is not to be retained for use under an approved post-mining land use will be reclaimed immediately after it is no longer needed for mining and reclamation operations.

Road Alignment. Selection of the final alignment of the reconstructed county road will be the responsibility of Carbon County. The alignment will be located generally along the alignment of the existing dirt road except potentially where this dirt road meets the Nine Mile Canyon Road (see Plate 1-3). The potential realignment of the dirt road at its intersection with the Nine Mile Canyon road is anticipated to improve the site distance of the road. The current road location had been in existence for many years and had not experienced major stability problems. Thus, the road will be located on the most stable available surface, giving consideration also to safety and environmental protection.

Road Surfacing. The county road which accesses the mine site will be surfaced with a non-rutting asphalt concrete. This surface will be designed to account for the anticipated volume of traffic as well as the weight and speed of vehicles using the road.

Road Maintenance. The county road will be maintained by Carbon County.

Road Culverts. All culverts along the county road will be designed, installed, and maintained by Carbon County. Culverts to be installed within the surface facilities have been designed in accordance with the hydrologic criteria discussed in Section 742.300. These culverts will be installed in accordance with manufacturer's recommendations to sustain the vertical soil pressure, the passive resistance of the foundation, and the weight of vehicles using the road.

535 Spoil

No spoil will be generated in the permit area. No valley fills or head-of-hollow fills will be created for the disposal of spoil material. Furthermore, no excess spoil will be disposed of in pre-existing benches.

536 Coal Mine Waste

Coal mine waste resulting from mining activities at the Dugout Canyon Mine will be disposed of either in the underground workings within the permit area or at the approved waste-rock disposal facilities operated at the Dugout Canyon Mine, SUFCo Mine or at the Skyline Mine waste-rock storage facilities. Descriptions of the aforementioned facilities are presented in the respective M&RPs.

The coal mine waste generated from the Dugout Canyon Mine may be temporarily stored on the surface of the Dugout Canyon Mine facilities at the location shown on Plate 5-2 prior to ultimate disposal. Coal mine waste which is temporarily stored on the surface at the mine site will be removed from the temporary waste-rock storage area and placed in its final disposal area at the frequency noted in Section 513.400 of this M&RP. Runoff from the temporary waste-rock storage area will report to the mine-site sedimentation pond and be treated accordingly.

536.100 Design

The waste-rock disposal facilities were designed to achieve minimum long-term static safety factors of at least 1.5. These designs and the associated evaluations were based on the results of detailed foundation and laboratory analyses of soils at the sites of the disposal facilities.

Due to the temporary nature of the waste-rock storage area shown on Plate 5-2, the long-term static safety factor of this material has not been evaluated. Foundation conditions beneath the pad on which the waste rock will be temporarily stored are discussed in Chapter 2 and Appendix 5-4 of this M&RP.

536.200 Waste Emplacement

Waste rock from the Dugout Canyon Mine that is to be hauled to the Dugout, SUFCo or Skyline Mines disposal sites will be emplaced in accordance with the respective M&RPs. This waste will be placed in a controlled manner to ensure the mass stability of the waste piles and prevent mass movement during and after construction. The waste rock will be covered periodically to minimize public hazards and the potential for spontaneous combustion. Waste rock that is disposed of in underground workings will be emplaced in accordance with Section 536.500 of this M&RP.

Waste rock will be emplaced in the temporary storage areas at the Dugout Canyon Mine using front-end loaders and other appropriate earth-moving equipment. Due to the temporary nature of this storage, mass movement, public hazards, and spontaneous combustion of the material will not occur prior to its ultimate disposal.

536.300 Excess Spoil Fills

No excess spoil fills will exist in the permit area.

536.400 Impounding Structures Constructed of Coal Mine Waste

No impounding structures will be constructed of coal mine waste in the permit area.

536.500 Disposal of Coal Mine Waste in Special Areas

Coal mine waste generated at the Dugout Canyon Mine will be disposed of at either the approved facility, or in underground workings within the permit area. The source of this material will be primarily

waste rock resulting from partings and splits in the coal seam. As indicated in Chapter 6, neither acid- nor toxic-forming materials are present in the overburden, underburden, or coal (i.e., the material that will comprise the waste rock that will be generated from the Dugout Canyon Mine). Prior to the disposal of underground development waste within the permit-area mine workings, approval for such disposal will be obtained from MSHA.

The waste rock which will be stowed underground will be backfilled into dead-end panels primarily near the outer extent of the area to be mined. Backfilling will occur prior to second mining to ensure that adequate roof support exists in the area. No influence on the active mining operation is anticipated from the backfilling process.

The waste rock to be disposed of underground will be transported to the backfill area by mine haulage equipment and will be in an unsaturated condition. Hence, underground retaining walls to prevent seepage of the material into the mine workings will not be necessary.

After second mining, the roof will collapse, causing the waste rock in the mine to compact. Because the waste rock will be emplaced primarily in dead-end panels near the outer extent of the area to be mined, the surface effect of the backfilling operation will be to reduce the surface expression of subsidence in an area where subsidence will already be minimal. Hence, subsidence over the permit area in general will still occur uniformly.

As noted previously, the waste rock will be emplaced in an unsaturated condition using mine haulage equipment. Hydraulic transport media will not be used to emplace the material. As a result, the waste rock will not require dewatering, construction of barriers to retain water underground which might drain from the waste, or treatment of water from the waste which might be discharge to surface streams. Hence, no impacts on the hydrologic regime are anticipated due to disposal of the waste rock in the underground workings.

536.600 Underground Development Waste

A detailed description of the geotechnical investigations, design, construction, operation, maintenance, and reclamation of the waste-rock disposal sites at the SUFCo and Skyline Mines is provided in their respective M&RPs. These M&RPs also contain:

- Descriptions of pre-disturbance soil resources at the waste-rock disposal sites;
- Descriptions of plans for stockpiling topsoil at the waste-rock disposal sites; and
- Discussions of the suitability of the material for reclamation.

536.700 Coal Processing Waste

No coal processing waste will be generated within the permit area.

536.800 Coal Processing Waste Banks, Dams, and Embankments

No coal processing waste banks, dams, or embankments will exist within the permit area.

536.900 Refuse Piles

A detailed description of the waste-rock disposal/storage sites at the Dugout Canyon Mine (Refuse Pile Amendment, February 2003), SUFCo and Skyline Mines is provided in their respective M&RPs. These M&RPs provide:

- A description of pre-disturbance soils at the sites;
- Certification of the design and plans;
- Compliance with applicable MSHA regulations;
- A description of proposed inspection activities;
- A description of the design, stability, operation, and reclamation of the waste-rock sites; and

- A discussion of runoff- and sediment-control plans associated with the sites.

The suitability of the waste rock to be generated from the Dugout Canyon Mine for reclamation is discussed in Chapters 2 and 6 of this M&RP.

With respect to the temporary waste-rock disposal area designated on Plate 5-2, the following information can be found in the indicated sections of this M&RP:

- A description of pre-disturbance soils at the sites - Chapter 2
- A description of the suitability of the waste rock for reclamation - Chapters 2 and 6
- Certification of the design and plans - Section 512
- Compliance with applicable MSHA regulations - Section 513.400
- A description of proposed inspection activities - Section 514.200
- A description of the design, stability, operation, and reclamation of the temporary storage area - Section 536 and 540
- A discussion of runoff- and sediment-control plans associated with the temporary storage area - Section 740

537 Regraded Slopes

537.100 Division Approval

No mining or reclamation activities will be conducted in the permit area that require approval of the Division for alternative specifications or for steep cut slopes due to the inability of SCM to meet regulatory requirements for:

- Protection of fish, wildlife, and related environmental values (R645-301-358);
- Certification of the design of the access road (R645-301-512.250);
- Road classification (R645-301-527.100);
- Maintenance of roads to meet their design standards throughout their use or remediation of damage caused by catastrophic events (R645-301-527.230);

- Location, design, construction, reconstruction, use, maintenance, or reclamation of roads in a manner that prevents damage to public or private property, utilizes nonacid- and nontoxic-forming substances in road surfacing, and achieves an acceptable static safety factor against slope failure (R645-301-534.100);

- Design of roads to ensure environmental protection and safety (R645-301-534.200);

- Design, location, surfacing, maintenance, and drainage of primary roads in a manner that allows continued use of the road (R645-301-534.300);

- Retention of a road following reclamation that is not necessary as part of an approved post-mining land use (R645-301-542.600 and R645-301-762); and

- Road drainage (R645-301-742.410, R645-301-742.420, and R645-301-752.200).

537.200 Regrading of Settled and Revegetated Fills

All settled and revegetated fills which currently exist within the disturbed area due to historic mining in the area will be regraded during site construction activities. No plan is presented in this M&RP to retain these settled and revegetated fills following reclamation.

540 RECLAMATION PLAN

541 General

541.100 Commitment

Upon the permanent cessation of coal mining and reclamation operations at the Dugout Canyon Mine, CFC will close, backfill, or otherwise permanently reclaim all affected areas in accordance with the R645 regulations and this reclamation plan.

541.200 Surface Coal Mining and Reclamation Activities

No surface coal mining and reclamation activities will be conducted in the permit area.

541.300 Underground Coal Mining and Reclamation Activities

All surface equipment, structures, or other facilities not required for continued underground mining activities and monitoring, unless approved by the Division as suitable for the post-mining land use or environmental monitoring, will be removed and the affected lands reclaimed following permanent cessation of mining operations.

541.400 Environmental Protection Performance Standards

The plan presented herein is designed to meet the requirements of R645-301 and the environmental protection performance standards of the State Program.

542 Narratives, Maps, and Plans

542.100 Reclamation Timetable

A timetable for the completion of each major step in the reclamation plan is presented in Figure 5-3.

542.200 Plan for Backfilling, Soil Stabilization, Compacting, and Grading

The regrading plans for the waste rock disposal facilities at the Dugout Canyon Mine (Refuse Pile Amendment, February 2003), SUFCo and Skyline Mines are presented in their respective M&RPs. The Dugout Canyon and the Pace Canyon Fan Portal Site regrading plans were designed to meet the objectives of balancing cut and fill quantities, maintaining a geotechnically stable base. The primary features of this plans are:

- Removal of the pad upon which surface activities will be constructed at the mine, thereby creating a slope which will adequately drain while minimizing long-term erosion concerns;
- Backfilling to remove highwalls within the objectives noted above (cut and fill balance, site stability, and erosion control),
- Construction of stable channels across regraded areas;
- Placement of topsoil;
- Revegetation and mulching of the topsoiled site; and
- Removal of the sedimentation pond and sediment trap (together with accompanying regrading, topsoiling, revegetation, and mulching of the sedimentation pond area) and implementation of interim sediment-control measures.

The estimated cut quantity for the Dugout Canyon facility is approximately 97,575 cubic yards with an estimated fill of 99,630 cubic yards (see Appendix 5-5). The difference between these two quantities is anticipated to be balanced by compaction and the import of topsoil from the stockpile. Regrading activities will continue until the final surface configuration defined by Plates 5-5 and 5-6 is approximated. Details regarding topsoil placement and revegetation following regrading are provided in Chapters 2 and 3, respectively.

The estimated cut quantity for the Pace Canyon Fan Portal Site is approximately 6,361 cubic yards with an estimated fill of 6,287 cubic yards. These values include 2,128 cubic yards of topsoil being placed on the surface and approximately 972 cubic yards of material being used to backfill the portal and shaft (refer to Section 542.700 for additional sealing information). The difference between these two quantities is anticipated to be balanced by swell of the cut material. Regrading activities will continue until the final surface configuration defined by Plate PC5-5 in Appendix 5-10 is approximated. Details regarding topsoil placement and revegetation following regrading are provided in Chapters 2 and 3, respectively.

Building Demolition. Prior to significant regrading activities at the Dugout Canyon facility and Pace Canyon Fan Portal Site, existing buildings, retaining walls, utilities, coal-handling facilities, and other

above-ground structures will be removed from the area. To the extent possible, these structures and facilities will be salvaged. Those materials requiring off-site disposal will be placed in a permitted landfill. Final decisions regarding salvage or disposal of structures and equipment will be made just prior to reclamation following an assessment of the salvageability of the structures and equipment. If foundations will not interfere with regrading activities, they will be left in place for on-site burial under at least 4 feet of soil cover.

Backfilling and Compaction. All vegetation, organic matter, and debris will be cleared from areas to receive fill. The cut material from site regrading will be placed as fill and graded to facilitate drainage from the site and contributing side areas. All fill placed during recontouring of the site will be compacted to at least 85 percent of maximum Proctor density (ASTM D698). Compaction will be accomplished using repeated passes of rubber-tired equipment, rollers, and other appropriate equipment.

Side hill embankments, where the width is too narrow to allow access by compaction equipment, will be initially constructed by spreading the soil with a dozer, but only to a width necessary to allow compaction equipment access. After this is achieved, the fill will be placed in lifts and compacted to at least 85 percent of maximum Proctor density.

Lifts will be placed with a thickness when compacted of no more than 8 inches. Care will be taken to ensure that fill materials are not frozen during placement or compaction. Any areas that are damaged by freezing will be reconditioned, reshaped, and recompacted to at least 85 percent of maximum Proctor density. All fill placement and compaction activities will be overseen by an experienced engineer.

Previous (pre-SMCRA) mining in the area has resulted in the exposure of coal outcrops incident to mining activities. All coal outcrops within the proposed disturbed area will be covered with at least 4 feet of soil during reclamation. Asphalt materials which are removed from site surfaces will also be covered with at least 4 feet of soil during reclamation. In general, grading and backfilling operations

will proceed from the upstream end of the surface facilities to the downstream end, thus allowing the sedimentation pond and sediment traps to remain effective for as long as possible.

At the Pace Canyon Fan Portal facilities the gravel associated with sediment control of the site will be placed in the shaft for disposal during reclamation of the site. The Hilfiker wall will be constructed using on-site material. Soil at the site will be screened to collect rock which will be used to fill the wall. During reclamation the steel mesh used to build the wall will be recycled or placed into the shaft during backfilling. The rock and soil used to build the will be used as fill during reclamation.

Construction of Reclamation Channels. Reclamation channels will be constructed at the locations shown on Plate 5-5 for the Dugout Canyon facility and Plate PC7-7 in Appendix 7-12 for the Pace Canyon Fan Portal Site. These channels will be constructed to capture runoff from undisturbed areas and convey this runoff to and through Dugout Creek or Pace Creek. Details regarding the design and construction of these channels are provided in Section 760 of this M&RP.

As noted on Plate 5-5, slopes adjacent to the reclaimed Dugout Creek have typically been designed with a grade of 2H:1V. These slopes are generally shallower than the natural slopes adjacent to the creek both up- and downstream from the disturbed area (where natural slopes on the hillsides adjacent to the stream are typically 1.5H:1V or steeper). Hence, access to the stream by wildlife and livestock under post-mining conditions should not be hindered within the reclaimed area.

Attempts to reduce the post-reclamation slopes entering the steam channel were not fruitful since reducing the slopes would result in increased cut quantities which would require off-site disposal. Furthermore, since the reclaimed slopes will generally be less than the natural slopes both up- and downstream from the disturbed area, a further reduction was not considered necessary to support post-mining wildlife and livestock usage of the area.

Sedimentation Pond Removal and Interim Sediment Control. Prior to the start of reclamation activities, temporary silt fences will be emplaced in the stream channel perpendicular to the flow direction in accordance with Figure 5-4. A minimum of four such silt fences will be installed in the

creek downstream from the by-pass culvert (UC-5) outlet but within the disturbed area prior to removal of the culvert. The downstream-most silt fence will be installed in the stream at the downstream end of the disturbed-area boundary, downstream from the location of the energy dissipater. The silt fences will be located in an area convenient for maintenance and cleanout. The silt fences will be removed when reclamation construction activities are completed. During reclamation activities, the silt fences will be periodically inspected and accumulated sediment will be removed from behind the silt fences when required to minimize downstream impacts.

The sedimentation pond and sediment trap in Pace Canyon will be retained for as long as practical during reclamation. Once backfilling and grading operations proceed to the location of the pond, it will be removed. Because the pond is designed primarily as an excavated structure, removal of the pond will consist primarily of backfilling. This removal will be accomplished using backhoes, loaders, dozers, and other appropriate earthmoving equipment.

As soon as regrading of an area no longer allows that area to drain to the sedimentation pond or sediment trap, silt fences will be installed along the base of the slopes adjacent to Dugout Creek and Pace Creek and its tributaries to control erosion on an interim basis prior to revegetation success. These silt fences will be installed using a supportive backing and burying the toe of the filter fabric as noted in Figure 5-4.

On a temporary basis, straw-bale dikes may also be installed as necessary to control localized erosion prior to the establishment of revegetation efforts. If installed, locations of the straw-bale dikes will be selected to reduce sediment contributions to runoff based on field observations. Straw-bale dikes will be installed by keying the bales into the ground as noted in Figure 5-4.

542.300 Final Surface Configuration Maps and Cross Sections

Final surface configuration maps and cross sections for the Dugout Canyon site are provided on Plates 5-5 and 5-6, respectively. The final surface configuration map and cross sections for the Pace Canyon Fan Portal Site can be found on Plate PC5-5 in Appendix 5-10. Roads which access the

private lands within the permit area will remain following reclamation, including the public (County) road(s). No other facilities related to the coal mining operations will remain in the permit area following reclamation.

542.400 Removal of Temporary Structures

All surface structures associated with the mining operation will be removed as outlined in Section 542.200. A description ensuring that all structures and the sedimentation pond have been removed will be provided to the Division before seeking bond release or abandoning the permit area.

542.500 Removal of Sedimentation Pond

Information regarding removal of the sedimentation pond associated with the Dugout Canyon Mine is provided in Section 542.200. The timetable for removal of this pond is indicted in Figure 5-3.

542.600 Roads

All roads not to be retained for an approved post-mining land use will be reclaimed immediately after they are no longer needed for mining and reclamation operations. Roads which will be retained through the disturbed area for access to private land within the permit area are noted on Plate 5-5 and on Plate PC5-5 in Appendix 5-10. All remaining roads within the disturbed area will be reclaimed.

In all cases (whether the road is to be retained for a post-mining land use or not), all asphalt or concrete surfaces will be removed from the roads during reclamation. The retained roads will then be regraded to drain to the downslope side of the road. The road surface materials will be buried on site beneath at least 4 feet of non-acid and non-toxic forming materials. All roads to be reclaimed will be graded and/or backfilled as indicated above. Topsoil will be applied to the regraded surfaces and the area will be revegetated as discussed in Chapters 2 and 3, respectively.

Roads within the disturbed area have been designed with a width of 16 to 20 feet (see Section 527.200). The main canyon access road up- and downstream from the proposed disturbed area has a current width which generally ranges from 16 to 25 feet, averaging approximately 20 feet. Hence, post-reclamation retention of a road with a width of 16 to 20 feet will be compatible with adjacent roads, including those roads upstream from the disturbed area which will not be altered by mining activities. Therefore, this road width is considered appropriate for the post-mining land use.

542.700 Final Abandonment of Mine Openings and Disposal Areas

Abandonment of Openings. All mine openings (including Pace Canyon portal) will be sealed at least 25 feet inside the mine opening. Prior to installation of the seal, all loose material will be removed from the roof, floor, and rib of the mine within 3 feet of the seal area. The seal will then be constructed using solid concrete blocks (average minimum compressive strength of 1,800 psi) with nominal dimensions of 6 inches high, 8 inches wide, and 16 inches long. Mortar will consist of one part cement, three parts sand, and no more than 7 gallons of water per sack of cement.

The seal will be recessed at least 16 inches deep into each rib and 12 inches deep into the floor. No recess will be made into the roof. In the bottom course, each block will be laid with its long axis parallel to the rib. The long axis in succeedingly higher courses will be perpendicular to the long axis of the blocks in the preceding course. An interlaced pilaster will be constructed in the center.

The seals will have a thickness of approximately 16 inches. Following seal construction, the entries will be backfilled from the seal to the outside surface with soil that is sloped at the surface to match the final slope at the entry. The soil will then be raked and revegetated with the approved seed mixture (see Chapter 3).

Alternatively, a cast-in-place MSHA approved seal will be installed with a minimum thickness of 3 feet and with a minimum compressive strength of 200 psi.

Disposal of Excess Spoil. No excess spoil will be generated in the permit area.

Disposal of Coal Mine Waste. All coal mine waste generated at the Dugout Canyon Mine will be disposed of either underground or at the waste-rock disposal sites associated with the Dugout Canyon Mine (Refuse Pile Amendment, February 2003), SUFCo and/or Skyline Mines. Coal mine waste that is temporarily stored on the surface at the Dugout Canyon Mine prior to off-site disposal will be removed from the Dugout Canyon Mine prior to reclamation. Information regarding disposal practices and reclamation plans for these off-site disposal facilities is provided in their respective M&RPs.

Disposal of Non-Coal Mine Wastes. All non-coal (non-waste rock) waste generated from mining and reclamation operations will be disposed of as outlined in Sections 526.100 and 528.300. Following cessation of mining activities, non-coal mine waste that is still temporarily stored at the site will be removed and disposed of as outlined in Section 528.300. Non-coal waste that is generated during the course of reclamation that cannot be salvaged will be disposed of at an off-site permitted facility.

542.800 Estimated Cost of Reclamation

The existing bond, together with the estimated cost to reclaim the Dugout Canyon Mine surface facilities as modified by this submittal, is provided in Appendix 5-6.

550 RECLAMATION DESIGN CRITERIA AND PLANS

551 Casing and Sealing of Underground Openings

Each underground opening to the mine will be sealed and backfilled when no longer needed for monitoring or other use approved by the Division upon a finding of no adverse environmental or health and safety effects. Permanent closure measures will be as described in Section 542.700.

This closure method has been designed to prevent access to the mine workings by people, livestock, fish and wildlife, and machinery. The closures have also been designed to keep water from flowing from the mine workings to prevent acid or other toxic drainage from entering ground and surface waters.

Monitoring wells associated with the Dugout Canyon Mine will be sealed when no longer needed for monitoring groundwater. Sealing of these wells will occur in accordance with the requirements of the Utah Division of Water Rights (R655-4-12).

552 Permanent Features

552.100 Small Depressions

During final grading and spreading of topsoil, small depressions will be left in the soil. The purpose of these depressions will be to retain moisture, minimize erosion, and assist in revegetation of the site.

552.200 Permanent Impoundments

No permanent impoundments will be left following reclamation.

553 Backfilling and Grading

Plans for backfilling and grading of the site upon reclamation have been presented in Section 542.200. This plan was designed to comply with the applicable requirements of R645-301-500 and R645-301-700. As indicated in Section 542.200, backfilling and grading operations will be conducted in a controlled manner.

553.100 Disturbed Area Backfilling and Grading

Approximate Original Contour. As indicated in Section 521.100 of this M&RP, the area of the proposed Dugout Canyon surface facilities was disturbed by previous mining activities. No pre-mining topographic maps of the area are known to exist. The reclamation plan has been designed to allow that the site will be backfilled and graded to achieve the assumed approximate original contour (i.e., to blend into the surrounding topography) and eliminate existing highwalls.

As with the Dugout Canyon site the Pace Canyon site had been previously disturbed by mining activities and road construction. Maps showing this area prior to disturbance do not exist. The reclamation plan has been prepared to achieve the assumed approximate original contour and eliminate any highwalls and cutslopes.

Elimination of Highwalls, Spoil Piles, and Depressions. The backfilling and grading plans have been designed to eliminate highwalls at the sites. No spoil piles exist. With the exception of the small depressions discussed in Section 552.100, no depressions will remain at the site following reclamation.

Slope Stability. Backfilled and regraded slopes have been designed to not exceed the angle of repose (determined in Appendix 5-4 to be a slope of 1.5H:1V). At this slope, final reclamation slopes have been designed with a minimum static safety factor of 2.6 (see Appendix 5-4). The static safety factor increases with decreasing slope. Furthermore, as indicated in Appendix 5-4, the highest reclamation slope at the site (cross section R-R', as indicated on Plate 5-6) will also have a minimum safety factor of 2.6. The slopes have thus been designed to prevent slides.

In Pace Canyon reclaimed slopes will be at a 2H:1V slope or less over most of the site. However, there will be some small areas where the slope may be up to 1.6H:1V . This will only occur in areas where the reclaimed surface ties into an undisturbed area with a slope greater than 2H:1V.

Erosion and Water Pollution. Temporary sediment-control measures will be implemented during and following backfilling and regrading as outlined in Section 542.200 and Section 244 of this M&RP. As vegetation becomes established on the reclaimed surfaces, erosion potentials will be further minimized. By minimizing erosion, water pollution will also be precluded. Additional water-quality concerns do not exist at the site (see Chapter 7).

In an effort to eliminate pre-existing highwalls at the Dugout Canyon site following reclamation, soil may be replaced during reclamation at slopes of up to 1.5H:1V. The steepness of these slopes will be reduced at their base, providing a concave slope. As noted above, these slopes will be geotechnically stable. Dozers will be used during placement of the topsoil or substitute topsoil on these steep slopes, taking care to achieve a reasonably uniform thickness of the final soil cover. Following placement and prior to seeding, all areas with a slope steepness of 3H:1V or steeper will be deep gouged using a trackhoe. The final surface will consist of mounds and depressions capable of holding runoff and difficult to walk on. Refer to Sections 355 and 341 regarding erosion-control matting and revegetation.

Although the gouging will extend below the depth of the final topsoil layer, information presented in Section 222.400 of this M&RP indicates that the subsoils will be of acceptable chemical and physical quality, with the possible exception of the percentage of rock fragments. Hence, the surface will still be capable of sustaining an adequate vegetative cover, further minimizing long-term erosion of the slopes.

Post-Mining Land Use. The disturbed area will be backfilled and regraded in a manner that supports the approved post-mining land use.

553.200 Spoil and Waste

Spoil. No spoil will be generated within the permit area.

Refuse Piles. Details regarding the design, operation, final surface configuration, and final grading of the waste-rock disposal sites at the Dugout Canyon Mine, SUFCo and Skyline Mines are provided in their respective M&RPs. Refuse generated from the Dugout Canyon Mine will be disposed of only at sites that have been approved to accept material from the mine.

Coal Processing Waste. No coal processing waste will be generated within the permit area.

553.300 Exposed Coal Seams, Acid- and Toxic-Forming Materials, and Combustible Materials

Exposed Coal Seams. All coal outcrops within the proposed disturbed area will be covered with a minimum of 4 feet of nontoxic and noncombustible materials during final backfilling and grading. This cover material may consist of material removed during grading of the site (see Section 542.200), subsoil, and/or topsoil.

Acid- and Toxic-Forming Materials. No acid- or toxic-forming materials exist at the site (see Section 528.300).

Combustible Materials. All combustible materials that are exposed, used, or produced during mining will be disposed of off site as outlined in Section 526.100.

553.400 Cut-and-Fill Terraces

No cut-and-fill terraces will be retained at the site following final grading activities.

553.500 Highwalls From Previously Mined Areas

Several highwalls currently exist within the proposed disturbed area that are the result of previous mining operations. The reclamation plan has been designed to eliminate these highwalls.

553.600 Previously Mined Areas

As noted previously, the reclamation plan has been designed to eliminate pre-existing highwalls within the disturbed area following reclamation. Section 542.200 of this M&RP indicates that the plan has been designed with a reasonable balance between cut and fill quantities. Section 553.100 indicates that slopes of up to 1.5H:1V may be required to eliminate the highwalls. The steepness of these slopes will be reduced at the base to provide a concave profile. According to Appendix 5-4, these slopes will be geotechnically stable. Procedures to minimize erosion on these reclamation slopes are discussed in Section 553.100.

The anticipated post-mining contours noted on Plate 5-5 and Plate PC5-5 in Appendix 5-10 indicate that the available materials are sufficient to eliminate all existing highwalls within the disturbed-area boundary during reclamation. However, if field conditions indicate that all available materials are not sufficient to eliminate the existing highwalls without exceeding the performance criteria outlined in the preceding paragraph, small sections of highwall may be retained. Division approval will be obtained before any highwalls are retained. If it is necessary to retain any existing highwalls at the site, analyses will be performed to show that the retained highwalls are stable and compatible with the postmining land use. Specifically, this analysis will address the requirements of Sections R645-301-553.600 through R645-301-553.650 of the regulations.

553.700 Backfilling and Grading - Thin Overburden

No surface coal mining and reclamation activities involving thin overburden will occur within the permit area.

553.800 Backfilling and Grading - Thick Overburden

No surface coal mining and reclamation activities involving thick overburden will occur within the permit area.

553.900 Regrading of Settled and Revegetated Fills

As indicated in Section 537.200 of this M&RP, all settled and revegetated fills which currently exist within the proposed disturbed area due to historic mining in the area will be regraded during site construction activities. No plan is presented in this M&RP to retain these settled and regraded fills following reclamation.

560 PERFORMANCE STANDARDS

Coal mining and reclamation operations at the Dugout Canyon Mine will be conducted in accordance with the approved permit and the requirements of R645-301-510 through R645-301-553.

REFERENCES:

Brough, R.C., D.L. Jones, D.J. Stevens, and D.R. James. 1987. Utah's Comprehensive Weather Almanac. Publishers Press. Salt Lake City, Utah.

Dunrud, C.R. 1976. Some Engineering Geologic Factors Controlling Coal Mine Subsidence in Utah and Colorado. U.S. Geological Survey Professional Paper 969. U.S. Government Printing Office. Washington, D.C.

Gentry, D.W. and J.F. Abel, Jr. 1978. Rock Mass Response to Mining Longwall Panel 4N, York Canyon Mine. Mining Engineering. pp. 273-280.

Leatherwood, J. and D. Duce. 1988. Guidelines for Management of Topsoil and Overburden for Underground and Surface Coal Mining. Utah Division of Oil, Gas and Mining. Salt Lake City, Utah.

von Schonfeldt, H., F.D. Wright, and K.F. Unrug. 1980. Subsidence and Its Effect on Longwall Mine Design. Mining Congress Journal. pp. 41-53.

TABLES AND FIGURES

TABLE 5-1

LIST OF MAJOR EQUIPMENT

Continuous Miners	Continuous Haulage Systems	Shuttle Cars (Diesel and Electric)
Longwall Shearer, Shields	Stage Loader, Crusher	Face Conveyor
Roof Bolters	Feeder Breakers	Personnel Carriers
Load-Haul-Dumps and Accessories	Auxiliary Underground Mobile Equipment (Maintenance Trucks, Ambulance, Utility Trucks, Lubrication Truck)	Surface Mobile Equipment (Dozers, Forklifts, Loaders, Snow Plow)
Conveyor System	Power Centers	Rock Dusting Equipment
Pumps (Slurry and Submersible)	Underground Trailers	Licensed Highway Vehicles
Compressors and Generators	Electrical Substations and Transformers	Miscellaneous Tools
General Mine Equipment (Lighting Systems, Emergency Communication System, Auxiliary Fan)	Fire fighting Tools and Fire Extinguishers	Conveyor Fire Suppression Sprays
Health and Safety Equipment (Dust Sampler, Methane Detection, Self Rescuers, Self-Contained Underground Breathing Apparatus, Flame Safety Lamps, Atmosphere Analyzer)	Other Improvements (Fans, Water System, Retaining Walls, Drainage System, Fencing, Asphalt Paving)	

INCORPORATED
EFFECTIVE:
MAR 3 1 2003
99D
UTAH DIVISION OIL, GAS AND MINING

TABLE 5-2

SUBSIDENCE CONTROL POINT SURVEY DATA*

STATION NAME	NORTHING	EASTING	PIN ELEVATION
Sage	498254.15	2257232.34	8467.62
Sage, Az.	497324.93	2256623.81	8422.66
Francis	496611.07	2264094.03	8544.89
Skaggs	505868.76	2269371.61	8837.05
McFarlen	489283.24	2272314.34	8317.79
Soldier	498530.39	2281585.15	9053.75
Sublett	487882.23	2256822.75	6757.00
Mosca	494899.03	2258577.93	7303.60
Oslund	492074.41	2259135.38	7767.77
Durrett	490307.50	2262347.14	7474.79
Semborski	489694.42	2268293.47	7818.22
Streeter	493114.47	2264816.93	8239.50
Doney	494159.83	2267719.90	8096.61
Ogden	496576.39	2270095.01	7811.33
Presset	493596.17	2269951.00	7544.26
Chi	492119.67	2268718.50	7142.70
Reynoso	492837.37	2268611.30	7185.10
Palmer	488120.29	2266987.04	7712.80
3045	499635.34	2254210.70	8170.10
3048	500395.85	2264658.31	8419.59
3049	499585.59	2267096.57	8418.76
3052	491499.67	2276901.14	8455.63
3061	504632.44	2271891.63	8856.88

* Additional survey points are reported each year in the Annual Reports.

TABLE 5-3

Mine Road Specifications

Road Name[a]	Classification	Approx.Width (ft)	Approx. Gradient (%)	Road Surface	Slope (H:V)[b]		Drainage Structures
					Cut	Fill	
Primary haul road	Primary	25-30	7	Crushed rock, asphalt, or concrete	None	None	See Plate 7-5
Coal storage pad road	Primary	30-35	14		2:1	3:1	
Substation access road	Primary	14-18	13		0.5:1[c]	1.5:1[d]	
Portal pad access road	Primary	25-30	13		1.5:1	2:1	
Water tank access road	Primary	14-20	16-25	Dirt	1:1[e]	1.5:1[e]	
Survey monument access road	Ancillary	8-12	15-20	Dirt	0.5:1[e]	1:1[e]	

(a) See Plate 5-2 for location.
(b) New cuts and fills, except as noted
(c) In rock. Cut slopes in soil to be approximately 1.5:1.
(d) Vertical fill slopes will occur along the upper portion of the road where support by a retaining wall.
(e) Typical

INCORPORATED
EFFECTIVE
MAR 31 2000
Utah Division Oil, Gas And Mining

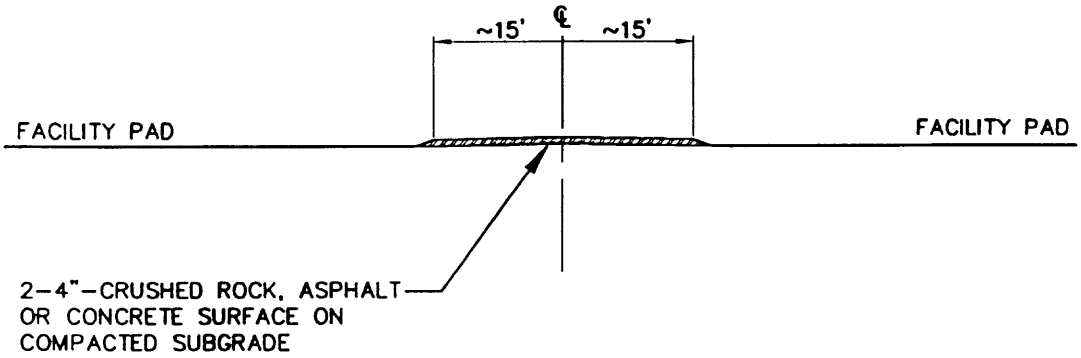

PRIMARY HAUL ROAD-TYPICAL SECTION

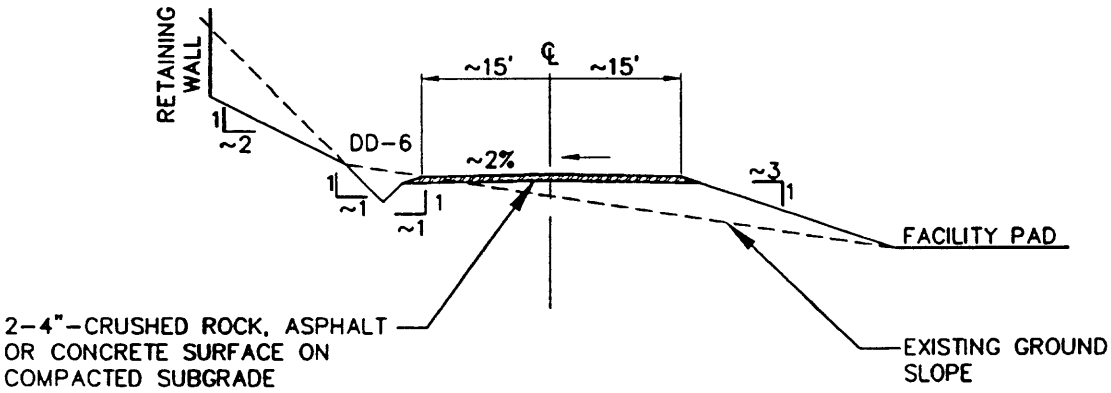

COAL STORAGE PAD ROAD-TYPICAL SECTION

REGISTERED PROFESSIONAL ENGINEER
No. 168246
RICHARD B. WHITE
9/11/98
STATE OF UTAH

FIGURE 5-1. TYPICAL ROAD CROSS SECTIONS (1 OF 3)

EarthFax

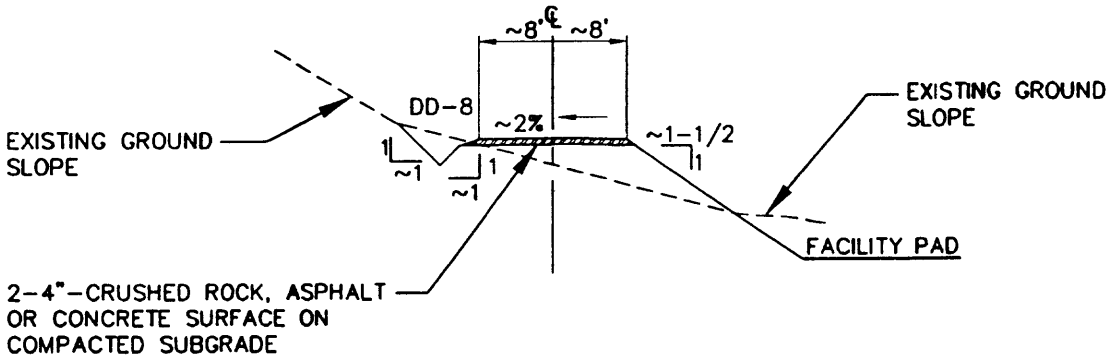

SUBSTATION ACESS ROAD-TYPICAL SECTION

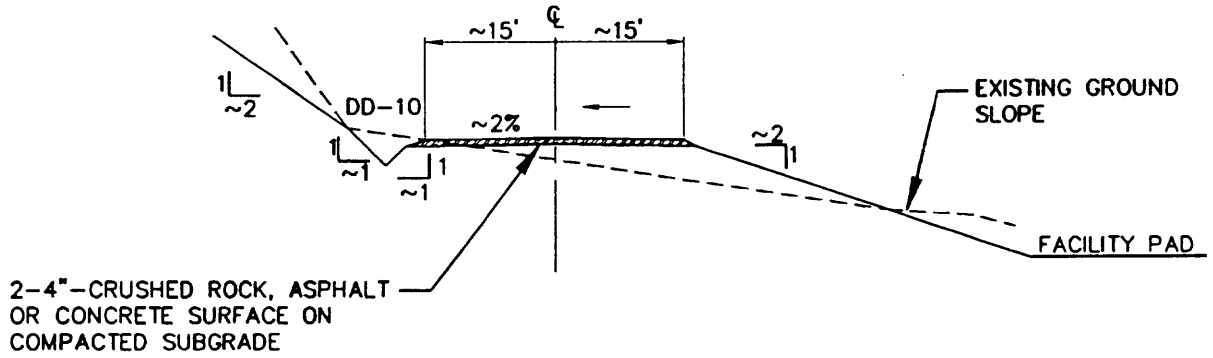

PORTAL PAD ACCESS ROAD-TYPICAL SECTION

REGISTERED PROFESSIONAL ENGINEER
No. 168246
RICHARD B. WHITE
9/11/98
STATE OF UTAH

FIGURE 5-1. TYPICAL ROAD CROSS SECTIONS (2 OF 3)

EarthFax

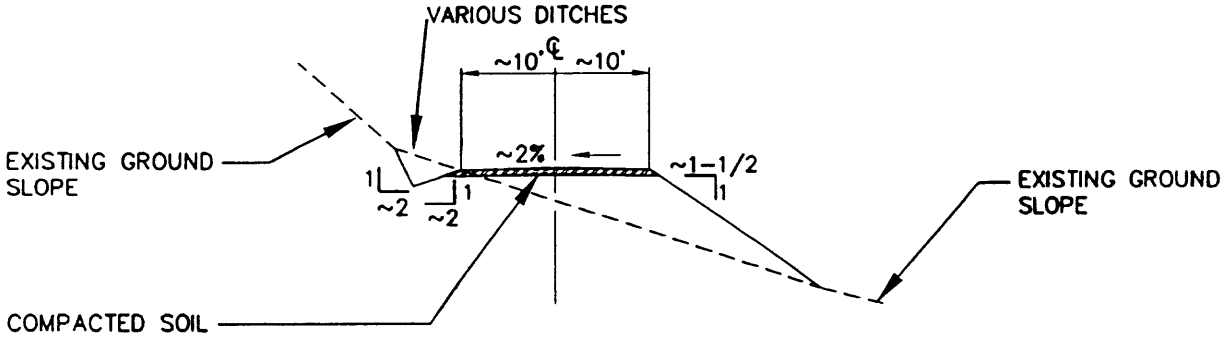

WATER TANK ACCESS ROAD-TYPICAL SECTION

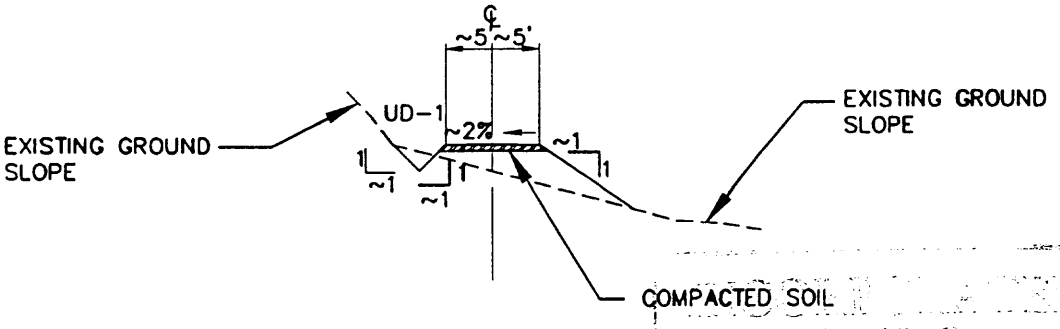

SURVEY MONUMENT ACCESS ROAD-TYPICAL SECTION

EFFECTIVE:
OCT 19 1998
98-1

REGISTERED PROFESSIONAL ENGINEER
No. 168246
RICHARD B. WHITE
9/11/98
STATE OF UTAH

FIGURE 5-1. TYPICAL ROAD CROSS SECTIONS (3 OF 3)

EarthFax

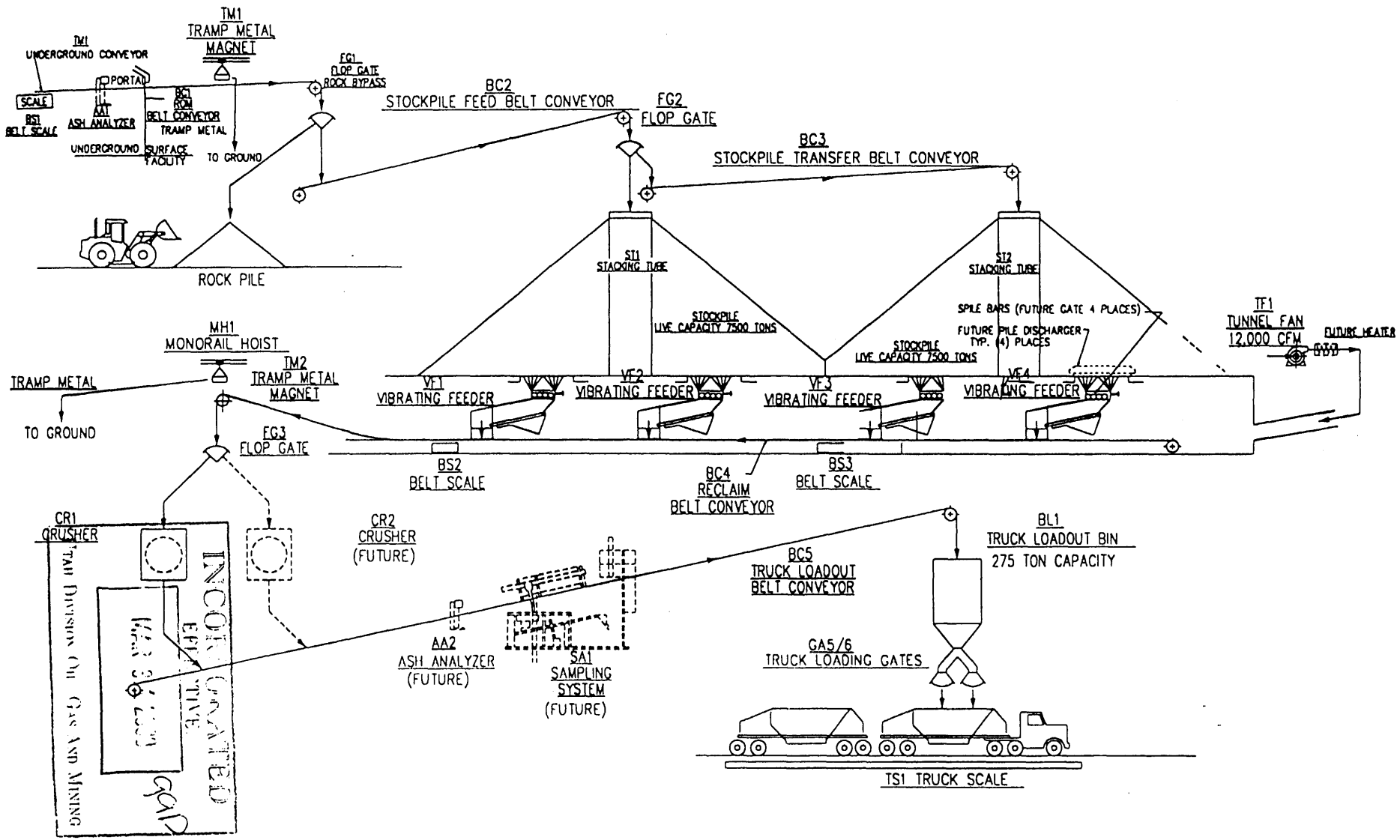

FIGURE 5-2 MATERIAL FLOW DIAGRAM

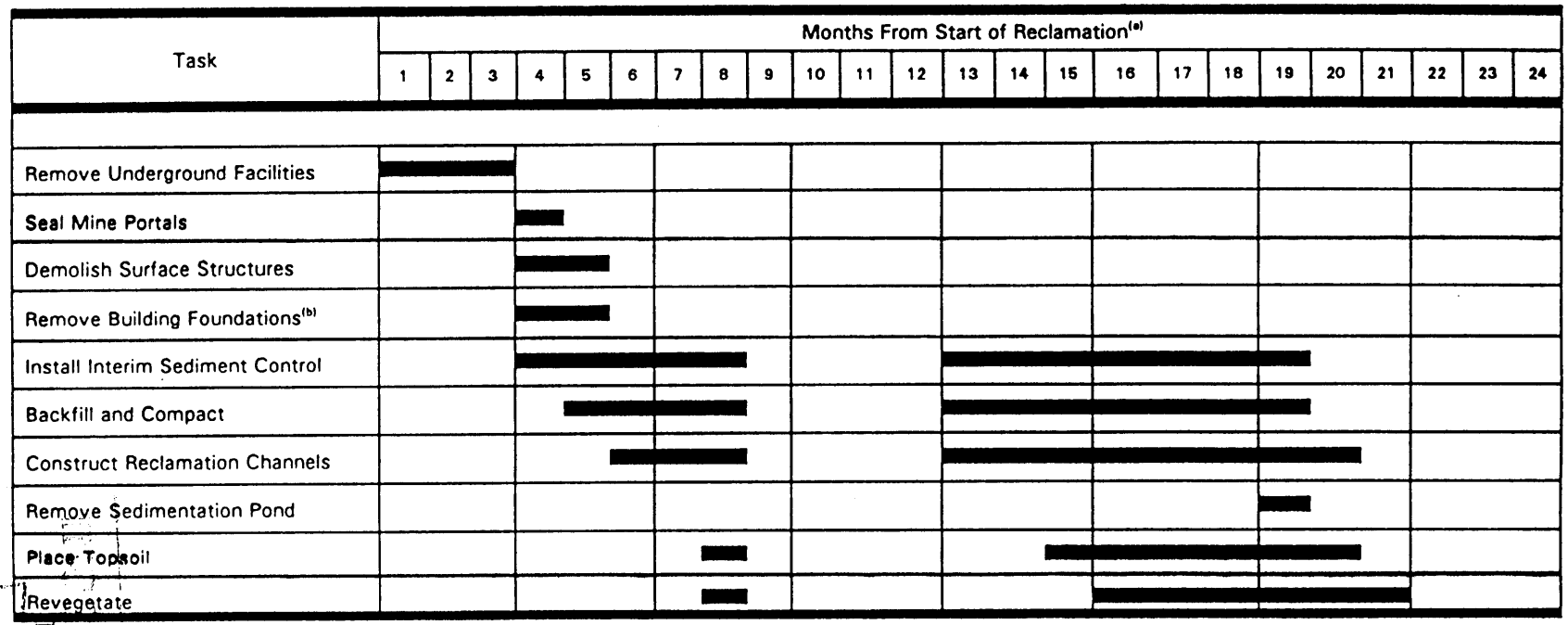

[a] Schedule assumes that weather conditions are conducive to reclamation activities

[b] As necessary

FIGURE 5-3. RECLAMATION TIMETABLE

OCT 19 1998
EarthFax

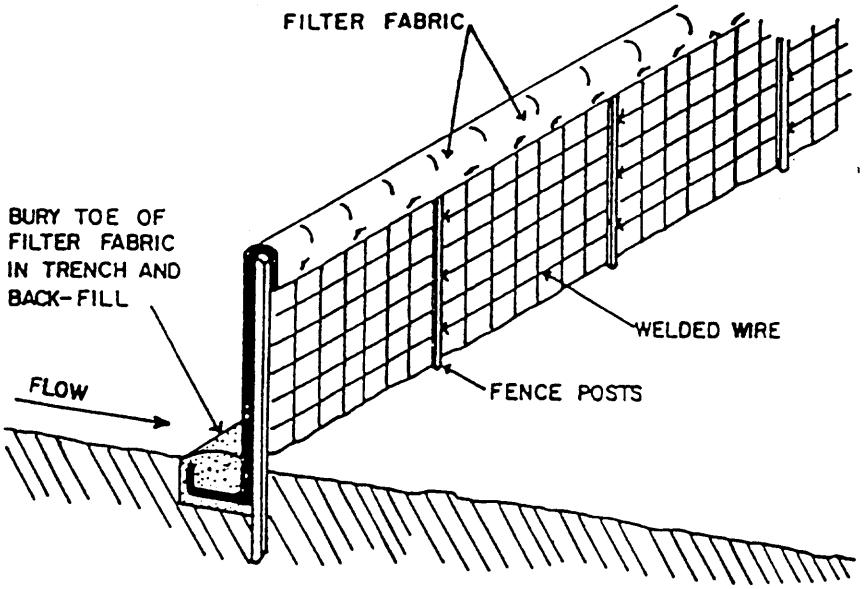

SILT FENCE

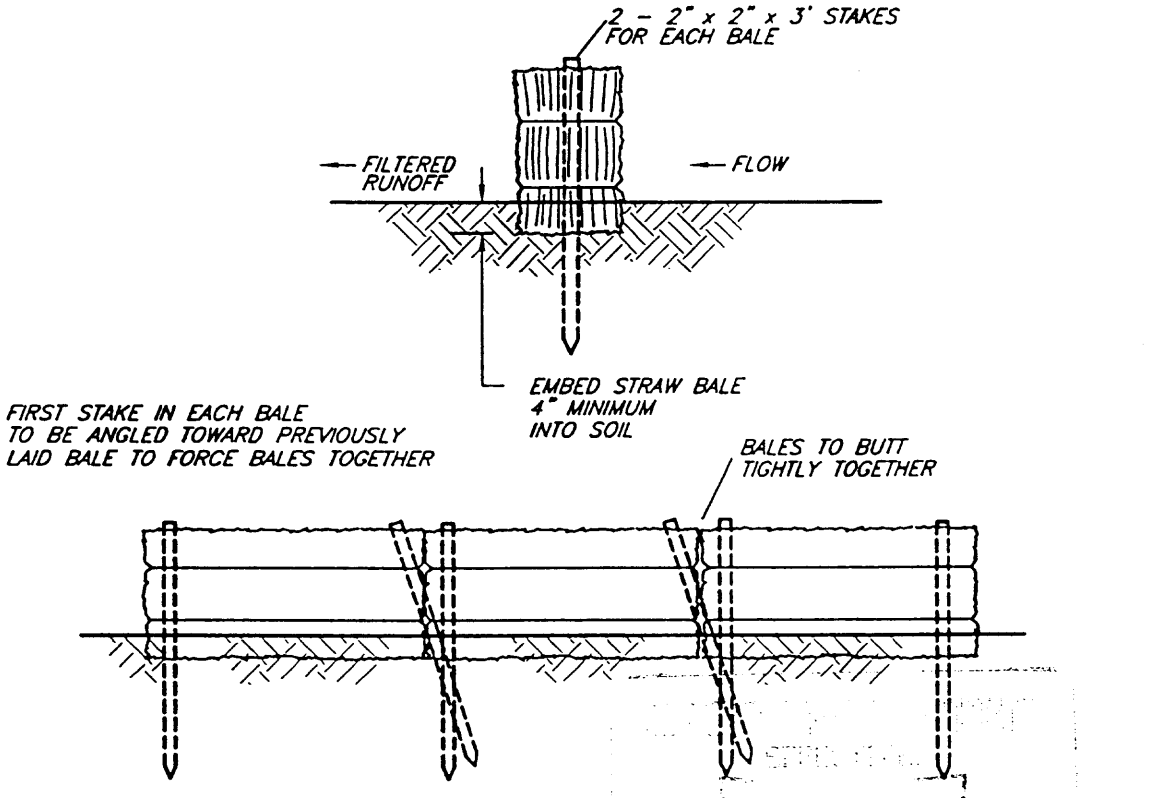

STRAW-BALE DIKE

OCT 19 1998

SOURCE: Barfield, et al. (1981)
McCULLAH (1994)

FIGURE 5-4. SILT FENCE AND STRAW-BALE DIKE SCHEMATICS

APPENDIX 5-6

Reclamation Bond Estimate

Bonding Calculations

Direct Costs

Subtotal Demolition and Removal	$862,899.00	
Subtotal Backfilling and Grading	$551,461.00	
Subtotal Revegetation	$383,995.00	
Direct Costs	$1,798,355.00	
Indirect Costs		
Mob/Demob	$179,836.00	10.0%
Contingency	$89,918.00	5.0%
Engineering Redesign	$44,959.00	2.5%
Main Office Expense	$122,288.00	6.8%
Project Mainagement Fee	$44,959.00	2.5%
Subtotal Indirect Costs	$481,960.00	26.8%
Total Cost	$2,280,315.00	
Escalation factor		0.0259
Number of years		2
Escalation	$119,650.00	
Reclamation Cost Escalated	$2,399,965.00	
Bond Amount (rounded to nearest $1,000)	$2,400,000.00	
2005 Dollars		

Ref.	Description	Materials	Means Reference Number	Unit Cost	Unit	Length	Width	Height	Diameter	Area	Volume	Weight	Density	Time	Number	Unit	Swell Factor	Quantity	Unit	Cost
	Mine Belt BC-1 No 1																			15493
	Transfer Building No 2																			27938
	Feed Belt BC 2 No3																			10946
	Stack Tubes 2 No4																			3175
	Head House 1 No 5																			5248
	Transfer Belt BC 2 No 6																			6987
	Head House 2 No 7																			1359
	Reclaim Tunnel No 8																			29096
	Reclaim Belt BC 4 No 9																			9755
	Escape Tunnel 60 inch No 10																			780
	Crusher Building No 11																			25336
	Truck Loadout Belt BC 5 No 12																			7956
	Truck Loudout and Scale No 13																			20800
	Bathhouse No 14																			111344
	Substation No 15																			1489
	Power Lines and Poles No 16																			1958
	Retaining Wall No 17																			603
	Gabion Wall No 18																			57513
	Pump House No 19																			2315
	Paved Road No 20																			56520
	Stream Culvert 72 inch No 21																			45027
	Water Tanks No 22																			2899
	Rock Dust Bin No 23																			915
	Fuel Tank and Fuel Station No 24																			1336
	Holding Tank No 25																			318
	Ventilation Fan No 26																			1842
	Magnet 27																			434
	Water System 28																			71041
	Sewage System 29																			23808
	Item 30 removed																			
	Storage Containers 31																			7560
	Gilson Well No 32																			1294
	Shop Building No 33																			4014
	Switch House No 34																			989
	Portals No 35																			26000
	Storage Building No 36																			1531
	Sampling System No 37																			1260
	Degas Well G4 No 38																			7609
	Degas Well G2 No 39																			18840
	Degas Well G3 No 40																			13095
	Stoker Storage Bin No 41																			711
	Substation No 2 No 42																			2194
	Gabion Baskets No 43																			970
	Methane Degas Wells 45																			147892
	Degas Well G 6 MW 06																			9897
	Degas Well G 5 MW 05																			10291
	Pace Fan Culvert																			1246
	Pace Fan Generator																			48785
	Pace Fan Portal																			5200
	Refuse Site No 44																			9490
	Total																			

Ref.	Description	Materials	Means Reference Number	Unit Cost	Unit	Length	Width	Height	Diameter	Area	Volume	Weight	Density	Time	Number	Unit	Swell Factor	Quantity	Unit	Cost
	Mine Belt BC-1 No 1																			
	Structure's Demolition Cost	Steel Bld. Large	02220 110 0012	0.2	/CF						62800					CF		62800	CF	12560
	Structure's Vol. Demolished																0.35	814	CY	
	Rubble's Weight (exclude steel)																			
	Truck's Capacity																			
	Haulage																			
	Transportation Cost Non Steel Truck																			
	Transportation Cost Non Steel Drive																			
	Disposal Cost Non Steel																			
	Steel's Weight											52				TON		52	TON	
	Truck's Capacity																			
	Haulage																			
	Transportation Cost Steel Truck	Truck dump 16 ton payload	01590 200 5300	435.96	/day									3.3		DAY		3.3	DAY	1439
	Transportation Cost Steel Truck Drive	Truck Driver, Heavy	Trhv	$42.00	HR									26		HR		26	HR	1092
	Disposal Cost Steel																			
	[illegible]																			[illegible]
	Equipment 's Disposal Cost																			
	Dismantling Cost																			
	Equipment 's Vol. Demolished																			
	Loading Costs																			
	Transport Costs																			
	Disposal Costs																			
	[illegible]																			
	Concrete Demolition																			
	Demolition Cost	Concrete demolition	ConcreteDemo1	3.97	/CY						20					CY		20	CY	79
	Concrete's Vol. Demolished																1.3	26	CY	
	Loading Cost	Front end loader 3 CY	02315 424 1300	1.39	/CY													26	CY	36
	Transportation Cost	12 CY (16 Ton) Dump Truck 1/2 mi. md. tri	02315 490 0320	3.44	/CY													26	CY	89
	Disposal Costs	On site disposal	02220 240 5550	7.6	/CY													26	CY	198
	[illegible]																			[illegible]
	Concrete Demolition																			
	Demolition Cost																			
	Concrete's Vol. Demolished																			
	Loading Cost																			
	Transportation Cost																			
	Disposal Costs																			
	[illegible]																			
	Concrete Demolition																			
	Demolition Cost																			
	Concrete's Vol. Demolished																			
	Loading Cost																			
	Transportation Cost																			
	Disposal Costs																			
	[illegible]																			
	Total																			[illegible]

Ref.	Description	Materials	Means Reference Number	Unit Cost	Unit	Length	Width	Height	Diameter	Area	Volume	Weight	Density	Time	Number	Unit	Swell Factor	Quantity	Unit	Cost
	Transfer Building No 2																			
	Structure's Demolition Cost	Steel Bld. Large	02220 110 0012	0.2	/CF						104618					CF		104618	CF	20924
	Structure's Vol. Demolished																0.35	1356	CY	
	Rubble's Weight (exclude steel)																			
	Truck's Capacity																			
	Haulage																			
	Transportation Cost Non Steel Truck																			
	Transportation Cost Non Steel Drive																			
	Disposal Cost Non Steel																			
	Steel's Weight											50				TON		50	TON	
	Truck's Capacity																			
	Haulage																			
	Transportation Cost Steel Truck	Truck dump 16 ton payload	01590 200 5300	435.96	/day									3.1		DAY		3.1	DAY	1351
	Transportation Cost Steel Truck Drive	Truck Driver, Heavy	Trhv	$42.00	HR									25		HR		25	HR	1050
	Disposal Cost Steel																			
	Subtotal																			[illegible]
	Equipment 's Disposal Cost																			
	Dismantling Cost																			
	Equipment 's Vol. Demolished																			
	Loading Costs																			
	Transport Costs																			
	Disposal Costs																			
	Subtotal																			
	Concrete Demolition																			
	Demolition Cost	Concrete demolition	ConcreteDemo1	3.97	/CY						229					CY		229	CY	909
	Concrete's Vol. Demolished																1.3	298	CY	
	Loading Cost	Front end loader 3 CY	02315 424 1300	1.39	/CY													298	CY	414
	Transportation Cost	12 CY (16 Ton) Dump Truck 1/2 mi. rnd. tri	02315 490 0320	3.44	/CY													298	CY	1025
	Disposal Costs	On site disposal	02220 240 5550	7.6	/CY													298	CY	2265
	Subtotal																			[illegible]
	Concrete Demolition																			
	Demolition Cost																			
	Concrete's Vol. Demolished																			
	Loading Cost																			
	Transportation Cost																			
	Disposal Costs																			
	Subtotal																			
	Concrete Demolition																			
	Demolition Cost																			
	Concrete's Vol. Demolished																			
	Loading Cost																			
	Transportation Cost																			
	Disposal Costs																			
	Subtotal																			

Ref.	Description	Materials	Means Reference Number	Unit Cost	Unit	Length	Width	Height	Diameter	Area	Volume	Weight	Density	Time	Number	Unit	Swell Factor	Quantity	Unit	Cost
	Feed Belt BC 2 No3																			
	Structure's Demolition Cost	Steel Bld. Large	02220 110 0012	0.2	/CF						47438					CF		47438	CF	9488
	Structure's Vol. Demolished																0.35	615	CY	
	Rubble's Weight (exclude steel)																			
	Truck's Capacity																			
	Haulage																			
	Transportation Cost Non Steel Truck																			
	Transportation Cost Non Steel Drive																			
	Disposal Cost Non Steel																			
	Steel's Weight											30				TON		30	TON	
	Truck's Capacity																			
	Haulage																			
	Transportation Cost Steel Truck	Truck dump 16 ton payload	01590 200 5300	435.96	/day									1.9		DAY		1.9	DAY	828
	Transportation Cost Steel Truck Drive	Truck Driver, Heavy	Trhv	$42.00	HR									15		HR		15	HR	630
	Disposal Cost Steel																			
	Subtotal																			10946
	Equipment 's Disposal Cost																			
	Dismantling Cost																			
	Equipment 's Vol. Demolished																			
	Loading Costs																			
	Transport Costs																			
	Disposal Costs																			
	Subtotal																			
	Concrete Demolition																			
	Demolition Cost																			
	Concrete's Vol. Demolished																			
	Loading Cost																			
	Transportation Cost																			
	Disposal Costs																			
	Subtotal																			
	Concrete Demolition																			
	Demolition Cost																			
	Concrete's Vol. Demolished																			
	Loading Cost																			
	Transportation Cost																			
	Disposal Costs																			
	Subtotal																			
	Concrete Demolition																			
	Demolition Cost																			
	Concrete's Vol. Demolished																			
	Loading Cost																			
	Transportation Cost																			
	Disposal Costs																			
	Subtotal																			
	Total																			10946

Ref.	Description	Materials	Means Reference Number	Unit Cost	Unit	Length	Width	Height	Diameter	Area	Volume	Weight	Density	Time	Number	Unit	Swell Factor	Quantity	Unit	Cost
	Stack Tubes 2 No4																			
	Structure's Demolition Cost																			
	Structure's Vol. Demolished																			
	Rubble's Weight (exclude steel)																			
	Truck's Capacity																			
	Haulage																			
	Transportation Cost Non Steel Truck																			
	Transportation Cost Non Steel Drive																			
	Disposal Cost Non Steel																			
	Steel's Weight																			
	Truck's Capacity																			
	Haulage																			
	Transportation Cost Steel Truck																			
	Transportation Cost Steel Truck Drive																			
	Disposal Cost Steel																			
	Subtotal																			
	Equipment 's Disposal Cost																			
	Dismantling Cost																			
	Equipment 's Vol. Demolished																			
	Loading Costs																			
	Transport Costs																			
	Disposal Costs																			
	Subtotal																			
	Concrete Demolition																			
	Demolition Cost	Concrete demolition	ConcreteDemo1	3.97	/CY						158					CY		158	CY	627
	Concrete's Vol. Demolished																1.3	205	CY	
	Loading Cost	Front end loader 3 CY	02315 424 1300	1.39	/CY													205	CY	285
	Transportation Cost	12 CY (16 Ton) Dump Truck 1/2 mi. md. tri	02315 490 0320	3.44	/CY													205	CY	705
	Disposal Costs	On site disposal	02220 240 5550	7.6	/CY													205	CY	1558
	Subtotal																			3175
	Concrete Demolition																			
	Demolition Cost																			
	Concrete's Vol. Demolished																			
	Loading Cost																			
	Transportation Cost																			
	Disposal Costs																			
	Subtotal																			
	Concrete Demolition																			
	Demolition Cost																			
	Concrete's Vol. Demolished																			
	Loading Cost																			
	Transportation Cost																			
	Disposal Costs																			
	Subtotal																			
	Total																			3175

Ref.	Description	Materials	Means Reference Number	Unit Cost	Unit	Length	Width	Height	Diameter	Area	Volume	Weight	Density	Time	Number	Unit	Swell Factor	Quantity	Unit	Cost
	Head House 1 No 5																			
	Structure's Demolition Cost	Steel Bld. Large	02220 110 0012	0.2	/CF						23878					CF		23878	CF	4776
	Structure's Vol. Demolished																0.35	310	CY	
	Rubble's Weight (exclude steel)																			
	Truck's Capacity																			
	Haulage																			
	Transportation Cost Non Steel Truck																			
	Transportation Cost Non Steel Drive																			
	Disposal Cost Non Steel																			
	Steel's Weight											10				TON		10	TON	
	Truck's Capacity																			
	Haulage																			
	Transportation Cost Steel Truck	Truck dump 16 ton payload	01590 200 5300	435.96	/day									0.6		DAY		0.6	DAY	262
	Transportation Cost Steel Truck Drive	Truck Driver, Heavy	Trhv	$42.00	HR									5		HR		5	HR	210
	Disposal Cost Steel																			
	[illegible]																			[illegible]248
	Equipment 's Disposal Cost																			
	Dismantling Cost																			
	Equipment 's Vol. Demolished																			
	Loading Costs																			
	Transport Costs																			
	Disposal Costs																			
	[illegible]																			
	Concrete Demolition																			
	Demolition Cost																			
	Concrete's Vol. Demolished																			
	Loading Cost																			
	Transportation Cost																			
	Disposal Costs																			
	[illegible]																			
	Concrete Demolition																			
	Demolition Cost																			
	Concrete's Vol. Demolished																			
	Loading Cost																			
	Transportation Cost																			
	Disposal Costs																			
	[illegible]																			
	Concrete Demolition																			
	Demolition Cost																			
	Concrete's Vol. Demolished																			
	Loading Cost																			
	Transportation Cost																			
	Disposal Costs																			
	[illegible]																			
	[illegible]																			

Ref.	Description	Materials	Means Reference Number	Unit Cost	Unit	Length	Width	Height	Diameter	Area	Volume	Weight	Density	Time	Number	Unit	Swell Factor	Quantity	Unit	Cost
	Transfer Belt BC 2 No 6																			
	Structure's Demolition Cost	Steel Bld. Large	02220 110 0012	0.2	/CF						30000					CF		30000	CF	6000
	Structure's Vol. Demolished																0.35	389	CY	
	Rubble's Weight (exclude steel)																			
	Truck's Capacity																			
	Haulage																			
	Transportation Cost Non Steel Truck																			
	Transportation Cost Non Steel Drive																			
	Disposal Cost Non Steel																			
	Steel's Weight											20				TON		20	TON	
	Truck's Capacity																			
	Haulage																			
	Transportation Cost Steel Truck	Truck dump 16 ton payload	01590 200 5300	435.96	/day									1.3		DAY		1.3	DAY	567
	Transportation Cost Steel Truck Drive	Truck Driver, Heavy	Trhv	$42.00	HR									10		HR		10	HR	420
	Disposal Cost Steel																			
	Subtotal																			6987
	Equipment 's Disposal Cost																			
	Dismantling Cost																			
	Equipment 's Vol. Demolished																			
	Loading Costs																			
	Transport Costs																			
	Disposal Costs																			
	Subtotal																			
	Concrete Demolition																			
	Demolition Cost																			
	Concrete's Vol. Demolished																			
	Loading Cost																			
	Transportation Cost																			
	Disposal Costs																			
	Subtotal																			
	Concrete Demolition																			
	Demolition Cost																			
	Concrete's Vol. Demolished																			
	Loading Cost																			
	Transportation Cost																			
	Disposal Costs																			
	Subtotal																			
	Concrete Demolition																			
	Demolition Cost																			
	Concrete's Vol. Demolished																			
	Loading Cost																			
	Transportation Cost																			
	Disposal Costs																			
	Subtotal																			
	Total																			6987

Ref.	Description	Materials	Means Reference Number	Unit Cost	Unit	Length	Width	Height	Diameter	Area	Volume	Weight	Density	Time	Number	Unit	Swell Factor	Quantity	Unit	Cost
	Head House 2 No 7																			
	Structure's Demolition Cost	Steel Bld. Large	02220 110 0012	0.2	/CF						4436					CF		4436	CF	887
	Structure's Vol. Demolished																0.35	58	CY	
	Rubble's Weight (exclude steel)																			
	Truck's Capacity																			
	Haulage																			
	Transportation Cost Non Steel Truck																			
	Transportation Cost Non Steel Drive																			
	Disposal Cost Non Steel																			
	Steel's Weight											10				TON		10	TON	
	Truck's Capacity																			
	Haulage																			
	Transportation Cost Steel Truck	Truck dump 16 ton payload	01590 200 5300	435.96	/day									0.6		DAY		0.6	DAY	262
	Transportation Cost Steel Truck Drive	Truck Driver, Heavy	Trhv	$42.00	HR									5		HR		5	HR	210
	Disposal Cost Steel																			
	Subtotal																			1,306
	Equipment 's Disposal Cost																			
	Dismantling Cost																			
	Equipment 's Vol. Demolished																			
	Loading Costs																			
	Transport Costs																			
	Disposal Costs																			
	Subtotal																			
	Concrete Demolition																			
	Demolition Cost																			
	Concrete's Vol. Demolished																			
	Loading Cost																			
	Transportation Cost																			
	Disposal Costs																			
	Subtotal																			
	Concrete Demolition																			
	Demolition Cost																			
	Concrete's Vol. Demolished																			
	Loading Cost																			
	Transportation Cost																			
	Disposal Costs																			
	Subtotal																			
	Concrete Demolition																			
	Demolition Cost																			
	Concrete's Vol. Demolished																			
	Loading Cost																			
	Transportation Cost																			
	Disposal Costs																			
	Subtotal																			
	Total																			

Ref.	Description	Materials	Means Reference Number	Unit Cost	Unit	Length	Width	Height	Diameter	Area	Volume	Weight	Density	Time	Number	Unit	Swell Factor	Quantity	Unit	Cost
	Reclaim Tunnel No 8																			
	Structure's Demolition Cost	Steel Bld. Large	02220 110 0012	0.2	/CF						18774					CF		18774	CF	3755
	Structure's Vol. Demolished																0.35	243	CY	
	Rubble's Weight (exclude steel)																			
	Truck's Capacity																			
	Haulage																			
	Transportation Cost Non Steel Truck																			
	Transportation Cost Non Steel Drive																			
	Disposal Cost Non Steel																			
	Steel's Weight											32				TON		32	TON	
	Truck's Capacity																			
	Haulage																			
	Transportation Cost Steel Truck	Truck dump 16 ton payload	01590 200 5300	435.96	/day									2		DAY		2	DAY	872
	Transportation Cost Steel Truck Drive	Truck Driver, Heavy	Trhv	$42.00	HR									16		HR		16	HR	672
	Disposal Cost Steel																			
	Equipment 's Disposal Cost																			
	Dismantling Cost																			
	Equipment 's Vol. Demolished																			
	Loading Costs																			
	Transport Costs																			
	Disposal Costs																			
	Subtotal																			
	Concrete Demolition																			
	Demolition Cost	Concrete demolition	ConcreteDemo1	3.97	/CY						1182					CY		1182	CY	4693
	Concrete's Vol. Demolished																1.3	1537	CY	
	Loading Cost	Front end loader 3 CY	02315 424 1300	1.39	/CY													1537	CY	2136
	Transportation Cost	12 CY (16 Ton) Dump Truck 1/2 mi. md. tri	02315 490 0320	3.44	/CY													1537	CY	5287
	Disposal Costs	On site disposal	02220 240 5550	7.6	/CY													1537	CY	11681
	Subtotal																			
	Concrete Demolition																			
	Demolition Cost																			
	Concrete's Vol. Demolished																			
	Loading Cost																			
	Transportation Cost																			
	Disposal Costs																			
	Subtotal																			
	Concrete Demolition																			
	Demolition Cost																			
	Concrete's Vol. Demolished																			
	Loading Cost																			
	Transportation Cost																			
	Disposal Costs																			
	Subtotal																			
	Total																			

Ref.	Description	Materials	Means Reference Number	Unit Cost	Unit	Length	Width	Height	Diameter	Area	Volume	Weight	Density	Time	Number	Unit	Swell Factor	Quantity	Unit	Cost
	Reclaim Belt BC 4 No 9																			
	Structure's Demolition Cost	Steel Bld. Large	02220 110 0012	0.2	/CF						35180					CF		35180	CF	7036
	Structure's Vol. Demolished																0.35	456	CY	
	Rubble's Weight (exclude steel)																			
	Truck's Capacity																			
	Haulage																			
	Transportation Cost Non Steel Truck																			
	Transportation Cost Non Steel Drive																			
	Disposal Cost Non Steel																			
	Steel's Weight											40				TON		40	TON	
	Truck's Capacity																			
	Haulage																			
	Transportation Cost Steel Truck	Truck dump 16 ton payload	01590 200 5300	435.96	/day									2.5		DAY		2.5	DAY	1090
	Transportation Cost Steel Truck Drive	Truck Driver, Heavy	Trhv	$42.00	HR									20		HR		20	HR	840
	Disposal Cost Steel																			
	Subtotal																			8966
	Equipment 's Disposal Cost																			
	Dismantling Cost																			
	Equipment 's Vol. Demolished																			
	Loading Costs																			
	Transport Costs																			
	Disposal Costs																			
	Subtotal																			
	Concrete Demolition																			
	Demolition Cost	Concrete demolition	ConcreteDemo1	3.97	/CY						39					CY		39	CY	155
	Concrete's Vol. Demolished																1.3	51	CY	
	Loading Cost	Front end loader 3 CY	02315 424 1300	1.39	/CY													51	CY	71
	Transportation Cost	12 CY (16 Ton) Dump Truck 1/2 mi. md. tri	02315 490 0320	3.44	/CY													51	CY	175
	Disposal Costs	On site disposal	02220 240 5550	7.6	/CY													51	CY	388
	Subtotal																			789
	Concrete Demolition																			
	Demolition Cost																			
	Concrete's Vol. Demolished																			
	Loading Cost																			
	Transportation Cost																			
	Disposal Costs																			
	Subtotal																			
	Concrete Demolition																			
	Demolition Cost																			
	Concrete's Vol. Demolished																			
	Loading Cost																			
	Transportation Cost																			
	Disposal Costs																			
	Subtotal																			
	Total																			9755

Ref.	Description	Materials	Means Reference Number	Unit Cost	Unit	Length	Width	Height	Diameter	Area	Volume	Weight	Density	Time	Number	Unit	Swell Factor	Quantity	Unit	Cost
	Escape Tunnel 60 inch No 10																			
	Structure's Demolition Cost	Steel Bld. Large	02220 110 0012	0.2	/CF						2827					CF		2827	CF	565
	Structure's Vol. Demolished																0.35	37	CY	
	Rubble's Weight (exclude steel)																			
	Truck's Capacity																			
	Haulage																			
	Transportation Cost Non Steel Truck																			
	Transportation Cost Non Steel Drive																			
	Disposal Cost Non Steel																			
	Steel's Weight											4				TON		4	TON	
	Truck's Capacity																			
	Haulage																			
	Transportation Cost Steel Truck	Truck dump 16 ton payload	01590 200 5300	435.96	/day									0.3		DAY		0.3	DAY	131
	Transportation Cost Steel Truck Drive	Truck Driver, Heavy	Trhv	$42.00	HR									2		HR		2	HR	84
	Disposal Cost Steel																			
	Subtotal																			780
	Equipment 's Disposal Cost																			
	Dismantling Cost																			
	Equipment 's Vol. Demolished																			
	Loading Costs																			
	Transport Costs																			
	Disposal Costs																			
	Subtotal																			
	Concrete Demolition																			
	Demolition Cost																			
	Concrete's Vol. Demolished																			
	Loading Cost																			
	Transportation Cost																			
	Disposal Costs																			
	Subtotal																			
	Concrete Demolition																			
	Demolition Cost																			
	Concrete's Vol. Demolished																			
	Loading Cost																			
	Transportation Cost																			
	Disposal Costs																			
	Subtotal																			
	Concrete Demolition																			
	Demolition Cost																			
	Concrete's Vol. Demolished																			
	Loading Cost																			
	Transportation Cost																			
	Disposal Costs																			
	Subtotal																			
	Total																			780

Ref.	Description	Materials	Means Reference Number	Unit Cost	Unit	Length	Width	Height	Diameter	Area	Volume	Weight	Density	Time	Number	Unit	Swell Factor	Quantity	Unit	Cost
	Crusher Building No 11																			
	Structure's Demolition Cost	Steel Bld. Large	02220 110 0012	0.2	/CF						93305					CF		93305	CF	18661
	Structure's Vol. Demolished																0.35	1210	CY	
	Rubble's Weight (exclude steel)																			
	Truck's Capacity																			
	Haulage																			
	Transportation Cost Non Steel Truck																			
	Transportation Cost Non Steel Drive																			
	Disposal Cost Non Steel																			
	Steel's Weight											100				TON		100	TON	
	Truck's Capacity																			
	Haulage																			
	Transportation Cost Steel Truck	Truck dump 16 ton payload	01590 200 5300	435.96	/day									6.3		DAY		6.3	DAY	2747
	Transportation Cost Steel Truck Drive	Truck Driver, Heavy	Trhv	$42.00	HR									50		HR		50	HR	2100
	Disposal Cost Steel																			
	Subtotal																			23508
	Equipment 's Disposal Cost																			
	Dismantling Cost																			
	Equipment 's Vol. Demolished																			
	Loading Costs																			
	Transport Costs																			
	Disposal Costs																			
	Subtotal																			
	Concrete Demolition																			
	Demolition Cost	Concrete demolition	ConcreteDemo1	3.97	/CY						91					CY		91	CY	361
	Concrete's Vol. Demolished																1.3	118	CY	
	Loading Cost	Front end loader 3 CY	02315 424 1300	1.39	/CY													118	CY	164
	Transportation Cost	12 CY (16 Ton) Dump Truck 1/2 mi. md. tri	02315 490 0320	3.44	/CY													118	CY	406
	Disposal Costs	On site disposal	02220 240 5550	7.6	/CY													118	CY	897
	Subtotal																			1828
	Concrete Demolition																			
	Demolition Cost																			
	Concrete's Vol. Demolished																			
	Loading Cost																			
	Transportation Cost																			
	Disposal Costs																			
	Subtotal																			
	Concrete Demolition																			
	Demolition Cost																			
	Concrete's Vol. Demolished																			
	Loading Cost																			
	Transportation Cost																			
	Disposal Costs																			
	Total																			[illegible]

Ref.	Description	Materials	Means Reference Number	Unit Cost	Unit	Length	Width	Height	Diameter	Area	Volume	Weight	Density	Time	Number	Unit	Swell Factor	Quantity	Unit	Cost
	Truck Loadout Belt BC 5 No 12																			
	Structure's Demolition Cost	Steel Bld. Large	02220 110 0012	0.2	/CF						30899					CF		30899	CF	6180
	Structure's Vol. Demolished																0.35	401	CY	
	Rubble's Weight (exclude steel)																			
	Truck's Capacity																			
	Haulage																			
	Transportation Cost Non Steel Truck																			
	Transportation Cost Non Steel Drive																			
	Disposal Cost Non Steel																			
	Steel's Weight											20				TON		20	TON	
	Truck's Capacity																			
	Haulage																			
	Transportation Cost Steel Truck	Truck dump 16 ton payload	01590 200 5300	435.96	/day									1.3		DAY		1.3	DAY	567
	Transportation Cost Steel Truck Drive	Truck Driver, Heavy	Trhv	$42.00	HR									10		HR		10	HR	420
	Disposal Cost Steel																			
	Subtotal																			[illegible]
	Equipment 's Disposal Cost																			
	Dismantling Cost																			
	Equipment 's Vol. Demolished																			
	Loading Costs																			
	Transport Costs																			
	Disposal Costs																			
	Subtotal																			[illegible]
	Concrete Demolition																			
	Demolition Cost	Concrete demolition	ConcreteDemo1	3.97	/CY						39					CY		39	CY	155
	Concrete's Vol. Demolished																1.3	51	CY	
	Loading Cost	Front end loader 3 CY	02315 424 1300	1.39	/CY													51	CY	71
	Transportation Cost	12 CY (16 Ton) Dump Truck 1/2 mi. md. tri	02316 490 0320	3.44	/CY													51	CY	175
	Disposal Costs	On site disposal	02220 240 5550	7.6	/CY													51	CY	388
	Subtotal																			[illegible]
	Concrete Demolition																			
	Demolition Cost																			
	Concrete's Vol. Demolished																			
	Loading Cost																			
	Transportation Cost																			
	Disposal Costs																			
	Subtotal																			[illegible]
	Concrete Demolition																			
	Demolition Cost																			
	Concrete's Vol. Demolished																			
	Loading Cost																			
	Transportation Cost																			
	Disposal Costs																			
	Subtotal																			[illegible]
	Total																			[illegible]

Ref.	Description	Materials	Means Reference Number	Unit Cost	Unit	Length	Width	Height	Diameter	Area	Volume	Weight	Density	Time	Number	Unit	Swell Factor	Quantity	Unit	Cost
	Truck Loudout and Scale No 13																			
	Structure's Demolition Cost	Steel Bld. Large	02220 110 0012	0.2	/CF						74976					CF		74976	CF	14995
	Structure's Vol. Demolished																0.35	972	CY	
	Rubble's Weight (exclude steel)																			
	Truck's Capacity																			
	Haulage																			
	Transportation Cost Non Steel Truck																			
	Transportation Cost Non Steel Drive																			
	Disposal Cost Non Steel																			
	Steel's Weight											50				TON		50	TON	
	Truck's Capacity																			
	Haulage																			
	Transportation Cost Steel Truck	Truck dump 16 ton payload	01590 200 5300	435.96	/day									3.1		DAY		3.1	DAY	1351
	Transportation Cost Steel Truck Drive	Truck Driver, Heavy	Trhv	$42.00	HR									25		HR		25	HR	1050
	Disposal Cost Steel																			
	Subtotal																			17396
	Equipment 's Disposal Cost																			
	Dismantling Cost																			
	Equipment 's Vol. Demolished																			
	Loading Costs																			
	Transport Costs																			
	Disposal Costs																			
	Subtotal																			
	Concrete Demolition																			
	Demolition Cost	Concrete demolition	ConcreteDemo1	3.97	/CY						159					CY		159	CY	631
	Concrete's Vol. Demolished																1.3	207	CY	
	Loading Cost	Front end loader 3 CY	02315 424 1300	1.39	/CY													207	CY	288
	Transportation Cost	12 CY (16 Ton) Dump Truck 1/2 mi. md. tri	02315 490 0320	3.44	/CY													207	CY	712
	Disposal Costs	On site disposal	02220 240 5550	7.6	/CY													207	CY	1573
	Subtotal																			[illegible]
	Concrete Demolition																			
	Demolition Cost																			
	Concrete's Vol. Demolished																			
	Loading Cost																			
	Transportation Cost																			
	Disposal Costs																			
	Subtotal																			
	Concrete Demolition																			
	Demolition Cost																			
	Concrete's Vol. Demolished																			
	Loading Cost																			
	Transportation Cost																			
	Disposal Costs																			
	Subtotal																			
	Total																			20000

Ref.	Description	Materials	Means Reference Number	Unit Cost	Unit	Length	Width	Height	Diameter	Area	Volume	Weight	Density	Time	Number	Unit	Swell Factor	Quantity	Unit	Cost
	Bathhouse No 14																			
	Structure's Demolition Cost	Steel Bld. Large	02220 110 0012	0.2	/CF						416365					CF		416365	CF	83273
	Structure's Vol. Demolished																0.2	3084	CY	
	Rubble's Weight (exclude steel)																			
	Truck's Capacity																			
	Haulage																			
	Transportation Cost Non Steel Truck																			
	Transportation Cost Non Steel Drive																			
	Disposal Cost Non Steel	City Services	City Service Price	4	/CY													3084	CY	12336
	Steel's Weight											107								
	Truck's Capacity																			
	Haulage																			
	Transportation Cost Steel Truck	Truck dump 16 ton payload	01590 200 5300	435.96	/day									6.7		DAY		6.7	DAY	2921
	Transportation Cost Steel Truck Drive	Truck Driver, Heavy	Trhv	$42.00	HR									54		HR		54	HR	2268
	Disposal Cost Steel																			
	Subtotal																			100798
	Equipment 's Disposal Cost																			
	Dismantling Cost																			
	Equipment 's Vol. Demolished																			
	Loading Costs																			
	Transport Costs																			
	Disposal Costs																			
	Subtotal																			
	Concrete Demolition																			
	Demolition Cost	Concrete demolition	ConcreteDemo1	3.97	/CY						524					CY		524	CY	2080
	Concrete's Vol. Demolished																1.3	681	CY	
	Loading Cost	Front end loader 3 CY	02315 424 1300	1.39	/CY													681	CY	947
	Transportation Cost	12 CY (16 Ton) Dump Truck 1/2 mi. md. tri	02315 490 0320	3.44	/CY													681	CY	2343
	Disposal Costs	On site disposal	02220 240 5550	7.6	/CY													681	CY	5176
	Subtotal																			10546
	Concrete Demolition																			
	Demolition Cost																			
	Concrete's Vol. Demolished																			
	Loading Cost																			
	Transportation Cost																			
	Disposal Costs																			
	Subtotal																			
	Concrete Demolition																			
	Demolition Cost																			
	Concrete's Vol. Demolished																			
	Loading Cost																			
	Transportation Cost																			
	Disposal Costs																			
	Total																			

Ref.	Description	Materials	Means Reference Number	Unit Cost	Unit	Length	Width	Height	Diameter	Area	Volume	Weight	Density	Time	Number	Unit	Swell Factor	Quantity	Unit	Cost
	Substation No 15																			
	Structure's Demolition Cost	Steel Bld. Large	02220 110 0012	0.2	/CF						4000					CF		4000	CF	800
	Structure's Vol. Demolished																0.35	52	CY	
	Rubble's Weight (exclude steel)																			
	Truck's Capacity																			
	Haulage																			
	Transportation Cost Non Steel Truck																			
	Transportation Cost Non Steel Drive																			
	Disposal Cost Non Steel	City Services	City Service Price	4	/CY													52	CY	208
	Steel's Weight																			
	Truck's Capacity																			
	Haulage																			
	Transportation Cost Steel Truck																			
	Transportation Cost Steel Truck Drive																			
	Disposal Cost Steel																			
	Subtotal																			1008
	Equipment 's Disposal Cost																			
	Dismantling Cost																			
	Equipment 's Vol. Demolished																			
	Loading Costs																			
	Transport Costs																			
	Disposal Costs																			
	Subtotal																			
	Concrete Demolition																			
	Demolition Cost	Concrete demolition	ConcreteDemo1	3.97	/CY						24					CY		24	CY	95
	Concrete's Vol. Demolished																1.3	31	CY	
	Loading Cost	Front end loader 3 CY	02315 424 1300	1.39	/CY													31	CY	43
	Transportation Cost	12 CY (18 Ton) Dump Truck 1/2 mi. md. tri	02315 490 0320	3.44	/CY													31	CY	107
	Disposal Costs	On site disposal	02220 240 5550	7.6	/CY													31	CY	236
	Subtotal																			481
	Concrete Demolition																			
	Demolition Cost																			
	Concrete's Vol. Demolished																			
	Loading Cost																			
	Transportation Cost																			
	Disposal Costs																			
	Subtotal																			
	Concrete Demolition																			
	Demolition Cost																			
	Concrete's Vol. Demolished																			
	Loading Cost																			
	Transportation Cost																			
	Disposal Costs																			
	Subtotal																			
	Total																			1489

Ref.	Description	Materials	Means Reference Number	Unit Cost	Unit	Length	Width	Height	Diameter	Area	Volume	Weight	Density	Time	Number	Unit	Swell Factor	Quantity	Unit	Cost
	Substation No 15																			
	Structure's Demolition Cost	Steel Bld. Large	02220 110 0012	0.2	/CF						4000					CF		4000	CF	800
	Structure's Vol. Demolished																0.35	52	CY	
	Rubble's Weight (exclude steel)																			
	Truck's Capacity																			
	Haulage																			
	Transportation Cost Non Steel Truck																			
	Transportation Cost Non Steel Drive																			
	Disposal Cost Non Steel	City Services	City Service Price	4	/CY													52	CY	208
	Steel's Weight																			
	Truck's Capacity																			
	Haulage																			
	Transportation Cost Steel Truck																			
	Transportation Cost Steel Truck Drive																			
	Disposal Cost Steel																			
	Subtotal																			1008
	Equipment 's Disposal Cost																			
	Dismantling Cost																			
	Equipment 's Vol. Demolished																			
	Loading Costs																			
	Transport Costs																			
	Disposal Costs																			
	Subtotal																			
	Concrete Demolition																			
	Demolition Cost	Concrete demolition	ConcreteDemo1	3.97	/CY						24					CY		24	CY	95
	Concrete's Vol. Demolished																1.3	31	CY	
	Loading Cost	Front end loader 3 CY	02315 424 1300	1.39	/CY													31	CY	43
	Transportation Cost	12 CY (16 Ton) Dump Truck 1/2 mi. md. trip	02315 490 0320	3.44	/CY													31	CY	107
	Disposal Costs	On site disposal	02220 240 5550	7.6	/CY													31	CY	236
	Subtotal																			481
	Concrete Demolition																			
	Demolition Cost																			
	Concrete's Vol. Demolished																			
	Loading Cost																			
	Transportation Cost																			
	Disposal Costs																			
	Subtotal																			
	Concrete Demolition																			
	Demolition Cost																			
	Concrete's Vol. Demolished																			
	Loading Cost																			
	Transportation Cost																			
	Disposal Costs																			
	Subtotal																			
	Total																			

Ref.	Description	Materials	Means Reference Number	Unit Cost	Unit	Length	Width	Height	Diameter	Area	Volume	Weight	Density	Time	Number	Unit	Swell Factor	Quantity	Unit	Cost
	Power Lines and Poles No 16																			
	Structure's Demolition Cost	Dugout Powerline	Dugout 1	0.23	/FT	1937										FT		1937	FT	446
	Structure's Vol. Demolished																			
	Rubble's Weight (exclude steel)																			
	Truck's Capacity																			
	Haulage																			
	Transportation Cost Non Steel Truck																			
	Transportation Cost Non Steel Drive																			
	Disposal Cost Non Steel																			
	Steel's Weight																			
	Truck's Capacity																			
	Haulage																			
	Transportation Cost Steel Truck																			
	Transportation Cost Steel Truck Drive																			
	Disposal Cost Steel																			
	Subtotal																			[illegible]
	Power Poles																			
	Equipment 's Disposal Cost	Dugout Power Poles	Dugout 2	126	/EA										12	EA		12	EA	1512
	Dismantling Cost																			
	Equipment 's Vol. Demolished																			
	Loading Costs																			
	Transport Costs																			
	Disposal Costs																			
	Subtotal																			[illegible]
	Concrete Demolition																			
	Demolition Cost																			
	Concrete's Vol. Demolished																			
	Loading Cost																			
	Transportation Cost																			
	Disposal Costs																			
	Subtotal																			
	Concrete Demolition																			
	Demolition Cost																			
	Concrete's Vol. Demolished																			
	Loading Cost																			
	Transportation Cost																			
	Disposal Costs																			
	Subtotal																			
	Concrete Demolition																			
	Demolition Cost																			
	Concrete's Vol. Demolished																			
	Loading Cost																			
	Transportation Cost																			
	Disposal Costs																			
	Subtotal																			
	Total																			[illegible]

Ref.	Description	Materials	Means Reference Number	Unit Cost	Unit	Length	Width	Height	Diameter	Area	Volume	Weight	Density	Time	Number	Unit	Swell Factor	Quantity	Unit	Cost
	Retaining Wall No 17																			
	Structure's Demolition Cost																			
	Structure's Vol. Demolished																			
	Rubble's Weight (exclude steel)																			
	Truck's Capacity																			
	Haulage																			
	Transportation Cost Non Steel Truck																			
	Transportation Cost Non Steel Drive																			
	Disposal Cost Non Steel																			
	Steel's Weight																			
	Truck's Capacity																			
	Haulage																			
	Transportation Cost Steel Truck																			
	Transportation Cost Steel Truck Drive																			
	Disposal Cost Steel																			
	Subtotal																			
	Equipment 's Disposal Cost																			
	Dismantling Cost																			
	Equipment 's Vol. Demolished																			
	Loading Costs																			
	Transport Costs																			
	Disposal Costs																			
	Subtotal																			
	Concrete Demolition																			
	Demolition Cost	Concrete demolition	ConcreteDemo1	3.97	/CY						30					CY		30	CY	119
	Concrete's Vol. Demolished																1.3	39	CY	
	Loading Cost	Front end loader 3 CY	02315 424 1300	1.39	/CY													39	CY	54
	Transportation Cost	12 CY (16 Ton) Dump Truck 1/2 mi. md. tri	02315 490 0320	3.44	/CY													39	CY	134
	Disposal Costs	On site disposal	02220 240 5550	7.6	/CY													39	CY	296
	Subtotal																			603
	Concrete Demolition																			
	Demolition Cost																			
	Concrete's Vol. Demolished																			
	Loading Cost																			
	Transportation Cost																			
	Disposal Costs																			
	Subtotal																			
	Concrete Demolition																			
	Demolition Cost																			
	Concrete's Vol. Demolished																			
	Loading Cost																			
	Transportation Cost																			
	Disposal Costs																			
	Subtotal																			
	Total																			

Ref.	Description	Materials	Means Reference Number	Unit Cost	Unit	Length	Width	Height	Diameter	Area	Volume	Weight	Density	Time	Number	Unit	Swell Factor	Quantity	Unit	Cost
	Gabion Wall No 18																			
	Structures Volume										880					CY				
	Demolition Time 60 CY/ DAY													117		HR				
	Structure's Demolition Cost	Crew B 13	MeansCrewB13	395.16														117	HR	46234
	Structure's Vol. Demolished																			
	Rubble's Weight (exclude steel)												2			TON/CY		1760	TON	
	Truck's Capacity																			
	Haulage																			
	Transportation Cost Non Steel Truck	Truck dump 16 ton payload	01590 200 5300	435.96	/day									14.6		DAY		14.6	DAY	6365
	Transportation Cost Non Steel Drive	Truck Driver, Heavy	Trhv	$42.00	HR									117		HR		117	HR	4914
	Disposal Cost Non Steel																			
	Steel's Weight																			
	Truck's Capacity																			
	Haulage																			
	Transportation Cost Steel Truck																			
	Transportation Cost Steel Truck Drive																			
	Disposal Cost Steel																			
	[illegible]																			
	Equipment 's Disposal Cost																			
	Dismantling Cost																			
	Equipment 's Vol. Demolished																			
	Loading Costs																			
	Transport Costs																			
	Disposal Costs																			
	Subtotal																			
	Concrete Demolition																			
	Demolition Cost																			
	Concrete's Vol. Demolished																			
	Loading Cost																			
	Transportation Cost																			
	Disposal Costs																			
	[illegible]																			
	Concrete Demolition																			
	Demolition Cost																			
	Concrete's Vol. Demolished																			
	Loading Cost																			
	Transportation Cost																			
	Disposal Costs																			
	Subtotal																			
	Concrete Demolition																			
	Demolition Cost																			
	Concrete's Vol. Demolished																			
	Loading Cost																			
	Transportation Cost																			
	Disposal Costs																			
	[illegible]																			
	Total																			[illegible]

Ref.	Description	Materials	Means Reference Number	Unit Cost	Unit	Length	Width	Height	Diameter	Area	Volume	Weight	Density	Time	Number	Unit	Swell Factor	Quantity	Unit	Cost
	Pump House No 19																			
	Structure's Demolition Cost	Steel Bld. Large	02220 110 0012	0.2	/CF						2219					CF		2219	CF	444
	Structure's Vol. Demolished																			
	Rubble's Weight (exclude steel)																			
	Truck's Capacity																			
	Haulage																			
	Transportation Cost Non Steel Truck																			
	Transportation Cost Non Steel Drive																			
	Disposal Cost Non Steel																			
	Steel's Weight											5				TON		5	TON	
	Truck's Capacity																			
	Haulage																			
	Transportation Cost Steel Truck	Truck dump 16 ton payload	01590 200 5300	435.96	/day									0.3		DAY		0.3	DAY	131
	Transportation Cost Steel Truck Drive	Truck Driver, Heavy	Trhv	$42.00	HR									2		HR		2	HR	84
	Disposal Cost Steel																			
	Equipment 's Disposal Cost																			
	Dismantling Cost																			
	Equipment 's Vol. Demolished																			
	Loading Costs																			
	Transport Costs																			
	Disposal Costs																			
	Concrete Demolition																			
	Demolition Cost	Concrete demolition	ConcreteDemo1	3.97	/CY						82					CY		82	CY	326
	Concrete's Vol. Demolished																1.3	107	CY	
	Loading Cost	Front end loader 3 CY	02315 424 1300	1.39	/CY													107	CY	149
	Transportation Cost	12 CY (16 Ton) Dump Truck 1/2 mi. md. tri	02315 490 0320	3.44	/CY													107	CY	368
	Disposal Costs	On site disposal	02220 240 5550	7.6	/CY													107	CY	813
	Concrete Demolition																			
	Demolition Cost																			
	Concrete's Vol. Demolished																			
	Loading Cost																			
	Transportation Cost																			
	Disposal Costs																			
	Concrete Demolition																			
	Demolition Cost																			
	Concrete's Vol. Demolished																			
	Loading Cost																			
	Transportation Cost																			
	Disposal Costs																			
	Total																			[illegible]

Ref.	Description	Materials	Means Reference Number	Unit Cost	Unit	Length	Width	Height	Diameter	Area	Volume	Weight	Density	Time	Number	Unit	Swell Factor	Quantity	Unit	Cost
	Paved Road No 20																			
	Structure's Demolition Cost																			
	Structure's Vol. Demolished																			
	Rubble's Weight (exclude steel)																			
	Truck's Capacity																			
	Haulage																			
	Transportation Cost Non Steel Truck																			
	Transportation Cost Non Steel Drive																			
	Disposal Cost Non Steel																			
	Steel's Weight																			
	Truck's Capacity																			
	Haulage																			
	Transportation Cost Steel Truck																			
	Transportation Cost Steel Truck Drive																			
	Disposal Cost Steel																			
	Subtotal																			
	Equipment 's Disposal Cost																			
	Dismantling Cost																			
	Equipment 's Vol. Demolished																			
	Loading Costs																			
	Transport Costs																			
	Disposal Costs																			
	Subtotal																			
	Apshalt Demolition																			
	Demolition Cost	Pavement Removal 4-6"	02220 250 5050	6.55	/SY					8448						SY		8448	SY	55334
	Concrete's Vol. Demolished																			
	Loading Cost																			
	Transportation Cost																			
	Disposal Costs	On site disposal	02220 240 5550	7.6	/CY						156					CY		156	CY	1186
	Subtotal																			
	Concrete Demolition																			
	Demolition Cost																			
	Concrete's Vol. Demolished																			
	Loading Cost																			
	Transportation Cost																			
	Disposal Costs																			
	Subtotal																			
	Concrete Demolition																			
	Demolition Cost																			
	Concrete's Vol. Demolished																			
	Loading Cost																			
	Transportation Cost																			
	Disposal Costs																			
	Subtotal																			
	Total																			

Ref.	Description	Materials	Means Reference Number	Unit Cost	Unit	Length	Width	Height	Diameter	Area	Volume	Weight	Density	Time	Number	Unit	Swell Factor	Quantity	Unit	Cost
	Stream Culvert 72 inch No 21																			
	Excavate Culvert	Excavation Bulk Bank 2 CY (322BL)	02315 424 0260	1.7	/CY	2350	12	12								CF		12533	CY	21306
	Backfill Culvert	Backfill Trench Mininal Haul 2 1/4 CY	02315 610 3080	1.53	/CY	2350	12	12								CF		12533	CY	19175
	Structure's Vol. Demolished																			
	Rubble's Weight (exclude steel)																			
	Truck's Capacity																			
	Haulage																			
	Transportation Cost Non Steel Truck																			
	Transportation Cost Non Steel Drive																			
	Disposal Cost Non Steel																			
	Steel's Weight											94				TON		94	TON	
	Truck's Capacity																			
	Haulage																			
	Transportation Cost Steel Truck	Truck dump 16 ton payload	01590 200 5300	435.96	/day									5.9		DAY		5.9	DAY	2572
	Transportation Cost Steel Truck Drive	Truck Driver, Heavy	Trhv	$42.00	HR									47		HR		47	HR	1974
	Disposal Cost Steel																			
	Subtotal																			[illegible]
	Equipment 's Disposal Cost																			
	Dismantling Cost																			
	Equipment 's Vol. Demolished																			
	Loading Costs																			
	Transport Costs																			
	Disposal Costs																			
	Subtotal																			
	Concrete Demolition																			
	Demolition Cost																			
	Concrete's Vol. Demolished																			
	Loading Cost																			
	Transportation Cost																			
	Disposal Costs																			
	Concrete Demolition																			
	Demolition Cost																			
	Concrete's Vol. Demolished																			
	Loading Cost																			
	Transportation Cost																			
	Disposal Costs																			
	Subtotal																			
	Concrete Demolition																			
	Demolition Cost																			
	Concrete's Vol. Demolished																			
	Loading Cost																			
	Transportation Cost																			
	Disposal Costs																			
	Subtotal																			
	Total																			[illegible]

Ref.	Description	Materials	Means Reference Number	Unit Cost	Unit	Length	Width	Height	Diameter	Area	Volume	Weight	Density	Time	Number	Unit	Swell Factor	Quantity	Unit	Cost
	Water Tanks No 22																			
	Structure's Demolition Cost	Steel Bld. Large	02220 110 0012	0.2	/CF						241					CF		241	CF	48
	Structure's Vol. Demolished																0.35	3	CY	
	Rubble's Weight (exclude steel)																			
	Truck's Capacity																			
	Haulage																			
	Transportation Cost Non Steel Truck																			
	Transportation Cost Non Steel Drive																			
	Disposal Cost Non Steel																			
	Steel's Weight											39				TON		39	TON	
	Truck's Capacity																			
	Haulage																			
	Transportation Cost Steel Truck	Truck dump 16 ton payload	01590 200 5300	435.96	/day									2.4		DAY		2.4	DAY	1046
	Transportation Cost Steel Truck Drive	Truck Driver, Heavy	Trhv	$42.00	HR									19		HR		19	HR	798
	Disposal Cost Steel																			
	Subtotal																			1892
	Equipment 's Disposal Cost																			
	Dismantling Cost																			
	Equipment 's Vol. Demolished																			
	Loading Costs																			
	Transport Costs																			
	Disposal Costs																			
	Subtotal																			
	Concrete Demolition																			
	Demolition Cost	Concrete demolition	ConcreteDemo1	3.97	/CY						50					CY		50	CY	199
	Concrete's Vol. Demolished																1.3	65	CY	
	Loading Cost	Front end loader 3 CY	02315 424 1300	1.39	/CY													65	CY	90
	Transportation Cost	12 CY (16 Ton) Dump Truck 1/2 mi. md. tri	02315 490 0320	3.44	/CY													65	CY	224
	Disposal Costs	On site disposal	02220 240 5550	7.6	/CY													65	CY	494
	Subtotal																			1007
	Concrete Demolition																			
	Demolition Cost																			
	Concrete's Vol. Demolished																			
	Loading Cost																			
	Transportation Cost																			
	Disposal Costs																			
	Subtotal																			
	Concrete Demolition																			
	Demolition Cost																			
	Concrete's Vol. Demolished																			
	Loading Cost																			
	Transportation Cost																			
	Disposal Costs																			
	Total																			[illegible]

Ref.	Description	Materials	Means Reference Number	Unit Cost	Unit	Length	Width	Height	Diameter	Area	Volume	Weight	Density	Time	Number	Unit	Swell Factor	Quantity	Unit	Cost
	Rock Dust Bin No 23																			
	Structure's Demolition Cost	Steel Bld. Large	02220 110 0012	0.2	/CF						2265					CF		2265	CF	453
	Structure's Vol. Demolished																0.35	29	CY	
	Rubble's Weight (exclude steel)																			
	Truck's Capacity																			
	Haulage																			
	Transportation Cost Non Steel Truck																			
	Transportation Cost Non Steel Drive																			
	Disposal Cost Non Steel																			
	Steel's Weight											5				TON		5	TON	
	Truck's Capacity																			
	Haulage																			
	Transportation Cost Steel Truck	Truck dump 16 ton payload	01590 200 5300	435.96	/day									0.3		DAY		0.3	DAY	131
	Transportation Cost Steel Truck Drive	Truck Driver, Heavy	Trhv	$42.00	HR									2		HR		2	HR	84
	Disposal Cost Steel																			
	Subtotal																			668
	Equipment 's Disposal Cost																			
	Dismantling Cost																			
	Equipment 's Vol. Demolished																			
	Loading Costs																			
	Transport Costs																			
	Disposal Costs																			
	Subtotal																			
	Concrete Demolition																			
	Demolition Cost	Concrete demolition	ConcreteDemo1	3.97	/CY						12					CY		12	CY	48
	Concrete's Vol. Demolished																1.3	16	CY	
	Loading Cost	Front end loader 3 CY	02315 424 1300	1.39	/CY													16	CY	22
	Transportation Cost	12 CY (16 Ton) Dump Truck 1/2 mi. md. tri	02315 490 0320	3.44	/CY													16	CY	55
	Disposal Costs	On site disposal	02220 240 5550	7.6	/CY													16	CY	122
	Subtotal																			247
	Concrete Demolition																			
	Demolition Cost																			
	Concrete's Vol. Demolished																			
	Loading Cost																			
	Transportation Cost																			
	Disposal Costs																			
	Subtotal																			
	Concrete Demolition																			
	Demolition Cost																			
	Concrete's Vol. Demolished																			
	Loading Cost																			
	Transportation Cost																			
	Disposal Costs																			
	Subtotal																			
	Total																			

Ref.	Description	Materials	Means Reference Number	Unit Cost	Unit	Length	Width	Height	Diameter	Area	Volume	Weight	Density	Time	Number	Unit	Swell Factor	Quantity	Unit	Cost
	Fuel Tank and Fuel Station No 24																			
	Structure's Demolition Cost	Steel Bld. Large	02220 110 0012	0.2	/CF						3945					CF		3945	CF	789
	Structure's Vol. Demolished																0.35	51	CY	
	Rubble's Weight (exclude steel)																			
	Truck's Capacity																			
	Haulage																			
	Transportation Cost Non Steel Truck																			
	Transportation Cost Non Steel Drive																			
	Disposal Cost Non Steel																			
	Steel's Weight											7				TON		7	TON	
	Truck's Capacity																			
	Haulage																			
	Transportation Cost Steel Truck	Truck dump 16 ton payload	01590 200 5300	435.96	/day									0.4		DAY		0.4	DAY	174
	Transportation Cost Steel Truck Drive	Truck Driver, Heavy	Trhv	$42.00	HR									3		HR		3	HR	126
	Disposal Cost Steel																			
	Subtotal																			1069
	Equipment 's Disposal Cost																			
	Dismantling Cost																			
	Equipment 's Vol. Demolished																			
	Loading Costs																			
	Transport Costs																			
	Disposal Costs																			
	Subtotal																			
	Concrete Demolition																			
	Demolition Cost	Concrete demolition	ConcreteDemo1	3.97	/CY						12					CY		12	CY	48
	Concrete's Vol. Demolished																1.3	16	CY	
	Loading Cost	Front end loader 3 CY	02315 424 1300	1.39	/CY													16	CY	22
	Transportation Cost	12 CY (16 Ton) Dump Truck 1/2 mi. md. tri	02315 490 0320	3.44	/CY													16	CY	55
	Disposal Costs	On site disposal	02220 240 5550	7.6	/CY													16	CY	122
	Subtotal																			247
	Concrete Demolition																			
	Demolition Cost																			
	Concrete's Vol. Demolished																			
	Loading Cost																			
	Transportation Cost																			
	Disposal Costs																			
	Subtotal																			
	Concrete Demolition																			
	Demolition Cost																			
	Concrete's Vol. Demolished																			
	Loading Cost																			
	Transportation Cost																			
	Disposal Costs																			
	Subtotal																			
	Total																			1316

Ref.	Description	Materials	Means Reference Number	Unit Cost	Unit	Length	Width	Height	Diameter	Area	Volume	Weight	Density	Time	Number	Unit	Swell Factor	Quantity	Unit	Cost
	Holding Tank No 25																			
	Structure's Demolition Cost																			
	Structure's Vol. Demolished																			
	Rubble's Weight (exclude steel)																			
	Truck's Capacity																			
	Haulage																			
	Transportation Cost Non Steel Truck																			
	Transportation Cost Non Steel Drive																			
	Disposal Cost Non Steel	6000 gal. to 8000 gal. tank	02115 200 0310	232	Ea.										1	EA		1	EA	232
	Steel's Weight											2				TON		2	TON	
	Truck's Capacity																			
	Haulage																			
	Transportation Cost Steel Truck	Truck dump 16 ton payload	01590 200 5300	435.96	/day									0.1		DAY		0.1	DAY	44
	Transportation Cost Steel Truck Drive	Truck Driver, Heavy	Trhv	$42.00	HR									1		HR		1	HR	42
	Disposal Cost Steel																			
	Subtotal																			318
	Equipment 's Disposal Cost																			
	Dismantling Cost																			
	Equipment 's Vol. Demolished																			
	Loading Costs																			
	Transport Costs																			
	Disposal Costs																			
	Subtotal																			
	Concrete Demolition																			
	Demolition Cost																			
	Concrete's Vol. Demolished																			
	Loading Cost																			
	Transportation Cost																			
	Disposal Costs																			
	Subtotal																			
	Concrete Demolition																			
	Demolition Cost																			
	Concrete's Vol. Demolished																			
	Loading Cost																			
	Transportation Cost																			
	Disposal Costs																			
	Subtotal																			
	Concrete Demolition																			
	Demolition Cost																			
	Concrete's Vol. Demolished																			
	Loading Cost																			
	Transportation Cost																			
	Disposal Costs																			
	Subtotal																			
	Total																			

Ref.	Description	Materials	Means Reference Number	Unit Cost	Unit	Length	Width	Height	Diameter	Area	Volume	Weight	Density	Time	Number	Unit	Swell Factor	Quantity	Unit	Cost
	Ventilation Fan No 26																			
	Structure's Demolition Cost	Steel Bld. Large	02220 110 0012	0.2	/CF						6850					CF		6850	CF	1370
	Structure's Vol. Demolished																0.35	89	CY	
	Rubble's Weight (exclude steel)																			
	Truck's Capacity																			
	Haulage																			
	Transportation Cost Non Steel Truck																			
	Transportation Cost Non Steel Drive																			
	Disposal Cost Non Steel																			
	Steel's Weight											10				TON		10	TON	
	Truck's Capacity																			
	Haulage																			
	Transportation Cost Steel Truck	Truck dump 16 ton payload	01590 200 5300	435.96	/day									0.6		DAY		0.6	DAY	262
	Transportation Cost Steel Truck Drive	Truck Driver, Heavy	Trhv	$42.00	HR									5		HR		5	HR	210
	Disposal Cost Steel																			
	Equipment 's Disposal Cost																			
	Dismantling Cost																			
	Equipment 's Vol. Demolished																			
	Loading Costs																			
	Transport Costs																			
	Disposal Costs																			
	Concrete Demolition																			
	Demolition Cost																			
	Concrete's Vol. Demolished																			
	Loading Cost																			
	Transportation Cost																			
	Disposal Costs																			
	Concrete Demolition																			
	Demolition Cost																			
	Concrete's Vol. Demolished																			
	Loading Cost																			
	Transportation Cost																			
	Disposal Costs																			
	Concrete Demolition																			
	Demolition Cost																			
	Concrete's Vol. Demolished																			
	Loading Cost																			
	Transportation Cost																			
	Disposal Costs																			
	Total																			1842

Ref.	Description	Materials	Means Reference Number	Unit Cost	Unit	Length	Width	Height	Diameter	Area	Volume	Weight	Density	Time	Number	Unit	Swell Factor	Quantity	Unit	Cost
	Magnet 27																			
	Structure's Demolition Cost	Steel Bld. Large	02220 110 0012	0.2	/CF						35					CF		35	CF	7
	Structure's Vol. Demolished																0.35	0	CY	
	Rubble's Weight (exclude steel)																			
	Truck's Capacity																			
	Haulage																			
	Transportation Cost Non Steel Truck																			
	Transportation Cost Non Steel Drive																			
	Disposal Cost Non Steel																			
	Steel's Weight											2				TON		2	TON	
	Truck's Capacity																			
	Haulage																			
	Transportation Cost Steel Truck	Truck dump 16 ton payload	01590 200 5300	435.96	/day									0.1		DAY		0.1	DAY	44
	Transportation Cost Steel Truck Drive	Truck Driver, Heavy	Trhv	$42.00	HR									1		HR		1	HR	42
	Disposal Cost Steel																			
	Subtotal																			[illegible]
	Equipment 's Disposal Cost																			
	Dismantling Cost																			
	Equipment 's Vol. Demolished																			
	Loading Costs																			
	Transport Costs																			
	Disposal Costs																			
	Subtotal																			[illegible]
	Concrete Demolition																			
	Demolition Cost	Concrete demolition	ConcreteDemo1	3.97	/CY						17					CY		17	CY	67
	Concrete's Vol. Demolished																1.3	22	CY	
	Loading Cost	Front end loader 3 CY	02315 424 1300	1.39	/CY													22	CY	31
	Transportation Cost	12 CY (16 Ton) Dump Truck 1/2 mi. rnd. tri	02315 490 0320	3.44	/CY													22	CY	76
	Disposal Costs	On site disposal	02220 240 5550	7.6	/CY													22	CY	167
	Subtotal																			[illegible]
	Concrete Demolition																			
	Demolition Cost																			
	Concrete's Vol. Demolished																			
	Loading Cost																			
	Transportation Cost																			
	Disposal Costs																			
	Subtotal																			[illegible]
	Concrete Demolition																			
	Demolition Cost																			
	Concrete's Vol. Demolished																			
	Loading Cost																			
	Transportation Cost																			
	Disposal Costs																			
	Subtotal																			[illegible]
	Total																			[illegible]

Ref.	Description	Materials	Means Reference Number	Unit Cost	Unit	Length	Width	Height	Diameter	Area	Volume	Weight	Density	Time	Number	Unit	Swell Factor	Quantity	Unit	Cost
	Water System 28																			
	Excavate Pipe	Excavation Bulk Bank 2 CY (322BL)	02315 424 0260	1.7	/CY	8450	2	4								FT		2504	CY	4257
	Pipe Removal	Pipe removal 12 inch	02220 240 2900	7.45	/FT	8450										FT		8450	FT	62953
	Backfill Trench	Backfill Trench Mininal Haul 2 1/4 CY	02315 610 3080	1.53	/CY	8450	2	4								FT		2504	CY	3831
	Structure's Vol. Demolished																			
	Rubble's Weight (exclude steel)																			
	Truck's Capacity																			
	Haulage																			
	Transportation Cost Non Steel Truck																			
	Transportation Cost Non Steel Drive																			
	Disposal Cost Non Steel																			
	Steel's Weight																			
	Truck's Capacity																			
	Haulage																			
	Transportation Cost Steel Truck																			
	Transportation Cost Steel Truck Drive																			
	Disposal Cost Steel																			
	Subtotal																			
	Equipment 's Disposal Cost																			
	Dismantling Cost																			
	Equipment 's Vol. Demolished																			
	Loading Costs																			
	Transport Costs																			
	Disposal Costs																			
	Subtotal																			
	Concrete Demolition																			
	Demolition Cost																			
	Concrete's Vol. Demolished																			
	Loading Cost																			
	Transportation Cost																			
	Disposal Costs																			
	Subtotal																			
	Concrete Demolition																			
	Demolition Cost																			
	Concrete's Vol. Demolished																			
	Loading Cost																			
	Transportation Cost																			
	Disposal Costs																			
	Subtotal																			
	Concrete Demolition																			
	Demolition Cost																			
	Concrete's Vol. Demolished																			
	Loading Cost																			
	Transportation Cost																			
	Disposal Costs																			
	Subtotal																			

Ref.	Description	Materials	Means Reference Number	Unit Cost	Unit	Length	Width	Height	Diameter	Area	Volume	Weight	Density	Time	Number	Unit	Swell Factor	Quantity	Unit	Cost
	Sewage System 29																			
	Excavate Pipe	Excavation Bulk Bank 2 CY (322BL)	02315 424 0260	1.7	/CY	2832	2	4								FT		839	CY	1426
	Pipe Removal	Pipe removal 12 inch	02220 240 2900	7.45	/FT	2832										FT		2832	FT	21098
	Backfill Trench	Backfill Trench Mininal Haul 2 1/4 CY	02315 610 3080	1.53	/CY	2832	2	4								FT		839	CY	1284
	Structure's Demolition Cost																			
	Structure's Vol. Demolished																			
	Rubble's Weight (exclude steel)																			
	Truck's Capacity																			
	Haulage																			
	Transportation Cost Non Steel Truck																			
	Transportation Cost Non Steel Drive																			
	Disposal Cost Non Steel																			
	Steel's Weight																			
	Truck's Capacity																			
	Haulage																			
	Transportation Cost Steel Truck																			
	Transportation Cost Steel Truck Drive																			
	Disposal Cost Steel																			
	Subtotal																			23808
	Equipment 's Disposal Cost																			
	Dismantling Cost																			
	Equipment 's Vol. Demolished																			
	Loading Costs																			
	Transport Costs																			
	Disposal Costs																			
	Subtotal																			
	Concrete Demolition																			
	Demolition Cost																			
	Concrete's Vol. Demolished																			
	Loading Cost																			
	Transportation Cost																			
	Disposal Costs																			
	Subtotal																			
	Concrete Demolition																			
	Demolition Cost																			
	Concrete's Vol. Demolished																			
	Loading Cost																			
	Transportation Cost																			
	Disposal Costs																			
	Subtotal																			
	Concrete Demolition																			
	Demolition Cost																			
	Concrete's Vol. Demolished																			
	Loading Cost																			
	Transportation Cost																			
	Disposal Costs																			
	Subtotal																			
	Total																			$ 23808

Ref.	Description	Materials	Means Reference Number	Unit Cost	Unit	Length	Width	Height	Diameter	Area	Volume	Weight	Density	Time	Number	Unit	Swell Factor	Quantity	Unit	Cost
	AM01J Nov. 28, 2001																			
	Storage Containers 31																			
	Trailers N0 1																			
	Structure's Demolition Cost	Mixed Materials Bld. Large	02220 110 0100	0.21	/CF	40	10	10							8	FT		32000	CF	6720
	Structure's Vol. Demolished																0.35			
	Rubble's Weight (exclude steel)																			
	Truck's Capacity																			
	Haulage																			
	Transportation Cost Non Steel Truck																			
	Transportation Cost Non Steel Drive																			
	Disposal Cost Non Steel	ECDC	ECDC	35	/TON							24						24	TON	840
	Steel's Weight																			
	Truck's Capacity																			
	Haulage																			
	Transportation Cost Steel Truck																			
	Transportation Cost Steel Truck Drive																			
	Disposal Cost Steel																			
	Subtotal																			7560
	Equipment 's Disposal Cost																			
	Dismantling Cost																			
	Equipment 's Vol. Demolished																			
	Loading Costs																			
	Transport Costs																			
	Disposal Costs																			
	Concrete Demolition																			
	Demolition Cost																			
	Concrete's Vol. Demolished																			
	Loading Cost																			
	Transportation Cost																			
	Disposal Costs																			
	Subtotal																			
	Concrete Demolition																			
	Demolition Cost																			
	Concrete's Vol. Demolished																			
	Loading Cost																			
	Transportation Cost																			
	Disposal Costs																			
	Subtotal																			
	Concrete Demolition																			
	Demolition Cost																			
	Concrete's Vol. Demolished																			
	Loading Cost																			
	Transportation Cost																			
	Disposal Costs																			
	Subtotal																			
	Total																			

Ref.	Description	Materials	Means Reference Number	Unit Cost	Unit	Length	Width	Height	Diameter	Area	Volume	Weight	Density	Time	Number	Unit	Swell Factor	Quantity	Unit	Cost
	Gilson Well No 32																			
	Structure's Demolition Cost	Steel Bld. Large	02220 110 0012	0.2	/CF						800					CF		800	CF	160
	Structure's Vol. Demolished																0.35	10	CY	
	Rubble's Weight (exclude steel)																			
	Truck's Capacity																			
	Haulage																			
	Transportation Cost Non Steel Truck																			
	Transportation Cost Non Steel Drive																			
	Disposal Cost Non Steel																			
	Steel's Weight											0.5				TON		0.5	TON	
	Truck's Capacity																			
	Haulage																			
	Transportation Cost Steel Truck	Truck dump 16 ton payload	01590 200 5300	435.96	/day									0.03		DAY		0.03	DAY	13
	Transportation Cost Steel Truck Drive	Truck Driver, Heavy	Trhv	$42.00	HR									0.2		HR		0.2	HR	8
	Disposal Cost Steel																			
	Subtotal																			181
	Equipment 's Disposal Cost																			
	Dismantling Cost																			
	Equipment 's Vol. Demolished																			
	Loading Costs																			
	Transport Costs																			
	Disposal Costs																			
	Subtotal																			
	Concrete Demolition																			
	Demolition Cost	Concrete demolition	ConcreteDemo1	3.97	/CY						55					CY		55	CY	218
	Concrete's Vol. Demolished																1.3	72	CY	
	Loading Cost	Front end loader 3 CY	02315 424 1300	1.39	/CY													72	CY	100
	Transportation Cost	12 CY (16 Ton) Dump Truck 1/2 mi. md. tri	02315 490 0320	3.44	/CY													72	CY	248
	Disposal Costs	On site disposal	02220 240 5550	7.6	/CY													72	CY	547
	Subtotal																			1,113
	Concrete Demolition																			
	Demolition Cost																			
	Concrete's Vol. Demolished																			
	Loading Cost																			
	Transportation Cost																			
	Disposal Costs																			
	Subtotal																			
	Concrete Demolition																			
	Demolition Cost																			
	Concrete's Vol. Demolished																			
	Loading Cost																			
	Transportation Cost																			
	Disposal Costs																			
	Total																			1,294

Ref.	Description	Materials	Means Reference Number	Unit Cost	Unit	Length	Width	Height	Diameter	Area	Volume	Weight	Density	Time	Number	Unit	Swell Factor	Quantity	Unit	Cost
	Shop Building No 33																			
	Structure's Demolition Cost	Steel Bld. Large	02220 110 0012	0.2	/CF						14400					CF		14400	CF	2880
	Structure's Vol. Demolished																0.35	187	CY	
	Rubble's Weight (exclude steel)																			
	Truck's Capacity																			
	Haulage																			
	Transportation Cost Non Steel Truck																			
	Transportation Cost Non Steel Drive																			
	Disposal Cost Non Steel																			
	Steel's Weight											0.5				TON		0.5	TON	
	Truck's Capacity																			
	Haulage																			
	Transportation Cost Steel Truck	Truck dump 16 ton payload	01590 200 5300	435.96	/day									0.03		DAY		0.03	DAY	13
	Transportation Cost Steel Truck Drive	Truck Driver, Heavy	Trhv	$42.00	HR									0.2		HR		0.2	HR	8
	Disposal Cost Steel																			
	Subtotal																			2901
	Equipment 's Disposal Cost																			
	Dismantling Cost																			
	Equipment 's Vol. Demolished																			
	Loading Costs																			
	Transport Costs																			
	Disposal Costs																			
	Subtotal																			
	Concrete Demolition																			
	Demolition Cost	Concrete demolition	ConcreteDemo1	3.97	/CY						55					CY		55	CY	218
	Concrete's Vol. Demolished																1.3	72	CY	
	Loading Cost	Front end loader 3 CY	02315 424 1300	1.39	/CY													72	CY	100
	Transportation Cost	12 CY (16 Ton) Dump Truck 1/2 mi. md. trip	02315 490 0320	3.44	/CY													72	CY	248
	Disposal Costs	On site disposal	02220 240 5550	7.6	/CY													72	CY	547
	Subtotal																			1113
	Concrete Demolition																			
	Demolition Cost																			
	Concrete's Vol. Demolished																			
	Loading Cost																			
	Transportation Cost																			
	Disposal Costs																			
	Subtotal																			
	Concrete Demolition																			
	Demolition Cost																			
	Concrete's Vol. Demolished																			
	Loading Cost																			
	Transportation Cost																			
	Disposal Costs																			
	Subtotal																			
	Total																			4014

Ref.	Description	Materials	Means Reference Number	Unit Cost	Unit	Length	Width	Height	Diameter	Area	Volume	Weight	Density	Time	Number	Unit	Swell Factor	Quantity	Unit	Cost
	Switch House No 34																			
	Structure's Demolition Cost																			
	Structure's Vol. Demolished																			
	Rubble's Weight (exclude steel)																			
	Truck's Capacity																			
	Haulage																			
	Transportation Cost Non Steel Truck																			
	Transportation Cost Non Steel Drive																			
	Disposal Cost Non Steel																			
	Steel's Weight											16				TON		16	TON	
	Truck's Capacity																			
	Haulage																			
	Transportation Cost Steel Truck	Truck dump 16 ton payload	01590 200 5300	435.96	/day									1		DAY		1	DAY	436
	Transportation Cost Steel Truck Drive	Truck Driver, Heavy	Trhv	$42.00	HR									8		HR		8	HR	336
	Disposal Cost Steel																			
	Subtotal																			772
	Equipment 's Disposal Cost																			
	Dismantling Cost																			
	Equipment 's Vol. Demolished																			
	Loading Costs																			
	Transport Costs																			
	Disposal Costs																			
	Subtotal																			
	Concrete Demolition																			
	Demolition Cost	Concrete demolition	ConcreteDemo1	3.97	/CY						11					CY		11	CY	44
	Concrete's Vol. Demolished																1.3	14	CY	
	Loading Cost	Front end loader 3 CY	02315 424 1300	1.39	/CY													14	CY	19
	Transportation Cost	12 CY (16 Ton) Dump Truck 1/2 mi. md. tri	02315 490 0320	3.44	/CY													14	CY	48
	Disposal Costs	On site disposal	02220 240 5550	7.6	/CY													14	CY	106
	Subtotal																			217
	Concrete Demolition																			
	Demolition Cost																			
	Concrete's Vol. Demolished																			
	Loading Cost																			
	Transportation Cost																			
	Disposal Costs																			
	Subtotal																			
	Concrete Demolition																			
	Demolition Cost																			
	Concrete's Vol. Demolished																			
	Loading Cost																			
	Transportation Cost																			
	Disposal Costs																			
	Subtotal																			

Ref.	Description	Materials	Means Reference Number	Unit Cost	Unit	Length	Width	Height	Diameter	Area	Volume	Weight	Density	Time	Number	Unit	Swell Factor	Quantity	Unit	Cost
	Portals No 35																			
	Structure's Demolition Cost	Seal Portals	AML1	5200	EA.										5	EA		5	EA	26000
	Structure's Vol. Demolished																			
	Rubble's Weight (exclude steel)																			
	Truck's Capacity																			
	Haulage																			
	Transportation Cost Non Steel Truck																			
	Transportation Cost Non Steel Drive																			
	Disposal Cost Non Steel																			
	Steel's Weight																			
	Truck's Capacity																			
	Haulage																			
	Transportation Cost Steel Truck																			
	Transportation Cost Steel Truck Drive																			
	Disposal Cost Steel																			
	Subtotal																			26000
	Equipment 's Disposal Cost																			
	Dismantling Cost																			
	Equipment 's Vol. Demolished																			
	Loading Costs																			
	Transport Costs																			
	Disposal Costs																			
	Subtotal																			
	Concrete Demolition																			
	Demolition Cost																			
	Concrete's Vol. Demolished																			
	Loading Cost																			
	Transportation Cost																			
	Disposal Costs																			
	Subtotal																			
	Concrete Demolition																			
	Demolition Cost																			
	Concrete's Vol. Demolished																			
	Loading Cost																			
	Transportation Cost																			
	Disposal Costs																			
	Subtotal																			
	Concrete Demolition																			
	Demolition Cost																			
	Concrete's Vol. Demolished																			
	Loading Cost																			
	Transportation Cost																			
	Disposal Costs																			
	Subtotal																			

Ref.	Description	Materials	Means Reference Number	Unit Cost	Unit	Length	Width	Height	Diameter	Area	Volume	Weight	Density	Time	Number	Unit	Swell Factor	Quantity	Unit	Cost
	Storage Building No 36																			
	Structure's Demolition Cost	Steel Bld. Large	02220 110 0012	0.2	/CF						2284					CF		2284	CF	457
	Structure's Vol. Demolished																0.35	30	CY	
	Rubble's Weight (exclude steel)																			
	Truck's Capacity																			
	Haulage																			
	Transportation Cost Non Steel Truck																			
	Transportation Cost Non Steel Drive																			
	Disposal Cost Non Steel																			
	Steel's Weight											6				TON		6	TON	
	Truck's Capacity																			
	Haulage																			
	Transportation Cost Steel Truck	Truck dump 16 ton payload	01590 200 5300	435.96	/day									0.4		DAY		0.4	DAY	174
	Transportation Cost Steel Truck Drive	Truck Driver, Heavy	Trhv	$42.00	HR									3		HR		3	HR	126
	Disposal Cost Steel																			
	Subtotal																			757
	Equipment 's Disposal Cost																			
	Dismantling Cost																			
	Equipment 's Vol. Demolished																			
	Loading Costs																			
	Transport Costs																			
	Disposal Costs																			
	Subtotal																			
	Concrete Demolition																			
	Demolition Cost	Concrete demolition	ConcreteDemo1	3.97	/CY						38.4					CY		38.4	CY	152
	Concrete's Vol. Demolished																1.3	50	CY	
	Loading Cost	Front end loader 3 CY	02315 424 1300	1.39	/CY													50	CY	70
	Transportation Cost	12 CY (16 Ton) Dump Truck 1/2 mi. md. tri	02315 490 0320	3.44	/CY													50	CY	172
	Disposal Costs	On site disposal	02220 240 5550	7.6	/CY													50	CY	380
	Subtotal																			774
	Concrete Demolition																			
	Demolition Cost																			
	Concrete's Vol. Demolished																			
	Loading Cost																			
	Transportation Cost																			
	Disposal Costs																			
	Subtotal																			
	Concrete Demolition																			
	Demolition Cost																			
	Concrete's Vol. Demolished																			
	Loading Cost																			
	Transportation Cost																			
	Disposal Costs																			
	Subtotal																			
	Total																			

Ref.	Description	Materials	Means Reference Number	Unit Cost	Unit	Length	Width	Height	Diameter	Area	Volume	Weight	Density	Time	Number	Unit	Swell Factor	Quantity	Unit	Cost
	Sampling System No 37																			
	Structure's Demolition Cost																			
	Structure's Vol. Demolished																			
	Rubble's Weight (exclude steel)																			
	Truck's Capacity																			
	Haulage																			
	Transportation Cost Non Steel Truck																			
	Transportation Cost Non Steel Drive																			
	Disposal Cost Non Steel																			
	Steel's Weight											18				TON		18	TON	
	Truck's Capacity																			
	Haulage																			
	Transportation Cost Steel Truck	Truck dump 16 ton payload	01590 200 5300	435.96	/day									1.1		DAY		1.1	DAY	480
	Transportation Cost Steel Truck Drive	Truck Driver, Heavy	Trhv	$42.00	HR									9		HR		9	HR	378
	Disposal Cost Steel																			
	Subtotal																			
	Equipment 's Disposal Cost																			
	Dismantling Cost																			
	Equipment 's Vol. Demolished																			
	Loading Costs																			
	Transport Costs																			
	Disposal Costs																			
	Subtotal																			
	Concrete Demolition																			
	Demolition Cost	Concrete demolition	ConcreteDemo1	3.97	/CY						19.84					CY		19.84	CY	79
	Concrete's Vol. Demolished																1.3	26	CY	
	Loading Cost	Front end loader 3 CY	02315 424 1300	1.39	/CY													26	CY	36
	Transportation Cost	12 CY (16 Ton) Dump Truck 1/2 mi. md. tri	02315 490 0320	3.44	/CY													26	CY	89
	Disposal Costs	On site disposal	02220 240 5550	7.6	/CY													26	CY	196
	Subtotal																			[illegible]
	Concrete Demolition																			
	Demolition Cost																			
	Concrete's Vol. Demolished																			
	Loading Cost																			
	Transportation Cost																			
	Disposal Costs																			
	Subtotal																			
	Concrete Demolition																			
	Demolition Cost																			
	Concrete's Vol. Demolished																			
	Loading Cost																			
	Transportation Cost																			
	Disposal Costs																			
	Subtotal																			
	Total																			[illegible]

Ref.	Description	Materials	Means Reference Number	Unit Cost	Unit	Length	Width	Height	Diameter	Area	Volume	Weight	Density	Time	Number	Unit	Swell Factor	Quantity	Unit	Cost
	Stoker Storage Bin No 41																			
	Structure's Demolition Cost																			
	Structure's Vol. Demolished																			
	Rubble's Weight (exclude steel)																			
	Truck's Capacity																			
	Haulage																			
	Transportation Cost Non Steel Truck																			
	Transportation Cost Non Steel Drive																			
	Disposal Cost Non Steel																			
	Steel's Weight																			
	Truck's Capacity																			
	Haulage																			
	Transportation Cost Steel Truck																			
	Transportation Cost Steel Truck Drive																			
	Disposal Cost Steel																			
	Subtotal																			
	Equipment 's Disposal Cost																			
	Dismantling Cost																			
	Equipment 's Vol. Demolished																			
	Loading Costs																			
	Transport Costs																			
	Disposal Costs																			
	Subtotal																			
	Concrete Demolition																			
	Demolition Cost	Concrete demolition	ConcreteDemo1	3.97	/CY						35					CY		35	CY	139
	Concrete's Vol. Demolished																1.3	46	CY	
	Loading Cost	Front end loader 3 CY	02315 424 1300	1.39	/CY													46	CY	64
	Transportation Cost	12 CY (16 Ton) Dump Truck 1/2 mi. rnd. tri	02315 490 0320	3.44	/CY													46	CY	158
	Disposal Costs	On site disposal	02220 240 5550	7.6	/CY													46	CY	350
	Subtotal																			711
	Concrete Demolition																			
	Demolition Cost																			
	Concrete's Vol. Demolished																			
	Loading Cost																			
	Transportation Cost																			
	Disposal Costs																			
	Subtotal																			
	Concrete Demolition																			
	Demolition Cost																			
	Concrete's Vol. Demolished																			
	Loading Cost																			
	Transportation Cost																			
	Disposal Costs																			
	Subtotal																			
	Total																			711

Ref.	Description	Materials	Means Reference Number	Unit Cost	Unit	Length	Width	Height	Diameter	Area	Volume	Weight	Density	Time	Number	Unit	Swell Factor	Quantity	Unit	Cost
	Substation No 2 No 42																			
	Structure's Demolition Cost	Mixed Materials Bld. Large	02220 110 0100	0.21	/CF						4000					CF		4000	CF	840
	Structure's Vol. Demolished																0.35	52	CY	
	Rubble's Weight (exclude steel)																			
	Truck's Capacity																			
	Haulage																			
	Transportation Cost Non Steel Truck																			
	Transportation Cost Non Steel Drive																			
	Disposal Cost Non Steel	City Services	City Service Price	4	/CY													52	CY	208
	Steel's Weight																			
	Truck's Capacity																			
	Haulage																			
	Transportation Cost Steel Truck																			
	Transportation Cost Steel Truck Drive																			
	Disposal Cost Steel																			
	Subtotal																			[illegible]
	Equipment 's Disposal Cost																			
	Dismantling Cost																			
	Equipment 's Vol. Demolished																			
	Loading Costs																			
	Transport Costs																			
	Disposal Costs																			
	Subtotal																			
	Concrete Demolition																			
	Demolition Cost	Concrete demolition	ConcreteDemo1	3.97	/CY						57					CY		57	CY	226
	Concrete's Vol. Demolished																1.3	74	CY	
	Loading Cost	Front end loader 3 CY	02315 424 1300	1.39	/CY													74	CY	103
	Transportation Cost	12 CY (16 Ton) Dump Truck 1/2 mi. md. tri	02315 490 0320	3.44	/CY													74	CY	255
	Disposal Costs	On site disposal	02220 240 5550	7.6	/CY													74	CY	562
	Subtotal																			[illegible]
	Concrete Demolition																			
	Demolition Cost																			
	Concrete's Vol. Demolished																			
	Loading Cost																			
	Transportation Cost																			
	Disposal Costs																			
	Subtotal																			
	Concrete Demolition																			
	Demolition Cost																			
	Concrete's Vol. Demolished																			
	Loading Cost																			
	Transportation Cost																			
	Disposal Costs																			
	Subtotal																			
	Total																			[illegible]

Ref.	Description	Materials	Means Reference Number	Unit Cost	Unit	Length	Width	Height	Diameter	Area	Volume	Weight	Density	Time	Number	Unit	Swell Factor	Quantity	Unit	Cost
	Gabion Baskets No 43																			
	Excavate	Excavation Bulk Bank 2 CY (322BL)	02315 424 0260	1.7	/CY						88					CY		88	CY	150
	Support	CLAB	Clab	$41.55										8		hr		8	hr	332
	Disposal	City Services	City Service Price	4	/CY						122					CY		122	CY	488
	See Earthwork																			
	Equipment 's Disposal Cost																			
	Dismantling Cost																			
	Equipment 's Vol. Demolished																			
	Loading Costs																			
	Transport Costs																			
	Disposal Costs																			
	Concrete Demolition																			
	Demolition Cost																			
	Concrete's Vol. Demolished																			
	Loading Cost																			
	Transportation Cost																			
	Disposal Costs																			
	Concrete Demolition																			
	Demolition Cost																			
	Concrete's Vol. Demolished																			
	Loading Cost																			
	Transportation Cost																			
	Disposal Costs																			
	Concrete Demolition																			
	Demolition Cost																			
	Concrete's Vol. Demolished																			
	Loading Cost																			
	Transportation Cost																			
	Disposal Costs																			
	Total																			10,070

Ref.	Description	Materials	Means Reference Number	Unit Cost	Unit	Length	Width	Height	Diameter	Area	Volume	Weight	Density	Time	Number	Unit	Swell Factor	Quantity	Unit	Cost
	Methane Degas Wells 45																			
	Structure's Demolition Cost	Plug Well	AML3	5000	EA.										15	EA		15	EA	75000
	Structure's Vol. Demolished																			
	Rubble's Weight (exclude steel)																			
	Truck's Capacity																			
	Haulage																			
	Transportation Cost Non Steel Truck																			
	Transportation Cost Non Steel Drive																			
	Disposal Cost Non Steel																			
	Steel's Weight																			
	Truck's Capacity																			
	Haulage																			
	Transportation Cost Steel Truck																			
	Transportation Cost Steel Truck Drive																			
	Disposal Cost Steel																			
	Subtotal																			75000
	Fence																			
	Silt Fence	Silt fence	02370 700 1100	1.05	LF	12970										FT		12970	FT	13619
	Chicken Wire Fence	Fence Chicken Wire	02820 410 0012	4.57	LF	12970										FT		12970	FT	59273
	Subtotal																			72892
	Concrete Demolition																			
	Demolition Cost																			
	Concrete's Vol. Demolished																			
	Loading Cost																			
	Transportation Cost																			
	Disposal Costs																			
	Subtotal																			
	Concrete Demolition																			
	Demolition Cost																			
	Concrete's Vol. Demolished																			
	Loading Cost																			
	Transportation Cost																			
	Disposal Costs																			
	Subtotal																			
	Concrete Demolition																			
	Demolition Cost																			
	Concrete's Vol. Demolished																			
	Loading Cost																			
	Transportation Cost																			
	Disposal Costs																			

Ref.	Description	Materials	Means Reference Number	Unit Cost	Unit	Length	Width	Height	Diameter	Area	Volume	Weight	Density	Time	Number	Unit	Swell Factor	Quantity	Unit	Cost
	Pace Fan Culvert																			
	Excavate Culvert	Excavation Bulk Bank 2 CY (322BL)	02315 424 0260	1.7	/CY	440	3	6										293	CY	498
	Backfill Culvert	Backfill Trench Mininal Haul 2 1/4 CY	02315 610 3080	1.53	/CY	440	3	6										293	CY	448
	Rubble's Weight (exclude steel)																			
	Truck's Capacity																			
	Haulage																			
	Transportation Cost Non Steel Truck																			
	Transportation Cost Non Steel Drive																			
	Disposal Cost Non Steel																			
	Steel's Weight											6				ton				
	Truck's Capacity																			
	Haulage																			
	Transportation Cost Steel Truck	Truck dump 16 ton payload	01590 200 5300	435.96	/day									0.4		Day		0.4	Day	174
	Transportation Cost Steel Truck Drive	Truck Driver, Heavy	Trhv	$42.00	HR									3		HR		3	HR	126
	Disposal Cost Steel																			
	[illegible]																			[illegible]
	Equipment 's Disposal Cost																			
	Dismantling Cost																			
	Equipment 's Vol. Demolished																			
	Loading Costs																			
	Transport Costs																			
	Disposal Costs																			
	[illegible]																			
	Concrete Demolition																			
	Demolition Cost																			
	Concrete's Vol. Demolished																			
	Loading Cost																			
	Transportation Cost																			
	Disposal Costs																			
	[illegible]																			
	Concrete Demolition																			
	Demolition Cost																			
	Concrete's Vol. Demolished																			
	Loading Cost																			
	Transportation Cost																			
	Disposal Costs																			
	[illegible]																			
	Concrete Demolition																			
	Demolition Cost																			
	Concrete's Vol. Demolished																			
	Loading Cost																			
	Transportation Cost																			
	Disposal Costs																			
	[illegible]																			
	[illegible]																			
	[illegible]																			

Ref.	Description	Materials	Means Reference Number	Unit Cost	Unit	Length	Width	Height	Diameter	Area	Volume	Weight	Density	Time	Number	Unit	Swell Factor	Quantity	Unit	Cost
	Pace Fan Generator																			
	Structure's Demolition Cost	Steel Bld. Large	02220 110 0012	0.2	/CF	25	25	12								CF		7500	CF	1500
	Structure's Vol. Demolished																0.35	97	CY	
	Rubble's Weight (exclude steel)																			
	Truck's Capacity																			
	Haulage																			
	Transportation Cost Non Steel Truck																			
	Transportation Cost Non Steel Drive																			
	Disposal Cost Non Steel																			
	Steel's Weight											0				TON		0	TON	
	Truck's Capacity																			
	Haulage																			
	Transportation Cost Steel Truck	Truck dump 16 ton payload	01590 200 5300	435.96	/day									0		DAY		0	DAY	0
	Transportation Cost Steel Truck Drive	Truck Driver, Heavy	Trhv	$42.00	HR									0		HR		0	HR	0
	Disposal Cost Steel																			
	Subtotal																			1500
	Equipment 's Disposal Cost																			
	Ducting	Mechanical equipment heavy	15055 300 3600	805	/ton							35				ton		35	ton	28175
	Fan	Mechanical equipment heavy	15055 300 3600	805	/ton							10				ton		10	ton	8050
	Hilfiker Mesh	Mechanical equipment heavy	15055 300 3600	805	/ton							0.7				ton		0.7	ton	564
	Portal plate liner	Mechanical equipment heavy	15055 300 3600	805	/ton							1.2				ton		1.2	ton	966
	Total steel weight											46.9								
	Transportation Cost Steel Truck	Truck dump 16 ton payload	01590 200 5300	435.96	/day									0.6		DAY		0.6	DAY	262
	Transportation Cost Steel Truck Drive	Truck Driver, Heavy	Trhv	$42.00	HR									5		HR		5	HR	210
	Subtotal																			29777
	Portal plate liner																			
	Concrete Demolition																			
	Demolition Cost	Concrete demolition	ConcreteDemo1	3.97	/CY						70					CY		70	CY	278
	Concrete's Vol. Demolished																1.3	91	CY	
	Loading Cost	Front end loader 3 CY	02315 424 1300	1.39	/CY													91	CY	126
	Transportation Cost	12 CY (16 Ton) Dump Truck 1/2 mi. md. tri	02315 490 0320	3.44	/CY													91	CY	313
	Disposal Costs	On site disposal	02220 240 5550	7.6	/CY													91	CY	692
	Subtotal																			1409
	Generator Pad																			
	Concrete Demolition																			
	Demolition Cost	Concrete demolition	ConcreteDemo1	3.97	/CY						128					CY		128	CY	508
	Concrete's Vol. Demolished																1.3	166	CY	
	Loading Cost	Front end loader 3 CY	02315 424 1300	1.39	/CY													166	CY	231
	Transportation Cost	12 CY (16 Ton) Dump Truck 1/2 mi. md. tri	02315 490 0320	3.44	/CY													166	CY	571
	Disposal Costs	On site disposal	02220 240 5550	7.6	/CY													166	CY	1262
	Subtotal																			2572
	Fan Building																			
	Concrete Demolition																			
	Demolition Cost	Concrete demolition	ConcreteDemo1	3.97	/CY						252					CY		252	CY	1000
	Concrete's Vol. Demolished																1.3	328	CY	
	Loading Cost	Front end loader 3 CY	02315 424 1300	1.39	/CY													328	CY	456
	Transportation Cost	12 CY (16 Ton) Dump Truck 1/2 mi. md. tri	02315 490 0320	3.44	/CY													328	CY	1128
	Disposal Costs	On site disposal	02220 240 5550	7.6	/CY													328	CY	2493
	Subtotal																			5077
	Total																			[illegible]

Ref.	Description	Materials	Means Reference Number	Unit Cost	Unit	Length	Width	Height	Diameter	Area	Volume	Weight	Density	Time	Number	Unit	Swell Factor	Quantity	Unit	Cost
	Pace Fan Portal																			
	Seal Portal	Seal Portals	AML1	5200	EA.										1	EA		1	EA	5200
	Structure's Vol. Demolished																			
	Rubble's Weight (exclude steel)																			
	Truck's Capacity																			
	Haulage																			
	Transportation Cost Non Steel Truck																			
	Transportation Cost Non Steel Drive																			
	Disposal Cost Non Steel																			
	Steel's Weight																			
	Truck's Capacity																			
	Haulage																			
	Transportation Cost Steel Truck																			
	Transportation Cost Steel Truck Drive																			
	Disposal Cost Steel																			
	Subtotal																			5200
	Equipment 's Disposal Cost																			
	Dismantling Cost																			
	Equipment 's Vol. Demolished																			
	Loading Costs																			
	Transport Costs																			
	Disposal Costs																			
	Subtotal																			
	Concrete Demolition																			
	Demolition Cost																			
	Concrete's Vol. Demolished																			
	Loading Cost																			
	Transportation Cost																			
	Disposal Costs																			
	Subtotal																			
	Concrete Demolition																			
	Demolition Cost																			
	Concrete's Vol. Demolished																			
	Loading Cost																			
	Transportation Cost																			
	Disposal Costs																			
	Subtotal																			
	Concrete Demolition																			
	Demolition Cost																			
	Concrete's Vol. Demolished																			
	Loading Cost																			
	Transportation Cost																			
	Disposal Costs																			
	Subtotal																			
	Total																			

Ref.	Description	Materials	Means Reference Number	Unit Cost	Unit	Length	Width	Height	Diameter	Area	Volume	Weight	Density	Time	Number	Unit	Swell Factor	Quantity	Unit	Cost
	Refuse Site No 44																			
	See Earthwork also																			
	Remove Fence	Chain link remove 8'-10'	02220 220 1700	2.92	/LF	3250										FT		3250	FT	9490
	Subtotal																			9490
	Equipment 's Disposal Cost																			
	Dismantling Cost																			
	Equipment 's Vol. Demolished																			
	Loading Costs																			
	Transport Costs																			
	Disposal Costs																			
	Subtotal																			
	Concrete Demolition																			
	Demolition Cost																			
	Concrete's Vol. Demolished																			
	Loading Cost																			
	Transportation Cost																			
	Disposal Costs																			
	Subtotal																			
	Concrete Demolition																			
	Demolition Cost																			
	Concrete's Vol. Demolished																			
	Loading Cost																			
	Transportation Cost																			
	Disposal Costs																			
	Subtotal																			
	Concrete Demolition																			
	Demolition Cost																			
	Concrete's Vol. Demolished																			
	Loading Cost																			
	Transportation Cost																			
	Disposal Costs																			
	Subtotal																			
	Total																			9490

Ref.	Description	Materials	Means Reference Number	Unit Cost	Unit	Length	Width	Height	Diameter	Area	Volume	Weight	Density	Time	Number	Unit	Swell Factor	Quantity	Unit	Cost
	Degas Well G2 No 39																			
	Grade and Backfill	Front end loader 3 CY	02315 424 1300	1.39	/CY						56					CY		56	CY	78
	Fill in Mud Pit	Backfill Trench Mininal Haul 2 1/4 CY	02315 610 3080	1.53	/CY						1246					CY		1246	CY	1906
	Subtotal																			1984
	Plug Well Casing	Concrete Ready Mix 8000 psi	03310 220 0412	184	/CY						21					CY		21	CY	3864
	Subtotal																			3864
	Spread Topsoil	Front end loader 3 CY	02315 424 1300	1.39	/CY						3103					CY		3103	CY	4313
	Spread Topsoil	Backfill Trench Mininal Haul 2 1/4 CY	02315 610 3080	1.53	/CY						3103					CY		3103	CY	4748
	Subtotal																			9061
	Fence																			
	Remove Barbed Wire	Fencing Barbed wire 3 strand	02220 220 1600	1.55	/LF	917										FT		917	FT	1421
	Support																			
	Pickup Truck	Pickup Rental	01590 400 7200	80.42	/day									37.2		hr		4.7	day	378
	Foreman	Foreman Average, Outside	Foreman	$57.30	HR									37.2		hr		37.2	hr	2132
	Subtotal																			2510
	Total																			

Ref.	Description	Materials	Means Reference Number	Unit Cost	Unit	Length	Width	Height	Diameter	Area	Volume	Weight	Density	Time	Number	Unit	Swell Factor	Quantity	Unit	Cost
	Degas Well G3 No 40																			
	Grade and Backfill	Front end loader 3 CY	02315 424 1300	1.39	/CY						57					CY		57	CY	79
	Fill in Mud Pit	Backfill Trench Mininal Haul 2 1/4 CY	02315 610 3080	1.53	/CY						2543					CY		2543	CY	3891
	Subtotal																			3970
	Plug Well Casing	Concrete Ready Mix 8000 psi	03310 220 0412	184	/CY						21					CY		21	CY	3864
	Subtotal																			3864
	Spread Topsoil	Front end loader 3 CY	02315 424 1300	1.39	/CY						1182					CY		1182	CY	1643
	Spread Topsoil	Backfill Trench Mininal Haul 2 1/4 CY	02315 610 3080	1.53	/CY						1182					CY		1182	CY	1808
	Subtotal																			[illegible]
	Fence																			
	Remove Barbed Wire	Fencing Barbed wire 3 strand	02220 220 1600	1.55	/LF	542										FT		542	FT	840
	Subtotal																			[illegible]
	Support																			
	Pickup Truck	Pickup Rental	01590 400 7200	80.42	/day									14.4		hr		1.8	day	145
	Foreman	Foreman Average, Outside	Foreman	$57.30	HR									14.4		hr		14.4	hr	825
	Subtotal																			[illegible]
	Total																			13055

Ref.	Description	Materials	Means Reference Number	Unit Cost	Unit	Length	Width	Height	Diameter	Area	Volume	Weight	Density	Time	Number	Unit	Swell Factor	Quantity	Unit	Cost
	Degas Well G4 No 38																			
	Grade and Backfill	Front end loader 3 CY	02315 424 1300	1.39	/CY						42					CY		42	CY	58
	Fill in Mud Pit	Backfill Trench Mininal Haul 2 1/4 CY	02315 610 3080	1.53	/CY						840					CY		840	CY	1285
	Subtotal																			1343
	Plug Well Casing	Concrete Ready Mix 8000 psi	03310 220 0412	184	/CY						21					CY		21	CY	3864
	Subtotal																			3864
	Spread Topsoil	Front end loader 3 CY	02315 424 1300	1.39	/CY						414					CY		414	CY	575
	Spread Topsoil	Backfill Trench Mininal Haul 2 1/4 CY	02315 610 3080	1.53	/CY						414					CY		414	CY	633
	Fence																			
	Remove Barbed Wire					551										FT		551	FT	854
	Support																			
	Pickup Truck	Pickup Rental	01590 400 7200	80.42	/day									5.1		hr		0.6	day	48
	Foreman	Foreman Average, Outside	Foreman	$57.30	HR									5.1		hr		5.1	hr	292
	Total																			7000

Ref.	Description	Materials	Means Reference Number	Unit Cost	Unit	Length	Width	Height	Diameter	Area	Volume	Weight	Density	Time	Number	Unit	Swell Factor	Quantity	Unit	Cost
	Degas Well G 5 MW 05																			
	Grading and Backfill																			
	Fill Mud Pit	Backfill structural 300 HP 50' Dirt	02315 120 5020	0.65	/CY						2074					CY		2074	CY	1348
	Fill Drill Pad	Backfill structural 300 HP 50' Dirt	02315 120 5020	0.65	/CY						2294					CY		2294	CY	1491
	Plug Well Casing	Concrete Ready Mix 8000 psi	03310 220 0412	184	/CY						21					CY		21	CY	3864
	Spread Topsoil	Backfill structural 300 HP 50' Dirt	02315 120 5020	0.65	/CY						2967					CY		2967	CY	1929
	Remove Barbed Wire	Fencing Barbed wire 3 strand	02220 220 1600	1.55	/LF	1070										LF		1070	LF	1659
	Subtotal																			[illegible]
	Equipment 's Disposal Cost																			
	Dismantling Cost																			
	Equipment 's Vol. Demolished																			
	Loading Costs																			
	Transport Costs																			
	Disposal Costs																			
	Subtotal																			
	Concrete Demolition																			
	Demolition Cost																			
	Concrete's Vol. Demolished																			
	Loading Cost																			
	Transportation Cost																			
	Disposal Costs																			
	Subtotal																			
	Concrete Demolition																			
	Demolition Cost																			
	Concrete's Vol. Demolished																			
	Loading Cost																			
	Transportation Cost																			
	Disposal Costs																			
	Subtotal																			
	Concrete Demolition																			
	Demolition Cost																			
	Concrete's Vol. Demolished																			
	Loading Cost																			
	Transportation Cost																			
	Disposal Costs																			
	Total																			[illegible]

Ref.	Description	Materials	Means Reference Number	Unit Cost	Unit	Length	Width	Height	Diameter	Area	Volume	Weight	Density	Time	Number	Unit	Swell Factor	Quantity	Unit	Cost
	Degas Well G 6 MW 06																			
	Grading and Backfill																			
	Fill Mud Pit	Backfill structural 300 HP 50' Dirt	02315 120 5020	0.65	/CY						2074					CY		2074	CY	1348
	Fill Drill Pad	Backfill structural 300 HP 50' Dirt	02315 120 5020	0.65	/CY						4617					CY		4617	CY	3001
	Plug Well Casing	Concrete Ready Mix 8000 psi	03310 220 0412	184	/CY						21					CY		21	CY	3864
	Spread Topsoil	Backfill structural 300 HP 50' Dirt	02315 120 5020	0.65	/CY						540					CY		540	CY	351
	Remove Barbed Wire	Fencing Barbed wire 3 strand	02220 220 1600	1.55	/LF	860										LF		860	LF	1333
	Subtotal																			9897
	Equipment 's Disposal Cost																			
	Dismantling Cost																			
	Equipment 's Vol. Demolished																			
	Loading Costs																			
	Transport Costs																			
	Disposal Costs																			
	Subtotal																			
	Concrete Demolition																			
	Demolition Cost																			
	Concrete's Vol. Demolished																			
	Loading Cost																			
	Transportation Cost																			
	Disposal Costs																			
	Subtotal																			
	Concrete Demolition																			
	Demolition Cost																			
	Concrete's Vol. Demolished																			
	Loading Cost																			
	Transportation Cost																			
	Disposal Costs																			
	Subtotal																			
	Concrete Demolition																			
	Demolition Cost																			
	Concrete's Vol. Demolished																			
	Loading Cost																			
	Transportation Cost																			
	Disposal Costs																			
	Subtotal																			
	[illegible]																			9897

	Equipment Cost	Hourly Operating Costs	Equipment Overhead	Operator's Hourly Wage Rate	Hourly Cost	Number of Men or Eq.	Total Eq. & Lab. Costs	Units	Quantity	Units	Production Rate	Units	Equip. + Labor Time/Dis.	Units	Cost
Facilities Area 01															308109
Facilities Area 02															119177
Stream Channel 03															32869
Gabion Basin 04															
Refuse Pile 05															71327
Pace Canyon Fan Portal															19979
Subtotal															551461

	Equipment Cost	Hourly Operating Costs	Equipment Overhead	Operator's Hourly Wage Rate	Hourly Cost	Number of Men or Eq.	Total Eq. & Lab. Costs	Units	Quantity	Units	Production Rate	Units	Equip. + Labor Time/Dis.	Units	Cost
Dugout Mine															
Facilities Area 01															
Cut and Fill at Mine Site															
Equipment															
Rough Grading															
D9R Semi-U EROPS (9-43) (3Q02)	17060	64.8	0.1	50.7	228.61	1	228.61	$/HR	118169	CY	184	CY/HR	642.2	HR	146813
Finished Grading															
D9R Semi-U EROPS (9-43) (3Q02)	17060	64.8	0.1	50.7	228.61	1	228.61	$/HR	19926	CY	680	CY/HR	29.3	HR	6698
815F ((6-13) (4Q03))	9140	35.35	0.1	50.7	146.71	1	146.71	$/HR	58490	CY	876	CY/HR	66.8	HR	9800
CAT 345BL 2000 (10-21)(3Q03)	13965	55.25	0.1	50.7	198.76	1	198.76	$/HR	10000	CY	308	CY/HR	32.5	HR	6460
966G EROPS (9-37) (3Q03)	6510	27	0.1	50.7	121.09	1	121.09	$/HR	8342	CY	204	CY/HR	40.9	HR	4953
Support Personel and Labor															
CLAB					40.5	1	40.5	$/HR					642.2	HR	26009
5,000 gal H2O truck Diesel (20-6) (2Q03)	4855	27.95	0.1	40.3	101.39	1	101.39	$/HR					642.2	HR	65113
Pickup Truck Crew 4x4 1 ton (20-7) (2Q03)	875	4.45	0.1	0	10.36	1	10.36	$/HR					642.2	HR	6653
Foreman Average, Outside					55.45	1	55.45	$/HR					642.2	HR	35610

	Equipment Cost	Hourly Operating Costs	Equipment Overhead	Operator's Hourly Wage Rate	Hourly Cost	Number of Men or Eq.	Total Eq. & Lab. Costs	Units	Quantity	Units	Production Rate	Units	Equip. + Labor Time/Dis.	Units	Cost
Dugout Mine Facilities Area 02 Topsoil Disturbution															
Move topsoil															
D9R Semi-U EROPS (9-43) (3Q02)	17060	64.8	0.1	50.7	228.61	1	228.61	$/HR	21460	CY	184	CY/HR	116.6	HR	26656
Pocking Handled in Vegetation Section															
966G EROPS (9-37) (3Q03)	6510	27	0.1	50.7	121.09	1	121.09	$/HR	21460	CY	204	CY/HR	105.2	HR	12739
6X4 75,000lbs 12-18 CY (20-1) (2Q00)	3580	25.05	0.1	38.1	88.03	6	528.18	$/HR	21460	CY	204	CY/HR	105.2	HR	55565
Support Personel and Labor															
CLAB					40.5	1	40.5	$/HR					116.6	HR	4722
5,000 gal H2O truck Diesel (20-6) (2Q03)	4855	27.95	0.1	40.3	101.39	1	101.39	$/HR					116.6	HR	11822
Pickup Truck Crew 4x4 1 ton (20-7) (2Q03)	875	4.45	0.1	0	10.36	1	10.36	$/HR					116.6	HR	1208
Foreman Average, Outside					55.45	1	55.45	$/HR					116.6	HR	6465
Subtotal															119177

	Equipment Cost	Hourly Operating Costs	Equipment Overhead	Operator's Hourly Wage Rate	Hourly Cost	Number of Men or Eq.	Total Eq. & Lab. Costs	Units	Quantity	Units	Production Rate	Units	Equip. + Labor Time/Dis.	Units	Cost
Dugout Mine Stream Channel 03 Remove Culvert and Restore Channel															
CAT 330BL 2001 (10-21)(3Q03)	10530	42.6	0.1	50.7	163.37	1	163.37	$/HR	14400	CY	310	CY/HR	46.5	HR	7597
CLAB					40.5	0.5	20.25	$/HR					46.5	HR	942
966G EROPS (9-37) (3Q03)	6510	27	0.1	50.7	121.09	1	121.09	$/HR	1500	CY	204	CY/HR	7.4	HR	896
CLAB					40.5	0.5	20.25	$/HR					7.4	HR	150
6X4 70,000lbs 12-18 CY (20-1) (2Q03)	3590	25.8	0.1	40.3	91.12	1	91.12	$/HR	7000	CY	50	CY/HR	140	HR	12757
CLAB					40.5	0.5	20.25	$/HR					140	HR	2835
Support															
Foreman Average, Outside					55.45	1	55.45	$/HR					46	HR	2551
5,000 gal H2O truck Diesel (20-8) (2Q03)	4855	27.95	0.1	40.3	101.39	1	101.39	$/HR					46	HR	4664
Pickup Truck Crew 4x4 1 ton (20-7) (2Q03)	875	4.45	0.1	0	10.36	1	10.36	$/HR					46	HR	477
Subtotal															32669

	Equipment Cost	Hourly Operating Costs	Equipment Overhead	Operator's Hourly Wage Rate	Hourly Cost	Number of Men or Eq.	Total Eq. & Lab. Costs	Units	Quantity	Units	Production Rate	Units	Equip. + Labor Time/Dis.	Units	Cost
Refuse Pile 05															
Cut and Fill Refuse Site															
D9R Semi-U EROPS (9-43) (3Q02)	17060	64.8	0.1	50.7	228.61	1	228.61	$/HR	9887	CY	102	CY/HR	96.9	HR	22152
5,000 gal H2O truck Diesel (20-6) (2Q03)	4855	27.95	0.1	40.3	101.39	1	101.39	$/HR					96.9	HR	9825
Pickup Truck Crew 4x4 1 ton (20-7) (2Q03)	875	4.45	0.1	0	10.36	1	10.36	$/HR					96.9	HR	1004
Foreman Average, Outside					53.1	1	53.1	$/HR					96.9	HR	5145
Topsoil Placement															
966G EROPS (9-37) (3Q03)	6510	27	0.1	50.7	121.09	1	121.09	$/HR	36700	CY	204	CY/HR	179.9	HR	21784
Pickup Truck Crew 4x4 1 ton (20-7) (2Q03)	875	4.45	0.1	0	10.36	1	10.36	$/HR					179.9	HR	1864
Foreman Average, Outside					53.1	1	53.1	$/HR					179.9	HR	9553
Subtotal															71327

	Equipment Cost	Hourly Operating Costs	Equipment Overhead	Operator's Hourly Wage Rate	Hourly Cost	Number of Men or Eq.	Total Eq. & Lab. Costs	Units	Quantity	Units	Production Rate	Units	Equip. + Labor Time/Dis.	Units	Cost
Pace Canyon Fan Portal															
Backfill Shaft															
CAT 325BL (10-21)(2nd04)	9170	35.55	0.1	52	148.42	1	148.42	$/HR	641	CY	216	CY/HR	3	HR	445
6X4 70,000lbs 12-18 CY (20-11) (1Q04)	3600	25.75	0.1	42	92.83	3	278.49						3	HR	835
Trucking Topsoil															
CAT 325BL (10-21)(2nd04)	9170	35.55	0.1	52	148.42	1	148.42	$/HR	922	CY	150	CY/HR	6.1	HR	905
6X4 70,000lbs 12-18 CY (20-11) (1Q04)	3600	25.75	0.1	42	92.83	13	1206.79						6.1	HR	7361
Backfill Portal															
D8R Series II Semi-U EROPS (9-55) (2nd04)	13720	53.4	0.1	52	196.49	1	196.49	$/HR	331	CY	171	CY/HR	1.9	HR	373
Subsoil Placement															
D8R Series II Semi-U EROPS (9-55) (2nd04)	13720	53.4	0.1	52	196.49	1	196.49	$/HR	3900	CY	90	CY/HR	43.3	HR	8508
Doze On -site Topsoil															
D8R Series II Semi-U EROPS (9-55) (2nd04)	13720	53.4	0.1	52	196.49	1	196.49	$/HR	1206	CY	480	CY/HR	2.5	HR	491
Doze Trucked Topsoil															
D8R Series II Semi-U EROPS (9-55) (2nd04)	13720	53.4	0.1	52	196.49	1	196.49	$/HR	922	CY	171	CY/HR	5.4	HR	1061
Subtotal															19679

Ref.	Description	Materials	Means Reference Number	Unit Cost	Unit	Length	Width	Height	Diameter	Area	Volume	Weight	Density	Time	Number	Unit	Swell Factor	Quantity	Unit	Cost
	Dugout Mine Vegetation																			155471
	Dugout Mine Refuse Pile																			88116
	Degas Well G2																			6355
	Degas Well G3																			6355
	Degas Well G4																			6355
	Degas Well G5																			6355
	Degas Well G6																			6355
	Degas Well G45																			101275
	Pace Canyon Fan Portal																			7358
	Total																			383536

Ref.	Description	Materials	Reference Number	Unit Cost	Unit	Length	Width	Height	Diameter	Area	Volume	Weight	Density	Time	Number	Unit	Swell Factor	Quantity	Unit	Cost
	Dugout Mine Vegetation																			
	Soil Preparation																			
	Pocking	Excavation Bulk Bank 2 CY (322BL)	02315 424 0260	1.68	/CY					14.56						AC		23490	CY	39463
	Subtotal																			39463
	Fence																			
	Silt Fence	Silt fence	02370 700 1100	1.01	LF	6800										FT		6800	FT	6868
	Chicken Wire	Fence Chicken Wire	02820 410 0012	6.55	LF	3400										FT		3400	FT	22270
	Subtotal																			29138
	Seed Mix No 1																			
	Hydroseed Equipment and Labor	Hydro Spreader (equip. & labor) B-81 80MS	Reveg002	18.8	/MSF					13.9						AC		605	MSF	11374
	Hydroseed Material	Dugout Seed Mix No 1	Dugout 07391S	394.75	/AC					13.9						AC		13.9	AC	5487
	Hay Mulch	Hay material only 02370 700 1200	Reveg001R	57.2	/ton					13.9						AC		13.9	ton/AC	795
	Transplant Area No 1																			
	Area																			
	Transplant Materials	Dugout Transplant Mix No 1	Dugout 07391T	349	/AC					13.9						AC		13.9	AC	4851
	Transplant Labor	Bare root seedlings, 6" to 10"	02912 350 0711	1.21	Ea										550	#/AC		7645	EA	9250
	Seed Mix No 2																			
	Hydroseed Equipment and Labor	Hydro Spreader (equip. & labor) B-81 80MS	Reveg002	18.8	/MSF					2.45						AC		107	MSF	2012
	Hydroseed Material	Dugout Seed Mix No 2	Dugout 07392S	711.25	/AC					2.45						AC		2.45	AC	1743
	Hay Mulch	Hay material only 02370 700 1200	Reveg001R	57.2	/ton					2.45						AC		2.45	ton/AC	140
	Transplant Area No 2																			
	Area																			
	Transplant Materials	Dugout Transplant Mix No 1	Dugout 07391T	349	/AC					2.45						AC		2.45	AC	855
	Transplant Labor	Bare root seedlings, 6" to 10"	02912 350 0711	1.21	Ea										6500	#/AC		15925	EA	19269
	Subtotal																			55778
	Direct Vegetation																			124377
	Reseeding																			
	Assume 25% reveg rate																			[illegible]
	Total																			155471

Ref.	Description	Materials	Reference Number	Unit Cost	Unit	Length	Width	Height	Diameter	Area	Volume	Weight	Density	Time	Number	Unit	Swell Factor	Quantity	Unit	Cost
	Dugout Mine Refuse Pile																			
	Soil Preparation																			
	Pocking	Excavation Bulk Bank 2 CY (322BL)	02315 400 0260	1.73	/CY					15.6						AC		25168	CY	43541
	Subtotal																			43541
	Seed Mix No 1																			
	Hydroseed Equipment and Labor	Hydro Spreader (equip. & labor) B-81 80MS	Reveg002	18.8	/MSF					15.6						AC		680	MSF	12784
	Hydroseed Material	Dugout Seed Mix No 1	Dugout 07391S	394.75	/AC					15.6						AC		15.6	AC	6158
	Hay Mulch	Hay material only 02370 700 1200	Reveg001R	57.2	/ton					15.6						AC		15.6	ton/AC	892
	Transplant Area No 1																			
	Area																			
	Transplant Materials	Dugout Transplant Mix No 1	Dugout 07391T	349	/AC					15.6						AC		15.6	AC	5444
	Transplant Labor	Bare root seedlings, 6" to 10"	02912 350 0711	1.21	Ea										550	#/AC		8580	EA	10382
	Subtotal																			35060
	Reseeding																			
	Assume 25% reveg rate																			8915
	Subtotal																			[illegible]
	Total																			[illegible]

Ref.	Description	Materials	Reference Number	Unit Cost	Unit	Length	Width	Height	Diameter	Area	Volume	Weight	Density	Time	Number	Unit	Swell Factor	Quantity	Unit	Cost
	Degas Well G2																			
	Soil Preparation																			
	Pocking	Excavation Bulk Bank 2 CY (322BL)	02315 400 0260	1.73	/CY					1						AC		1613	CY	2790
	Subtotal																			2790
	Seed Mix No 1																			
	Hydroseed Equipment and Labor	Hydro Spreader (equip. & labor) B-81 80MS	Reveg002	18.8	/MSF					1						AC		44	MSF	827
	Hydroseed Material	Dugout Seed Mix No 1	Dugout 07391S	394.75	/AC					1						AC		1	AC	395
	Hay Mulch	Hay material only 02370 700 1200	Reveg001R	57.2	/ton					1						AC		1	ton/AC	57
	Transplant Area No 1																			
	Area																			
	Transplant Materials	Dugout Transplant Mix No 1	Dugout 07391T	349	/AC					1						AC		1	AC	349
	Transplant Labor	Bare root seedlings, 6" to 10"	02912 350 0711	1.21	Ea										550	#/AC		550	EA	666
	Direct Vegetation																			5084
	Reseeding																			
	Total																			5355

Ref.	Description	Materials	Reference Number	Unit Cost	Unit	Length	Width	Height	Diameter	Area	Volume	Weight	Density	Time	Number	Unit	Swell Factor	Quantity	Unit	Cost
	Degas Well G3																			
	Soil Preparation																			
	Pocking	Excavation Bulk Bank 2 CY (322BL)	02315 400 0260	1.73	/CY					1						AC		1613	CY	2790
	Subtotal																			2790
	Seed Mix No 1																			
	Hydroseed Equipment and Labor	Hydro Spreader (equip. & labor) B-81 80MS	Reveg002	18.8	/MSF					1						AC		44	MSF	827
	Hydroseed Material	Dugout Seed Mix No 1	Dugout 07391S	394.75	/AC					1						AC		1	AC	395
	Hay Mulch	Hay material only 02370 700 1200	Reveg001R	57.2	/ton					1						AC		1	ton/AC	57
	Transplant Area No 1																			
	Area																			
	Transplant Materials	Dugout Transplant Mix No 1	Dugout 07391T	349	/AC					1						AC		1	AC	349
	Transplant Labor	Bare root seedlings, 6" to 10"	02912 350 0711	1.21	Ea										550	#/AC		550	EA	666
	Subtotal																			2294
	[illegible]																			[illegible]
	Reseeding																			
	Assuming 25% reseed rate																			771
	Total																			6355

Ref.	Description	Materials	Reference Number	Unit Cost	Unit	Length	Width	Height	Diameter	Area	Volume	Weight	Density	Time	Number	Unit	Swell Factor	Quantity	Unit	Cost
	Degas Well G4																			
	Soil Preparation																			
	Pocking	Excavation Bulk Bank 2 CY (322BL)	02315 400 0260	1.73	/CY					1						AC		1613	CY	2790
	Subtotal																			2790
	Seed Mix No 1																			
	Hydroseed Equipment and Labor	Hydro Spreader (equip. & labor) B-81 80MS	Reveg002	18.8	/MSF					1						AC		44	MSF	827
	Hydroseed Material	Dugout Seed Mix No 1	Dugout 07391S	394.75	/AC					1						AC		1	AC	395
	Hay Mulch	Hay material only 02370 700 1200	Reveg001R	57.2	/ton					1						AC		1	ton/AC	57
	Transplant Area No 1																			
	Area																			
	Transplant Materials	Dugout Transplant Mix No 1	Dugout 07391T	349	/AC					1						AC		1	AC	349
	Transplant Labor	Bare root seedlings, 6" to 10"	02912 350 0711	1.21	Ea										550	#/AC		550	EA	666
	Subtotal																			2284
	Other Vegetation																			6084
	Reseeding																			
	[illegible]																			[illegible]
	Total																			8365

Ref.	Description	Materials	Reference Number	Unit Cost	Unit	Length	Width	Height	Diameter	Area	Volume	Weight	Density	Time	Number	Unit	Swell Factor	Quantity	Unit	Cost
	Degas Well G5																			
	Soil Preparation																			
	Pocking	Excavation Bulk Bank 2 CY (322BL)	02315 400 0260	1.73	/CY					1						AC		1613	CY	2790
	Subtotal																			2790
	Seed Mix No 1																			
	Hydroseed Equipment and Labor	Hydro Spreader (equip. & labor) B-81 80MS	Reveg002	18.8	/MSF					1						AC		44	MSF	827
	Hydroseed Material	Dugout Seed Mix No 1	Dugout 07391S	394.75	/AC					1						AC		1	AC	395
	Hay Mulch	Hay material only 02370 700 1200	Reveg001R	57.2	/ton					1						AC		1	ton/AC	57
	Transplant Area No 1																			
	Area																			
	Transplant Materials	Dugout Transplant Mix No 1	Dugout 07391T	349	/AC					1						AC		1	AC	349
	Transplant Labor	Bare root seedlings, 6" to 10"	02912 350 0711	1.21	Ea										550	#/AC		550	EA	666
	Subtotal																			2266
	Direct Vegetation																			5056
	Reseeding																			
	Assume 25% reseed rate																			1264
	Total																			6320

Ref.	Description	Materials	Reference Number	Unit Cost	Unit	Length	Width	Height	Diameter	Area	Volume	Weight	Density	Time	Number	Unit	Swell Factor	Quantity	Unit	Cost
	Degas Well G6																			
	Soil Preparation																			
	Pocking	Excavation Bulk Bank 2 CY (322BL)	02315 400 0260	1.73	/CY					1						AC		1613	CY	2790
	Subtotal																			2790
	Seed Mix No 1																			
	Hydroseed Equipment and Labor	Hydro Spreader (equip. & labor) B-81 80MS	Reveg002	18.8	/MSF					1						AC		44	MSF	827
	Hydroseed Material	Dugout Seed Mix No 1	Dugout 07391S	394.75	/AC					1						AC		1	AC	395
	Hay Mulch	Hay material only 02370 700 1200	Reveg001R	57.2	/ton					1						AC		1	ton/AC	57
	Transplant Area No 1																			
	Area																			
	Transplant Materials	Dugout Transplant Mix No 1	Dugout 07391T	349	/AC					1						AC		1	AC	349
	Transplant Labor	Bare root seedlings, 6" to 10"	02912 350 0711	1.21	Ea										550	#/AC		550	EA	666
	Subtotal																			2294
	Direct Vegetation																			5084
	Reseeding																			
	Allowance 25% (level one)																			1271
	Total																			6355

Ref.	Description	Materials	Reference Number	Unit Cost	Unit	Length	Width	Height	Diameter	Area	Volume	Weight	Density	Time	Number	Unit	Swell Factor	Quantity	Unit	Cost
	Degas Well G45																			
	Soil Preparation																			
	Pocking	Excavation Bulk Bank 2 CY (322BL)	02315 400 0260	1.73	/CY					19.7						AC		31783	CY	54985
	Subtotal																			54985
	Seed Mix No 1																			
	Hydroseed Equipment and Labor	Hydro Spreader (equip. & labor) B-81 80MS	Reveg002	18.8	/MSF					19.7						AC		858	MSF	16130
	Hydroseed Material	Dugout Seed Mix No 1	Dugout 07391S	394.75	/AC					19.7						AC		19.7	AC	7777
	Hay Mulch	Hay material only 02370 700 1200	Reveg001R	57.2	/ton					19.7						AC		19.7	ton/AC	1127
	Transplant Area No 1																			
	Area																			
	Transplant Materials	Dugout Transplant Mix No 1	Dugout 07391T	349	/AC					19.7						AC		19.7	AC	6875
	Transplant Labor	Bare root seedlings, 6" to 10"	02912 350 0711	1.21	Ea										550	#/AC		10835	EA	13110
	Subtotal																			45010
	Reseeding																			
	[illegible]																			[illegible]
	Total																			101275

Ref.	Description	Materials	Reference Number	Unit Cost	Unit	Length	Width	Height	Diameter	Area	Volume	Weight	Density	Time	Number	Unit	Swell Factor	Quantity	Unit	Cost
	Pace Canyon Fan Portal																			
	Soil Preparation																			
	Pocking	Excavation Bulk Bank 2 CY (322BL)	02315 400 0260	1.73	/CY					1.5						AC		2420	CY	4187
	Subtotal																			4187
	Seed Mix No 1																			
	Hydroseed Equipment and Labor	Hydro Spreader (equip. & labor) B-81 80MS	Reveg002	18.8	/MSF					1.5						AC		65	MSF	1222
	Hydroseed Material	Dugout Seed Mix No 1	Dugout 07391S	394.75	/AC					1.5						AC		1.5	AC	592
	Hay Mulch	Hay material only 02370 700 1200	Reveg001R	57.2	/ton					1.5						AC		1.5	ton/AC	86
	Subtotal																			1900
	Direct Vegetation																			
	Reseeding																			
	Assume 25% reveg rate																			
	Total																			7538

APPENDIX 5-9

Dugout Canyon Mine Blasting Plan

BLASTING PLAN
PACE CANYON

LOCATION: Pace Canyon, approximately 7 miles east of Wellington, Utah and approximately 11 miles north of State Hwy 6 &50

CFC has determined that it is necessary to enhance the mine ventilation system of the Dugout Canyon Mine. The proposed enhancement is an eighteen to twenty foot diameter air shaft having a developed depth of approximately seventy feet. The shaft will connect the underground mine workings and the surface ventilation fan ducting. The shaft will be developed in native sandstone of the Blackhawk formation.

There are no structures within ½ mile of the blast site which would require protection. There are no dwellings, public buildings, schools, churches, or community or institutional building within 1000 feet of the blast area. Therefore, there is no need to notify residents or owners of dwellings in writing relative as to how to request a pre-blast survey.

Although there are no residents within one-half mile of the blast site, the permittee will notify the adjacent landowners (Trustee of Milton and Ardith Thayn Trust) and the Carbon County Sheriff's Office via a written notification indicating the proposed times for blasting. Following initiation of the blasting process, those listed above will be notified at least 24 hours prior to blasting via telephone communication. A record of that telephone notification will be maintained for inclusion in the blasting record.

Access control measures mandated under R645-301-524.530 will involve placing traffic control personnel one half mile above and below the blast site on the Pace Canyon road, and underground in the Dugout Canyon Mine a minimum of 1,000 feet from the blast site. These individuals will stop livestock, unauthorized personnel, and CFC mine personnel from venturing into the blasting area.. All areas will post "blasting signs" meeting the criteria of R645-301-524, et al. Following the blast, the Utah certified coal mine surface blaster, or the Industrial Commission of Utah certified mine foreman or firebosswill examine the blast site for unusual hazards (R645-301-524.531) such as imminent slides, or charges not detonated, and that access to and travel within the blasting area can be safely resumed (524.532). A record of that underground examination will be made as designated by regulation.

The fan portal blasting activities will be conducted within 500 feet of an active coal mine and if applicable, both UDOGM and MSHA will authorized the blasting. A blast design narrative addressing UDOGM and OSM regulations (R645-301-524.212 and 30 CFR 780.13(c) and 816.61 (d) (1) (ii)) is provided below.

R645-301-524.100 through R645-301-524.700 apply to surface blasting activities incident to underground coal mining, including, but not limited to, initial rounds of slopes and shafts. Thus the requirements of the aforementioned UDOGM regulations are pertinent to the first two six foot development rounds in the shaft. At the depth of 12 feet, the 30 CFR Part 75 regulations become applicable. These regulations include requirements for ventilating the working face.

A blast pattern design has been prepared which will give adequate results for the development of a eighteen to twenty foot diameter air shaft. The design was determined based upon a final circular dimension of twenty feet, including either a concrete or metal lining in the shaft.

Each blast round will break approximately six feet of material; twelve to fourteen rounds will be needed to break through to the underground works. In order to do this, an inverted cone of rock will be outlined using eight holes having a diameter of one and five-eights inch. Each of eight holes will be started approximately 5 feet from center, and will be drilled on a twenty-seven degree angle toward center for a total depth of 6 3/4 feet. The hole bottom will be no closer than eighteen inches to any other hole bottom, meeting the requirement of 30 CFR 75.1315, paragraph (c). The inverted cone can also be referred to as a "pyramid cut". The purpose of the pyramid cut is to eliminate the need for a large diameter borehole in the center of the entry or "burn hole". This in turn reduces equipment requirements.

Approximately 17 inches from the top of the pyramid cut holes, eight "first relievers" will be developed angled slightly towards the cent of the shaft. Seventeen inches from the circle outlined by the first relievers, a circle of sixteen holes will be drilled to a six foot depth, in a vertical fashion. These are the "secondary relievers".

Seventeen inches from the "secondary relievers" are the "trim holes", which will be nine inches from the outside arc of the cut. There will be twenty-eight trim holes, each having a six foot depth. The hole will be angled out at the bottom, at about seven degrees from vertical, such that the bottom of the hole is at the outside radius of the cut, (extended from the vertical side of the developed hole).

The explosive used will meet the following specifications;

1. a MSHA "permissible explosive", approved for the specific type of blasting,
2. cartridge type, approximately 11/4 inches in diameter, eight inch long and with a uniform density of approximately 7.27 ounces per cartridge.

There should be no flyrock generated by the construction blasts being used to develop the Pace Canyon air shaft because all boreholes will be stemmed with noncombustible material.

The amount of explosives which will be used per round to develop the air shaft in Pace Canyon is minuscule compared to the magnitude of blasts which are the intent of the R645-301-524 regulations.

Various forms to be used in association with blasting are presented below.

DUGOUT CANYON MINE
PACE CANYON FAN PORTAL FACILITIES - BLAST DESIGN

TYPE OF MATERIAL: _____

TYPE OF BLASTING CAP: _____

TYPE OF PRIMER: _____

TYPE OF EXPLOSIVE: _____

SIZE OF HOLE: _____

DEPTH OF HOLE: _____

BURDEN: _____

STEMMING: _____

SEQUENCE: _____

BLASTER'S NAME (PRINT): _____

BLASTER'S SIGNATURE: _____

CROSS SECTION OF CRT

USE OF EXPLOSIVES
RECORDS OF BLASTING OPERATIONS

NAME OF OPERATOR CONDUCTING THE BLAST:	DATE AND TIME OF BLAST:
DURATION:	LICENSE NUMBER:
SIGNATURE OF BLASTER IN CHARGE:	
DIRECTION AND DISTANCE FROM NEAREST BLAST HOLE TO THE NERAEST DWELLING, PUBLIC BUILDING, SCHOOL, CHURCH, COMMUNITY OR INSTITUTIONAL BUILDING OUTSIDE PERMIT AREA.	
WEATHER CONDITIONS:	
WIND DIRECTION AND APPROXIMATE VELOCITY:	TEMPERATURE:
NUMBER OF HOLES, BURDEN AND SPACING (Sketch Below)	TYPE OF MATERIAL BLASTED:
DIAMETER AND DEPTH OF HOLES:	TYPES OF EXPLOSIVES USED:
TOTAL WEIGHT OF EXPLOSIVES USED:	MAXIMUM WEIGHT OF EXPLOSIVES DETONATED WITHIN ANY 8-MILLISECOND PERIOD:
INITIATION SYSTEM:	TYPE AND LENGTH OF STEMMING:
MATS OR OTHER PROTECTION USED:	
IF APPLICABLE:	
TYPE OF SEISMOGRAPHIC INSTRUMENT, SENSITIVITY, AND CALIBRATION SIGNAL:	
EXACT LOCATION OF INSTRUMENT:	DATE, TIME AND DISTANCE FROM BLAST:
NAME OF PERSON AND COMPANY TAKING READING:	
NAME OF PERSON AND COMPANY ANALYZING RECORD:	
VIBRATION AND/OR BLAST LEVEL RECORDED:	
REASON FOR SCHEDULED BLAST:	
SKETCH OF BLAST PATTERN:	

DUGOUT CANYON MINE
P.O. BOX 1029
WELLINGTON, UT 84542
TELEPHONE: (435) 637-6360

BLASTING SCHEDULE

DATE TIME PERIOD

INFORMATION TO BE COMPLETED ONCE BLASTING SCHEDULE IS DETERMINED.

The blasting site is located in Pace Canyon, approximately 7 miles east of Wellington, Utah and approximately 11 miles north of State Hwy 6 &50. An area will be blasted to establish a shaft to the Dugout Mine's underground workings in the Gilson Coal Seam.

Audible Signals: Warning: Three short horn blasts. All Clear: One long horn blast.

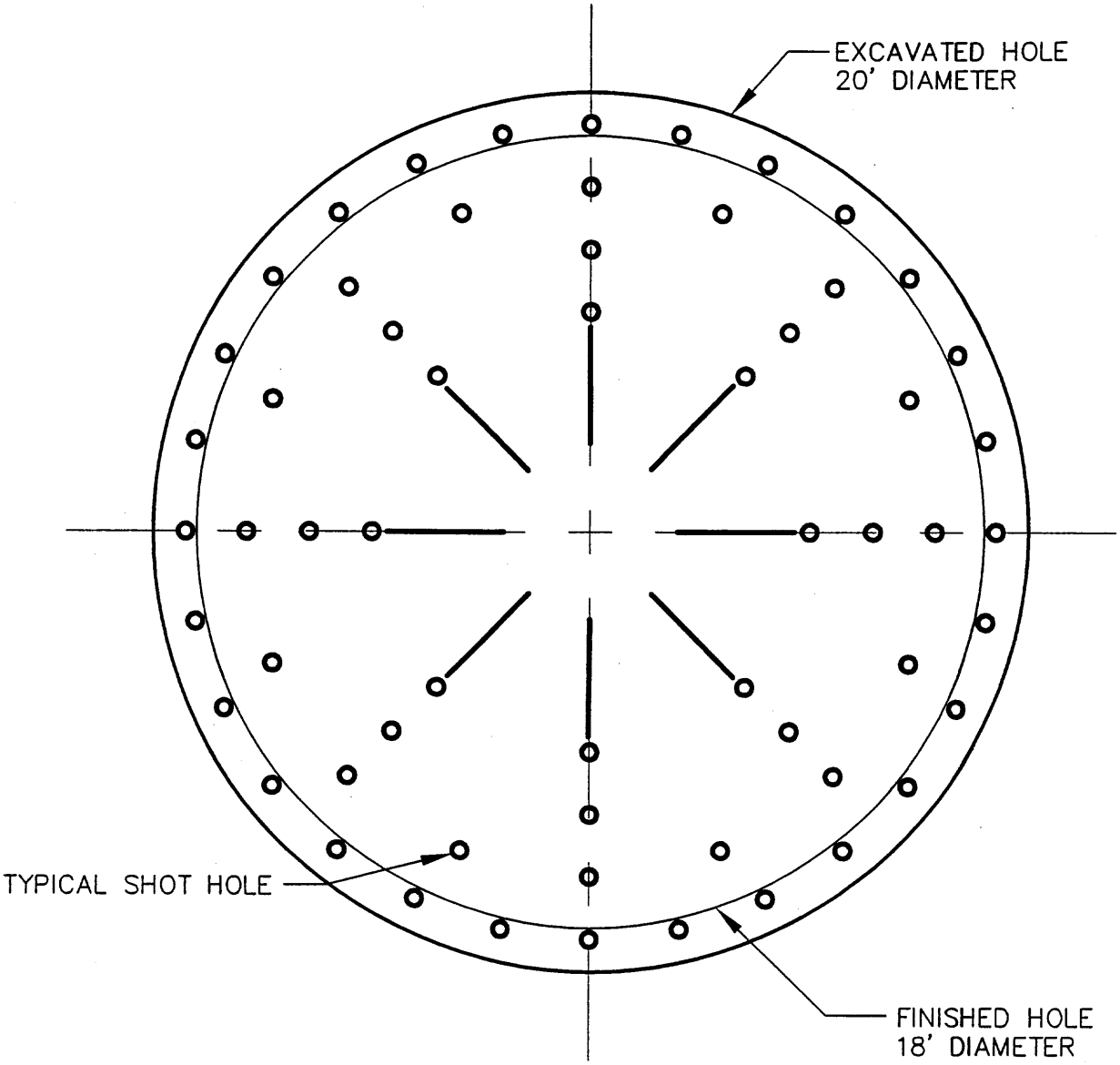

NOTES:

1. PATTERN MAY VARY WHEN EXCAVATION NEARS THE BOTTOM OF THE SHAFT.
2. SHOT HOLES ARE 6' TO 7' DEEP DEPENDING ON DRILLING ANGLE.

NOT TO SCALE

FIGURE 1. TYPICAL SHOT PATTERN FOR VENTILATION SHAFT

EarthFax

BLASTING PLAN
PACE CANYON - Competent Material and Boulders

LOCATION: Pace Canyon, approximately 7 miles east of Wellington, Utah and approximately 11 miles north of State Hwy 6 &50

CFC has determined that it is necessary to enhance the mine ventilation system of the Dugout Canyon Mine. The intake portal and escape way portal will be constructed by excavating the hillside slope down to where a competent material is encountered. The competent material may be bedrock or the coal seam and the depth is unknown. In addition, there may be boulders on site which may require blasting to make them small enough to move. This blasting plan is in preparation for there being competent material which may require blasting.

There are no structures within ½ mile of the blast site which would require protection. There are no dwellings, public buildings, schools, churches, or community or institutional building within 1000 feet of the blast area. Therefore, there is no need to notify residents or owners of dwellings in writing relative as to how to request a pre-blast survey.

Although there are no residents within one-half mile of the blast site, the permittee will notify the adjacent landowners (Trustee of Milton and Ardith Thayn Trust) and the Carbon County Sheriff's Office via a written notification indicating the proposed times for blasting. Following initiation of the blasting process, those listed above will be notified at least 24 hours prior to blasting via telephone communication. A record of that telephone notification will be maintained for inclusion in the blasting record.

Access control measures mandated under R645-301-524.530 will involve placing traffic control personnel one half mile above and below the blast site on the Pace Canyon road, and underground in the Dugout Canyon Mine a minimum of 1,000 feet from the blast site. These individuals will stop livestock, unauthorized personnel, and CFC mine personnel from venturing into the blasting area.. All areas will post "blasting signs" meeting the criteria of R645-301-524, et al. Following the blast, the Utah certified coal mine surface blaster, or the Industrial Commission of Utah certified mine foreman or firebosswill examine the blast site for unusual hazards (R645-301-524.531) such as imminent slides, or charges not detonated, and that access to and travel within the blasting area can be safely resumed (524.532). A record of that underground examination will be made as designated by regulation.

The fan portal blasting activities will be conducted within 500 feet of an active coal mine and if applicable, both UDOGM and MSHA will authorized the blasting. A blast design narrative addressing UDOGM and OSM regulations (R645-301-524.212 and 30 CFR 780.13(c) and 816.61 (d) (1) (ii)) is provided below.

R645-301-524.100 through R645-301-524.700 apply to surface blasting activities incident to underground coal mining, including, but not limited to, initial rounds of slopes and shafts. Thus the requirements of the aforementioned UDOGM regulations are pertinent to the first two six foot development rounds in the shaft. At the depth of 12 feet, the 30 CFR Part 75

regulations become applicable. These regulations include requirements for ventilating the working face.

Dugout Canyon Mine is unable to determine if blasting will be necessary until construction begins, therefore the description of blasting patterns cannot be provided in this plan. The blast pattern design will be prepared as needed to accomplish the given task. Individual design(s) will be provided for each task on the **"BLAST DESIGN** and **USE OF EXPLOSIVES RECORDS OF BLASTING OPERATIONS"** forms attached to this plan. The completed forms will be retained with the blasting records for the Dugout Canyon Mine.

The explosive used will meet the following specifications;

1. a MSHA "permissible explosive", approved for the specific type of blasting,
2. cartridge type, approximately 11/4 inches in diameter, eight inch long and with a uniform density of approximately 7.27 ounces per cartridge.

There should be no flyrock generated by the blasts being used to develop the Pace Canyon portal(s) and surface facilities. However, flyrock matting will be on site and used by the certified blasting personnel when determined necessary.

The amount of explosives which will be used per round to develop the portal and facilities in Pace Canyon is minuscule compared to the magnitude of blasts which are the intent of the R645-301-524 regulations.

Various forms to be used in association with blasting are presented below.

DUGOUT CANYON MINE
PACE CANYON FAN PORTAL FACILITIES - BLAST DESIGN

TYPE OF MATERIAL: _____

TYPE OF BLASTING CAP: _____

TYPE OF PRIMER: _____

TYPE OF EXPLOSIVE: _____

SIZE OF HOLE: _____

DEPTH OF HOLE: _____

BURDEN: _____

STEMMING: _____

SEQUENCE: _____

BLASTER'S NAME (PRINT): _____

BLASTER'S SIGNATURE: _____

CROSS SECTION OF CRT

USE OF EXPLOSIVES
RECORDS OF BLASTING OPERATIONS

NAME OF OPERATOR CONDUCTING THE BLAST:	DATE AND TIME OF BLAST:
DURATION:	LICENSE NUMBER:
SIGNATURE OF BLASTER IN CHARGE:	
DIRECTION AND DISTANCE FROM NEAREST BLAST HOLE TO THE NERAEST DWELLING, PUBLIC BUILDING, SCHOOL, CHURCH, COMMUNITY OR INSTITUTIONAL BUILDING OUTSIDE PERMIT AREA.	
WEATHER CONDITIONS:	
WIND DIRECTION AND APPROXIMATE VELOCITY:	TEMPERATURE:
NUMBER OF HOLES, BURDEN AND SPACING (Sketch Below)	TYPE OF MATERIAL BLASTED:
DIAMETER AND DEPTH OF HOLES:	TYPES OF EXPLOSIVES USED:
TOTAL WEIGHT OF EXPLOSIVES USED:	MAXIMUM WEIGHT OF EXPLOSIVES DETONATED WITHIN ANY 8-MILLISECOND PERIOD:
INITIATION SYSTEM:	TYPE AND LENGTH OF STEMMING:
MATS OR OTHER PROTECTION USED:	
IF APPLICABLE:	
TYPE OF SEISMOGRAPHIC INSTRUMENT, SENSITIVITY, AND CALIBRATION SIGNAL:	
EXACT LOCATION OF INSTRUMENT:	DATE, TIME AND DISTANCE FROM BLAST:
NAME OF PERSON AND COMPANY TAKING READING:	
NAME OF PERSON AND COMPANY ANALYZING RECORD:	
VIBRATION AND/OR BLAST LEVEL RECORDED:	
REASON FOR SCHEDULED BLAST:	

SKETCH OF BLAST PATTERN:

DUGOUT CANYON MINE
P.O. BOX 1029
WELLINGTON, UT 84542
TELEPHONE: (435) 637-6360

BLASTING SCHEDULE

DATE TIME PERIOD

INFORMATION TO BE COMPLETED ONCE BLASTING SCHEDULE IS DETERMINED.

The blasting site is located in Pace Canyon, approximately 7 miles east of Wellington, Utah and approximately 11 miles north of State Hwy 6 &50. An area will be blasted to establish surface facilities and a portal associated with the Dugout Mine's underground workings in the Gilson Coal Seam.

Audible Signals: Warning: Three short horn blasts. All Clear: One long horn blast.

APPENDIX 5-10

Pace Canyon Fan Facilities

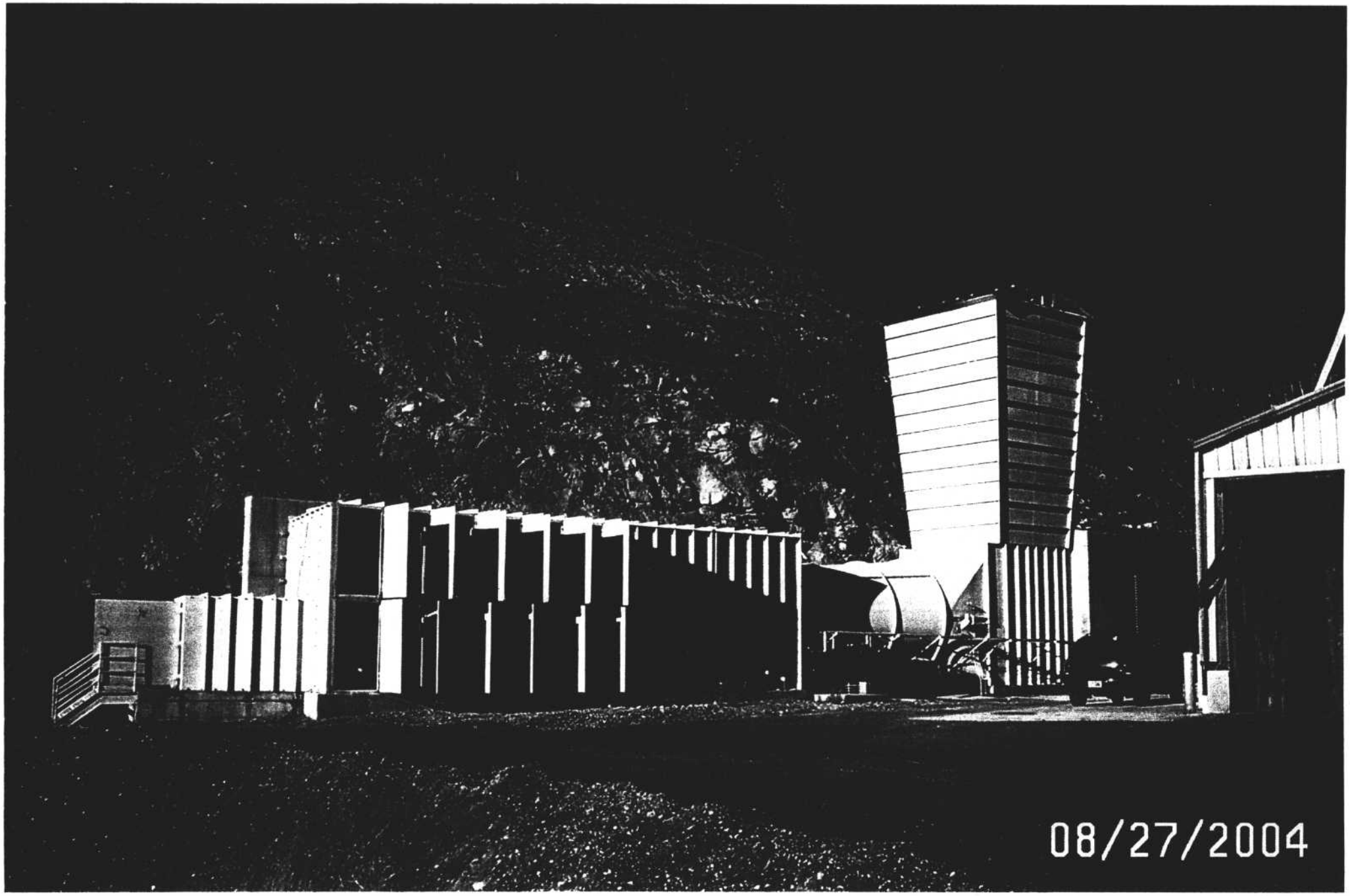
08/27/2004

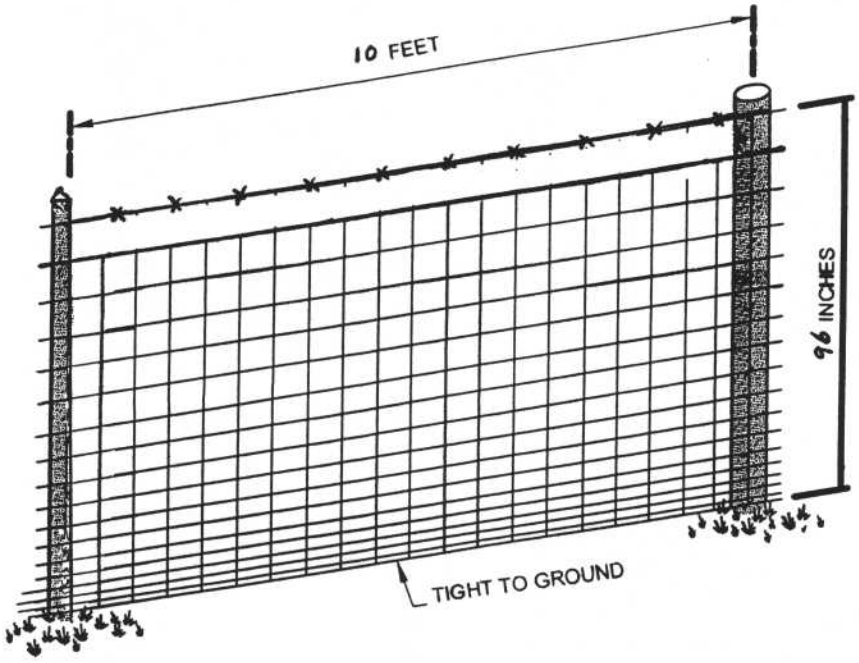

WOVEN WIRE EXCLUSION FENCE - Division of Wildlife Resource, Ron Hodson

USE: Exclude wildlife and livestock

WIRE: Woven mesh 6 to 8 inch spaced verticals. Single row barbed wire at top of woven mesh. Two pieces of woven mesh will be placed vertically on top of one another, wired together and attached to the post. The height at the top of the mesh will be 91 inches, with the barbed wire placed 5 inches above the top of the mesh.

POSTS: Spaced every 10 feet, four metal posts, with every 5th post being 6" diameter wood.

HEIGHT: 96 inches at top of barbed wire

H - BRACES: Every 200 feet and at corners

All dimensions are approximate, due to variable supplies/suppliers and terrain.

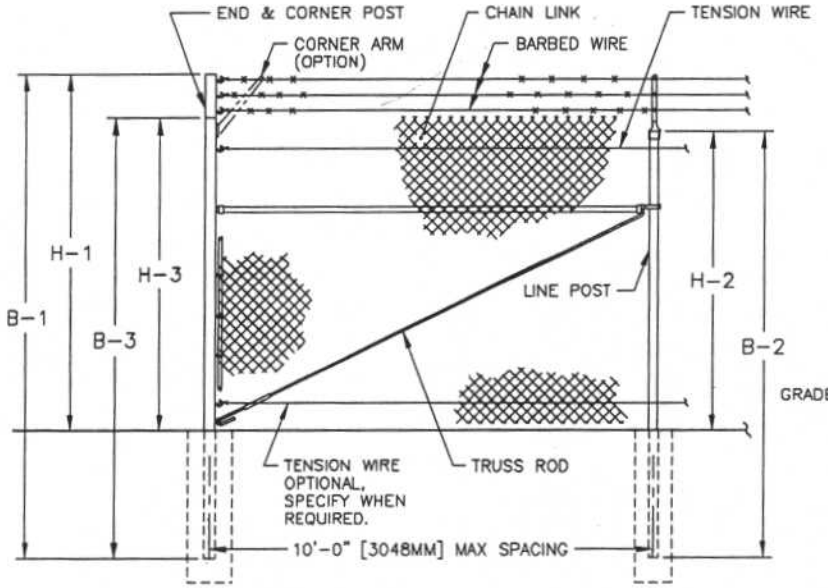

FENCE SECTION ELEVATION

WITHOUT TOP RAIL & WITH BARBED WIRE

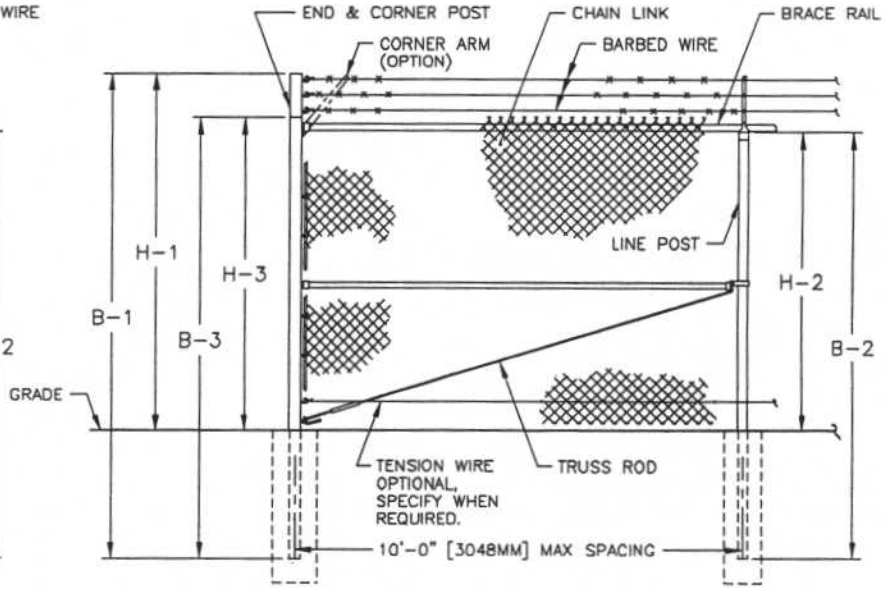

FENCE SECTION ELEVATION

WITH TOP RAIL & WITH BARBED WIRE

FENCE HEIGHT	UPRIGHT END & CORNER POSTS		LINE POSTS		CORNER POSTS WITH CORNER ARM	
NOM HT INCLUDING BARBED WIRE	B-1 BAR LENGTH	H-1 HEIGHT ABOVE GRADE	B-2 BAR LENGTH	H-2 HEIGHT ABOVE GRADE	B-3 BAR LENGTH	H-3 HEIGHT ABOVE GRADE
7'-0" [2134MM]	10'-0" [3048MM]	7'-0 5/8" [2150MM]	8'-8" [2642MM]	5'-8 7/8" [1749MM]	9'-0" [2743MM]	6'-0 5/8" [1845MM]
8'-0" [2438MM]	11'-0" [3353MM]	8'-0 5/8" [2454MM]	9'-8" [2946MM]	6'-8 7/8" [2054MM]	10'-0" [3048MM]	7'-0 5/8" [2150MM]
9'-0" [2743MM]	12'-0" [3658MM]	9'-0 5/8" [2759MM]	10'-8" [3251MM]	7'-8 7/8" [2359MM]	11'-0" [3353MM]	8'-0 5/8" [2454MM]
10'-0" [3048MM]	13'-0" [3962MM]	10'-0 5/8" [3064MM]	11'-8" [3556MM]	8'-8 7/8" [2664MM]	12'-0" [3658MM]	9'-0 5/8" [2759MM]
11'-0" [3353MM]	14'-0" [4267MM]	11'-0 5/8" [3369MM]	12'-8" [3861MM]	9'-8 7/8" [2969MM]	13'-0" [3962MM]	10'-0 5/8" [3064MM]
12'-0" [3658MM]	15'-0" [4572MM]	12'-0 5/8" [3674MM]	13'-8" [4166MM]	10'-8 7/8" [3273MM]	14'-0" [4267MM]	11'-0 5/8" [3369MM]

NOTES:
1. THIS DWG CORRESPONDS WITH DWGS 1-1020, 1-1040, 1-1120 & 1-1140.
2. SPECIFICATIONS SHOWN CAN BE CHANGED BY MASTER-HALCO ONLY.

ANCHOR FENCE Products

COPYRIGHT © 2001 MASTER-HALCO, INC. ALL RIGHTS RESERVED.

by Master-Halco

TYPICAL HIGH FENCE WITH BARBED WIRE

DIMENSIONS & SPECIFICATIONS

BY:	JRR	DWG:	1-1001
DATE:	09-27-95		
REV:	B	LAYER:	1
REV DATE:	06-04-98	SCALE:	1/4" = 1'-0"

CHAIN LINK FENCE FRAMEWORK SELECTIONS

Framing Members			Type I Round Pipe	Type II Round Pipe	Square Sections	Formed "C" Sections
Terminal Posts: end, Corner, and Pull (based on fabric height)						
6 ft (1830 mm) or less	Outside Dim.	(inches)	2.375	2.375	2.00 x 2.00	
		(mm)	60.3	60.3	50 x 50	
	Wall thickness	inches)	0.154	0.130	0.095	
		(mm)	3.91	3.30	2.41	
	Weight	(lb/ft)	3.65	3.117	2.60	
		(kg/m)	5.4	4.64	3.87	
over 6ft (1830 mm)	Outside Dim.	(Inches)	2.875	2.873	2.50 x 2.50	
		(mm)	73.0	73.0	63.5 x 63.5	
	Wall thickness	(inches)	0.203	0.160	0.1875	
		(mm)	5.16	4.06	4.76	
	Weight	(lb/ft)	9.11	6.56	5.10	
		(kg/m)	13.6	9.78	7.59	
Line Posts (based on fabric height)						
6ft (1830 mm) or less	Outside Dim.	(Inches)	1.900	1.900		1.875 x 1.625
		(mm)	48.3	48.3		47.63 x 41.28
	Wall thickness	(Inches)	0.145	0.120		0.121
		(mm)	3.68	3.05		3.07
	Weight	(lb/ft)	2.72	2.281		2.26
		(kg/m)	3.65	3.30		3.42
over 6 ft (1830 mm) 8 ft (2440 mm)	Outside Dim.	(Inches)	2.375	2.375		1.875 x 1.625
		(mm)	60.3	60.3		47.63 x 41.28
	Wall thickness	(Inches)	0.154	0.130		0.121
		(mm)	3.91	3.30		3.07
	Weight	(lb/ft)	3.65	3.117		2.26
		(kg/m)	5.4	4.64		3.42
over 8 ft (2440 mm)	Outside Dim.	(Inches)	2.875	2.875		2.25 x 1.70
		(mm)	73.0	73.0		57.2 x 43.2
	Wall thickness	(Inches)	0.203	0.160		0.121
		(mm)	5.16	4.06		3.07
	Weight	(lb/ft)	5.79	4.65		2.70
		(kg/m)	8.6	6.91		4.02
Rails and Braces	Outside Dim.	(Inches)	1.660	1.660		
		(mm)	42.2	42.2		
	Wall thickness	(Inches)	0.140	0.111		
		(mm)	3.56	2.82		
	Weight	(lb/ft)	2.27	1.83		
		(kg/m)	3.4	2.72		

Fence Terminology:			
	1.66" od	=	1-5/8" od
	1.9" od	=	2" od
	2.375" od	=	2-1/2" od
	2.875" od	=	3" od

Note: Fence terminology is od not id as in normal pipe specs.
Od - outside diameter / d - inside diameter

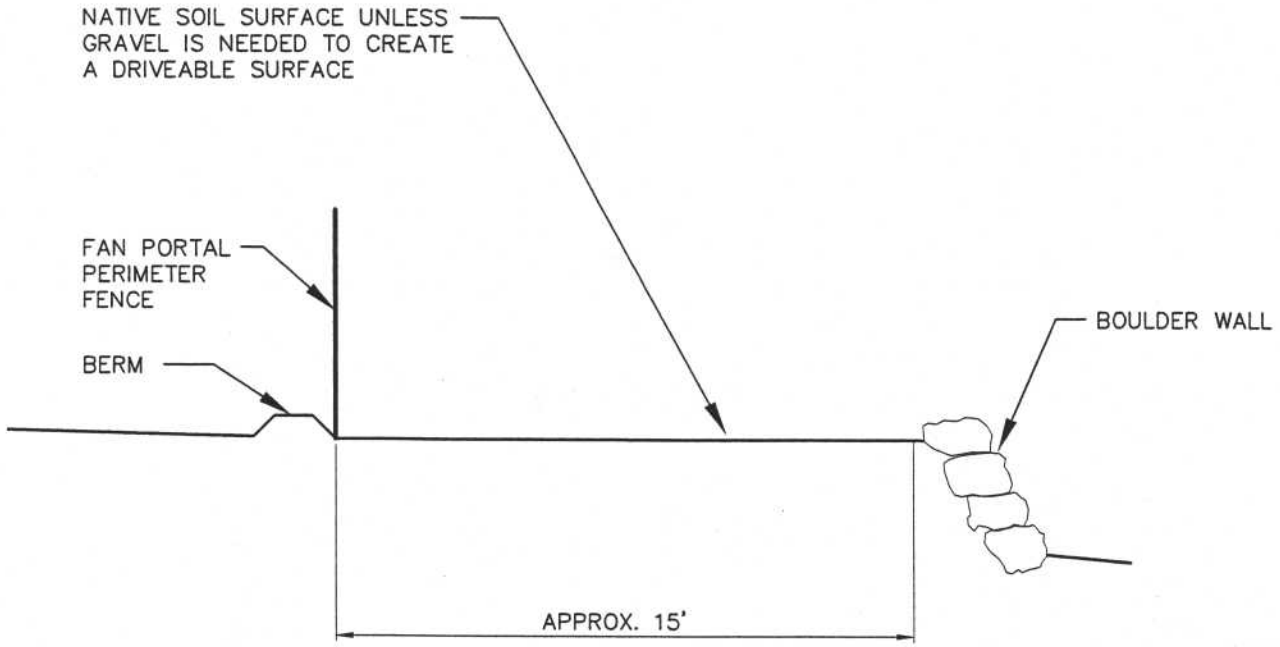

NOTES:

WATER BARS SHOULD BE INSTALLED WHERE SHOWN ON PLATE PC7-5.
THE WATER BAR DESIGN CAN BE FOUND IN APPENDIX 7-12 ATTACHMENT 1.
WATER BARS SHOULD DRAIN WATER OFF THE ROAD AT A 1 TO 3% SLOPE.

APPENDIX 5-10, FIGURE PC-1. TYPICAL CROSS-SECTION OF THE REALIGNED ROAD, PACE CANYON FAN FACILITIES

EarthFax

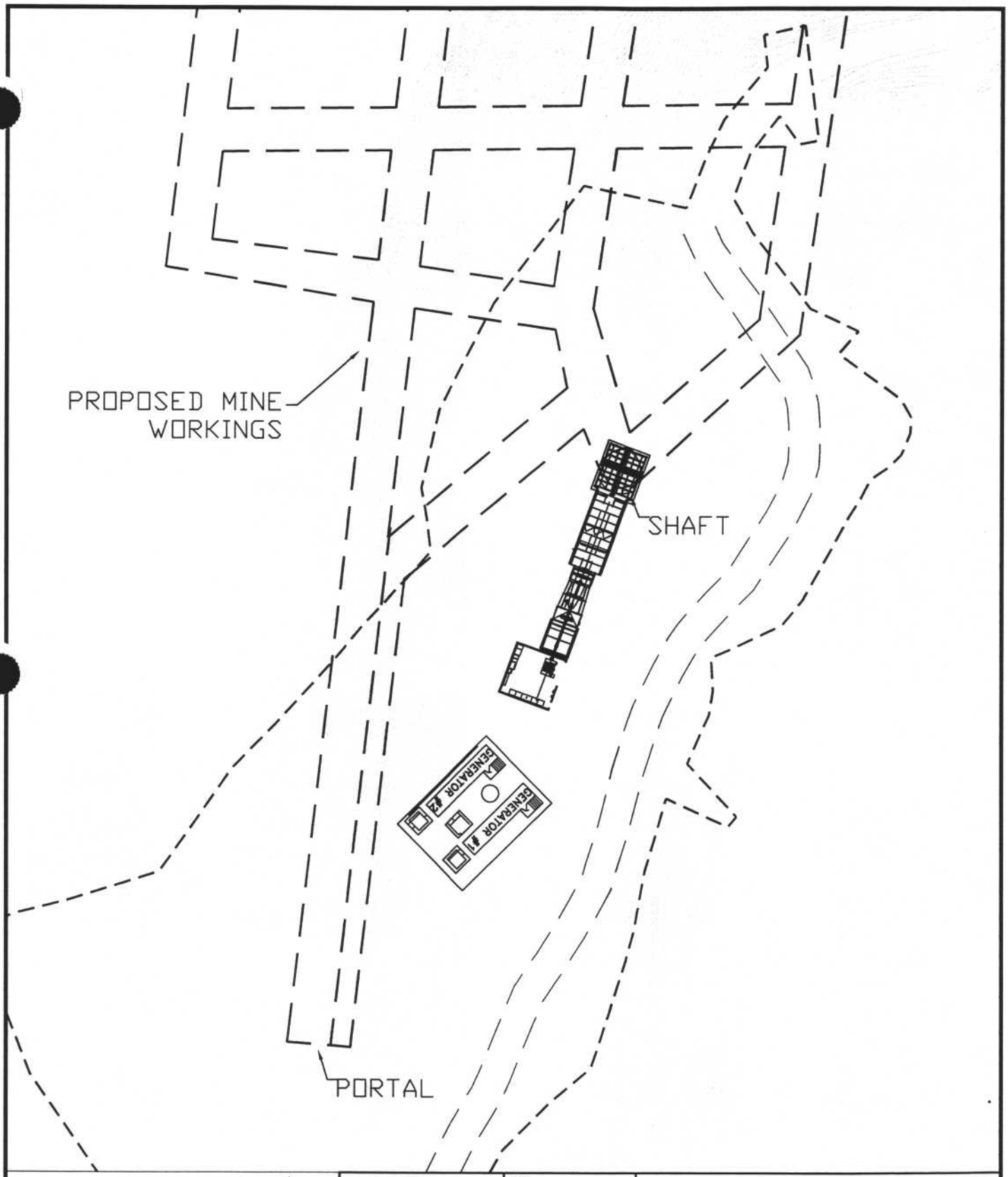

REVISIONS OR UP-DATES			DATE: 2-3-05	
NO.	DATE	BY	DESIGNED BY:	
			DRAWN BY:	CAH
			CHECKED BY:	
			SCALE: NTS	

FILENAME: Blasting Plan.dwg

Canyon Fuel Company, LLC
Dugout Canyon Mine

GILSON SEAM MINE WORKINGS

P.O BOX 1029
WELLINGTON, UTAH 84542

DRAWING OR MAP NUMBER Figure PC-2
Appendix 5-10

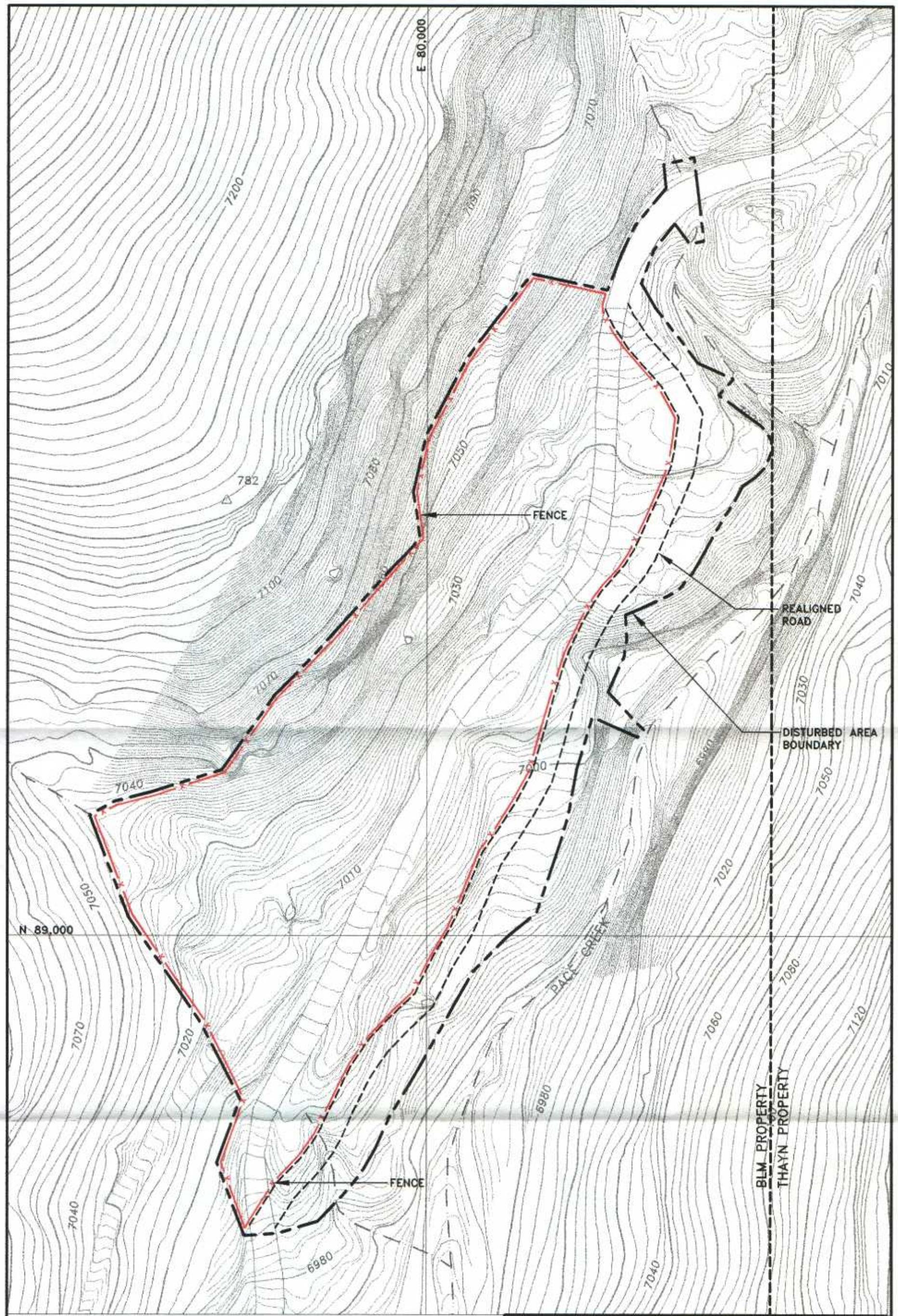

TOWNSHIP 13 SOUTH, RANGE 13 EAST, SECTION 30

TOPOGRAPHY FROM OLYMPUS AERIAL SURVEYS INC.
FLOWN 08-12-04

REVISIONS OR UP-DATES			DATE: 02-21-06	
NO.	DATE	BY	DESIGNED BY:	LDJ
			DRAWN BY:	SWT
			CHECKED BY:	VSM
			SCALE:	1"=80'

FILENAME: Q:\UG001\07\PERMIT DWG\APP5-10 FIG PC3.DWG\02-21-06

Canyon Fuel Company, LLC
Dugout Canyon Mine

PACE CANYON FAN FENCE LOCATION MAP

P.O BOX 1029
WELLINGTON, UTAH 84542

DRAWING OR MAP NUMBER
APP. 5-10 FIG. PC-3

EarthFax Engineering, Inc.

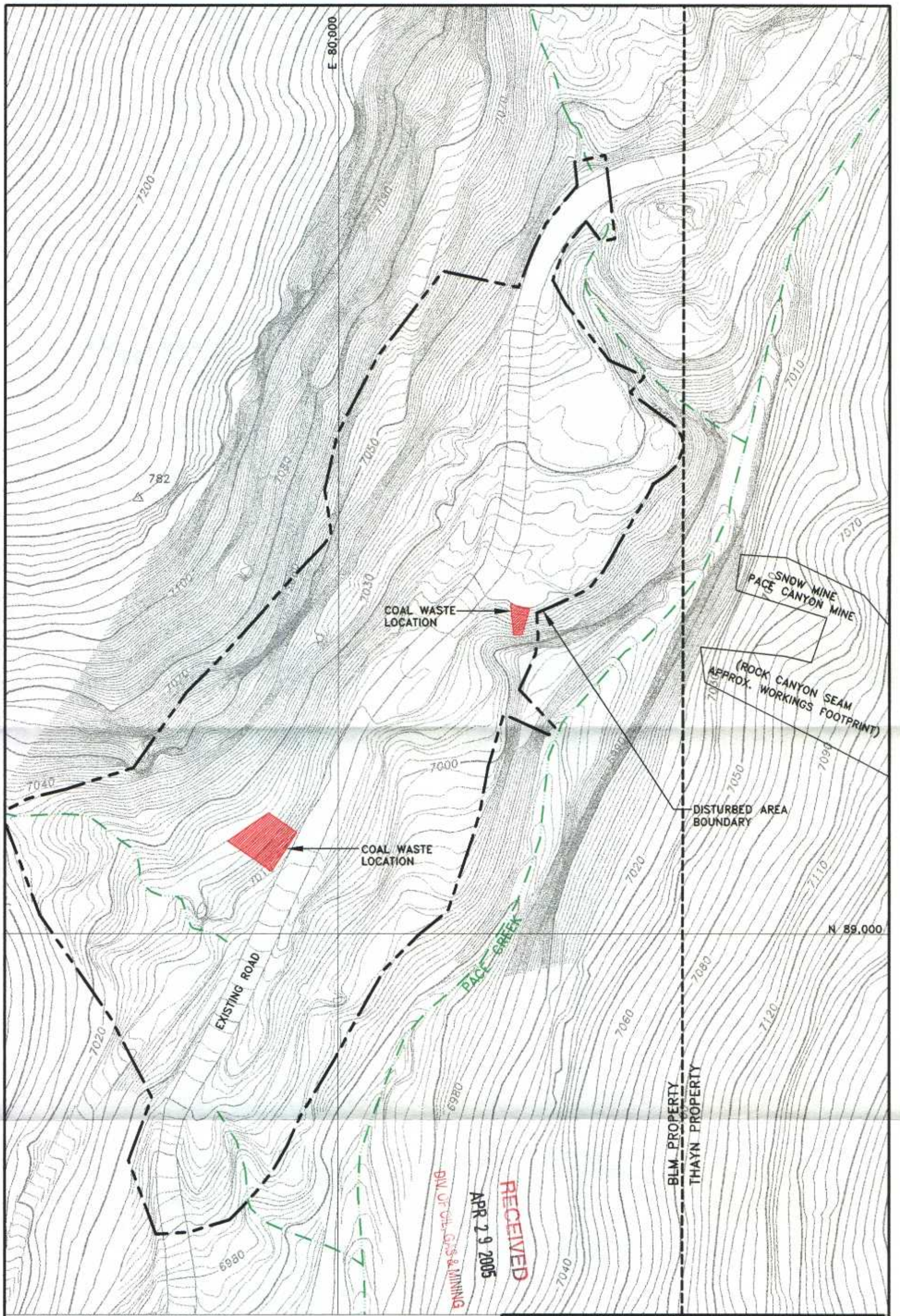

TOWNSHIP 13 SOUTH, RANGE 13 EAST, SECTION 30

TOPOGRAPHY FROM OLYMPUS AERIAL SURVEYS INC.
FLOWN 08-12-04

REGISTERED PROFESSIONAL ENGINEER No. 155977 LAYNE D. JENSEN STATE OF UTAH

REVISIONS OR UP-DATES			DATE: 11-14-04	
NO.	DATE	BY	DESIGNED BY:	LDJ
1	1-26-05	LDJ	DRAWN BY:	SWT
			CHECKED BY:	VSM
			SCALE:	1"=60'

FILENAME: S:\JOBS\07\PERMIT 2005\PLATES-AA.DWG\11-18-04

Canyon Fuel Company, LLC
Dugout Canyon Mine

PACE CANYON FAN EXISTING SURFACE TOPOGRAPHY

P.O BOX 1029
WELLINGTON, UTAH 84542

DRAWING OR MAP NUMBER
PLATE PC5-4

EarthFax Engineering, Inc.

RECEIVED
APR 29 2005
DIV. OF OIL, GAS & MINING

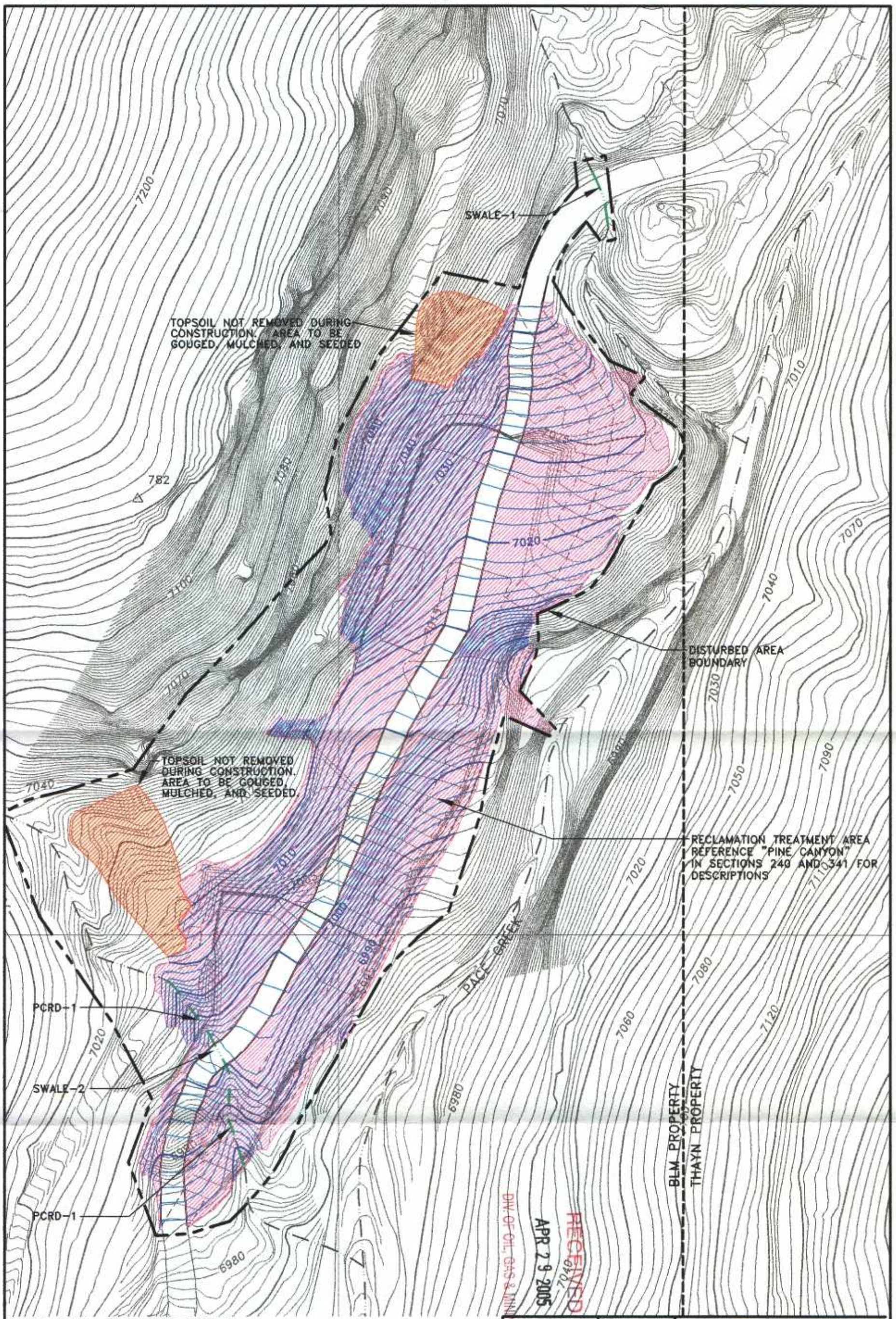

TOWNSHIP 13 SOUTH, RANGE 13 EAST, SECTION 30

TOPOGRAPHY FROM OLYMPUS AERIAL SURVEYS INC.
FLOWN 08-12-04

REGISTERED PROFESSIONAL ENGINEER
No. 180797
LAYNE D. JENSEN
STATE OF UTAH

RECEIVED
APR 29 2005
DIV. OF OIL, GAS & MINING

REVISIONS OR UP-DATES				
NO.	DATE	BY	DATE: 03-15-05	
1.	APR 05	LDJ	DESIGNED BY:	LDJ
			DRAWN BY:	SWT
			CHECKED BY:	VSM
			SCALE: 1"=60'	

FILENAME: Q:\UCGH\12\DWG\PLATE5-6.DWG\03-15-05

Canyon Fuel Company, LLC
Dugout Canyon Mine

PACE CANYON FAN RECLAMATION TREATMENT MAP

P.O. BOX 1029
WELLINGTON, UTAH 84542

DRAWING OR MAP NUMBER
PLATE PC5-6

EarthFax Engineering, Inc.

CHAPTER 7
HYDROLOGY

TABLE OF CONTENTS

Section — Page

710 INTRODUCTION 7-1

711 General Requirements 7-1

712 Certification 7-1

713 Inspection 7-1

720 ENVIRONMENTAL DESCRIPTION 7-2

721 General Requirements 7-2

722 Cross Sections and Maps 7-2

722.100 Location and Extent of Subsurface Water 7-2
722.200 Location of Surface Water Bodies 7-2
722.300 Locations of Monitoring Stations 7-2
722.400 Location and Depth of Water Wells 7-4
722.500 Surface Topography 7-4

723 Sampling and Analysis 7-4

724 Baseline Information 7-4

724.100 Groundwater Information 7-4

Colton Formation 7-11
Flagstaff Formation 7-12
North Horn Formation 7-15
Price River Formation 7-21
Castlegate Sandstone 7-22
Blackhawk Formation 7-23
Star Point Sandstone 7-29
Mancos Shale 7-29

724.200 Surface Water Information 7-31
724.300 Geologic Information 7-39
724.400 Climatological Information 7-39
724.500 Supplemental Information 7-39
724.600 Survey of Renewable Resource Lands 7-39
724.700 Alluvial Valley Floor Requirements 7-39

TABLE OF CONTENTS (Continued)

Section — Page

725 Baseline Cumulative Impact Area Information 7-40

726 Modeling 7-40

727 Alternative Water Source Information 7-40

728 Probable Hydrologic Consequences 7-40

728.100 Potential Impacts to Surface and Groundwater 7-40
728.200 Baseline Hydrologic and Geologic Information 7-41
728.300 PHC Determination 7-41

Potential Impacts to the Hydrologic Balance 7-41
Acid- or Toxic-Forming Materials 7-41
Sediment Yield 7-41
Acidity, Total Suspended Solids, and Total Dissolved Solids 7-42
Flooding or Streamflow Alteration 7-43
Groundwater and Surface Water Availability 7-45
Potential Hydrocarbon Contamination 7-50
Road Salting 7-50
Coal Haulage 7-50
Water Replacement 7-50

729 Cumulative Hydrologic Impact Assessment (CHIA) 7-51

730 OPERATION PLAN 7-51

731 General Requirements 7-51

731.100 Hydrologic-Balance Protection 7-51

Groundwater Protection 7-51
Surface Water Protection 7-51

731.200 Water Monitoring 7-51

Groundwater Monitoring 7-53
Surface Water Monitoring 7-57

731.300 Acid- and Toxic-Forming Materials 7-62
731.400 Transfer of Wells 7-62
731.500 Discharges 7-62

TABLE OF CONTENTS (Continued)

Section — Page

Discharges Into an Underground Mine 7-63
Gravity Discharges from an Underground Mine 7-63

731.600 Stream Buffer Zones 7-63

Stream Channel Diversions 7-63
Buffer Zone Designation 7-64

731.700 Cross Sections and Maps 7-64
731.800 Water Rights and Replacement 7-64

732 Sediment Control Measures 7-64

732.100 Siltation Structures 7-64
732.200 Sedimentation Ponds 7-65

Compliance Requirements 7-65
MSHA Requirements 7-65

732.300 Diversions 7-65
732.400 Road Drainage 7-68

733 Impoundments 7-69

733.100 General Plans 7-69

Certification 7-69
Maps and Cross Sections 7-69
Narrative 7-69
Subsidence Survey Results 7-69
Hydrologic Impact 7-69
Design Plans and Construction Schedule 7-69

733.200 Permanent and Temporary Impoundments 7-70

Requirements 7-70
Permanent Impoundments 7-70
Temporary Impoundments 7-70
Hazard Notifications 7-70

734 Discharge Structures 7-70

735 Disposal of Excess Spoil 7-70

TABLE OF CONTENTS (Continued)

Section — Page

736 Coal Mine Waste 7-70

737 Noncoal Mine Waste 7-71

738 Temporary Casing and Sealing of Wells 7-71

740 DESIGN CRITERIA AND PLANS 7-71

741 General Requirements 7-71

742 Sediment Control Measures 7-71

742.100 General Requirements 7-71

Design 7-71
Measures and Methods 7-71

742.200 Siltation Structures 7-72

General Requirements 7-72
Sedimentation Ponds 7-74
Other Treatment Facilities 7-80
Exemptions 7-80

742.300 Diversions 7-80

General Requirements 7-80
Diversion of Perennial and Intermittent Streams 7-81
Diversion of Miscellaneous Flows 7-82

742.400 Road Drainage 7-83

All Roads 7-83
Primary Roads 7-85

743 Impoundments 7-87

744 Discharge Structures 7-87

744.100 Erosion Protection 7-87
744.200 Design Standards 7-87

745 Disposal of Excess Spoil 7-87

TABLE OF CONTENTS (Continued)

Section | Page

746 Coal Mine Waste 7-88

746.100 General Requirements 7-88
746.200 Refuse Piles 7-88
746.300 Impounding Structures 7-88
746.400 Return of Coal Processing Waste to Abandoned Underground Workings 7-88

747 Disposal of Noncoal Mine Waste 7-88

748 Casing and Sealing of Wells 7-88

750 PERFORMANCE STANDARDS 7-89

751 Water Quality Standards and Effluent Limitations 7-89

752 Sediment Control Measures 7-89

752.100 Siltation Structures and Diversions 7-90
752.200 Road Drainage 7-90

753 Impoundments and Discharge Structures 7-90

754 Disposal of Excess Spoil, Coal Mine Waste and Noncoal Mine Waste 7-90

755 Casing and Sealing of Wells 7-90

760 RECLAMATION 7-91

761 General Requirements 7-91

762 Roads 7-91

762.100 Restoring the Natural Drainage Patterns 7-91

Buffer Zone Designation 7-98

762.200 Reshaping Cut and Fill Slopes 7-98

763 Siltation Structures 7-98

763.100 Maintenance of Siltation Structures 7-98
763.200 Removal of Siltation Structures 7-100

TABLE OF CONTENTS (Continued)

Section — Page

764 Structure Removal 7-100

765 Permanent Casing and Sealing of Wells 7-100

REFERENCES 7-101

LIST OF TABLES

Table

7-1 Observation Well Completion Summary 7-5

7-2 Hydrologic Monitoring Summary 7-7

7-3 Hydrograph Characteristics of Selected Springs Issuing from the Flagstaff Formation 7-14

7-4 Groundwater Monitoring Program 7-55

7-5 Surface Water Monitoring Program 7-60

7-6 Summary of Watershed Data 7-76

7-7 Stage-Capacity Curve for the Sedimentation Pond 7-78

7-8 Summary of Diversion Ditches 7-84

7-9 Summary of Diversion Culverts 7-86

7-10 Dugout Creek Channel Stability Evaluation 7-99

LIST OF FIGURES

Figure — Page

7-1 General Hydrostratigraphic Cross Section 7-3

7-2 Trilinear Plot of a Sample Collected From the Colton Formation 7-13

7-3 Trilinear Plot of Samples Collected From the Flagstaff Formation 7-16

LIST OF FIGURES (Continued)

Figure | Page

7-4 Hydrographs of SP-8 and SP-10 7-18

7-5 Trilinear Plot of Samples Collected From the North Horn Formation 7-19

7-6 Trilinear Plot of Samples Collected From the Blackhawk Formation 7-25

7-7 Hydrographs of Monitoring Wells Completed in the Blackhawk Formation 7-26

7-8 Hydrographs of Soldier Creek 7-33

7-9 Hydrographs of Dugout Creek 7-34

7-10 Hydrographs of Soldier Creek and Dugout Creek Showing Base Flow Separation 7-36

7-11 Predicted Mine-Water Inflow as a Function of Mine Length 7-48

7-12 Channel Stability Enhancement Structures 7-97

LIST OF PLATES

Plate

7-1 Hydrologic Monitoring Stations

7-2 Water Rights

7-3 Castlegate Potentiometric Surface

7-4 Sedimentation Pond Design

7-5 Disturbed Area Diversions

7-6 Dugout Creek Watershed Upstream from Surface Facilities

7-7 Undisturbed Watersheds Adjacent to Surface Facilities

7-8 Disturbed Area Watershed Boundaries

7-9 Dugout Creek Reclamation Details

LIST OF PLATES (Continued)

Plate

The following plates are located in Appendix 7-12

PC 7-4 Pace Canyon Fan Sediment Trap Detail and Cross-Sections
PC 7-5 Pace Canyon Fan Disturbed Area Diversions
PC 7-5A Pace Canyon Fan Sediment Control Map
PC 7-6 Pace Canyon Fan Undisturbed Watershed Boundaries
PC 7-7 Pace Canyon Fan Reclamation Watershed Boundaries

LIST OF APPENDICES

Appendix

7-1 Water Rights Data

7-2 Groundwater Monitoring Data

7-3 Mayo and Associates Report

7-4 Monitoring Well Water-Level Data and Well Logs

7-5 USGS Streamflow and Water-Quality Data for Dugout Creek

7-6 UPDES Permit Applications

7-7 Surface-Water Monitoring Data

7-8 Sedimentation Pond Design Calculations

7-9 Diversion and Culvert Design Calculations

7-10 Hydrologic Design Methods

7-11 Reclamation Hydrology Calculations

7-12 Pace Canyon Fan Portal Site

CHAPTER 7
HYDROLOGY

710 INTRODUCTION

711 General Requirements

This chapter presents a description of:

- Existing hydrologic resources within the permit and adjacent areas;
- Proposed operations and the potential impacts to the hydrologic balance;
- Methods of compliance with design criteria and the calculations utilized to show compliance;
- Applicable hydrologic performance standards; and
- Hydrologic reclamation plans for the Dugout Canyon Mine.

Additional information can be found in the following amendments: Methane Degassification Amendment (August 2003), Refuse Pile Amendment (February 2003), and the Leachfield Addendum A-1 (March 2001). The remainder of the State Lease ML-48435-OBA (SITLA Lease) was incorporated into the Dugout Canyon Mine permit area in 2005.

712 Certification

All maps, plans, and cross sections presented in this chapter have been certified by a qualified, registered professional engineer.

713 Inspection

Impoundments associated with the mining and reclamation operations will be inspected as described in Section 514.300 of this M&RP.

TABLE 7-1

OBSERVATION WELL COMPLETION SUMMARY[a]

Well Number	Total Drilled Depth (ft)	Elev. Top of Casing (ft)	Casing ID (in)	Length of Perf. (ft)	Formation Monitored
GW-5-1	1,826	7,186.4	5	22	Blackhawk
GW-6-1	2,180	7,724.7	5	200	Blackhawk
GW-10-2	2,084	7,727.4	5	250	Castlegate
GW-11-2	2,399	8,203.8	5	175	Price River
GW-19-1	2,050	8,258.2	4	364	North Horn, Price River, Castlegate, Blackhawk
GW-24-1*	1,706	8,422.0	4	100	Castlegate
GW-32-1	2,360	7,152.1	2.5	50	Blackhawk
G-58.5	3,177	7,398	8.5	5	Blackhawk

(a) See Plate 7-1 for well locations.

* Monitoring discontinued 4th Quarter 2004 due to blockage.

M&RP. All groundwater use (seeps and springs) within the permit and adjacent areas is confined to wildlife and stock watering.

Table 7-2 provides a summary of the period of record and selected additional information regarding groundwater sources that have been monitored within the permit area and the nearby vicinity. These sources include wells, springs, and mine-water inflows from the Soldier Canyon Mine. The geologic source for the springs presented in Table 7-2 was determined by comparing Plates 6-1 and 7-1. These data have been collected from over 100 locations within the permit and adjacent areas beginning as early as 1976 and extending through the present, as indicated in the data base contained in Appendix 7-2.

The data provided in Appendix 7-2 were obtained from multiple sources, including (but not limited to) the Soldier Creek Coal Company M&RP and annual reports, U.S. Geological Survey publications, the Sage Point-Dugout Canyon permit application filed by Eureka Energy Company in 1980, Appendix 7-3 of this M&RP, and various consultant reports. Since not all monitoring parties were responsible to adhere to UDOGM or SMCRA rules, the laboratory parameters varied between reports. However, the data are still considered valid and appropriate for determining baseline conditions within the permit and adjacent areas. It should be noted that much of the manganese data presented in Appendix 7-3 represent total (as opposed to dissolved) concentrations. Additional baseline and operational data for sampling sites within the SITLA tract addition to the Dugout Mine permit is also available on the Division's Electronic Water Monitoring Database.

A hydrologic evaluation of the area was published by Mayo and Associates (1996). This evaluation, which is presented in Appendix 7-3 of this M&RP was used together with published reports of the area and the extensive data base contained in Appendix 7-2, to prepare this description of baseline hydrologic conditions within the permit and adjacent areas. While the Mayo report does not specifically include the SITLA tract area, the geologic and hydrogeologic conditions within the tract are similar enough to the area studied by Mayo to assume the conclusions reached by Mayo would apply to the SITLA tract.

Groundwater Systems

Geologic conditions in the permit and adjacent areas are described in detail in Chapter 6 of this M&RP. Formal aquifer names have not been applied to any groundwater system in the permit and adjacent areas because the geometry, continuity, boundary conditions, and flow paths of the groundwater systems in the area are not fully understood. However, the data do suggest

groundwaters in the Flagstaff and North Horn Formations, and 2) the exposed recharge area of the Price River Formation is limited primarily to areas of steep cliff faces.

Wahler Associates (1982) indicate that monitoring well GW-11-2 (Plate 7-1) is completed within the Price River Formation. Data collected from this well (Appendix 7-4) indicate that water levels varied by approximately 8 feet during the period of December 1979 through November 1982, but showed no consistent trend. A measurement collected in September 1995 indicated that the water level was 1.2 feet lower than the last time it was measured nearly 13 years earlier. Hence, although a slight decline in water levels has occurred during the period of record, this decline is not considered significant.

Castlegate Sandstone. The Castlegate Sandstone consists of a fine- to medium-grained sandstone that is cemented with clay and calcium carbonate. The outcrops of this sandstone form prominent cliffs in the area.

Data presented in Table 7-2 and Appendix 7-2 indicate that only two springs (SC-80 and SC-81) have been found issuing from the Castlegate Sandstone within the permit and adjacent areas. Therefore, this formation is not considered to be a significant aquifer. The flow of these springs was 1 gpm or less in September 1995, with no measurable flow being observed in October 1995. Based on specific conductance measurements collected from these springs, the TDS concentration of water issuing from the Castlegate Sandstone varies from about 360 to 430 mg/l. The water is slightly alkaline, with a pH of 7.7 to 8.0.

Wahler Associates (1982) indicate that monitoring wells GW-10-2 and GW-24-1 (Plate 7-1) are completed in the Castlegate Sandstone. With the exception of early measurements which were likely influenced by the presence of drilling fluids prior to perforation of the casing (Waddell et al., 1986), data collected from GW-24-1 indicate that water levels varied by 4.5 feet during the period of March 1980 through November 1982 (Appendix 7-4), but no consistent trend was noted. The cap could not be removed from this well for a water-level measurement in September 1995. During the Winter of 1999-2000, Monitoring Well 24-1 became blocked. The water level in the well has been inaccessible since that time and was permanently removed from monitoring after the 4th Quarter of 2004.

Data collected from GW-10-2 indicate that water levels have declined approximately 20 feet during the 15-year period of record following an initial stabilization of drilling fluids after casing perforation (January 1980 through September 1995). The rate of this decline has been gradual.

The potentiometric surface of groundwater flow in the Castlegate Sandstone is to the north-northwest at an average gradient of 0.024 ft/ft based on measurements reported by Wahler Associates (1982) for November 1982. The datum reported for GW-11-2, under the assumption that the Price River Formation is in hydraulic connection with the Castlegate Sandstone was also used to determine the potentiomentric gradient.

Groundwater recharge to the Castlegate Sandstone is from precipitation and snowmelt. However, as evidenced by the fact that the surface exposure of the Castlegate within the permit and adjacent areas is generally limited to steep cliffs within minimal horizontal surface area, total recharge is probably low. Recharge to the Castlegate Sandstone is further limited by the lack of significant developed soil resources over the formation to encourage infiltration and the presence of low-permeability shales in the overlying Price River Formation (see Waddell et al., 1981).

Discharge from the Castlegate Sandstone probably occurs mainly as springs along the outcrop and as through-flow to the underlying Blackhawk Formation. As indicated above, spring flow from the unit is limited in flow and in occurrence. Besides the monitoring wells completed in the Castlegate Sandstone, no known wells are completed in the formation.

Blackhawk Formation. The Blackhawk Formation underlies the Castlegate Sandstone and consists of interbedded sandstone, siltstone, shale, and coal. The Rock Canyon coal seam, to be mined by SCM, is located in the lower portion of the Blackhawk Formation.

Only three springs have been identified as issuing from the Blackhawk Formation (SC-61, SC-62, and G-100 - see Table 7-2). Springs SC-61 and SC-62 issue near a stream channel in a tributary of Dugout Canyon. Limited data collected from these springs (Appendix 7-2) indicate

rise in water level elevation between June 3, 1993 and August 24, 1993 which corresponded to mine development in the vicinity of the well. This rise in water level can be explained by the redistribution of vertical stress acting on the nearby coal (see Appendix 7-3). Following completion of the 1993 development, a sustained moist area was identified on the floor of the Soldier Canyon Mine No. 5 entry, adjacent to GW-5-1. Furthermore, subsequent monitoring of the water level in the well indicated that, between August 24, 1993 and November 1, 1995, the average rate of water level decline increased to approximately 0.09 ft/day (an increase of about 4.5 times the previously observed rate). This decline was likely due to dewatering of the Blackhawk Formation in the immediate vicinity of the monitoring well.

Wahler Associates (1982) calculated a transmissivity of 0.009 gpd/ft (1.2×10^{-3} ft^2/day) from the falling-head slug test which they performed in GW-5-1. Sergent, Hauskins & Beckwith (1986) reported transmissivities of 2.3×10^{-3} to 6.7×10^{-4} cm^2/s (2.1×10^{-1} to 6.2×10^{-2} ft^2/day) for slug tests conducted in holes drilled into the Blackhawk Formation from within the Soldier Canyon Mine. Based on monitored thicknesses of 22 feet in GW-5-1 (Table 7-1) and 120.8 feet in each of the in-mine holes (Sergent, Hauskins & Beckwith, 1986), the hydraulic conductivity of the Blackhawk Formation is calculated to vary from 5.5×10^{-5} to 1.7×10^{-3} ft/day, with a median of 5.1×10^{-4} ft/day.

Well GW-6-1 is perforated over a 200-foot long interval which includes the Sunnyside seam (see Table 7-1). Initial water level measurements collected from this well are believed to be associated with residual water remaining from drilling and casing operations and are, therefore, probably not representative of natural conditions. Water levels declined between November 1989 and August 1991 (Figure 7-7). From August 1991 through August 1993, water levels in GW-6-1 remained relatively stable at a depth of approximately 425 feet. Monitoring on June 3, 1994 found the well to be dry and plugged at a depth of approximately 470 feet. All subsequent attempts to monitor this well have found the plugged/dry condition unchanged.

Monitoring well GW-32-1 is perforated in the Blackhawk Formation immediately above the Sunnyside seam (see Table 7-1) in a location which is down dip of Soldier Canyon Mine workings. Water level monitoring information shows a fairly consistent rise in water elevation.

From November 1994 through August 1995, the water level appears to have stabilized at a depth of approximately 291 feet (Figure 7-7). There is no information at this time that would suggest that underground mining activities in the nearby Soldier Canyon Mine are effecting the water levels observed to date.

Monitoring well G-58.5 was completed by Mountain Fuel Supply Company into the Blackhawk Formation in 1979. Waddell et al. (1986) reported a depth-to-water in March 1980 in this well of 502.8 feet. Waddell et al. (1982) reported depths to water of 501.7 to 502.4 feet in April and September 1880. No additional water-level data are available for this well.

Attempts for this M&RP to construct a potentiometric surface for the Blackhawk Formation in the Soldier Canyon area based on data collected from GW-5-1, GW-6-1, and GW-32-1 proved fruitless. The difficulty in preparing this potentiometric surface may have been due to the influence of outcropping in the adjacent Soldier Canyon, the influence of mining in the nearby Soldier Canyon Mine, and/or varying lengths and stratigraphic locations of the perforated sections of the monitoring wells within the discontinuous strata which comprise most of the Blackhawk Formation. However, based on water-level data collected from one of the existing Dugout Canyon portals and from monitoring wells GW-5-1 and G-58.5, Waddell et al. (1986) concluded that the flow of groundwater in the Blackhawk Formation within the permit and adjacent areas is to the north away from the face of the cliffs (i.e., down dip as generally seen in the Castlegate Sandstone). They estimated the hydraulic gradient in the Blackhawk Formation to be 42 feet per mile (0.008 ft/ft). Waddell et al. (1986) indicate that the coal bearing zone to be mined in the Dugout Canyon operations will probably be saturated in most areas and will require dewatering during mining. However, since mining was initiated at the Dugout Mine, saturated coal zones have not been encountered. The majority of the water encountered during mining both the Rock Canyon and Gilson seams has entered the mine through the roof and discharges from isolated sandstone channels within the Blackhawk Formation.

Recharge to the Blackhawk Formation is of limited magnitude, due primarily to the limited area of exposure on steep outcrops and the presence of low-permeability units in overlying formations. Data presented in Appendix 7-3 indicate that Blackhawk Formation groundwater which discharges into the Soldier Canyon Mine is of ancient meteoric origin (greater than 20,000 years), thereby supporting the conclusion that the rate of recharge to the formation is minimal. Mayo and Associates (1996) concluded that the old groundwater age and the isotopic compositions of water encountered in the Soldier Canyon Mine are evidence that the groundwaters are not part of actively flowing, shallow groundwater systems. The groundwater ages also demonstrate that the hydraulic connection between these old groundwaters and the overlying active (and younger) groundwater systems in the Flagstaff and North Horn Formations is very limited or does not exist.

The quality of groundwater in the Blackhawk Formation has been evaluated by Mayo and Associates (1996) based on data collected from leakage into the Soldier Canyon Mine (see Appendix 7-3). These data indicate that Blackhawk Formation groundwater has a mean TDS concentration of about 750 mg/l and is of the sodium-bicarbonate type (Figure 7-6). These waters are chemically distinct from groundwater in overlying groundwater systems. The solute compositions of mine groundwaters suggest a complex series of rock-water and gas-water reactions (Mayo and Associates, 1996).

The dissolved iron concentration of groundwater flowing into the Soldier Canyon Mine has historically been less than 0.5 mg/l and is generally less than 0.1 mg/l (see Appendix 7-2). The total iron concentration of this water has historically been less than 2.0 mg/l and generally less than 0.5 mg/l. The total manganese concentration of Blackhawk Formation water (as measured in the

Soldier Canyon Mine) has historically been less than 0.5 mg/l and is typically less than 0.1 mg/l (see Appendix 7-2).

Four exploration holes (DUG0104, 0204, 0101, and 0201) were drilled within or immediately adjacent to the SITLA Lease area and completed in the Blackhawk formation. All holes were completed below the Gilson Coal Seam. No water was encountered in any of the exploration holes per personal communication with Mike Stevenson, Project Geologist, Ark Land Company, November 22, 2004.

Exploration Hole Number	Location (approximate)	Year Drilled
DUG0104	T13S, R13E, Section 20, NW1/4SE1/4	2004
DUG0204	T13S, R13E, Section 19, SE1/4NE1/4	2004
DUG0101	T13S, R13E, Section 30, NE1/4NW1/4	2001
DUG0201	T13S, R13E, Section 19, SE1/4SE1/4	2001

Star Point Sandstone. In those locations where the Star Point Sandstone exists within the permit and adjacent areas, it consists of a fine-grained calcareous sandstone with layers of siltstone and mudstone. In keeping with regional practice (see Lines, 1985), the Star Point Sandstone and Blackhawk Formation are considered to be hydraulically connected. However, only one spring (SC-64) has been discovered issuing from the Star Point Sandstone within the permit and adjacent areas. The near absence of springs in this formation suggests that the Star Point does not receive appreciable annual recharge and that it does not support active groundwater systems in the area.

Recharge to the Star Point Sandstone probably occurs via leakage from the overlying Blackhawk Formation. Hence, this water is likely of ancient origin.

Data collected from SC-64 indicated that the discharge of this spring declined from 2 gpm to 0.5 gpm in the period of September 1995 to October 1995 (see Appendix 7-2). The TDS of this water, as estimated from the specific conductance data, is approximately 700 mg/l, with a pH of about 7.5.

Mancos Shale. The Mancos Shale is exposed south of the permit area. This formation is a relatively impermeable marine shale and is not considered to be a regional or local aquifer. Groundwater samples collected from four monitoring wells located approximately 2 miles south of Soldier Canyon Mine have a mean TDS concentration of approximately 10,000 mg/l and is of the sodium-sulfate-chloride type (Appendix 7-3). Chemical compositions are consistent with the dissolution of halite and gypsum as well as cation exchange.

Recharge and Discharge Relations

Recharge within the permit area occurs primarily on the exposed upland outcrops of the Flagstaff Formation and the North Horn Formation. Waddell et al. (1986) estimated that the annual recharge to the Flagstaff Formation is 9 percent of the total annual precipitation. Recharge is probably greatest where surface fractures intersect the topographic highs where the Flagstaff and North Horn Formations outcrop. Recharge to the Blackhawk Formation and the Star Point Sandstone probably occurs primarily from vertical movement of water through the overlying formations. The rate of recharge to the Blackhawk Formation and the Star Point Sandstone is very slow, as evidenced by the ancient age of groundwater within those formations (see Appendix 7-3).

Assuming mass-balance and stable hydrologic conditions, recharge will equal discharge over the long term. The relatively young age of groundwater discharging from the Flagstaff and North Horn Formations as compared with the underlying Blackhawk Formation suggests that the stratigraphically-higher water discharges rapidly and is not hydraulically connected with the Blackhawk Formation. Waddell et al. (1986) conclude that the perched nature of the Flagstaff Formation protects it from the influence of dewatering of the coal-bearing zone unless the upper zone is influenced by subsidence.

Waddell et al. (1986) performed seepage studies in Pine Canyon (located immediately north of the permit area) and found that significant increases in the flow of Pine Canyon occur near the contact of the North Horn Formation and the overlying Flagstaff Formation. They concluded that downward percolation from the Flagstaff Formation is impeded by the claystones and mudstones of the North Horn Formation, forcing the water to move laterally and emerge along the outcrop in the canyon bottom.

Mining Impacts to Subsurface Water Resources

As presented previously, exploration drilling in the SITLA tract has not encountered significant volume of water in the Gilson seam or overlying strata. As discussed in previous paragraphs, the formations that overlie the coal seams do not include extensive units of rock that would form large aquifers. The Blackhawk Formation can discharges water from isolated channel sandstones in the roof of the mine. However, very few springs have been found on the surface in the Dugout Canyon Mine area that discharge from Blackhawk units. Springs that do discharge from the Blackhawk Formation typically have very low flows. In-mine flows that are encountered as a result of mining typically discharge from the roof, are initially much less than 100 gpm, and have flow rates that decrease rapidly as mining progresses. The sandstone channels that hold water in the Blackhawk are typically lenticular, have low to moderately low transmissivity rates, of limited areal extent, and contain waters older than 50 years and typically older than a few thousand years. Since the Blackhawk Formation in the Dugout Canyon Mine area, including the SITLA Tract, is very similar

throughout, it is unlikely that mining will encounter large volumes of water as coal is removed from the Gilson seam in the permit area as a whole.

The Price River and Castlegate Sandstone formations are also poor aquifers in the mine area as described in the previous sections. Only two springs have been found within the Dugout Mine area, including the SITLA tract, issuing from these formations. These formations do not conduct water readily, do not contain extensive aquifers, and do not appear to be saturated. Subsidence of these formations will not cause significant changes to subsurface water resources since these resources are apparently not present.

Water bearing strata within the North Horn and Flagstaff Formations (the contact between the two formations is indistinguishable in most of the SITLA tract) should not be significantly affected. Subsiding these formations may result in locally increased hydraulic conductivity within the strata but water loss to the underlying formations will be minimal, if at all. The fine grained units (siltstones and shales) that perch the aquifers within the North Horn/Flagstaff Formations should easily seal subsidence induced fractures and limit downward migration of water from the isolated aquifers. Additionally, the Price River Formation consists of interbedded mudstone, siltstone, and fine-grained sandstones. The finer-grained siltstone and mudstones would seal fractures within the formation and inhibit downward movement or loss of water from the North Horn/Flagstaff aquifers.

724.200 Surface Water Information

Water Quantity

The permit area exists within portions of the Dugout Creek, Soldier Creek, Pace Creek, and Rock Creek watersheds. Major tributaries of Soldier Creek whose watersheds extend into the permit area include Fish Creek and Pine Canyon. Based on observations and flow data obtained during the collection of water-quality samples within the permit and adjacent areas, portions of Dugout, Fish Creek, and Pace Creek are considered perennial within the permit area. Pine Canyon appears to be perennial in its upper reaches near the northern border of the permit area. Rock Creek appears to be perennial in its upper reaches above the Castlegate Sandstone and only intermittent below the formation. Several smaller tributaries of these streams within the permit and adjacent areas, are ephemeral.

Waddell et al. (1981) estimated that the average flow of Dugout Creek is approximately 7 cubic feet per second (5,100 acre-feet per year) and that up to 70 percent of the streamflow occurs during the period of May through July each year. The seasonal record of a stream gaging station which was installed on Dugout Creek during the period of October 1, 1979 through October 2, 1981 suggest that this estimate of the seasonal variation is correct (see Appendix 7-5). The location of this stream gaging station (DC-1) is noted on Plate 7-1.

During the 1980 water year, Waddell et al. (1986) estimated that the total flow of Dugout Creek at station DC-1 (referred by them as station S60) was 1,900 acre-feet. They further estimated that 53 percent of this flow (1,000 acre-feet) was contributed by springs issuing from the Flagstaff Formation, 10 percent (200 acre-feet) was contributed by springs issuing from the Blackhawk and other formations, and 37 percent (700 acre-feet) was contributed as surface runoff.

The average flow of Soldier Creek has been estimated by Waddell et al. (1981) to be approximately 8 cubic feet per second (5,800 acre-feet per year). This flow is expected to vary seasonally in a manner similar to that reported for Dugout Creek (i.e., the majority of the flow occurring during the late spring and early summer months in response to snowmelt runoff).

During the 1980 water year, Waddell et al. (1986) estimated that the total flow of Soldier Creek at station G-5 was 4,200 acre-feet. The source of this runoff was estimated to be as follows:

- 43 percent (1,800 acre-feet) from springs issuing from the Flagstaff Formation;
- 24 percent (1,000 acre-feet) from springs issuing from the Blackhawk and other formations; and
- 33 percent (1,400 acre-feet) as surface runoff.

Hence, the relative contribution of the Flagstaff Formation to streamflow in Soldier Creek is lower than that in Dugout Creek, while the contribution of the Blackhawk and other formations to Dugout Creek is lower than that to Soldier Creek.

Seasonal fluctuations in the discharge of streams in the area are readily apparent in the hydrographs of Solider Creek (Figure 7-8) and Dugout Creek (Figure 7-9). Locations of these stations are noted on Plate 7-1. As indicated, the discharge of local streams is greatest in the late spring and early summer months when influenced predominantly by snowmelt runoff.

Waddell et al. (1986) performed seepage measurements along Pine Canyon and Soldier Creek in the autumns of 1979 and 1980, in an effort to evaluate the effects of bedrock formations on the baseflow of the creeks. The seepage measurements demonstrated significant inflow to Pine Canyon occurs from the Flagstaff Formation near the contact with the underlying North Horn Formation. In Soldier Creek, the investigation found that 1) base flow more than tripled as Soldier Creek crossed the North Horn Formation, 2) base flow decreased about 20 to 30 percent as the creek crossed the Price River Formation and Castlegate Sandstone, and 3) base flow increased 10 to 25 percent as the creek crossed the Blackhawk Formation.

Figure 7-10 presents semilog plots of streamflow in Soldier Creek (station G-5) and Dugout Creek (station DC-1) for the latter portion of 1980, as reported by Waddell et al. (1986). Included in this figure are plots of discharge rates for springs issuing from the Flagstaff Formation and from the underlying Blackhawk Formation, Castlegate Sandstone, and Price River and North Horn Formations (Waddell et al., 1986). At Soldier Creek, the curves are approximately parallel for streamflow and the composite flows issuing from the Flagstaff Formation through August.

Thereafter, the recession curve for the streamflow flattens, while that for the Flagstaff Formation continues to decrease. Based on this condition, Waddell et al. (1986) concluded that the discharge of Soldier Creek is controlled predominantly by seepage from the Flagstaff Formation during the spring and early summer and by seepage from the underlying formations (Blackhawk, Castlegate, Price River, and North Horn) during the late summer and fall.

The data presented in Figure 7-10 indicate that discharge from the Flagstaff Formation dominates the flow of Dugout Creek throughout the year. Seepage from the underlying formations may slightly influence the flow of Dugout Creek during the autumn months, but this influence appears to be minimal. The lack of seepage from the Blackhawk and immediately-overlying formations to Dugout Creek supports the conclusion presented in Section 724.100 that the flow of groundwater within the permit and adjacent areas is to the north-northwest (i.e., away from Dugout Canyon).

Limited flow data is available from monitoring points within Pace Canyon and Rock Canyon Creeks. However, the data included in Appendix 7-7 suggests that flow within Pace Canyon Creek varies seasonally. Data collected at points PC-1A and PC-2 since June 1999, which are included in the Division's water database and in the updated spreadsheets found in Appendix 7-7, supports this determination. Flows in spring/early summer are typically several times greater than in late summer/fall. Also, it is interesting to note that in 2002 and 2003 there have been periods when there is no flow at station PC-2 and flows measured in late summer/fall at PC-1A have been significantly less than in previous years. The drop in flow is undoubtedly related to the prolonged drought the area has been suffering through since 1999. Base flow within this drainage appears to originate from springs discharging from the Castlegate Sandstone, Price River, Flagstaff/North Horn, and Colton Formations. The majority of the flow appears to originate from springs within the North Horn and Flagstaff Formations. A surface water monitoring point (Fan) has been added on Pace Creek at a location approximately 600 feet upstream from the top of the Pace Canyon Fan facilities disturbed area boundary. Surface flows measured at monitoring point Fan indicate that the stream is intermittent and likely fluctuates in flow volume seasonally. Rock Canyon Creek base flow in its upper reaches appears to originate from springs discharging from the Northhorn Formation. Flow data from monitoring site RC-1 indicates the lower sections of Rock Creek generally flow in response to spring runoff and after summer precipitation events.

Surface flows measured at monitoring point RC-1 near the mouth of Rock Canyon indicate that the stream is intermittant and also fluctuates in flow volume seasonally. In 2002 and 2003, flow was

measured at RC-1 only flowed after a significant precipitation event. Again, the lack of flow in this creek is most likely related to the drought conditions that appear to have begun in the area in 1999.

No streamflow data are available for ephemeral drainages in the permit and adjacent areas. When it does occur, ephemeral runoff in the area is expected to occur predominantly in the months of April and May in response to snowmelt runoff and in the months of August and September as a result of thunderstorm activity. Snowmelt may result in flow durations of a few weeks, while thunderstorms are expected to result in runoff with a short duration and high intensity.

Several small impoundments have been constructed in the permit and adjacent areas to capture water for stock watering. Those impoundments where water rights applications have been filed are located as shown on Plate 7-2. The impoundments capture water either from an adjacent spring or from snowmelt.

A UPDES permit application has been issued by the Utah Division of Water Quality as indicated in Appendix 7-6. This application applies to discharge from the sedimentation pond. Discharge from this point occurs only infrequently as a result of pond dewatering or after significant precipitation events. The application also applies to discharges from the underground mine workings.

Surface-water quality samples have been periodically collected in the permit and adjacent areas from stations located on Soldier Creek, Dugout Creek, Pine Canyon, Pace Creek, and Rock Canyon Creek (Plate 7-1). Analytical data from these sources are summarized in Appendix 7-7. These data were obtained from multiple sources, including (but not limited to) the Soldier Creek Coal Company M&RP and annual reports, U.S. Geological Survey publications, the Sage Point-Dugout Canyon permit application filed by Eureka Energy Company in 1980, Appendix 7-3 of this M&RP, and various consultant reports. Since not all monitoring parties were responsible to adhere to UDOGM or SMCRA rules, the laboratory parameters varied between reports. However, the data are still considered valid and appropriate for determining baseline conditions within the permit and adjacent areas. It should be noted that most of the manganese data presented in Appendix 7-3 represent total (as opposed to dissolved) concentrations.

In general, TDS concentrations of surface waters in the permit and adjacent areas vary inversely with the discharge rate. These concentrations also tend to increase in the downstream direction (Waddell et al., 1986). Total suspended solids concentrations in the local surface waters tend to vary directly with the flow rate (Waddell et al., 1986).

The data presented in Appendix 7-7 indicate that the dominant ions in surface water during high-flow periods are calcium and bicarbonate, whereas the dominant ions in the low-flow periods are sodium, magnesium, sulfate, and bicarbonate. During high-flow periods, runoff is rapid and most surface waters only interact chemically with the uppermost regions of the soil zone. Thus, they are dominated by calcium and bicarbonate ions. Furthermore, groundwater contributions from the Flagstaff Formation (where calcium and bicarbonate are the primary ions) dominate the chemical quality of surface water during high-flow periods (see Figure 7-10).

quickly fill, recreating pre-subsidence stream channel conditions. Thus, the potential impact to sediment yield from subsidence in the permit area would be minor and of short duration.

Various sediment-control measures will be implemented during reclamation as the vegetation becomes established. As discussed in Section 542.200 of this M&RP, these measures will include installation of silt fences and straw-bale dikes in appropriate locations to minimize potential contributions of sediment to Dugout Creek and Pace Creek. These measures will reduce the amount of erosion from the reclaimed areas, thereby precluding adverse impacts to the environment.

Acidity, Total Suspended Solids, and Total Dissolved Solids. Probable impacts of mining and reclamation operations on the acidity and total suspended solids concentrations of surface and groundwater in the permit and adjacent areas were addressed previously in this section.

Data presented in Appendix 7-2 and summarized in Section 724.100 of this M&RP indicate that the average TDS concentration of water in the Blackhawk Formation (as measured in inflow to the nearby Soldier Canyon Mine) is approximately 750 mg/l and is of the sodium-bicarbonate type. As noted in Section 724.200, the TDS concentration of water in Dugout Creek ranges from 350 to 500 mg/l. The TDS concentration in Pace Creek ranges between 525 and 840 mg/l with an average TDS of about 620 mg/l. The dominant ions in these waters are calcium, magnesium and bicarbonate during high-flow periods, whereas the dominant ions during low-flow periods are sodium, magnesium, sulfate, and bicarbonate.

These data suggest that the TDS concentration of water in Dugout Creek and Pace Creek can be expected to increase if water is discharged from the mine to the Creek. During periods of low streamflow, the dominant ions in the Blackhawk Formation water, Pace Creek and Dugout Creek should be similar. However, during periods of high streamflow, the dominant cation will be sodium in the Blackhawk water, magnesium in the Pace Creek water, and calcium in Dugout Creek. It should be noted that it is anticipated that the Dugout Canyon Mine will use powdered limestone or dolomite (i.e., calcium-magnesium-carbonate) for rock dust. It is not anticipated that gypsum rock dust (calcium-sulfate) will be used in the mine. Hence, dissolution of rock dust by water in the mine should not influence the chemical type of water in Dugout Creek or Pace Creek if mine water is discharged to the creek.

Typical iron and manganese concentrations in the Blackhawk Formation, Pace Creek and Dugout Creek (as summarized in previous sections) are:

	Blackhawk Formation	Dugout Creek	Pace Creek
Dissolved iron	<0.1 mg/l	<0.01 mg/l	<0.1 mg/l
Total iron	<0.5 mg/l	<1.0 mg/l	<1.0 mg/l
Dissolved manganese	--	<0.01 mg/l	–
Total manganese	<0.1 mg/l	<0.1 mg/l	<0.01 mg/l

These data indicate that the concentration of iron and manganese in Dugout Creek and Pace Creek should not be significantly affected by discharges from the mine.

Dugout Creek and Pace Creek, as part of the lower Price River basin, is classified according to Section R317-2-13 of the Utah Administrative Code (Standards of Quality for Waters of the State) as a class 2B (secondary contact recreation use), 3C (nongame fish and other aquatic life use), and 4 (agricultural use) water. No TDS standards exist for class 2B and 3C water. The TDS standard for class 4 water is 1,200 mg/l.

It should also be noted that the dissolved iron standard for class 3C water is 1.0 mg/l. No dissolved iron standard exists for class 2B or 4 waters. The data presented above indicate that potential discharge water from the mine will not exceed the dissolved iron standard of Dugout Creek or Pace Creek. No standards exist in the R317 regulations for total iron, dissolved manganese, or total manganese. However, the data presented above indicate that potential discharges from the mine to Dugout Creek and Pace Creek will meet the effluent limitations of 40 CFR 434.

Mining in the Gilson seam on the east side of the Right Fork of Dugout Creek resulted in the operator draining the flooded old Knight Ideal Mine working in August 2002 and again in May 2003 to prevent catastrophic flooding of the current Dugout Canyon Mine operations. The old workings contained water with total iron in excess of 1 mg/l and this water was discharged to Dugout Creek at a rate that at times reached 1117 gpm. As a result of draining the old workings, the water discharged to Dugout Creek did have a total iron concentration in excess of the UPDES permit limit of 1mg/l for a short period of time. It appears that water will be continuously drained from the Knight Ideal Mine for the foreseeable future to maintain safe underground working conditions but at a discharge rate expected to be much less than 100 gpm.

No hydrologic impacts have been noted at the adjacent Soldier Canyon Mine nor at the Dugout Canyon Mine due to subsidence. Although tension cracks may locally divert water into deeper formations, resulting in increased leaching of the formation and increased TDS concentrations, the potential of this occurring is considered minimal. This conclusion is based on experience at the Soldier Canyon Mine and on the fact that the shale content of the North Horn Formation, the Price River Formation, and the Blackhawk Formation should cause these subsidence cracks to heal quickly where they are saturated by groundwater flow. Thus, potential impacts on TDS concentrations would be minor and not of significant concern. To date (January 2004), mining and subsidence within the Dugout permit area has not resulted in the loss of surface flows in the Dugout Creek drainage or impacts to ground water discharge rates at the monitored seeps and springs.

Flooding or Streamflow Alteration. Runoff from all disturbed areas will flow through a sedimentation pond or other sediment-control device prior to discharge to Dugout Creek or Pace Creek. Three factors indicate that these sediment-control devices will minimize or preclude flooding impacts to downstream areas as a result of mining operations:

1. The sedimentation pond and sediment traps have been designed and will be constructed to be geotechnically stable. Thus, the potential is minimized for breaches of the sedimentation pond to occur that could cause downstream flooding.
2. The flow routing that occurs through the sedimentation pond and other sediment-control devices reduces peak flows from the disturbed areas. This precludes flooding impacts to downstream areas.
3. By retaining sediment on site in the sediment-control devices, the bottom elevations of Dugout Creek and Pace Creek downstream from the disturbed area will not be artificially raised. Thus, the hydraulic capacity of the stream channel will not be altered.

The volume of streamflow will increase in Dugout Creek and Pace Creek if water is discharged from the mine to the creek. Potential impacts to the creek channel could include the displacement of fines on the channel bottom, and minor widening of the channel. However, the degree of widening will likely be minimized by the increased vigor and quantity of vegetation which will be sustained along the stream channel by the increased availability of water. In particular, it is anticipated that the deciduous streambank vegetative community (see Section 321.100) will increase in density and vigor as a result of mine-water discharges. This effect will occur for the distance downstream that surface flows can be sustained above channel transmission losses. Care will be taken during discharge of this water to avoid flooding of downstream areas. Once mining ceases, the mine will be sealed and no discharges will occur. The streamflow in Dugout Creek and Pace Creek will then return to pre-mining discharge levels.

Following reclamation, stream channels which have been altered by mining operations will be returned to a stable state (see Section 762.100). The reclamation channels have been designed to safely pass the peak flow resulting from the 10-year, 6-hour or the 100-year, 6-hour precipitation event as appropriate for the channel and in accordance with the R645 regulations (Appendix 7-11). Thus, flooding in the reclaimed areas will be minimized. Interim sediment-control measures and maintenance of the reclaimed areas during the post-mining period will preclude deposition of significant amounts of sediment in downstream channels following reclamation, thus maintaining the hydraulic capacity of the channels and precluding adverse, off-site flooding impacts.

Subsidence tension cracks that appear on the surface will increase the secondary porosity of the formations overlying the Dugout Canyon Mine. During the period prior to healing of these cracks, this increased percolation will decrease runoff during the high-flow season (when the water would have rapidly entered the stream channel rather than flowing into the groundwater system). During low-flow periods, the result of this increased percolation will be an increase in the base flow of the stream. Hence, the net result will be a decrease in the flooding potential of the affected stream.

Subsidence under the main fork of Dugout Creek will occur in areas where overburden ranges from 600 to 1200 feet thick. The area of the least amount of overburden, approximately 600 feet, occurs in the southern half of Section 14, Township 13 South Range 12 East. Additionally, subsidence on the right hand fork of Dugout Creek will occur where overburden ranges from 500 feet to 2000 feet.

The least amount of overburden on this fork of the creek occurs in the northeast quarter of Section 23, Township 13 South, Range 12 East. In both areas where the least amount of overburden occurs, the stream channels are lined with several feet of soils and fine grained sediments. Also, the upper Blackhawk Formation, which consists of interbedded shale, mudstone, siltstone, and sandstone, is exposed at the surface in a portion of these low overburden areas. The Castlegate Sandstone is present in the two low overburden areas but is rarely exposed in the channel floors. The current mine plans include mining gate roads and entries under several sections of Pace Creek. However only limited subsidence will occur under Pace Creek in portions of Section 20, Township 13 South, Range 13 East where a longwall panel is projected to be mined (Plate 5-7). The stream channel in this area is lined with several feet of soils and fine grained sediments. Additionally, if surface cracks do occur in the sediments due to subsidence, it is likely any cracks will quickly fill with fine grained material and restrict the water from entering the fractures. The upper units of the Price River Formation which consists of sandstone, and the lower units of the North Horn Formation which consist of interbedded sandstone and mudstone, underlie the stream in this area. The overburden above the Gilson seam where subsidence will occur under Pace Creek will be at least 1000 feet thick or more. As mining progresses to the east, the overburden becomes thicker due to changes in topographic elevation and the dip of the coal beds. Current mine plans do not include subsiding any perennial portion of Rock Canyon Creek.

A subsidence study performed at Burnout Canyon, a perennial stream drainage subsided by long wall mining at the Canyon Fuel Company, LLC Skyline Mines, suggests that thick fine grained soil mantles overlying bedrock appear to prevent noticeable stream flow losses to the bedrock (Rocky Mountain Research Station, 1998). Though the climatic regime and regional stratigraphy are not identical to the Burnout Canyon area, enough similarities exists to suggest that the bedrock, soils, and channel floors should react to subsidence in a similar fashion. As discussed in preceding sections, fractures related to subsidence within the fine grained sediments of the upper Blackhawk Formation in the Soldier Canyon Mine area tend to heal relatively rapidly. Also, fractures within the channel floor would be expected to fill quickly with fine grained sediments and become relatively impermeable. Therefore, the loss of stream flow to the mine is highly unlikely and losses to bedrock beneath the channel, or in the limited areas where bedrock is exposed in the channel floor, would be short lived.

Groundwater and Surface Water Availability. Potential impacts to the availability of surface and groundwater from the Dugout Canyon Mine operations include both decreased and increased stream flows and spring discharges caused by mine-related subsidence, bedrock fracturing, and aquifer dewatering. These potential impacts are discussed below.

Potential for Decreased Spring and Stream Flows

To date, limited surface subsidence has been identified as a result of coal mining in the nearby Soldier Canyon Mine. However, bedrock fracturing routinely occurs in the rock units overlying the mined coal seams. Given the limited number of springs and limited groundwater resources of the Blackhawk, Castlegate, and Price River Formations in the permit and adjacent areas, subsidence

or fracturing would affect the hydrologic balance in the area only if zones of increased vertical hydraulic conductivity were created which extended through the Price River Formation into the North Horn and Flagstaff Formations.

Several lines of evidence suggest that mining-related subsidence and bedrock fracturing have not resulted in decreased stream flows or groundwater discharge in the vicinity of the nearby Soldier Canyon Mine. For instance, although spring SP-10 is likely the result of the upwelling of deep groundwater, it is significant to note that the spring discharge rate has not been affected by mining operations, even though mining has cut through the fracture zone at depths. Furthermore, although considerable seasonal and climatic variability are noted in the hydrographs of springs in the permit and adjacent areas, data for both Soldier Creek and springs which overly the Soldier Canyon Mine workings do not show discharge declines which may be attributed to either subsidence or bedrock fracturing (see Appendix 7-3).

As of December 2003, none of the spring monitoring sites had been undermined and subsided at Dugout Canyon Mine. Therefore, impacts to springs due to subsidence at this mine cannot be fully studied at this time but should have similar effects to ground water as mining at the Soldier Canyon Mine. Ephemeral portions of Fish Creek and Dugout Creek drainages have been subsided and no significant adverse effects to those drainages have been noted to Dugout Creek.

Active groundwater systems in the Flagstaff and North Horn Formations are separated from the Blackhawk groundwater system by the Price River Formation. As discussed in Section 724.100, this formation contains very few springs and is not considered to be a major groundwater resource. Past mining in the Soldier Canyon Mine has not increased the rate of spring discharge from the Price River Formation, indicating that groundwater is not being diverted into this formation. The absence of increased saturation in the Price River Formation due to coal mining indicates that vertical zones of artificially-increased hydraulic conductivity do not extend into the Price River Formation and from thence into the active groundwater systems of the North Horn and Flagstaff Formations.

Data presented in Appendix 7-3 and summarized in Section 724.100 indicate that the Blackhawk groundwater system, in the vicinity of mined coal seams, contains ancient groundwater which is compartmentalized both vertically and horizontally. Coal mining locally dewaters overlying rock layers in the Blackhawk Formation but does not appear to draw additional recharge from overlying or underlying groundwater systems (see Appendix 7-3).

The strong vertical gradients in Blackhawk Formation rock layers underlying actively mined coal seams in the Soldier Canyon Mine and the absence of significant discharge into the mine from these layers indicates that mining does not draw groundwater from the underling Mancos Shale. Additionally, the distinctive solute composition of Mancos Shale groundwater has not been observed inside the Soldier Canyon Mine (see Appendix 7-3).

From the above discussion, it appears that the Soldier Canyon Mine has not decreased groundwater discharge in overlying or underlying groundwater systems. Hence, it is unlikely that coal mining will effect the discharges of any spring as a result of mining in the Dugout Canyon permit and adjacent areas.

Potential for Increased Stream Flows

If sufficient water is encountered in the Dugout Canyon Mine workings to require discharge of that water to the surface, the flow of Dugout Creek and Pace Creek will be increased. To estimate the potential quantity of inflow to the Dugout Canyon Mine, the investigation of Lines (1985) was reviewed. In this investigation, Lines (1985) evaluated groundwater conditions in the Trail Mountain Area, located in the hydrogeologically-similar Wasatch Plateau approximately 23 miles southwest of the proposed Dugout Canyon Mine permit area. Using a finite-difference model, Lines (1985) evaluated potential inflows into a hypothetical coal mine in the Blackhawk Formation assuming hydraulic conductivities of 0.01 ft/day for the Blackhawk Formation and 0.02 ft/day for the Star Point Sandstone. He further assumed hydraulic gradients which varied from 0.041 ft/ft to 0.098 ft/ft. Results of these evaluations are presented in Figure 7-11.

As noted in Section 724.100, the median hydraulic conductivity of the Blackhawk Formation in the vicinity of the permit area is 5.1×10^{-4} ft/day, a factor of 20 lower than the values assumed by Lines (1985). As also noted in Section 724.100, the average hydraulic gradient of the Blackhawk Formation is 0.008 ft/ft, a factor of 5 lower than the lowest values assumed by Lines (1985). Since an increase in the hydraulic conductivity and the hydraulic gradient would tend to increase the inflow to the mine, using the evaluation of Lines (1985) should result in an overestimate of potential inflows to the Dugout Canyon Mine.

According to Plate 5-7 of this M&RP, the planned area of mining west of the proposed North Mains within the Rock Canyon seam will have a length of approximately 10,000 feet and an average width of about 3,000 feet. The planned area of mining within the Gilson seam west of the North Mains will have an average length of 6,000 feet and an average width of 3,000 feet. Similarly, the mine area within the Gilson seam in the vicinity of the Southeast Mains can be divided into two sections; one section having an approximate length of 10,000 feet and an approximate width of 4,000 feet and the other having an average length of 8,500 feet and an average width of 2,000 feet.

Using the above data and Figure 7-11, these mine "segments" can be expected to have steady-state inflows as follows:

- Rock Canyon seam 10,000-foot long and 3,000-foot wide mine segment can have a steady-state inflow of approximately 0.13 cfs (58 gpm),
- Gilson seam (west) 6,000-foot long and 3,000-foot wide mine segment can have a steady-state inflow of approximately 0.09 cfs (40 gpm),

- Gilson seam (east) 10,000-foot long and 4,000-foot wide mine segment can have a steady-state inflow of approximately 0.15 cfs (67 gpm), and
- Gilson seam (east) 8,500-foot long and 2,000-foot wide mine segment can have a steady-state inflow of approximately 0.11 cfs (49 gpm).

Totaling the one mine segment within the Rock Canyon seam and the three segments within the Gilson seam, the mine could be expected to produce approximately 214 gpm.

It should be re-emphasized that this estimate is considered to be conservatively high. Not only do site conditions indicate lower hydraulic conductivities and lower hydraulic gradients, but each section of the mine is being treated in the above analysis as though it was hydraulically isolated. Since there would be significant overlap between the cones of depression created by each section, the inflow to the mine would be further reduced below that estimated above.

The amount of water which will be discharged from the mine will equal the inflow minus that which is consumed in the mining operation (dust suppression and evaporation). Based on experience at the Soldier Canyon Mine, the rate of water to be consumed in the Dugout Canyon Mine is estimated to be 15,000,000 gallons per year (approximately 30 gpm). The remaining 190 gpm (306 acre-feet per year) is the maximum estimated discharge to Dugout Creek. This represents an increase of 6 percent in the estimated average annual flow of Dugout Creek of 5,100 acre-feet (see Section 724.200).

Section 3.1.2.1 of Appendix 7-3 estimates that the maximum discharge from <u>both</u> the Dugout Canyon Mine and a potential mine in the Alkali Creek tract located west of the Soldier Canyon Mine will be 800 gpm. This estimate is based on the assumption that "groundwater discharge rates into mined areas are approximately proportional to mining rates." No specific data are presented in Appendix 7-3 in support of this assumption.

Appendix 7-3 predicts that approximately 400 gpm of the 800 gpm estimated <u>maximum</u> discharge can be attributed to the Alkali Creek tract, leaving an estimated <u>maximum</u> discharge from the Dugout Canyon Mine of 400 gpm. If this maximum rate of 400 gpm could be sustained for a period of one year, this would represent an increase of 13 percent in the estimated average annual flow of Dugout Creek of 5,100 acre-feet (see Section 724.200). Hence, discharges from the Dugout Canyon Mine may result in increases in the flow of Dugout Creek of 6 percent (under steady-state conditions) to 13 percent (under maximum transient conditions).

Potential Hydrocarbon Contamination. Diesel fuel, oils, greases, and other hydrocarbon products will be stored and used at the site for a variety of purposes. Diesel and oil stored in above-ground tanks at the mine surface facilities may spill onto the ground during filling of the storage tank, leakage of the storage tank, or filling of vehicle tanks. Similarly, greases and other oils may be spilled during use in surface and underground operations.

The probable future extent of the contamination caused by diesel and oil spillage is expected to be small for three reasons. First, because the tanks will be located above ground, leakage from the tanks will be readily detected and repaired. Second, spillage during filling of the storage or vehicle tanks will be minimized to avoid loss of an economically valuable product.

Finally, the Spill Prevention Control and Countermeasure Plan which will be developed for the site will provide inspection, training, and operation measures to minimize the extent of contamination resulting from the use of hydrocarbons at the site. This plan is not required to be submitted. However, a copy will be maintained at the mine site as required by the Utah Division of Water Quality.

Road Salting. No salting of roads will occur within the permit area. Hence, this impact is not a significant concern.

Coal Haulage. Coal will be hauled over the county road from the mine portal area to the Soldier Creek Road and thence to its ultimate destination. In the event of an accident which causes coal to spill from the trucks, residual coal following cleanup of the spill may wash into local streams during a runoff event. Possible impacts to the surface water are increased total suspended solids concentrations and turbidity from the fine coal particulates. The probability of a spill occurring in an area sufficiently close to a stream channel to introduce coal to the stream bed is considered small.

In addition to spills, wind may carry coal dust or small pieces of coal from the open top of the coal trucks into creeks near the roads. The impact from fugitive coal dust is considered to be insignificant due to the small amounts lost during haulage in the permit and adjacent areas.

Water Replacement. The water consumed in operating underground equipment, dust suppression, and evaporation is obtained from ground water sources. These underground water sources are not connected to the surface waters in the area. Research has been performed by the mine to verify that water currently entering the mine is not coming from the surface or depleting surface waters. Continued monitoring by the mine of the surface waters and seeps and springs flows in the permit and adjacent areas have shown no discernable impacts due to mining activities. It is the operator's position that the water consumed in operating Dugout Canyon Mine is not depleting surface water sources. In fact, there is an overall net gain to local river systems discharging to the Colorado River as a result of the mine's discharge.

The Permittee will replace the water supply of any land owner if such a water supply proves to be contaminated, diminished or interrupted as a result of the mining operations. First, a determination will be made by the Division in accordance with R645 - 301- 731.800 as to whether or not material damage has occurred. Then, in accordance with Regulation R645-301-525.510, Dugout Canyon Mine will correct any material damage resulting from subsidence caused to surface lands (which includes water rights), to the extent technologically and economically feasible, by restoring the land to a condition capable of maintaining the value and reasonably foreseeable uses that it was capable of supporting before subsidence damage. Negotiations will be held with the water right holders to determine the best plan of action and implementation of water replacement.

729 Cumulative Hydrologic Impact Assessment (CHIA)

A Cumulative Hydrologic Impact Assessment to include the permit and adjacent areas is to be prepared by the Division.

730 OPERATION PLAN

731 General Requirements

This permit application includes an operation plan which addresses the following:

- Groundwater and Surface Water Protection and Monitoring Plan;
- Design Criteria and Plans;
- Performance Standards; and
- Reclamation Plan.

731.100 Hydrologic-Balance Protection

Groundwater Protection. To protect the hydrologic balance, coal mining and reclamation operations will be conducted to handle earth materials and runoff in a manner that minimizes acidic, toxic, or other harmful infiltration to the groundwater system. Additionally, the permittee will manage excavations and disturbances to prevent or control discharges of pollutants to the groundwater.

As indicated in Section 728.300, it is anticipated that an average of approximately 190 gallons per minute of groundwater encountered in the mine will eventually be discharged to Dugout Creek or Pace Creek. This water will be discharged in a controlled manner, in accordance with an approved UPDES permit, via a pipeline from the mine to the creek. The Dugout Creek discharge point is anticipated to be located at the upstream inlet to the Dugout Canyon culvert, UC-5. If the discharge occurs to a point outside of the culvert, riprap will be placed at the outlet of the pipe to prevent erosion. The Pace Creek discharge point will be located southeast of the fan shaft. The pipe will discharge directly to the

creek. The pipe outlet will be riprapped to prevent erosion. Any erosion that occurs at the points of discharge will be repaired as soon as practical.

Surface Water Protection. To protect the hydrologic balance, coal mining and reclamation operations will be conducted to handle earth materials and runoff in a manner that minimizes acidic or toxic drainage, prevents, to the extent possible, additional contributions of suspended solids to streamflow outside the permit area, and otherwise prevents water pollution. Additionally, SCM will maintain adequate runoff- and sediment-control facilities to protect local surface waters.

During initial construction to develop the surface facilities, and prior to installation of all runoff- and sediment-control facilities as outlined in Section 732 of this M&RP, silt fences will be installed along the top bank of Dugout Creek and its eastern tributary in areas prior to disturbance. These silt fences will be installed in accordance with Figure 5-4. If required for control of local erosion, straw-bale dikes may also be installed at the site during initial construction. These dikes will also be installed in accordance with Figure 5-4. The silt fences and straw-bale dikes will be periodically inspected, and accumulated sediment will be removed as needed to maintain functionality. Once the sedimentation pond, ditches, and culverts are installed, the silt fences and straw-bale dikes may be removed.

During initial construction to develop the surface facilities in Pace Canyon, and prior to installation of all runoff- and sediment-control facilities as outlined in Appendix 7-12 of this M&RP, silt fences will be installed along the disturbed area boundary and along the tributary drainages upstream and downstream of the surface facilities. These silt fences will be installed in accordance with Figure 5-4. If required for control of local erosion, straw-bale dikes may also be installed at the site during initial construction. These dikes will also be installed in accordance with Figure 5-4. The silt fences and straw-bale dikes will be periodically inspected, and accumulated sediment will be removed as needed to maintain functionality. Once the sedimentation trap, ditches, and culverts are installed, the interim silt fences and straw-bale dikes will be removed.

Once the runoff- and sediment-control facilities outlined in Section 732 have been installed, these structures will prevent additional contributions of suspended solids to streamflow outside the permit area. A description of sediment control following reclamation is presented in Sections 540 and 760 of this M&RP.

731.200 Water Monitoring

Groundwater Monitoring. Groundwater monitoring to be conducted in the permit and adjacent areas will consist of data collection from monitoring wells, springs, and mine-water discharges. Locations of wells and springs to be monitored are noted on Plate 7-1. The groundwater monitoring

plans presented herein were developed based on information presented in the PHC determination, the baseline hydrologic data, and the geologic data presented in Chapter 6 of this M&RP.

Monitoring wells included in the groundwater monitoring program are GW-10-2, GW-11-2, and GW-24-1. The remaining monitoring wells in the general vicinity are either too remote from the permit area to be indicative of impacts occurring from the Dugout Canyon operations (i.e., GW-5-1, GW-6-1, GW-32-1, and G-58.5) or are completed across multiple aquifers (i.e., GW-19-1), making data interpretation difficult.

The monitoring wells are all completed in the Price River Formation or the underlying Castlegate Sandstone. Because the Castlegate Sandstone immediately overlies the Blackhawk Formation, data collected from these wells allow hydrologic impacts of mining to be evaluated in groundwater systems which overlie the mine workings but underlie the Flagstaff and North Horn groundwater systems.

Water-level measurements will be collected on a quarterly basis when the wells are accessible. Given the ages of the wells and the probable deterioration of the casing materials, no attempts will be made to collect water-quality data from the monitoring wells.

The springs to be included in the operational and post-mining groundwater monitoring program are:

Spring	Formation
SC-65	Colton
SP-20	Flagstaff
SC-14	North Horn
SC-100	Flagstaff (at North Horn FM. Contact)
SC-116	North Horn
200	North Horn
203	North Horn
227	Castlegate Sandstone
259	North Horn
260	Colton

Locations of these springs are noted on Plate 7-1.

The purpose of monitoring the above-listed springs will be to assess potential impacts to groundwater systems overlying the Blackhawk Formation due to subsidence and mine dewatering. Springs have been selected for monitoring in the Colton, Flagstaff, North Horn, and Castlegate Sandstone Formations. These springs are reasonably accessible and, based on the historical data, are representative of conditions within their respective formations.

It should be noted that reliable data have been difficult to collect from the limited number of springs issuing from the Blackhawk Formation within the permit and adjacent areas. As a result, no springs issuing from this formation have been included in the long-term monitoring program.

The ground water monitoring and sampling protocols to be implemented are described in Table 7-4. These protocols are based on the probable hydrologic consequences (PHC) of mining as presented in Section 728 and Appendix 7-3 of this M&RP and the requirements put forth in the Division's regulations. Table 7-4 is the same as that presented in Coal Regulatory Program Directive Tech-004, with the exception that total hardness and total alkalinity are not included. Total hardness, which is primarily of concern in water supplies being developed for domestic use, was not added to the list because summer-home development of the permit area is not an identified post-mining land use. Total alkalinity was not added to the list because the baseline data indicate that acid-generating materials, which may affect the alkalinity of the water, are not present within the permit and adjacent areas.

The protocols set forth in Table 7-4 will be followed during years of normal precipitation as defined in the PHC. Wet or dry (not normal) years for the mine area are defined based on the Natural Resources Conservation Services snow-pack measurements as of March 1 for the Price River-San Rafael River Basin. A wet year occurs when the snow pack water content is greater than 110% of normal and a dry year when the snow pack is less than 70% of normal. After the permit is issued, the following monitoring protocol will be implemented for the first wet or dry year occurrence:

1. Weekly measurements of flow during the first wet year and the first dry year following permit issuance will be obtained. The purpose of these measurements will be to prepare base-flow hydrographs of the monitored springs. Flow measurements during the first wet year and the first dry year will be collected weekly between April 1 and August 31 as conditions permit.

2. Water samples will be obtained during high- and low-flow season in conjunction with the quarterly sampling, if applicable. The samples will be analyzed in accordance with Table 7-4 with the addition of tritium analysis.

In addition to the above regular monitoring, one water sample will be collected at each spring sampling point during low flow period every fifth year, during the year preceding re-permitting, to be analyzed for baseline parameters (Table 7-4).

Groundwater was discovered discharging from old Gilson coal seam workings located on the east side of Dugout Canyon during construction of the Dugout Canyon Mine in September 1998. Prior to construction, this water seeped unnoticed through unconsolidated fill and into Dugout Creek. The water discharging from these old workings will be monitored on a quarterly basis for the parameters listed in Table 7-4 beginning in the fourth quarter of 1998. The monitoring point is labeled MD-1 on Plate 7-1.

Data will be collected from the Dugout Canyon Mine and Pace Canyon Fan Portal mine-water discharge point in accordance with the UPDES permits. No water will be discharged prior to obtaining the necessary UPDES permits. The monitoring requirements proposed herein, including the analytical parameters and the sampling frequency, may be modified in the future in consultation with the Division if the data demonstrate that such a modification is justified.

Data will be collected under the groundwater monitoring program every year following the completion of surface reclamation activities. During the post-mining period, water levels will be collected from the monitoring wells and data/samples will be collected from the identified springs once each year during September or October (i.e., the low-flow season while the sites are still accessible). Groundwater monitoring during the post-mining period will continue until bond release.

All groundwater monitoring data will be submitted to the Division by the end of the quarter following sampling. If analyses of any groundwater sample indicates noncompliance with the permit conditions, the permittee will promptly notify the Division and take immediate appropriate actions. UPDES reporting requirements will be met for the mine-water discharge points. The Snotel data used to determine "wet" or "dry" years, as described previously in this section, will be submitted with the first quarter water monitoring data beginning in the year 2001.

Equipment, structures and other devices used in conjunction with monitoring the quality and quantity of groundwater in the permit and adjacent areas have been or will be installed, maintained, and operated in accordance with accepted procedures. Where feasible, this equipment will be removed or properly abandoned by the permittee when no longer needed.

Surface Water Monitoring. Surface water monitoring to be conducted in the permit and adjacent areas will consist of data collection from streams and sedimentation pond discharges. Locations

of streams to be monitored are noted on Plate 7-1. The surface water monitoring plans presented herein were developed based on information presented in the PHC determination, the baseline hydrologic data, and the geologic data presented in Chapter 6 of this M&RP.

Station DC-1 will be monitored to evaluate surface-water conditions downstream from the proposed surface facilities. Stations DC-2 and DC-3 will provide data concerning background surface-water conditions immediately upstream from the proposed surface facilities. Stations DC-4 and DC-5 will be located at the Castlegate Sandstone-Blackhawk Formation contact and will provide data that will be used to determine the relationship between the Blackhawk Formation and the base flow of Dugout Creek.

PC-1a and PC-2 are located on Pace Creek and will be monitored to evaluate surface-water conditions up gradient and down gradient, respectively, of the permit area. Monitoring point (Fan) has been added on Pace Creek at a location approximately 600 feet upstream from the top of the Pace Canyon Fan facilities disturbed area boundary. Monitoring locations Fan and PC-2 will be monitored to evaluate surface water conditions up gradient and down gradient, respectively, of the Pace Canyon Fan facilities. RC-1 has also been established as monitoring point to obtain baseline data for future mine expansion. Baseline data will be obtained from the aforementioned three sites for three years prior to initiating operational sampling.

Protocols for surface-water monitoring within the permit and adjacent areas are:

- DC-1, FAN - Quarterly data collection in accordance with Table 7-5 (operational parameters). This table is the same as that presented in Coal Regulatory Program Directive Tech-004, with the exception that total hardness and total alkalinity are not included. As explained above, total hardness, which is primarily of concern in water supplies being developed for domestic use, was not added to the list because summer-home development of the permit area is not an identified post-mining land use. Total alkalinity was not added to the list because the baseline data indicate that acid-generating materials, which may affect the alkalinity of the water, are not present within the permit and adjacent areas.

- DC-2, DC-3, PC-1a, PC-2, and RC-1 - Quarterly data collection in accordance with Table 7-5. Collection of gain-loss hydrograph data during the first wet year and the first dry year following permit issuance. Wet and dry years will be defined as noted in the previous groundwater monitoring discussion. The hydrograph will be generated by collecting flow measurements during the first wet year and the first dry year on a weekly basis between April 1 and August 31 as conditions permit.

- DC-4 and DC-5 - Collection of gain-loss hydrograph data during the first wet year and the first dry year following permit issuance, as described above. Collect flow measurements during the first wet year and the first dry year on a weekly basis between April 1 and August 31 as conditions permit. Samples will also be collected for laboratory analyses during the first wet year and the first dry year following permit issuance. Wet and dry years will be defined as noted above. These samples will be collected during the high-flow and low-flow seasons. The samples will be analyzed for tritium and the operational parameters contained in Table 7-5.

In addition to the above regular monitoring, one water sample will be collected at each sampling point during low flow period every fifth year, during the year preceding re-permitting, to be analyzed for baseline parameters (Table 7-5).

The monitoring requirements proposed herein, including the analytical parameters and the sampling frequency, may be modified in the future in consultation with the Division if the data demonstrate that such a modification is justified. Data will be collected from the sedimentation pond discharge point in accordance with the UPDES permit. Data will be collected under the surface water monitoring program every year until bond release.

All surface water monitoring data will be submitted to the Division by the end of the quarter following sampling. If analyses of any surface water sample indicates noncompliance with the permit conditions, SCM will promptly notify the Division and take immediate appropriate actions. UPDES reporting requirements will be met for the sedimentation pond discharge point.

TABLE 7-5

Surface Water Monitoring Program

Field and Laboratory Measurement Protocol

Streams	Protocol	Comments
DC-1	1	Located on Dugout Creek downstream of mine
DC-2	2	Located on Dugout Creek immediately upstream of mine on left-hand fork
DC-3	2	Located on Dugout Creek immediately upstream of mine on right-hand fork
DC-4	3	Located on Dugout Creek upstream of mine on west fork of left-hand fork
DC-5	3	Located on Dugout Creek upstream of mine on east fork of left-hand fork
PC-1a	2	Located on Pace Creek on the eastern edge of State Coal Lease ML 48435-OBA
PC-2	2	Located on Pace Creek on the western edge of State Coal Lease ML 48435-OBA
RC-1	2	Located on Rock Creek on the southern edge of State Coal Lease ML 48435-OBA
FAN	1	Located on Pace Creek above fan facilities

Protocols

1 Stream: quarterly operational surface water quality measurements analyzed as per parameters listed below.

2 Stream: quarterly operational surface water quality measurements analyzed as per parameters listed below except during first wet or dry years when weekly flow will be obtained from April 1 through August 31, as conditions permit, in addition to quarterly samples.

3 Stream: weekly flow measurements during first wet or dry year will be obtained from April 1 through August 31 as conditions permit. Also during the first wet or dry year, one operational laboratory sample and one tritium sample will be obtained at these sites during high and low flow season.

Surface Water Quality Parameters

FIELD MEASUREMENTS	REPORTED AS
Flow	gpm or cfs
pH	pH units
Specific Conductivity	μs/cm @ 25°C
Dissolved Oxygen	mg/l
Temperature	°C

Laboratory Parameters	Reported As	Operational Monitoring	Baseline Monitoring
Acidity	mg/l		X
Aluminum (Dissolved)	mg/l		X
Ammonia	mg/l		X
Arsenic (Dissolved)	mg/l		X
Boron (Dissolved)	mg/l		X

Equipment, structures and other devices used in conjunction with monitoring the quality and quantity of surface water in the permit and adjacent areas have been or will be installed, maintained, and operated in accordance with accepted procedures. Where feasible, this equipment will be removed or properly abandoned by SCM when no longer needed.

Monitoring and Mitigation Plan Pace Creek

Dugout Canyon Mine plans to leave a barrier under the majority of Pace Creek within the permit boundary. The stretches of Pace Creek (10/04 mine map) which are planned for undermining are above entry development, not longwall panels. There is approximately 1000 feet of stream channel having over 500 feet of cover planned for mining in 2007, 400 feet has approximately 900 feet of cover planned for mining in 2008 and approximately 100 feet has 1250 feet of cover planned for mining in 2008-2009. A surface water monitoring and mitigation program will be initiated in this area prior to potential subsidence occurring. This monitoring program will include conducting a pre-mining subsidence photgraphic survey of the stream channel from surface water monitoring location PC1A to where Pace Creek leaves the SW1/4SW14 Section 20, T13S, R13E and a single reference site below the Pace Canyon fan site. The purpose of the photographs will be to provide a visual record of the stream channel prior to mining disturbance. Five reference sites will be identified within the photographed portion of Pace Creek where the monitoring of surface ground water flows, channel width and general geomorpholgy will occur. These reference sites will be established during low flow in the creek and monitored as outlined by the USDA Forest Service (Stream Channel Reference Sites: An Illustrated Guide to Field Technique. General Technical Report RM-245, Harrelson et. Al., 1994). The photographing of Pace Creek and the selection of monitoring sites will be done no later than the Spring of 2006 and submitted as part of the 2006 annual report.

The surface water flows and channel width at these stations will be monitored on a monthly basis, when accessible, while mining is occurring within the 15 degree angle-of-draw of the stream channel. The Division will be notified if the area is inaccessible due to road or climatic conditions and the monitoring could not be accomplished. Once mining has been completed within the angle-of draw, the sites will be monitored annually for up two years following undermining. A report on the subsidence related impacts, if any, to the surface water flows, will be provided monthly to the Division during monthly monitoring and annually during annual monitoring.

Mitigation will implement the Best Technology Currently Available in association with the repair of damage to the Pace Creek stream channel. The repairs may include the use of bentonite/soil mixes to fill persistant cracks that appear to be diverting water. Bentonite may also be used to line portions of the creek floor where leakage appears to be occurring. Other methods or chemicals, if environmentally safe and available, may be employed if bentonite and/or bentonite/soil mixes are ineffectual.

731.300 Acid- and Toxic-Forming Materials

Analyses presented in Chapter 6 of this M&RP indicate that acid- and toxic-forming materials are not present within the permit area. Parameters defining acid- and toxic-forming materials will periodically be monitored as described in Chapter 6 of this M&RP. In the event that acid- or toxic-forming materials are identified, they will be disposed of in appropriate waste-rock disposal facilities as described in Chapter 5 of this M&RP.

731.400 Transfer of Wells

Before final release of bond, exploration or monitoring wells will be sealed in a safe and environmentally sound manner in accordance with R645-301-631, R645-301-738, and R645-301-765. Ownership of wells will be transferred only with prior approval of the Division. The conditions of such a transfer will comply with State and local laws. The permittee will remain responsible for the management of the wells until bond release in accordance with R645-301-529, R645-301-551, R645-301-631, R645-301-738, and R645-301-765.

731.500 Discharges

Discharges into an Underground Mine. No discharges of surface water will be made to an underground mine in the permit and adjacent areas.

Gravity Discharges from an Underground Mine. No gravity discharges will be made from an underground mine in the permit and adjacent areas.

731.600 Stream Buffer Zones

The surface facilities for the Dugout Canyon Mine will be constructed within 100 feet of Dugout Creek (a perennial stream, intermittent adjacent to mine facilities) and Pace Creek (an intermittent stream adjacent to fan facilities). However, surface runoff- and sediment-control facilities designed for the site (as discussed in subsequent sections of this chapter) will ensure that coal mining and reclamation operations will not cause or contribute to the violation of applicable Utah or federal water standards and will not adversely affect the water quantity and quality or other environmental resources of the stream.

Stream Channel Diversions. Temporary or permanent stream channel diversions will comply with R645-301-742.300.

Buffer Zone Designation. The area surrounding the streams that is not to be disturbed will be designated as a buffer zone, and SCM will mark those zones as specified in Section 521.200 of this M&RP.

731.700 Cross Sections and Maps

The locations of water rights for current users of surface water flowing into, out of, and within the permit and adjacent areas is provided on Plate 7-2. The locations of each water diversion, collection, conveyance, treatment, storage, and discharge facility to be used in the Dugout Canyon area is presented on Plate 7-5 or in Addendum A to Appendix 7-9.

Locations and elevations of each station to be used for water monitoring during coal mining and reclamation operations are presented on Plate 7-1. The design details and cross sections for the sedimentation pond are provided on Plate 7-4. Other relevant cross sections or maps are presented and discussed in Chapter 5 of this M&RP.

731.800 Water Rights and Replacement

No surface mining will occur in the Dugout Canyon Mine permit area.

732 Sediment Control Measures

The sediment control measures within the permit area have been designed to prevent additional contributions of sediment to streamflow or to runoff outside the permit area. In addition, they have been designed to meet applicable effluent limitations, and minimize erosion to the extent possible.

The structures to be used for the runoff-control plan for the permit area include disturbed and undisturbed area diversion channels, a sedimentation pond, containment berms, silt fences, and road diversions and culverts.

Sediment control measures for the Pace Canyon Fan Portal Area are discussed in Appendix 7-12.

732.100 Siltation Structures

The siltation structure within the permit area will be a sedimentation pond as described in Section 732.200.

732.200 Sedimentation Ponds

There will be a single sedimentation pond operating at the mine facility located at the southwest end of the disturbed area. The sedimentation pond topography and cross sections are presented on Plate 7-4 of this M&RP. Details regarding sedimentation pond design are presented in Appendix 7-8. The staff gauge in the pond will be marked to indicate the 60% clean-out elevation as defined in Section 742. The sedimentation pond is defined as a Class A pond in accordance with TR-60 (U.S. Soil Conservation Service, 1976).

If sediment has accumulated to the 60% clean-out elevation, the pond will be cleaned. The sediment will be transported and either stored at the Banning Loadout or disposed of at the approved waste rock disposal sites as described in Chapter 5 of this M&RP or pumped back into the sealed, abandoned "Gilson West - Old Workings".

The sedimentation pond is within the disturbed area boundary and is subject to final reclamation. The area is included in the calculation of the disturbed area subject to bonding and in the calculation of final reclamation costs.

Compliance Requirements. The sedimentation pond will be maintained until removal in accordance with the reclamation plan (see Section 540 of this M&RP). When the pond is removed, the land will be revegetated in accordance with the reclamation plan defined in Section 540.

The sedimentation pond was designed to contain 0.40 acre-foot of sediment accumulation before being cleaned out. The sedimentation pond will fully contain the runoff from the 10-year, 24-hour storm event in addition to sediment accumulation. The primary spillway for the sedimentation pond will adequately pass the peak flow resulting from the 25-year, 6-hour precipitation event. The pond has also been designed with an emergency spillway to release water from the pond in the event that the primary spillway becomes blocked.

Additional design standards for the pond are presented in Section 742.

MSHA Requirements. MSHA requirements defined in 30 CFR 77.216 are not applicable since the sedimentation pond will not impound water or sediment to an elevation of 20 feet or more above the upstream toe of the structure. The pond will also store a volume less than 20 acre-feet.

732.300 Diversions

The objective of the runoff control plan is to isolate, to the maximum degree possible, runoff from disturbed areas from that of undisturbed areas. This is accomplished by:

- Allowing all upstream runoff in Dugout Creek to bypass the disturbed area through the use of culverts;
- Routing runoff from the adjacent undisturbed areas above the facilities through culverts and diversion ditches where feasible to bypass the disturbed area; and
- Routing any runoff from undisturbed areas which enters the disturbed area into the sediment control system.

The location of each diversion ditch or culvert for the main facility area is presented on Plate 7-5 or in Addendum A to Appendix 7-9. Details regarding design of the diversions are presented in Appendix 7-9. A brief list of the proposed diversion structures follows (refer to Plates 7-6 through 7-8 for the location of each watershed boundary):

Diversion Ditches:

- Interception ditch UD-1 along the southeast border of the disturbed area will collect runoff from adjacent undisturbed watersheds and direct the runoff into Dugout Creek.
- Disturbed drainage ditches DD-1 through DD-7 will be located within the main portion of the facility pad, directing disturbed-area runoff from this pad toward the sedimentation pond.
- Disturbed drainage ditch DD-8 will be located along the north edge of the road that accesses the large and small substation pads. Runoff from ditch DD-8 will be conveyed to the sedimentation pond via culvert DC-7 and ditch DD-7. The runoff from the small substation pad area reports to the sediment pond by way of DD-8, DC-7 and DD-7.
- Disturbed drainage ditch DD-9 will be located on the southeast edge of the portal pad and will convey runoff to the sedimentation pond via ditches DD-6 and DD-7 and culvert DC-5.
- Disturbed drainage ditch DD-10 will be located on the north side of the access road to the portal pad. This ditch will convey runoff to the sedimentation pond via culverts DC-2, DC-3, and DC-5 and ditches DD-5, DD-6, and DD-7.
- Disturbed drainage ditch DD-11 will be located along the west side of the water-tank access road, extending to the interim crest of the road. This ditch will convey runoff to the sedimentation pond via culverts DC-1, DC-2, DC-3, and DC-5 and ditches DD-5, DD-6, and DD-7.
- Disturbed drainage ditches DD-12 through DD-16 will be located along the water-tank access road. Because of the crest in the road between ditches DD-11 and DD-12, runoff from these ditches cannot be conveyed to the sedimentation pond. Thus,

alternate sediment control will be provided for the discharge from these ditches (see Section 742.200 of this M&RP).

- Disturbed drainage ditch DD-17 will be located on the northwest border of the water-tank pad. The presence of the above-mentioned crest in the access road requires that alternate sediment control be provided for the discharge from this ditch (see Section 742.200 of this M&RP).

Diversion Culverts:

- Culverts DC-1, DC-2, DC-3, and DC-5 will be located along the northwest portion of the main facility pad. These culverts will convey runoff from and to various ditches leading to the sedimentation pond. Culverts DC-1 and DC-2 will be connected via a drop inlet, into which ditch DD-10 will discharge.
- Culvert DC-4 will convey runoff from the portal pad via a drop inlet to the lower facility pad. This runoff will ultimately discharge to the sedimentation pond via ditches DD-6 and DD-7 and culvert DC-5.
- Culvert DC-6 will convey water from ditches located on the south side of the facility pad to the sedimentation pond. . The drop inlet structure designs for this culvert are included in Attachment B of Appendix 7-11.
- Culvert DC-7 will convey water from the substation access road into ditch DD-7 and then to the sedimentation pond. A drop inlet will be used on this culvert. The outlet of this diversion into the sediment pond will be riprapped.
- Culverts DC-7A, DC-8 and DC-9 will be located along the water-tank access road, conveying runoff from the roadside ditches to Dugout Creek. Because of the presence of the crest in the road between the facility pad and these culverts, this runoff cannot be conveyed to the sedimentation pond. Hence, alternate sediment control will be provided as noted in Section 742.200 of this M&RP.
- Culverts DC-10 and 11, will be located along the northeast portion of the main facility pad. These culverts will convey disturbed area runoff to the sedimentation pond.
- Culverts UC-1 and UC-2 will convey undisturbed-area runoff from watersheds WS-4 and WS-10, respectively, to the Dugout Creek bypass culvert (UC-5). Culvert UC-3 will convey undisturbed-area runoff from ditch UD-1 to the Dugout Creek culvert (UC-5).
- Culvert UC-4 will be located on the eastern tributary of Dugout Creek. Containing this tributary in a culvert will prevent uncontrolled sediment from the adjacent disturbed area from impacting this water during the operational period. Gabion baskets will be installed adjacent to the culvert as shown on Dwg. No. B101 in Appendix 7-9.

- Culvert UC-5 is located on the main branch of Dugout Creek, containing the creek through the disturbed area and allowing coal-haul trucks to enter and leave the loadout pad and mine access/haul road. Installation of this culvert will protect Dugout Creek from sediment which may be generated from the adjacent disturbed areas.
- Culvert UC-6 will convey undisturbed-area runoff from watershed WS-2 to culvert UC-5.

Diversion Swale:

- Swale SW-1 will capture and convey sheet flow from the road and pad before it exits the disturbed area. Runoff will be directed to the sediment pond at the northwest end of the swale. The discharge point of the swale will be riprapped. The design calculations for SW-1 and riprap are included tin Attachment B of Appendix 7-9.

All diversion ditches will be maintained with adequate riprap or alternative erosion protection in the ditch sections where flow velocities are predicted to be sufficiently high to require a ditch lining. Adequate ditch capacities will be maintained in all ditch sections. Culverts will be kept free of debris and each outlet will be protected with riprap where deemed necessary. Detailed diversion design is presented in Section 742.

732.400 Road Drainage

Road drainage facilities will include diversion ditches, culverts, and containment berms. The road drainage diversion ditches and culverts for the mine site are included in the list of diversions presented in Section 732.300 above. Additional road drainage design information is presented in Section 742.

All road drainage diversions will be maintained and repaired to original condition following the occurrence of a large storm event. Culvert inlets and outlets will be kept clear of sediment and other debris. Culverts to be installed on Dugout Creek to permit turning of the coal haul trucks are discussed in Section 742.300.

733 Impoundments

733.100 General Plans

There will be a single sedimentation pond operating at the mine facility as described in Section 732.200. The sedimentation pond will be located in the southwest corner of the disturbed area. The sedimentation pond topography and cross sections are presented on Plate 7-4 of this M&RP. Detailed design information is presented in Appendix 7-8. Details regarding the impoundments at the Pace Canyon Fan Portal Site can be found in Appendix 7-12.

Certification. All maps and cross sections of the sedimentation pond have been prepared by or under the direction of, and certified by a qualified, registered, professional engineer.

Maps and Cross Sections. The topography and cross sections for the sedimentation pond are provided on Plate 7-4 of this M&RP.

Narrative. A description of the sedimentation pond is presented in Sections 732.200 and 742 of this M&RP.

Subsidence Survey Results. No underground coal mining will occur beneath the proposed sedimentation pond. Therefore, there will be no effects on the pond or pond embankment from subsidence.

Hydrologic Impact. The hydrologic and geologic information required to assess the hydrologic impacts of the proposed sedimentation pond are presented in Section 724 and Chapter 6 of this M&RP, respectively.

Design Plans and Construction Schedule. There are no additional structures proposed for the mining operation at this time. Any structures proposed in the future will not be constructed until the Division has approved the detailed design plan for the structure.

733.200 Permanent and Temporary Impoundments

Requirements. The sedimentation pond has been designed using current, prudent engineering practices. Specific foundation design and construction criteria are presented in Chapter 5 of this M&RP. Specific hydrologic design criteria for the pond are presented in Section 743. The pond will be inspected regularly based on the schedule contained in Section 514.300.

Permanent Impoundments. There are no permanent impoundment structures proposed for use in mining and reclamation operations within the permit and adjacent areas.

Temporary Impoundments. The Division's authorization is being sought for the construction of the sedimentation pond as a temporary impoundment at the mine as part of coal mining and reclamation operations.

Hazard Notifications. The sedimentation pond will be examined for structural weakness and erosion in accordance with the schedule presented in Section 514.300. A report of these findings will be submitted to the Division as outlined in Section 514.300.

734 Discharge Structures

Discharge structures within the Dugout Canyon Mine facilities area will consist of the primary and emergency spillway on the sedimentation pond and a discharge line from the underground workings. Discharge structures at the Pace Canyon Fan Portal Site will consist of a spillway from the sediment trap and discharge line (UPDES) from the underground workings. All discharge structures will be constructed and maintained to comply with R645-301-744.

735 Disposal of Excess Spoil

There will be no excess spoil generated at the mine.

736 Coal Mine Waste

Coal mine waste will be stored and disposed of as described in Chapter 5.

737 Noncoal Mine Waste

Noncoal mine waste will be stored and disposed of as described in Chapter 5.

738 Temporary Casing and Sealing of Wells

Each groundwater monitoring well identified on Plate 7-1 will be operated and maintained as described in Section 748.

740 DESIGN CRITERIA AND PLANS

741 General Requirements

This M&RP includes site-specific plans that incorporate minimum design criteria for the control of drainage from disturbed and undisturbed areas. The design criteria and plans for the Pace Canyon Fan Portal Site can be found in Appendix 7-12.

742 Sediment Control Measures

742.100 General Requirements

Design. Sediment-control measures have been designed to provide the following:

- Prevent additional contributions of sediment to stream flow or to runoff outside the permit area;
- Meet the effluent limitations defined in Section 751; and
- Minimize erosion to the extent possible.

Measures and Methods. The sediment control measures at the mine will include practices carried out within and adjacent to the disturbed area. Sediment control methods will include:

- Retention of sediment within the disturbed area;
- Diversion of runoff away from the disturbed area;
- Diversion of runoff using channels or culverts through disturbed areas to prevent additional erosion;

by installing silt fences or straw-bale dikes in the ditch immediately upstream from the inlet to culvert DC-7A. These sediment-control devices will be installed in accordance with Figure 5-4. Sediment which accumulates behind these devices will be periodically removed and either spread on the adjacent road or disposed of with waste-rock generated from the mine.

Sediment-control measures will be implemented during the relocation of the west fork of Dugout Creek. These measures will include installation of three straw-bale dikes and/or reinforced silt fences in appropriate locations within the creek channel below the relocation site to minimize potential contributions of sediment to Dugout Creek. The straw-bale dikes/silt fences will remain in-place until channel relocation and pad construction is completed.

Pace Canyon Fan Portal Facilities

The entire site is an ASCA area. Sediment from the site will be controlled by a combination of contemporaneous reclamation, revegetation, gravel, and the use of a sediment trap. Plate PC7-5A identifies the various alternative sediment control methods that will be used and where the methods will be implemented. Other than the realigned road and a small area on the outslope of the sediment trap embankment the entire site will drain to the sediment trap. Although calculations in Appendix 7-12, Attachment 2 demonstrate that the contemporaneous reclamation, gravel, and revegetation will reduce the sediment yield to less than pre-mining conditions a sediment trap will be constructed to contain sediment generated by the site.

Sedimentation Ponds. A single sedimentation pond has been designed for the Dugout Canyon Mine facilities. The sedimentation pond will be located in the southwest corner of the disturbed area. This pond will function individually.

The sedimentation pond will be located as near as possible to the disturbed areas as indicated on Plates 7-4 and 7-5. The pond will not be located within a perennial stream channel.

Design, Construction, and Maintenance

Sediment Storage Volume. The sedimentation pond has been designed to control sediment from disturbed and undisturbed areas. The disturbed area contributing runoff to the sedimentation pond contains 16.9 acres from watersheds DWS-1 through DWS-7 (portions of which will be undisturbed or contemporaneously reclaimed - see Appendix 7-9). The undisturbed area contributing runoff to the sedimentation pond contains 33.7 acres from watersheds WS-1, -3, -5, -6, -7, -8, -9a, and -11. Refer to Plates 7-7 and 7-8 for a delineation of watershed boundaries.

The sedimentation pond was designed to fully contain the sediment generated by disturbed and undisturbed areas. Based on calculations presented in Appendix 7-8, the sedimentation pond has been designed with a sediment storage capacity of 0.40 acre-foot. The elevation of the maximum sediment level will be 6954.4 feet. The 60% sediment clean-out volume of 0.24 acre-foot will have an elevation of 6951.7 feet.

Detention Time. An adequate detention time will be provided in the pond to allow the effluent to meet UPDES and 40 CFR Part 434 limitations. The decant water will be sampled and discharged from the pond in accordance with the above referenced effluent limitations.

Design Event. The sedimentation pond has been designed to fully contain runoff resulting from the 10-year, 24-hour precipitation event.

Pond Description. Several drainage areas, identified on Plates 7-7 and 7-8, will contribute runoff to the sedimentation pond. The disturbed drainage areas contributing to the pond will be DWS-1 through DWS-7 and the pond itself. The undisturbed drainage areas contributing to the pond will be WS-1, -3, -5, -6, -7, -8, -9a, and -11, as well as portions of the above-mentioned "disturbed" watersheds. These undisturbed drainage areas will discharge to the pond because construction of diversion ditches along the top of cut slopes may create cut-slope stability problems. Also, constructing ditches on steep slopes is expensive and disturbs a larger area. The selected course of action was to allow undisturbed runoff to flow onto the disturbed area and be treated in the sedimentation pond.

The curve numbers used to determine the runoff volumes were based on information presented in Appendix 7-8 and Appendix 7-9. The curve number for the pond area was assumed to be 100. Refer to Table 7-6 for a list of all disturbed and undisturbed watershed areas contributing to the sedimentation pond and their associated curve numbers.

The storm runoff volume to the sedimentation pond resulting from the 10-year, 24-hour storm event was calculated to be 69,913 cubic feet (1.60 acre-feet). The calculations, presented in Appendix 7-8, are based on hydrologic design methods described in Appendix 7-10. As presented above, the maximum sediment storage volume is 0.40 acre-foot (17.424 cubic feet). Thus, the capacity of the pond at the elevation of the primary spillway is 87,337 cubic feet (2.00 acre-feet), assuming the spillway does not spill during the 10-year, 24-hour storm.

In order to fully contain the runoff from the 10-year, 24-hour storm event and the maximum sediment storage, the primary spillway on the sedimentation pond will be set at an elevation

structures have been located to minimize downstream sedimentation and flooding. Diversion ditches and culverts for all roads are described in Section 732.300.

A generic cross section showing a typical diversion ditch adjacent to a road is provided in Figure 5-1. This cross section is typical of the ditches to be installed at the Dugout Canyon Mine. As noted in Table 7-8, each of the ditches to be installed at the site will have positive freeboard when flowing at the design rate. Hence, the ditches have been designed to avoid spreading of water on the adjacent roads during the design event.

Primary Roads. The location of primary roads is discussed in Section 527 and presented on Plate 5-2 of this M&RP. The county road which accesses the mine site will be located by Carbon County, where practical, along the alignment of the existing dirt road to minimize erosion and be on stable ground. The access road will not ford Dugout Creek. However, prior to entering the disturbed area, the county road will cross Dugout Creek using a 10' diameter circular corrugated metal pipe culvert with headwalls. As this culvert is located outside the disturbed area boundary and part of the county road, design of this structure was handled by Carbon County. Within the disturbed area, Dugout Creek will be diverted through culverts UC-4 and UC-5 to prevent uncontrolled sediment from reaching the stream and to allow for efficient use of the site. A riprap-lined energy dissipater will be constructed downstream from the outlet of culvert UC-5 to withstand the peak flow from a 100-year, 6-hour storm event. Calculations regarding the design of the energy dissipater can be found in Appendix 7-9.

The drainage control system for the primary roads within the permit area includes diversion ditches and culverts. Except for culverts UC-4 and UC-5, the diversions will adequately pass the peak runoff from the 10-year, 24-hour precipitation event. Culverts UC-4 and UC-5 have been designed to convey the peak flow resulting from the 100-year, 6-hour precipitation event. Culverts will be constructed to avoid plugging or collapse and erosion at the inlet or outlet. Drainage details for the access road are presented in Section 732.300.

Pace Canyon Road

Runoff and erosion on the road will be controlled by the use of water bars. The water bars will divert any runoff from the road before an erosive volume of water can accumulate. Three water bars will be placed approximately 200 feet apart on the road. The water bars will be placed as shown on Plate PC7-5. The first water bar will be placed approximately 5 feet upgradient of the start of the realigned road to prevent any runoff rom the existing road from flowing onto the road. The other two water bars will divert any runoff that has fallen on the realigned road off the road into well vegetated areas. Due to the berm running parallel to the road only precipitation falling directly on the realigned road could impact the road. Therefore, very little runoff is expected to be generated. The little runoff generated by the realigned road will be controlled by the water bars.

743 Impoundments

All pertinent information regarding the sedimentation pond is presented in Sections 732.200 and 742.200.

744 Discharge Structures

The discharge structures within the permit area will be the primary and emergency spillways on the sedimentation pond and a discharge line from the underground workings. The spillways on the sedimentation pond will adequately pass the peak discharge from the 25-year, 6-hour precipitation event. Detailed information concerning the sedimentation pond is presented in Sections 732.200 and 742.200.

The primary spillway on the sedimentation pond will consist of a 24-inch steel riser with an oil-skimmer connected to a 24-inch diameter CMP barrel. The emergency spillway will consist of a riprap-lined open channel. The spillways will discharge directly to Dugout Creek. The design calculations for the spillways are presented in Appendix 7-8. The spillway details are presented on Plate 7-4.

744.100 Erosion Protection

The only discharge structures associated with an impoundment will be the spillways from the sedimentation pond. The primary spillway will consist of a 24-inch riser connected to a 24-inch diameter CMP barrel. The 24-inch CMP barrel will discharge directly to Dugout Creek. The slope of the 24-inch CMP barrel has been designed to be 2.2%. The peak discharge from the sedimentation pond during a 25-year, 6-hour storm event is 3.93 cfs. The flow velocity at the spillway outlet under peak flow conditions is 4.50 fps. This velocity is not considered to be erosive. The natural channel will be evaluated during construction to verify that materials in the native channel can withstand the projected peak flow velocity. The calculations for the spillway outlet are presented in Appendix 7-8.

744.200 Design Standards

All discharge structures within the permit area have been designed and will be constructed according to standard engineering procedures.

745 Disposal of Excess Spoil

There will be no excess spoil within the permit area.

A sediment trap will be constructed in association with the Pace Canyon Fan Portal site. Contemporaneous reclamation and gravel should adequately control sediment at the site, with the sediment trap providing an extra measure of protection. Details regarding this sediment trap can be found in Appendix 7-12.

752.100 Siltation Structures and Diversions

Siltation structures and diversions will be located, maintained, constructed and reclaimed according to plans and designs presented in Sections 732, 742, and 763 of this M&RP.

752.200 Road Drainage

All roads will be located, designed, constructed, reconstructed, used, maintained and reclaimed according to plans and designs presented in Sections 732.400, 742.400, and 762 of this M&RP. All roads have been designed to:

- Control or prevent erosion, siltation and the air pollution attendant to erosion by vegetating or otherwise stabilizing all exposed surfaces in accordance with current, prudent engineering practices;
- Control or prevent additional contributions of suspended solids to stream flow or runoff outside the permit area;
- Neither cause nor contribute to, directly or indirectly, the violation of effluent standards given under Section 751;
- Minimize the diminution to or degradation of the quality or quantity of surface- and groundwater systems; and
- Refrain from significantly altering the normal flow of water in streambeds or drainage channels.

753 Impoundments and Discharge Structures

Impoundments and discharge structures will be located, maintained, constructed and reclaimed as described in Sections 733, 734, 743, 745, and 760 of this M&RP.

754 Disposal of Excess Spoil, Coal Mine Waste and Noncoal Mine Waste

Disposal areas for coal mine waste and noncoal mine waste will be located, maintained, constructed and reclaimed as described in Sections 736, 737, 746, 747, 760 and Chapter 5 of this M&RP.

755 Casing and Sealing of Wells

All wells will be managed as described in Sections 551, 748 and 765 of this M&RP.

760 RECLAMATION

761 General Requirements

A detailed reclamation plan for the mine is presented in Section 540. In general, SCM will ensure that all temporary structures are removed and reclaimed. Other than for restoration of natural drainage patterns and drainage features associated with the water-tank access road (which will be retained for access to private land as part of the post-mining land use), no permanent diversions are included in the reclamation plan.

762 Roads

A road not to be retained for use under an approved post-mining land use will be reclaimed immediately after it is no longer needed for coal mining and reclamation operations.

762.100 Restoring the Natural Drainage Patterns

All natural drainage patterns will be restored during reclamation. Details regarding the reclamation of stream channels are provided in Appendix 7-11. As noted in that appendix and on Plate 5-5, the following channels will be restored during reclamation:

Channel	Location
RD-1	Upstream ephemeral tributary on the west side of Dugout Creek
RD-2	Middle ephemeral tributary on the west side of Dugout Creek
RD-3	Eastern perennial tributary of Dugout Creek
RD-4	Upper Dugout Creek
RD-5	Dugout Creek below confluence of RD-3 and RD-4
RD-6	Ephemeral channel across the reclaimed survey monument access road
RD-7	Upstream ephemeral tributary on the east side of Dugout Creek
RD-8	Middle ephemeral tributary on the east side of Dugout Creek
RD-9	Downstream ephemeral tributary on the west side of Dugout Creek
RD-10	Downstream ephemeral tributary on the east side of Dugout Creek

In accordance with R645-301-742.333, channels RD-1, RD-2, and RD-6 through RD-10 were designed to safely convey the peak flow resulting from the 10-year, 6-hour precipitation event. With the exception of RD-10, each channel was designed with a bottom width of 1 foot, a channel depth of 1 foot, 2H:1V side slopes, and a median riprap diameter of 3 inches. The riprap will be installed in these ephemeral drainages as an extra erosion-protection measure, even though design

velocities are not expected to be erosive. RD-10 was designed with a similar cross section, but with a median riprap diameter of 6 inches.

During reclamation of the Pace Canyon Fan Portal Site two drainages will be affected. Both drainages had been disturbed by the road building activities prior to the construction of the Dugout Canyon Mine and Pace Canyon Fan Portal Facilities. In both drainages a section of the channel had been destroyed by the road construction. During reclamation these drainages will be reestablished. Reclamation channel PCRD-1 will be constructed in the drainage south of the portal with the exception of where the channel crosses the road. At the road crossing a swale will be constructed. Reclamation channel PCRD-1 will be constructed with a bottom width of 2.5 feet, side slopes of 2:1, depth of 1 foot and D_{50} = 6 inch riprap. The swale will have side slopes of 7.5:1 and a depth of 1 foot. The culvert in the drainage north of the site will be replaced by a swale with a bottom width of 5 feet, side slopes of 7.5:1 and a depth of 1 foot. In accordance with R645-301-742.333, these channels were designed to safely convey the peak flow resulting from the 10-year, 6-hour precipitation event. See Plate PC5-5 in Appendix 5-10 and Attachment 3 in Appendix 7-12 for the reclamation channel location and calculations respectively.

As a result of pre-SMCRA disturbances at the site, Dugout Creek and its eastern tributary have experienced significant instability. This instability is especially noteworthy in a 300-foot section of Dugout Creek near the central portion of the proposed disturbed area. In this section, past blockage of a culvert installed by prior operators resulted in a re-routing of the creek, together with extensive downcutting (both up- and downstream from the blockage) and erosion of the site. The results of this damage are evident throughout, as well as up- and downstream from, the proposed disturbed area as headcutting and deposition have occurred.

SCM is committed to restoring the Dugout Creek channel to a more natural functioning condition as a result of site reclamation. In an effort to determine the best means for accomplishing this channel restoration, Dugout Creek was evaluated within the proposed disturbed and adjacent areas by Mr. Galen W. Williams of EarthFax Engineering, Inc. Mr. Williams, who is a registered Professional Geologist in the state of Wyoming, received a Master of Science degree in Applied Geomorphology from the University of Utah in 1981. Since that time, he has performed multiple stream and river channel morphology studies as they relate to proposed hydroelectric projects and dams. His geographical area of expertise includes Utah, Idaho, Oregon, Washington, and Hawaii. Past work performed by Mr. Williams has included evaluations of the long-term morphological changes which occur to streams as a result of water development, including the development of designs to minimize the impacts of reduced flows resulting from diversion into penstocks and increased flows downstream from spillways and hydroelectric plant discharges.

Mr. Williams concluded from his site visit that Dugout Creek can currently be classified as a Type A4 stream (using the stream classification system of Rosgen, 1996). The "A" in the classification indicates that this stream type is generally entrenched and is characterized by a steep gradient (typically 4 to 10 percent) with a low width-to-depth ratio and low sinuosity. The "4" in the classification indicates that the channel material is generally composed of gravel, with lesser amounts of boulders, cobbles, sand, and fines. In its current form, the channel is very unstable and appears to be undergoing frequent change. Based on measurements collected by Mr. Williams in the existing truncated bend of the stream within the proposed disturbed area (i.e., that section of the stream which was largely abandoned when the upstream culvert blockage occurred), the natural stream at bankfull stage had a width of approximately 3 feet and a depth at the thalweg of approximately 1 foot within the disturbed area. This low-flow channel exists within a larger channel that has a width of approximately 8 to 12 feet at the top of the low-flow channel.

Mr. Williams concluded from his field observations that the high-energy system associated with Dugout Creek will require the establishment of a stable macro channel during reclamation to provide protection against mass wasting of the site by future runoff events. Within this macro channel, however, the formation of a micro channel should be encouraged through the establishment of selectively-placed "obstructions", such as boulders and logs which are anchored into the bank.

Mr. Williams cautioned that, due to the high energy associated with the Dugout Creek system, it would not be wise to physically construct a low-flow channel within the macro channel. To do so would likely be futile, since it would be essentially impossible to predetermine the morphological hydraulics of the micro system which would best fit the site. Hence, he recommended that the enhancement features be placed during reclamation, then allowing the stream to deposit sediment upstream from the obstructions. By this action, the stream would construct its own micro channel, with its associated "step-pool" system which is typical of Type A streams. If future runoff events cause variations within the micro system, Mr. Williams concluded that these changes will be in keeping with the morphological processes which are also typical of Type A streams. However, with the stability provided by the macro channel, the site should be protected, even if minor local changes occur within the reclaimed reaches of Dugout Creek.

APPENDIX 7-6

UPDES Permit Applications

Canyon Fuel Company, LLC
Dugout Canyon Mine
P.O. Box 1029
Wellington, Utah 84542
Phone: (435) 637-6360
Fax: (435) 636-2897

February 22, 2005

Jeff Studenka, Environmental Scientist
Permits & Compliance Section
Division of Water Quality
Utah Department of Environmental Quality
288 North 1460 West, PO Box 144870
Salt Lake City, UT 84114-4870

Re: New Discharge Point - Outfall 005, Dugout Canyon Mine, Permit UT0025593

Dear Mr. Studenka:

Canyon Fuel Co., LLC – Dugout Canyon Mine, is requesting a fifth discharge point to be approved under UPDES permit UT0025593. The discharge point will be located at the Pace Canyon Fan Portal breakout – Lat: 39d40'17.772" and Long: 110d30'29.051". This discharge point is planned for the discharge of mine waters and treated surface water in accordance with our approved UPDES permit. The outlet for both the surface water and mine water discharge is in close proximity of one another. Therefore, we are requesting a single discharge point. The quantity of mine water discharged at the Pace Canyon location should reduce the quantity of water normally discharged from the Dugout Canyon mine site outfall 001. The Pace Canyon discharge will be intermittent and will be monitored and reported as required by Dugout Canyon Mine's UPDES permit.

The location of the proposed discharge point is shown on Figure 1, attached. The mine anticipates discharge occurring at this site on or about July 01, 2005.

If you have any questions or require further information, please contact me at (435) 636-2873 or Dave Spillman at (435) 636-2872.

Sincerely,

Jared L. Sorensen
Mine Engineer

Enclosures

cc: Dave Spillman
Vicky Miller

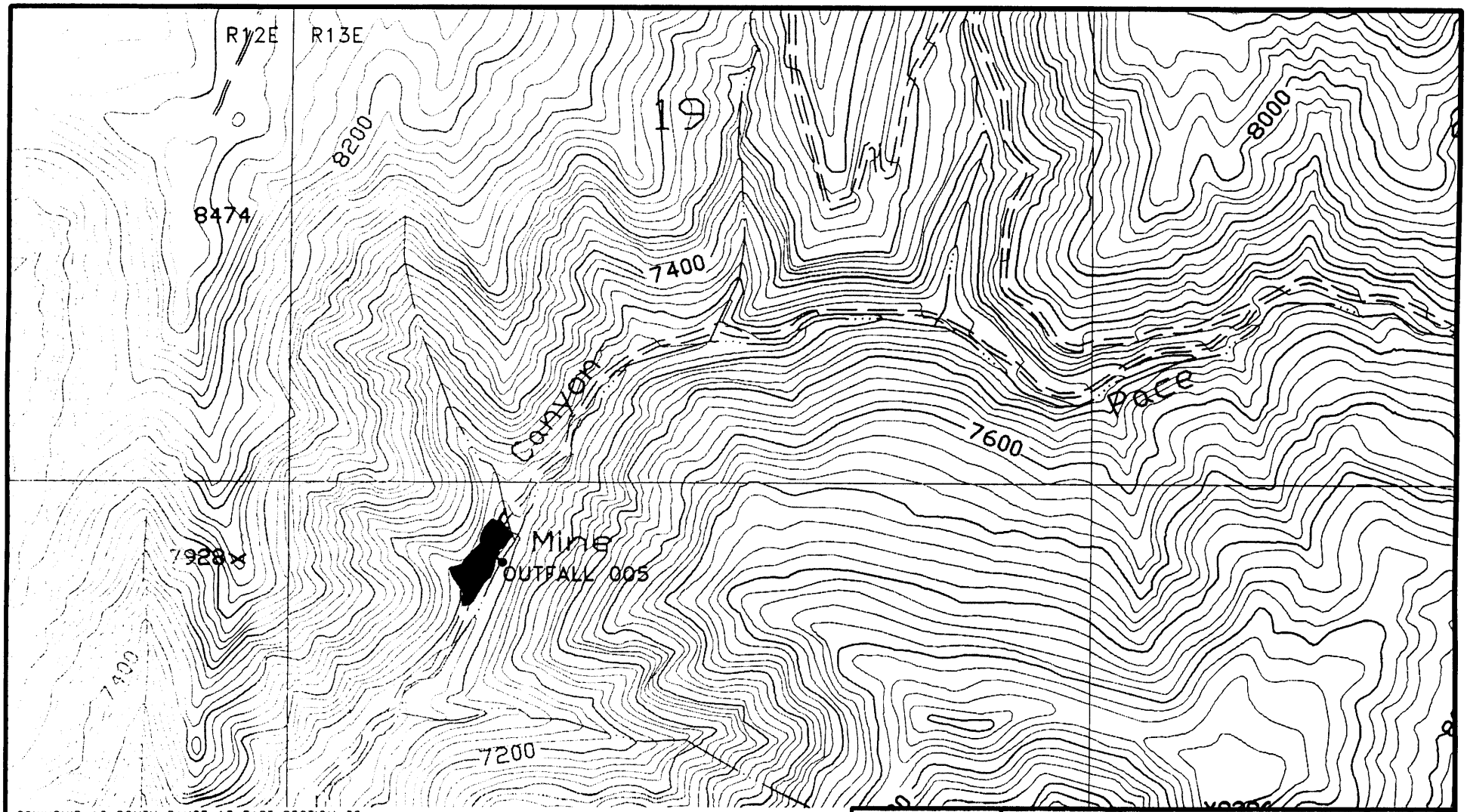

TOWNSHIP 13 SOUTH RANGE 13 EAST SECTION 30
LATITUDE: 39d40'17.772" LONGITUDE: 110d30'29.051"

REVISIONS OR UP-DATES				
NO.	DATE	BY	DATE: 02/23/05	
			DESIGNED BY:	
			DRAWN BY:	JKS
			CHECKED BY:	VSM
			SCALE: 1"=1000'	

FILENAME: X:\UPDES\DRAWINGS\FIGURE 1.DWG

Canyon Fuel Company, LLC
Dugout Canyon Mine

PACE CANYON FAN UPDES DISCHARGE POINT LOCATION

P.O BOX 1029
WELLINGTON, UTAH 84542

DRAWING OR MAP NUMBER
FIGURE 1

Permit No. UT0025593
Minor Industrial

STATE OF UTAH
DIVISION OF WATER QUALITY
DEPARTMENT OF ENVIRONMENTAL QUALITY
SALT LAKE CITY, UTAH

AUTHORIZATION TO DISCHARGE UNDER THE

UTAH POLLUTANT DISCHARGE ELIMINATION SYSTEM
(UPDES)

In compliance with provisions of the Utah *Water Quality Act, Title 19, Chapter 5, Utah Code Annotated ("UCA") 1953, as amended* (the *"Act"*),

CANYON FUEL COMPANY, LLC – DUGOUT CANYON MINE

is hereby authorized to discharge from its facility located near Wellington, Utah, with the outfall(s) located as indicated in this permit, to receiving waters named

Dugout Creek and an unnamed tributary of Grassy Trail Creek.

in accordance with discharge points, effluent limitations, monitoring requirements and other conditions set forth herein.

This permit shall become effective December 1, 2004.

This permit and the authorization to discharge shall expire at midnight, November 30, 2009

Signed this 30th day of November 2004.

Authorized Permitting Official
Executive Secretary
Utah Water Quality Board

I. EFFLUENT LIMITATIONS AND MONITORING REQUIREMENTS

A. Definitions.

1. The "30-day (and monthly) average" is the arithmetic average of all samples collected during a consecutive 30-day period or calendar month, whichever is applicable. The calendar month shall be used for purposes of reporting self-monitoring data on discharge monitoring report forms.

2. The "7-day (and weekly) average" is the arithmetic average of all samples collected during a consecutive 7-day period or calendar week, whichever is applicable. The 7-day and weekly averages are applicable only to those effluent characteristics for which there are 7-day average effluent limitations. The calendar week which begins on Sunday and ends on Saturday, shall be used for purposes of reporting self- monitoring data on discharge monitoring report forms. Weekly averages shall be calculated for all calendar weeks with Saturdays in the month. If a calendar week overlaps two months (i.e., the Sunday is in one month and the Saturday in the following month), the weekly average calculated for that calendar week shall be included in the data for the month that contains the Saturday.

3. "Daily Maximum" ("Daily Max.") is the maximum value allowable in any single sample or instantaneous measurement.

4. A "grab" sample, for monitoring requirements, is defined as a single "dip and take" sample collected at a representative point in the discharge stream.

5. An "instantaneous" measurement, for monitoring requirements, is defined as a single reading, observation, or measurement.

6. "Upset" means an exceptional incident in which there is unintentional and temporary noncompliance with technology-based permit effluent limitations because of factors beyond the reasonable control of the permittee. An upset does not include noncompliance to the extent caused by operational error, improperly designed treatment facilities, inadequate treatment facilities, lack of preventive maintenance, or careless or improper operation.

7. "Bypass" means the intentional diversion of waste streams from any portion of a treatment facility.

8. "Severe property damage" means substantial physical damage to property, damage to the treatment facilities which causes them to become inoperable, or substantial and permanent loss of natural resources which can reasonably be expected to occur in the absence of a bypass. Severe property damage does not mean economic loss caused by delays in production.

9. "Executive Secretary" means Executive Secretary of the Utah Water Quality

a. are listed at *40 CFR 372.65* pursuant to *Section 313* of *Title III* of the *Emergency Planning and Community Right-to-Know Act (EPCRA)* (also known as *Title III* of the *Superfund Amendments and Reauthorization Act (SARA)* of 1986);

b. are present at or above threshold levels at a facility subject to *EPCRA, Section 313* reporting requirements, and

c. meet at least one of the following criteria:

(1) are listed in *Appendix D* of *40 CFR 122* on either *Table II* (organic priority pollutants), *Table III* (certain metals, cyanides, and phenols) or *Table IV* (certain toxic pollutants and hazardous substances);

(2) are listed as a hazardous substance pursuant to *Section 311(b)(2)(A)* of the *CWA* at *40 CFR 116.4*; or

(3) are pollutants for which EPA has published acute or chronic toxicity criteria.

20. "Significant materials" includes, but is not limited to: raw materials; fuels; materials such as solvents, detergents, and plastic pellets; finished materials such as metallic products; raw materials used in food processing or production; hazardous substances designated under *Section 101(14)* of *CERCLA*; any chemical the facility is required to report pursuant to *EPCRA Section 313*; fertilizers; pesticides; and waste products such as ashes, slag and sludge that have the potential to be released with storm water discharges.

21. "Significant spills" includes, but is not limited to: releases of oil or hazardous substances in excess of reportable quantities under *Section 311* of the *Clean Water Act* (see *40 CFR 110.10* and *40 CFR 117.21*) or *Section 102* of *CERCLA* (see *40 CFR 302.4*).

22. "Storm water" means storm water runoff, snow melt runoff, and surface runoff and drainage.

23. "Waste pile" means any noncontainerized accumulation of solid, nonflowing waste that is used for treatment or storage.

24. "10-year, 24-hour precipitation event" means the maximum 24-hour precipitation event with a probable reoccurrence interval of once in 10 years. This information is available in *Weather Bureau Technical Paper No. 40*, May 1961 and *NOAA Atlas 2*, 1973 for the 11 Western States, and may be obtained from the National Climatic Center of the Environmental Data Service, National Oceanic and Atmospheric Administration, U.S. Department of Commerce.

Effluent Characteristics	Discharge Limitations a/ Average 30-Day	7-Day	Daily Maximum	Monitoring Requirements Measurement Frequency	Sample Type
Flow, mgd	NA	NA	NA	2 X Monthly	Instantaneous
Total Iron, mg/L	NA	NA	1.1	2 X Monthly	Grab
Oil & Grease, mg/L	NA	NA	10	2 X Monthly	Visual/Grab b/
Total Suspended Solids, mg/L	25	35	70	2 X Monthly	Grab
Total Dissolved Solids, mg/L c/	500	NA	2400	2 X Monthly	Grab
Total Dissolved Solids, tons/day c/	NA	NA	1.0	2 X Monthly	Grab

The pH shall not be less than 6.5 standard units (S.U.) nor greater than 9.0 S.U. in any sample and shall be monitored by a grab sample.

There shall be no visible sheen or floating solids or visible foam in other than trace amounts.

There shall be no discharge of sanitary wastes.

N.A. - Not Applicable.

a/ See Definitions, *Part I.A* for definition of terms.

b/ Oil and grease shall be a visual test. If any oil and grease sheens are observed visually, then a sample of the effluent must be taken and this sample shall not exceed 10 mg/L.

c/ The TDS concentration from each of the outfalls shall not exceed 2400 mg/L as a daily maximum limit. No tons per day loading limit will be applied if the concentration of TDS in the discharge is equal to or less than 500 mg/L as a thirty-day average. However, if the 30-day average concentration exceeds 500 mg/L, then the permittee cannot discharge more than 1.0 ton per day as a sum from all discharge points. Upon determination by the Executive Secretary that the permittee is not able to meet the 500 mg/L 30-day average or the 1.0 ton per day loading limit, the permittee is required to participate in and/or fund a salinity offset project to include TDS offset credits, within six (6) months of the effective date of this permit.

The salinity offset project shall include TDS credits on a ton-for-ton basis for which the permittee is over the 1.0 ton per day loading limit. The tonnage reduction from the offset project must be calculated by a method similar to one used by the NRCS, Colorado River Basin Salinity Control Forum, or other applicable agency.

I.D.3 and 4. The alternate limitations in Parts I.D.3 and 4 shall not apply to treatment systems that treat underground mine water only.

E. Storm Water Requirements. . It has been determined that Dugout Mine has a regulated storm water discharge as per UAC R317-8-3.9., therefore, the following permit conditions governing storm water discharges apply.

1. Coverage of This Section.

a. Discharges Covered Under This Section. The requirements listed under this section shall apply to storm water discharges from Dugout Mine, subject to effluent limitations listed in Part I.D. of this permit.

1) Site Coverage. Storm water discharges from the following portions of Dugout may be eligible for this permit: haul roads (nonpublic roads on which coal or coal refuse is conveyed), access roads (nonpublic roads providing light vehicular traffic within the facility property and to public roadways), railroad spurs, sidings, and internal haulage lines (rail lines used for hauling coal within the facility property and to offsite commercial railroad lines or loading areas), conveyor belts, chutes, and aerial tramway haulage areas (areas under and around coal or refuse conveyor areas, including transfer stations), equipment storage and maintenance yards, coal handling buildings and structures, and inactive coal mines and related areas (abandoned and other inactive mines, refuse disposal sites and other mining-related areas on private lands).

2. Prohibition of Non-storm Water Discharges.

a. The following non-storm water discharges may be authorized by this permit provided the non-storm water component of the discharge is in compliance with this section; fire fighting activities; fire hydrant flushings; potable water sources including waterline flushings; drinking fountain water; irrigation drainage, lawn watering; routine external building washdown water where detergents or other compounds have not been used in the process; pavement washwaters where spills or leaks of toxic or hazardous materials (including oils and fuels) have not occurred (unless all spilled material has been removed) and where detergents are not used; air conditioning condensate; uncontaminated compressor condensate; uncontaminated springs; uncontaminated ground water; and foundation or footing drains where flows are not contaminated with process materials such as solvents.

3. Storm Water Pollution Prevention Plan Requirements. Most of the active coal mining-related areas, described in paragraph 1. above, are subject to sediment and erosion control regulations of the U.S. Office of Surface Mining (OSM) that enforces the Surface Mining Control and Reclamation Act (SMCRA). OSM has

c) Drainage.

(1) A site map, such as a drainage map required for SMCRA permit applications, that indicate drainage areas and storm water outfalls. These shall include but not be limited to the following:

(a) Drainage direction and discharge points from all applicable mining-related areas described in paragraph 1.a(1). (Site Coverage) above, including culvert and sump discharges from roads and rail beds and also from equipment and maintenance areas subject to storm runoff of fuel, lubricants and other potentially harmful liquids.

(b) Location of each existing erosion and sedimentation control structure or other control measures for reducing pollutants in storm water runoff.

(c) Receiving streams or other surface water bodies.

(d) Locations exposed to precipitation that contain acidic spoil, refuse or unreclaimed disturbed areas.

(e) Locations where major spills or leaks of toxic or hazardous pollutants have occurred.

(f) Locations where liquid storage tanks containing potential pollutants, such as caustics, hydraulic fluids and lubricants, are exposed to precipitation.

(g) Locations where fueling stations, vehicle and equipment maintenance areas are exposed to precipitation.

(h) Locations of outfalls and the types of discharges contained in the drainage areas of the outfalls.

(2) For each area of the facility that generates storm

potential pollutants shall be identified where known.

3) Measures and Controls. Dugout Mine shall develop a description of storm water management controls appropriate for the facility and implement such controls. The appropriateness and priorities of controls in a plan shall reflect identified potential sources of pollutants at Dugout Mine. The description of storm water management controls shall address the following minimum components, including a schedule for implementing such controls.

a) Good Housekeeping. Good housekeeping requires the maintenance of areas that may contribute pollutants to storm water discharges in a clean, orderly manner. These are practices that would minimize the generation of pollutants at the source or before it would be necessary to employ sediment ponds or other control measures at the discharge outlets. Where applicable, such measures or other equivalent measures would include the following: sweepers and covered storage to minimize dust generation and storm runoff; conservation of vegetation where possible to minimize erosion; watering of haul roads to minimize dust generation; collection, removal, and proper disposal of waste oils and other fluids resulting from vehicle and equipment maintenance; or other equivalent measures.

b) Preventive Maintenance. A preventive maintenance program shall involve timely inspection and maintenance of storm water management devices as well as inspecting and testing facility equipment and systems to uncover conditions that could cause breakdowns or failures resulting in discharges of pollutants to surface waters, and ensuring appropriate maintenance of such equipment and systems. Where applicable, such measures would include the following: removal and proper disposal of settled solids in catch basins to allow sufficient retention capacity; periodic replacement of siltation control measures subject to deterioration such as straw bales; inspections of storage tanks and pressure lines for fuels, lubricants, hydraulic fluid or slurry to prevent leaks due to deterioration or faulty connections; or other equivalent measures.

c) Spill Prevention and Response Procedures. Areas where potential spills that can contribute pollutants to storm water discharges can occur, and their accompanying drainage points shall be identified clearly in the storm

identified in the storm water pollution prevention plan or otherwise responsible for storm water management at all levels of responsibility of the components and goals of the storm water pollution prevention plan. Training should address topics such as spill response, good housekeeping and material management practices. The pollution prevention plan shall identify periodic dates for such training.

f) Record keeping and Internal Reporting Procedures. A description of incidents (such as spills, or other discharges) along with other information describing the quality and quantity of storm water discharges shall be included in the plan required under this part. Inspections and maintenance activities shall be documented and records of such activities shall be incorporated into the plan.

g) Non-storm Water Discharges.

(1) Certification. The plan shall include a certification that the discharge has been tested or evaluated for the presence of non-storm water discharges such as drainage from underground portions of inactive mines or floor drains from maintenance or coal handling buildings. The certification shall include the identification of potential significant sources of non-storm water discharges at the site, a description of the results of any test and/or evaluation, a description of the evaluation criteria or testing method used, the date of any testing and/or evaluation, and the onsite drainage points that were directly observed during the test. Certifications shall be signed in accordance with Part IV.G.4. of this permit.

(2) Exceptions. Except for flows from fire fighting activities, authorized sources of non-storm water listed in Part I.E.2.a. that are combined with storm water discharges associated with industrial activity must be identified in the plan. The plan shall identify and ensure the implementation of appropriate pollution prevention measures for the non-storm water component(s) of the discharge.

(3) Failure to Certify. If Dugout Mine is unable to provide the certification required (testing or other evaluation for non-storm water discharges), the

physical/chemical treatment of storm water.

i) Management of Flow. The plan shall contain a narrative consideration of the appropriateness of traditional storm water management practices (other than those as sediment and erosion control measures listed above) used to manage storm water runoff in a manner that reduces pollutants in storm water runoff from the site. The plan shall provide that the measures, which the permittee determines to be reasonable and appropriate, shall be implemented and maintained. Appropriate measures may include: discharge diversions; drainage/storm water conveyances; runoff dispersion; sediment control and collection; vegetation/soil stabilization; capping of contaminated sources; treatment; or other equivalent measures.

4) Comprehensive Site Compliance Evaluation. Qualified personnel shall conduct site compliance evaluations at intervals specified in the plan, but in no case less than once a year. Such evaluations shall provide:

a) Areas contributing to a storm water discharge associated with coal mining-related areas shall be visually inspected for evidence of, or the potential for, pollutants entering the drainage system. These areas include haul and access roads; railroad spurs, sidings, and internal haulage lines; conveyor belts, chutes and aerial tramways; equipment storage and maintenance yards; coal handling buildings and structures; and inactive mines and related areas. Measures to reduce pollutant loadings shall be evaluated to determine whether they are adequate and properly implemented in accordance with the terms of the permit or whether additional control measures are needed. Structural storm water management measures, sediment and erosion control measures, and other structural pollution prevention measures, as indicated in paragraphs 3.a.(3)(h) and 3.a.(3)(i) above and where identified in the plan, shall be observed to ensure that they are operating correctly. A visual evaluation of any equipment needed to implement the plan, such as spill response equipment, shall be made.

b) Based on the results of the evaluation, the description of potential pollutant sources identified in the plan, in accordance with paragraph 3.a.(2) of this section, and pollution prevention measures and controls identified in the plan, in accordance with paragraph 3.a.(3) of this

duration between the storm event sampled and the end of the previous measurable (greater than 0.1 inch rainfall) storm event; and an estimate of the total volume (in gallons) of the discharge sampled.

The results of benchmark monitoring are primarily for Dugout Mine's use to determine the overall effectiveness of the SWPPP in controlling the discharge of pollutants to receiving waters. Benchmark values are not viewed as permit limitations. An exceedance of a benchmark value does not, in and of itself, constitute a violation of this permit. While exceedance of a benchmark value does not automatically indicate a violation of a water quality standard has occurred, it does signal that modifications to the SWPPP or more specific pollution prevention controls may be necessary.

Table E.
Monitoring Requirements for Coal Mining Facilities

Pollutants of Concern	Cut-Off Concentration
Total Recoverable Aluminum	0.75 mg/L
Total Recoverable Iron	1.0 mg/L
Total Suspended Solids	100 mg/L

1) Monitoring Periods. Dugout Mine shall monitor samples collected during the sampling periods of: January through March, April through June, July through September, and October through December during the second and fourth years of this permit cycle.

2) Sample Type. A minimum of one grab sample shall be taken. All such samples shall be collected from the discharge resulting from a storm event that is greater than 0.1 inches in magnitude and that occurs at least 72 hours from the previously measurable (greater than 0.1 inch rainfall) storm event. The required 72-hour storm event interval is waived where the preceding measurable storm event did not result in a measurable discharge from the facility. The required 72-hour storm event interval may also be waived where Dugout Mine documents that less than a 72-hour interval is representative for local storm events during the season when sampling is being conducted. The grab sample shall be taken during the first 30 minutes of the discharge. If the collection of a grab sample during the first 30 minutes is impracticable, a grab sample can be taken during the first hour of the discharge, and the discharger shall submit with the monitoring report a description of why a grab sample during the first 30 minutes was impracticable. If storm water discharges associated with industrial activity commingle with process or nonprocess water, then where practicable permittees must attempt to sample the storm water discharge before it mixes with the non-storm water discharge.

substantially identical outfall(s) provided that Dugout Mine includes in the storm water pollution prevention plan a description of the location of the outfalls and explains in detail why the outfalls are expected to discharge substantially identical effluents. In addition, for each outfall that Dugout Mine believes is representative, an estimate of the size of the drainage area (in square feet) and an estimate of the runoff coefficient of the drainage area [e.g., low (under 40 percent), medium (40 to 65 percent), or high (above 65 percent)] shall be provided in the plan. Dugout Mine shall include the description of the location of the outfalls, explanation of why outfalls are expected to discharge substantially identical effluents, and estimate of the size of the drainage area and runoff coefficient with the SWDMR.

5) Alternative Certification. Dugout Mine is not subject to the monitoring requirements of this section provided that certification is made for a given outfall or on a pollutant-by-pollutant basis in lieu of monitoring reports required under paragraph b. below, under penalty of law, signed in accordance with Part IV.G.4. (Signatory Requirements). The Certification shall state that material handling equipment or activities, raw materials, intermediate products, final products, waste materials, by-products, industrial machinery or operations, or significant materials from past industrial activity that are located in areas of the facility within the drainage area of the outfall are not presently exposed to storm water and are not expected to be exposed to storm water for the certification period. Such certification must be retained in the storm water pollution prevention plan, and submitted to DWQ in accordance with Part II.D. of this permit. In the case of certifying that a pollutant is not present, Dugout Mine must submit the certification along with the monitoring reports required under paragraph b. below. If Dugout Miner cannot certify for an entire period, they must submit the date exposure was eliminated and any monitoring required up until that date. This certification option is not applicable to compliance monitoring requirements associated with effluent limitations.

b. Reporting. Dugout Mine shall submit monitoring results for each outfall associated with industrial activity [or a certification in accordance with Sections (3), (4), or (5) above] obtained during the second year reporting period, on Storm Water Discharge Monitoring Report (SWDMR) form(s) postmarked no later than the 31st day of the following March. Monitoring results [or a certification in accordance with Sections (3), (4), or (5) above] obtained during the fourth year reporting period shall be submitted on SWDMR form(s) postmarked no later than the 31st day of the following March. For each outfall, one signed SWDMR form must be submitted to the Executive Secretary per storm event sampled. Signed

II. MONITORING, RECORDING AND REPORTING REQUIREMENTS

A. Representative Sampling Samples taken in compliance with the monitoring requirements established under *Part I* shall be collected from the effluent stream prior to discharge into the receiving waters. Samples and measurements shall be representative of the volume and nature of the monitored discharge. Sludge samples shall be collected at a location representative of the quality of sludge immediately prior to the use-disposal practice.

B. Monitoring Procedures. Monitoring must be conducted according to test procedures approved under *Utah Administrative Code ("UAC") R317-2-10*, unless other test procedures have been specified in this permit.

C. Penalties for Tampering. The *Act* provides that any person who falsifies, tampers with, or knowingly renders inaccurate, any monitoring device or method required to be maintained under this permit shall, upon conviction, be punished by a fine of not more than $10,000 per violation, or by imprisonment for not more than six months per violation, or by both.

D. Reporting of Monitoring Results. Monitoring results obtained during the previous month shall be summarized for each month and reported on a Discharge Monitoring Report Form (EPA No. 3320-1), post-marked no later than the 28th day of the month following the completed reporting period. The first report is due on December 28, 2004. If no discharge occurs during the reporting period, "no discharge" shall be reported. Legible copies of these, and all other reports including whole effluent toxicity (WET) test reports required herein, shall be signed and certified in accordance with the requirements of *Signatory Requirements (see Part IV.G)*, and submitted to the Director, Division of Water Quality at the following address:

original to: Department of Environmental Quality
Division of Water Quality
288 North 1460 West
PO Box 144870
Salt Lake City, Utah 84114-4870

E. Compliance Schedules. Reports of compliance or noncompliance with, or any progress reports on, interim and final requirements contained in any Compliance Schedule of this permit shall be submitted no later than 14 days following each schedule date.

F. Additional Monitoring by the Permittee. If the permittee monitors any parameter more frequently than required by this permit, using test procedures approved under *UAC R317-2-10* or as otherwise specified in this permit, the results of this monitoring shall be included in the calculation and reporting of the data submitted in the DMR. Such increased frequency shall also be indicated. Only those parameters required by the permit need to be reported.

c. The estimated time noncompliance is expected to continue if it has not been corrected; and,

d. Steps taken or planned to reduce, eliminate, and prevent reoccurrence of the noncompliance.

e. Steps taken, if any, to mitigate the adverse impacts on the environment and human health during the noncompliance period.

4. The Executive Secretary may waive the written report on a case-by-case basis if the oral report has been received within 24 hours by the Division of Water Quality, (801) 538-6146.

5. Reports shall be submitted to the addresses in *Part II.D, Reporting of Monitoring Results.*

J. Other Noncompliance Reporting. Instances of noncompliance not required to be reported within 24 hours shall be reported at the time that monitoring reports for *Part II.D* are submitted. The reports shall contain the information listed in *Part II.I.3.*

K. Inspection and Entry. The permittee shall allow the Executive Secretary, or an authorized representative, upon the presentation of credentials and other documents as may be required by law, to:

1. Enter upon the permittee's premises where a regulated facility or activity is located or conducted, or where records must be kept under the conditions of the permit;

2. Have access to and copy, at reasonable times, any records that must be kept under the conditions of this permit;

3. Inspect at reasonable times any facilities, equipment (including monitoring and control equipment), practices, or operations regulated or required under this permit; and,

4. Sample or monitor at reasonable times, for the purpose of assuring permit compliance or as otherwise authorized by the *Act*, any substances or parameters at any location.

These bypasses are not subject to 2. and 3. of this section.

2. Prohibition of Bypass.

a. Bypass is prohibited, and the Executive Secretary may taken enforcement action against a permittee for bypass, unless:

(1) Bypass was unavoidable to prevent loss of human life, personal injury, or severe property damage;

(2) There were no feasible alternatives to bypass, such as the use of auxiliary treatment facilities, retention of untreated wastes, or maintenance during normal periods of equipment downtime. This condition is not satisfied if adequate backup equipment should have been installed in the exercise of reasonable engineering judgement to prevent a bypass which occurred during normal periods of equipment downtime or preventive maintenance, and

(3) The permittee submitted notices as required under section G.3.

b. The executive Secretary may approve an anticipated bypass, after considering its adverse effects, if the Executive Secretary determines that it will meet the three conditions listed in sections G.2a. (1), (2) and (3).

3. Notice.

a. Anticipated bypass. Except as provided above in section G.2. and below in section G. 3.b, if the permittee knows in advance of the need for a bypass, it shall submit prior notice, at least ninety days before the date of bypass. The prior notice shall include the following unless otherwise waived by the Executive Secretary:

(1) Evaluation of alternative to bypass, including cost-benefit analysis containing an assessment of anticipated resource damages:

(2) A specific bypass plan describing the work to be performed including scheduled dates and times. The permittee must notify the Executive Secretary in advance of any changes to the bypass schedule;

(3) Description of specific measures to be taken to minimize environmental and public health impacts;

(4) A notification plan sufficient to alert all downstream users, the public and others reasonably expected to be impacted by the bypass;

3. Burden of proof. In any enforcement proceeding, the permittee seeking to establish the occurrence of an upset has the burden of proof.

I. Toxic Pollutants. The permittee shall comply with effluent standards or prohibitions established under Section 307(a) of *The Water Quality Act of 1987* for toxic pollutants within the time provided in the regulations that establish those standards or prohibitions, even if the permit has not yet been modified to incorporate the requirement.

J. Changes in Discharge of Toxic Substances. Notification shall be provided to the Executive Secretary as soon as the permittee knows of, or has reason to believe:

1. That any activity has occurred or will occur which would result in the discharge, on a routine or frequent basis, of any toxic pollutant which is not limited in the permit, if that discharge will exceed the highest of the following "notification levels":

   a. One hundred micrograms per liter (100 ug/L);

   b. Two hundred micrograms per liter (200 ug/L) for acrolein and acrylonitrile; five hundred micrograms per liter (500 ug/L) for 2,4-dinitrophenol and for 2-methyl-4, 6-dinitrophenol; and one milligram per liter (1 mg/L) for antimony;

   c. Five (5) times the maximum concentration value reported for that pollutant in the permit application in accordance with *UAC R317-8-3.4(7)* or (10); or,

   d. The level established by the Executive Secretary in accordance with *UAC R317-8-4.2(6)*.

2. That any activity has occurred or will occur which would result in any discharge, on a non-routine or infrequent basis, of a toxic pollutant which is not limited in the permit, if that discharge will exceed the highest of the following "notification levels":

   a. Five hundred micrograms per liter (500 ug/L);

   b. One milligram per liter (1 mg/L) for antimony:

   c. Ten (10) times the maximum concentration value reported for that pollutant in the permit application in accordance with *UAC R317-8-3.4(9)*; or,

   d. The level established by the Executive Secretary in accordance with *UAC R317-8-4.2(6)*.

K. Industrial Pretreatment. Any wastewaters discharged to the sanitary sewer, either as a direct discharge or as a hauled waste, are subject to Federal, State and local pretreatment regulations. Pursuant to Section 307 of *The Water Quality Act of*

IV. GENERAL REQUIREMENTS

A. Planned Changes. The permittee shall give notice to the Executive Secretary as soon as possible of any planned physical alterations or additions to the permitted facility. Notice is required only when the alteration or addition could significantly change the nature or increase the quantity of pollutants discharged. This notification applies to pollutants which are not subject to effluent limitations in the permit. In addition, if there are any planned substantial changes to the permittee's existing sludge facilities or their manner of operation or to current sludge management practices of storage and disposal, the permittee shall give notice to the Executive Secretary of any planned changes at least 30 days prior to their implementation.

B. Anticipated Noncompliance. The permittee shall give advance notice to the Executive Secretary of any planned changes in the permitted facility or activity which may result in noncompliance with permit requirements.

C. Permit Actions. This permit may be modified, revoked and reissued, or terminated for cause. The filing of a request by the permittee for a permit modification, revocation and reissuance, or termination, or a notification of planned changes or anticipated noncompliance, does not stay any permit condition.

D. Duty to Reapply. If the permittee wishes to continue an activity regulated by this permit after the expiration date of this permit, the permittee shall apply for and obtain a new permit. The application shall be submitted at least 180 days before the expiration date of this permit.

E. Duty to Provide Information. The permittee shall furnish to the Executive Secretary, within a reasonable time, any information which the Executive Secretary may request to determine whether cause exists for modifying, revoking and reissuing, or terminating this permit, or to determine compliance with this permit. The permittee shall also furnish to the Executive Secretary, upon request, copies of records required to be kept by this permit.

F. Other Information. When the permittee becomes aware that it failed to submit any relevant facts in a permit application, or submitted incorrect information in a permit application or any report to the Executive Secretary, it shall promptly submit such facts or information.

G. Signatory Requirements. All applications, reports or information submitted to the Executive Secretary shall be signed and certified.

1. All permit applications shall be signed by either a principal executive officer or ranking elected official

2. All reports required by the permit and other information requested by the Executive Secretary shall be signed by a person described above or by a duly authorized representative of that person. A person is a duly authorized representative only if:

invasion of personal rights, nor any infringement of federal, state or local laws or regulations.

L. Severability. The provisions of this permit are severable, and if any provisions of this permit, or the application of any provision of this permit to any circumstance, is held invalid, the application of such provision to other circumstances, and the remainder of this permit, shall not be affected thereby.

M. Transfers. This permit may be automatically transferred to a new permittee if:

1. The current permittee notifies the Executive Secretary at least 20 days in advance of the proposed transfer date;

2. The notice includes a written agreement between the existing and new permittees containing a specific date for transfer of permit responsibility, coverage, and liability between them; and,

3. The Executive Secretary does not notify the existing permittee and the proposed new permittee of his or her intent to modify, or revoke and reissue the permit. If this notice is not received, the transfer is effective on the date specified in the agreement mentioned in paragraph 2 above.

N. State Laws. Nothing in this permit shall be construed to preclude the institution of any legal action or relieve the permittee from any responsibilities, liabilities, or penalties established pursuant to any applicable state law or regulation under authority preserved by *UCA 19-5-117.*

O. Water Quality-Reopener Provision. This permit may be reopened and modified (following proper administrative procedures) to include the appropriate effluent limitations and compliance schedule, if necessary, if one or more of the following events occurs:

1. Water Quality Standards for the receiving water(s) to which the permittee discharges are modified in such a manner as to require different effluent limits than contained in this permit.

2. A final wasteload allocation is developed and approved by the State and/or EPA for incorporation in this permit.

3. A revision to the current Water Quality Management Plan is approved and adopted which calls for different effluent limitations than contained in this permit.

P. Toxicity Limitation-Reopener Provision. This permit may be reopened and modified (following proper administrative procedures) to include whole effluent toxicity (WET) testing, a WET limitation, a compliance schedule, a compliance date, additional or modified numerical limitations, or any other conditions related to the control of toxicants if toxicity is detected during the life of this permit.

APPENDIX 7-7

Surface-Water Monitoring Data

ADD TO THE BACK OF EXISTING INFORMATION

"FAN" Monitoring Data 2003 - 2004

Date	Time	pH	Cond.	Temp.	DO	Flow (gpm)	Comments
11/21/03	1615					NOF	Dry
3/29/04	1020					NOF	Frozen
6/16/04	1130	9.49	1010	14	6.5	20	
8/17/04	830	8.64	744	11	4.5	20	
10/12/04	1300	8.62	1008	7	5	14	

ACZ Laboratories, Inc.

2773 Downhill Drive Steamboat Springs, CO 80487(800) 334-5493

Inorganic Analytical Results

Soldier Creek Coal Company
Project ID:
Sample ID: FAN

ACZ Sample ID: ***L46311-03***
Date Sampled: *06/16/04 11:30*
Date Received: *06/21/04*
Sample Matrix: *Surface Water*

Metals Analysis

Parameter	EPA Method	Result	Qual	XQ	Units	MDL	PQL	Date	Analyst
Calcium, dissolved	M200.7 ICP	52.7			mg/L	0.2	1	06/21/04 21:05	wfg
Iron, dissolved	M200.7 ICP	0.03	B		mg/L	0.01	0.05	06/21/04 21:05	wfg
Iron, total	M200.7 ICP	0.68			mg/L	0.01	0.05	06/26/04 10:11	scp
Magnesium, dissolved	M200.7 ICP	68.2			mg/L	0.2	1	06/21/04 21:05	wfg
Manganese, dissolved	M200.7 ICP		U		mg/L	0.005	0.03	06/21/04 21:05	wfg
Manganese, total	M200.7 ICP	0.014	B		mg/L	0.005	0.03	06/24/04 21:32	scp
Potassium, dissolved	M200.7 ICP	3.4			mg/L	0.3	1	06/21/04 21:05	wfg
Sodium, dissolved	M200.7 ICP	54.6			mg/L	0.3	1	06/21/04 21:05	wfg

Metals Prep

Parameter	EPA Method	Result	Qual	XQ	Units	MDL	PQL	Date	Analyst
Total Hot Plate Digestion	M200.2 ICP							06/24/04 9:40	scp

Wet Chemistry

Parameter	EPA Method	Result	Qual	XQ	Units	MDL	PQL	Date	Analyst
Alkalinity as CaCO3	SM2320B - Titration								
Bicarbonate as CaCO3		334			mg/L	2	10	06/22/04 0:00	mah
Carbonate as CaCO3			U		mg/L	2	10	06/22/04 0:00	mah
Hydroxide as CaCO3			U		mg/L	2	10	06/22/04 0:00	mah
Total Alkalinity		334			mg/L	2	10	06/22/04 0:00	mah
Cation-Anion Balance	Calculation								
Cation-Anion Balance		-2.7			%			07/08/04 0:00	calc
Sum of Anions		11.3			meq/L	0.1	0.5	07/08/04 0:00	calc
Sum of Cations		10.7			meq/L	0.1	0.5	07/08/04 0:00	calc
Chloride	M325.2 - Colorimetric	8			mg/L	1	5	07/02/04 20:03	kmc
Lab Filtration	SM 3030 B							06/22/04 8:06	las
Oil & Grease, Total Recoverable	M1664 - Gravimetric		U	*	mg/L	2	10	06/30/04 4:48	mah
Residue, Filterable (TDS) @180C	M160.1 - Gravimetric	590			mg/L	10	20	06/23/04 17:23	bf
Residue, Non-Filterable (TSS) @105C	M160.2 - Gravimetric	32			mg/L	5	20	06/22/04 14:21	mah
Sulfate	M375.3 - Gravimetric	210			mg/L	10	50	06/28/04 9:19	djb
TDS (calculated)	Calculation	597			mg/L	10	50	07/08/04 0:00	calc
TDS (ratio - measured/calculated)	Calculation	0.99						07/08/04 0:00	calc

** Please refer to Extended Qualifier Report for detail.*

ACZ Laboratories, Inc.

2773 Downhill Drive Steamboat Springs, CO 80487(800) 334-5493

Inorganic Analytical Results

Soldier Creek Coal Company
Project ID:
Sample ID: FAN

ACZ Sample ID: ***L47295-06***
Date Sampled: *08/17/04 08:30*
Date Received: *08/19/04*
Sample Matrix: *Surface Water*

Metals Analysis

Parameter	EPA Method	Result	Qual	XQ	Units	MDL	PQL	Date	Analyst
Calcium, dissolved	M200.7 ICP	64.1			mg/L	0.2	1	08/25/04 2:01	wfg
Iron, dissolved	M200.7 ICP		U		mg/L	0.01	0.05	08/24/04 5:34	wfg
Iron, total	M200.7 ICP	3.40		*	mg/L	0.01	0.05	09/01/04 10:45	wfg
Magnesium, dissolved	M200.7 ICP	50.2			mg/L	0.2	1	08/25/04 2:01	wfg
Manganese, dissolved	M200.7 ICP	0.016	B		mg/L	0.005	0.03	08/25/04 2:01	wfg
Manganese, total	M200.7 ICP	0.079			mg/L	0.005	0.03	09/01/04 10:45	wfg
Potassium, dissolved	M200.7 ICP	4.5			mg/L	0.3	1	08/24/04 5:34	wfg
Sodium, dissolved	M200.7 ICP	42.8			mg/L	0.3	1	08/24/04 5:34	wfg

Metals Prep

Parameter	EPA Method	Result	Qual	XQ	Units	MDL	PQL	Date	Analyst
Total Hot Plate Digestion	M200.2 ICP							08/31/04 7:51	wfg

Wet Chemistry

Parameter	EPA Method	Result	Qual	XQ	Units	MDL	PQL	Date	Analyst
Alkalinity as CaCO3	SM2320B - Titration								
Bicarbonate as CaCO3		279			mg/L	2	10	08/30/04 0:00	mah
Carbonate as CaCO3			U		mg/L	2	10	08/30/04 0:00	mah
Hydroxide as CaCO3			U		mg/L	2	10	08/30/04 0:00	mah
Total Alkalinity		279			mg/L	2	10	08/30/04 0:00	mah
Cation-Anion Balance	Calculation								
Cation-Anion Balance		1.1			%			09/10/04 0:00	calc
Sum of Anions		9.1			meq/L	0.1	0.5	09/10/04 0:00	calc
Sum of Cations		9.3			meq/L	0.1	0.5	09/10/04 0:00	calc
Chloride	M325.2 - Colorimetric	6		*	mg/L	1	5	08/26/04 21:20	jjr
Lab Filtration	SM 3030 B							08/24/04 11:24	ak
Oil & Grease, Total Recoverable	M1664 - Gravimetric		U		mg/L	2	10	08/28/04 9:25	mah
Residue, Filterable (TDS) @180C	M160.1 - Gravimetric	490	H	*	mg/L	10	20	08/30/04 12:40	jah
Residue, Non-Filterable (TSS) @105C	M160.2 - Gravimetric	78			mg/L	5	20	08/24/04 18:26	ct
Sulfate	M375.3 - Gravimetric	160			mg/L	10	50	09/02/04 8:26	jah
TDS (calculated)	Calculation	495			mg/L	10	50	09/10/04 0:00	calc
TDS (ratio - measured/calculated)	Calculation	0.99						09/10/04 0:00	calc

** Please refer to Extended Qualifier Report for detail.*

ACZ Laboratories, Inc.

2773 Downhill Drive Steamboat Springs, CO 80487(800) 334-5493

Inorganic Analytical Results

Soldier Creek Coal Company
Project ID:
Sample ID: FAN

ACZ Sample ID: ***L48311-01***
Date Sampled: *10/12/04 13:00*
Date Received: *10/15/04*
Sample Matrix: *Surface Water*

Metals Analysis

Parameter	EPA Method	Result	Qual	XQ	Units	MDL	PQL	Date	Analyst
Calcium, dissolved	M200.7 ICP	75.7			mg/L	0.2	1	10/28/04 21:09	wfg/ak
Iron, dissolved	M200.7 ICP	0.03	B		mg/L	0.01	0.05	10/28/04 21:09	wfg/ak
Iron, total	M200.7 ICP	0.12			mg/L	0.01	0.05	10/28/04 21:04	wfg
Magnesium, dissolved	M200.7 ICP	69.3			mg/L	0.2	1	10/28/04 21:09	wfg/ak
Manganese, dissolved	M200.7 ICP	0.078			mg/L	0.005	0.03	10/28/04 21:09	wfg/ak
Manganese, total	M200.7 ICP	0.082			mg/L	0.005	0.03	10/28/04 21:04	wfg
Potassium, dissolved	M200.7 ICP	4.1			mg/L	0.3	1	10/28/04 21:09	wfg/ak
Sodium, dissolved	M200.7 ICP	52.1			mg/L	0.3	1	10/28/04 21:09	wfg/ak

Metals Prep

Parameter	EPA Method	Result	Qual	XQ	Units	MDL	PQL	Date	Analyst
Total Hot Plate Digestion	M200.2 ICP							10/25/04 14:33	ak

Wet Chemistry

Parameter	EPA Method	Result	Qual	XQ	Units	MDL	PQL	Date	Analyst
Alkalinity as CaCO3	SM2320B - Titration								
Bicarbonate as CaCO3		353			mg/L	2	10	10/26/04 0:00	mah
Carbonate as CaCO3		13			mg/L	2	10	10/26/04 0:00	mah
Hydroxide as CaCO3			U		mg/L	2	10	10/26/04 0:00	mah
Total Alkalinity		366			mg/L	2	10	10/26/04 0:00	mah
Cation-Anion Balance	Calculation								
Cation-Anion Balance		-0.4			%			11/09/04 0:00	calc
Sum of Anions		12.0			meq/L	0.1	0.5	11/09/04 0:00	calc
Sum of Cations		11.9			meq/L	0.1	0.5	11/09/04 0:00	calc
Chloride	M325.2 - Colorimetric	9			mg/L	1	5	10/28/04 10:00	ccp/pb
Lab Filtration	SM 3030 B							10/19/04 17:56	gac
Oil & Grease, Total Recoverable	M1664 - Gravimetric		U	*	mg/L	2	10	10/29/04 4:57	mah
Residue, Filterable (TDS) @180C	M160.1 - Gravimetric	660	H	*	mg/L	10	20	10/29/04 16:48	jah
Residue, Non-Filterable (TSS) @105C	M160.2 - Gravimetric		UH	*	mg/L	5	20	11/03/04 11:21	ktd
Sulfate	M375.3 - Gravimetric	210			mg/L	10	50	10/28/04 15:49	ktd
TDS (calculated)	Calculation	645			mg/L	10	50	11/09/04 0:00	calc
TDS (ratio - measured/calculated)	Calculation	1.02						11/09/04 0:00	calc

** Please refer to Extended Qualifier Report for detail.*

APPENDIX 7-12

Pace Canyon Fan Portal Site

TABLE OF CONTENTS

Section — Page

710 INTRODUCTION 7-12-1

732 Sediment Control Measures 7-12-1

732.100 Siltation Structures 7-12-1
732.200 Sedimentation Ponds 7-12-1

Compliance Requirements 7-12-2
MSHA Requirements 7-12-2

732.300 Diversions 7-12-2
732.400 Road Drainage 7-12-4

733 Impoundments 7-12-4

733.100 General Plans 7-12-4

Certification 7-12-4
Maps and Cross Sections 7-12-4
Narrative 7-12-4
Subsidence Survey Results 7-12-4
Hydrologic Impact 7-12-5
Design Plans and Construction Schedule 7-12-5

733.200 Permanent and Temporary Impoundments 7-12-5

Requirements 7-12-5
Permanent Impoundments 7-12-5
Temporary Impoundments 7-12-5
Hazard Notifications 7-12-5

734 Discharge Structures 7-12-5

740 DESIGN CRITERIA AND PLANS 7-12-5

741 General Requirements 7-12-5

742 Sediment Control Measures 7-12-6

742.100 General Requirements 7-12-6

TABLE OF CONTENTS (Continued)

Section — Page

Design 7-12-6
Measures and Methods 7-12-6

742.200 Siltation Structures 7-12-6

General Requirements 7-12-6
Sedimentation Ponds 7-12-7
Other Treatment Facilities 7-12-10
Exemptions 7-12-10

742.300 Diversions 7-12-11

General Requirements 7-12-11
Diversion of Perennial and Intermittent Streams 7-12-12
Diversion of Miscellaneous Flows 7-12-12

742.400 Road Drainage 7-12-14

All Roads 7-12-14

743 Impoundments 7-12-14

744 Discharge Structures 7-12-14

744.100 Erosion Protection 7-12-14
744.200 Design Standards 7-12-15

LIST OF TABLES

Table

7-1 Summary of Watershed Data 7-12-9

7-2 Stage-Capacity Curve for the Sediment Trap 7-12-9

7-3 Summary of Diversion Ditches 7-12-13

7-4 Summary of Diversion Culverts 7-12-13

LIST OF PLATES

Plate

PC7-4 Pace Canyon Fan Sediment Trap Detail and Cross Sections

PC7-5 Pace Canyon Fan Disturbed Area Diversions

PC7-5A Pace Canyon Fan Sediment Control Map

PC7-6 Pace Canyon Fan Undisturbed Watershed Boundaries

PC7-7 Pace Canyon Fan Reclamation Watershed Boundaries

LIST OF ATTACHMENTS

Attachment

1 Hydrology Calculations

2 Alternate Sediment Control Calculations

3 Reclamation Hydrology Calculations

710 INTRODUCTION

This appendix gives details regarding the drainage and sediment controls proposed for the Pace Canyon Fan Portal Site. Sections of Chapter 7 of the M&RP that would require significant revisions or additions related to the Pace Canyon Fan Portal Site have been recreated in this appendix to minimize confusion between the Dugout Canyon Site and the Pace Canyon Fan Portal Site. To aid in review the same numbering system used in Chapter 7 has been used in this appendix. Chapter 7 of the M&RP should be referred to for any sections not included in this appendix.

732 Sediment Control Measures

The sediment control measures for the Pace Canyon Fan Portal Area have been designed to prevent additional contributions of sediment to streamflow or to runoff outside the permit area. In addition, they have been designed to meet applicable effluent limitations, and minimize erosion to the extent possible.

The structures to be used for the runoff-control plan for the area include disturbed and undisturbed area diversion channels, a sediment trap, containment berms, silt fences, and road diversions and culverts.

732.100 Siltation Structures

The siltation structure within the disturbed area will be a sediment trap as described in Section 732.200.

732.200 Sedimentation Ponds

There will be no sediment pond at the fan portal site, instead there is a single sediment trap located at the southwest end of the disturbed area. The sediment trap topography and cross sections are presented on Plate PC 7-4. Details regarding the sediment trap design are presented in this appendix.

Sediment accumulation will be removed periodically as needed. A large sediment load to this sediment trap is not anticipated since Alternate Sediment Control Measures ("ASCM") are being used at the site. Alternate sediment control calculations are included in this appendix that

demonstrate that the sediment yield from the site will be less than before the site was built without a sediment trap. Thus, the sediment trap is not expected to accumulate a large volume of sediment. The sediment will be disposed of at the approved waste rock disposal sites as described in Chapter 5, Section 520 of this M&RP.

The sediment trap is within the disturbed area boundary and is subject to final reclamation. The area is included in the calculation of the disturbed area subject to bonding and in the calculation of final reclamation costs.

Compliance Requirements. The sediment trap will be maintained until removal in accordance with the reclamation plan (see Section 540 of this M&RP). When the pond is removed, the land will be revegetated in accordance with the reclamation plan defined in Section 540.

The sediment trap was designed to contain approximately 60% of the runoff from the 10-year, 24-hour storm event. The spillway for the sediment trap will easily pass the peak flow resulting from the 25-year, 6-hour precipitation event.

MSHA Requirements. MSHA requirements defined in 30 CFR 77.216 are not applicable since the sediment trap will not impound water or sediment to an elevation of 20 feet or more above the upstream toe of the structure. The trap will also store a volume less than 20 acre-feet.

732.300 Diversions

The objective of the runoff control plan is to isolate, to the maximum degree possible, runoff from disturbed areas from that of undisturbed areas. This is accomplished by:

- Building all facilities at least 30 feet from Pace Creek;
- Routing runoff from the adjacent undisturbed areas above the facilities through culverts and diversion ditches where feasible to bypass the disturbed area; and
- Routing any runoff from undisturbed areas which enters the disturbed area into the sediment control system.

The location of each diversion ditch or culvert for the site is presented on Plate PC7-5. Details regarding design of the diversions are presented in this appendix. A brief list of the proposed diversion structures follows (refer to Plates PC7-5 and PC7-6 for the location of each watershed boundary):

Diversion Ditches:

- Interception ditch PCUD-1 above the generators and fan structure will collect runoff from adjacent undisturbed watersheds and direct the runoff into a tributary of Pace Creek.

- Undisturbed drainage ditch PCUD-2 will re-establish a historic channel blocked by a rock fall. The rock fall caused a second channel to form, which does not connect to the existing channel below the existing road. The re-established ditch channel will permanently move the drainage away from the site facilities and will connect with the existing channel below the road. The ditch will remain in place after reclamation.

- Disturbed drainage ditch PCD-1 will be located upstream from the sediment trap. The majority of runoff from the site will reach the sediment trap by sheet flow. This ditch will collect the sheet flow and safely convey the runoff into the sediment trap.

Diversion Culverts:

- Culverts PCUC-1, 2 and 3 will all divert undisturbed runoff around the disturbed area.

- Culvert PCDC-1 will convey runoff in excess of the sediment trap's capacity to a tributary of Pace Creek. This culvert is the sediment trap's spillway.

All diversion ditches will be maintained with adequate riprap or alternative erosion protection in the ditch sections where flow velocities are predicted to be sufficiently high to require a ditch lining. Adequate ditch capacities will be maintained in all ditch sections. Culverts will be kept free of debris and each outlet will be protected with riprap where deemed necessary. Detailed diversion designs are presented in Attachment 1 of this appendix.

732.400 Road Drainage

Road drainage facilities will include a water bar to divert road runoff into the adjacent drainage just above the site and two culverts to divert runoff from undisturbed drainages under the road. After site construction has been completed the interim sediment control will be removed (Section 731.100 in M&RP)and the road drainage from the realigned BLM road will be treated the same as the rest of the road. A berm will prevent any runoff from the fan portal site from mixing with the road drainage.

Road drainage diversions and culverts will be maintained and repaired, as needed, following major storm events.

733 Impoundments

733.100 General Plans

There will be a single sediment trap operating at the site as described in Section 732.200. The sediment trap topography and cross sections are presented on Plate PC 7-4 and design information is presented in Attachment 1 of this appendix.

Certification. All maps and cross sections of the sedimentation trap have been prepared by or under the direction of, and certified by a qualified, registered, professional engineer.

Maps and Cross Sections. The topography and cross sections for the sediment trap are provided on Plate PC7-4.

Narrative. A description of the sediment trap is presented in Sections 732.200 and 742 of this appendix.

Subsidence Survey Results. No underground coal mining will occur beneath the proposed sediment trap. Therefore, there will be no effects on the sediment trap from subsidence.

Hydrologic Impact. The hydrologic and geologic information required to assess the hydrologic impacts of the proposed sediment trap are presented in Section 724 and Chapter 6 of this M&RP, respectively.

Design Plans and Construction Schedule. There are no additional structures proposed for the mining operation at this time. Any structures proposed in the future will not be constructed until the Division has approved the detailed design plan for the structure.

733.200 Permanent and Temporary Impoundments

Requirements. The sediment trap has been designed using current, prudent engineering practices.

Permanent Impoundments. There are no permanent impoundment structures proposed for use in mining and reclamation operations within the disturbed and adjacent areas.

Temporary Impoundments. The Division's authorization is being sought for the construction of the sediment trap as a temporary impoundment at the fan portal site as part of coal mining and reclamation operations.

Hazard Notifications. The sediment trap will be examined for structural weakness and erosion and if a potential hazard to the public exists the Division will be promptly informed. A plan will be formulated to mitigate the hazard associated with the sediment trap.

740 DESIGN CRITERIA AND PLANS

741 General Requirements

This appendix includes site-specific plans that incorporate minimum design criteria for the control of drainage from disturbed and undisturbed areas associated with the Pace Canyon Fan Portal Site.

742 Sediment Control Measures

742.100 General Requirements

Design. Sediment-control measures have been designed to provide the following:

- Prevent additional contributions of sediment to stream flow or to runoff outside the permit area;
- Meet the effluent limitations defined in Section 751; and
- Minimize erosion to the extent possible.

Measures and Methods. The sediment control measures at the site will include practices carried out within and adjacent to the disturbed area. Sediment control methods will include:

- Retention of sediment within the disturbed area;
- Diversion of runoff away from the disturbed area;
- Diversion of runoff using channels or culverts through disturbed areas to prevent additional erosion;
- Provision of silt fences, riprap, contemporaneous revegetation, vegetative sediment filters, a sediment trap, and other measures that reduce overland flow velocities, reduce runoff volumes or trap sediment; and
- Treatment of mine drainage in underground sumps.

742.200 Siltation Structures

General Requirements. Additional contributions of suspended solids and sediment to stream flow or runoff outside the permit area will be prevented to the extent possible using alternate sediment control measures and a sediment trap. The sediment trap will be constructed as soon as practical

when construction commences. The structures will be certified by a qualified registered professional engineer.

The sediment trap has been designed and will be constructed and maintained as described in Chapter 5 and Sections 733 and 743.

The sediment trap is part of an alternate sediment control system at the site. Due to the small size of the site a sedimentation pond is not reasonable. Thus alternate sediment control is being used. A combination of sediment control methods will be used. As shown on Plate PC7-5A three types of alternate sediment control will be used in addition to the sediment trap. In areas that will not be disturbed after construction and which have 2:1 slope or flatter the area will be deep gouged mulched and hydroseeded. These areas include the topsoil stockpile and its angle of repose slopes even though there will also be a full containment berm around the stockpile. This is the same sediment control method that has been used during final reclamation of many sites with great success. The areas that may be disturbed during operation, such as the sediment trap area, and areas of very steep slopes will be mulched and hydroseeded. Finally, the operational areas and areas prevented from being vegetated by MSHA requirements will be covered by gravel or riprap. The gravel used will be washed 2 inch minus gravel. In Attachment 2 of this appendix alternate sediment control calculations have been made to demonstrate that the above three methods reduce the operational sediment yield of the site to less than the pre-mining sediment yield. Thus, the alternate sediment control measures sufficiently control sediment yield without the use of a sedimentation pond. The proposed sediment trap will provide additional sediment control.

Sediment ponds. A single sediment trap has been designed for the site. The sediment trap will be located in the southwest corner of the disturbed area.

Design, Construction, and Maintenance

Sediment Storage Volume. The sediment trap has been designed to control sediment from disturbed and undisturbed areas. The disturbed area contributing runoff to the sediment trap contains 1.93 acres from watershed PCWS-1 (portions of which will be undisturbed or contemporaneously reclaimed). As discussed previously the sediment trap will be installed in addition to alternate sediment control measures. The sediment load of the runoff flowing into the sediment trap will be less than if an equal amount of runoff from an undisturbed area flowed into the sediment trap. Thus, sediment is expected to accumulate slowly. Since this is not a

sedimentation pond there is not a maximum specified sediment storage volume. However, sediment will be removed when accumulated sediment fills up approximately half of the sediment trap's capacity.

Detention Time. The combination of the alternate sediment control measures and sediment trap should allow any effluent to meet UPDES and 40 CFR Part 434 limitations.

Design Event. The designed sediment trap can contain about 40% of the runoff resulting from the 10-year, 24-hour precipitation event before runoff flows out the spillway. The sediment trap can hold the entire 10-year, 24-hour precipitation event if the spillway is plugged.

Sediment Trap Description. Watershed PCWS-1 defines the area that flows to the sediment trap. This watershed includes both disturbed and undisturbed areas.

The curve numbers used to determine the runoff volumes were based on information presented in Attachment 1 of this appendix. The area weighted average curve number for PCWS-1 was estimated to be 83. Refer to Table 7-1 for a list of all disturbed and undisturbed watershed areas.

The storm runoff volume to the sediment trap resulting from the 10-year, 24-hour storm event was calculated to be 4624 cubic feet (0.11 acre-feet). The calculations, presented in Attachment 1 are based on hydrologic design methods described in Appendix 7-10. As presented above, the maximum sediment storage volume is approximately half of the sediment trap capacity or about 1000 cubic feet).

The spillway on the sediment trap will be set at an elevation of 6991.0. The spillway will be an eighteen inch CMP. As calculations in Attachment 1 demonstrate, this spillway can easily pass the runoff from a 25-year 6-hour storm event.

From the final analysis of the 25-year, 6-hour storm event, the maximum inflow rate to the sediment trap from storm runoff under design conditions was calculated to be 0.88 cubic feet per second (cfs). Although the sediment trap will reduce the peak outflow the same flow of 0.88 cfs was used to design the spillway. The spillway has a maximum capacity of 5.5 cfs without generating a headwater. The top of the sediment trap embankment will be at least 3 feet above the inlet elevation for the spillway. Therefore, the trap has been designed with adequate freeboard. The spillway outlet will be protected by the placement of D_{50} = 6 inch riprap (minimum).

TABLE 7-1
SUMMARY OF WATERSHED DATA

Watershed[a]	Curve Number	Area (acres)	Time of Concentration (hours)
PCWS-1	83	1.93	0.053
PCWS-2	80	2.99	0.043
PCWS-3	80	39.78	0.126
PCWS-4	80	149.30	0.235

(a) See Plates PC7-5, and 7-6 for watershed boundaries

TABLE 7-2
STAGE-CAPACITY CURVE FOR THE SEDIMENT TRAP

ELEVATION (FT)	AREA (FT^2)	INCREMENTAL VOLUME (FT^3)	CUMULATIVE VOLUME (FT^3)
6,986	55.5		0
		347.3	
6,988	291.8		347.3
		933.3	
6,990	641.5		1280.6
		1740.3	
6,992	1098.8		3020.9
		2909.3	
6,994	1810.5		5930.2

Dewatering Device. The primary spillway will be the only outlet for stormwater in the sediment trap. Water will be discharged from the pond in accordance with UPDES guidelines.

Short Circuiting. Short circuiting may occur if the storage capacity of the sediment trap is exceeded. However, the alternate sediment control measures will adequately control the sediment yield from the site. The sediment trap will still provide sediment control beyond what is required.

Sediment Removal. Sediment removal from the sediment trap will occur when the sediment level reaches approximately 50% of the sediment trap's storage capacity. This corresponds to an approximate elevation of 6989.5 or 1.5 feet below the spillway inlet elevation. The sediment removed from the sediment trap will be transported and disposed of as discussed in Chapter 5, and Chapter 7, Section 732.200 of this M&RP. Water that meets the quality standards set forth in the UPDES permit will be discharged to Pace Creek before sediment cleanout begins. Water not meeting the standards will be used for dust suppression within the disturbed area or on mine roadways.

Excessive Settlement. The majority of the sediment trap is to be excavated from native undisturbed material or from under the existing road, thereby making settlement highly unlikely. Less than 4 feet of the embankment will be constructed. The portion of the embankment to be constructed will be constructed in a manner to minimize settlement.

Embankment Material. During construction of the sediment trap, any material to be used in the embankment will be inspected to ensure the material is free of sod, large roots, frozen soil, and acid- or toxic forming coal-processing waste.

Compaction. The sediment trap will be primarily excavated out of native undisturbed ground, thereby eliminating the need for additional compaction. Any portion of the embankment constructed will be compacted to a minimum dry density of 90 % as determined by ASTM D1557.

MSHA Sediment Ponds. MSHA requirements defined in 30 CFR 77.216 are not applicable at this site. Refer to Section 732.200.

Other Treatment Facilities. There are no other treatment facilities within the mine permit area.

Exemptions. No exemptions are being proposed at this time.

742.300 Diversions

General Requirements. The diversions within the permit area will consist of drainage ditches and culverts. All diversions within the permit area have been designed to minimize adverse impacts to the hydrologic balance, to prevent material damage outside the permit area, and to assure the safety of the public.

All diversions and diversion structures have been designed and will be constructed, and maintained and used to:

Be stable;

Provide protection against flooding and resultant damage to life and property;

Prevent, to the extent possible, additional contributions of suspended solids to stream flow outside the permit area; and

Comply with all applicable local, state, and federal laws and regulations.

All diversions within the disturbed area will be removed when no longer needed. The diversions will be reclaimed in accordance with the reclamation plan defined in Chapter 5.

Peak discharge rates from the undisturbed and disturbed area drainages within the area were calculated for use in designing diversion ditches and culverts. The storm runoff calculations for the temporary diversion structures were based on the 10-year, 6-hour precipitation event of 1.35 inches.

Curve numbers were based on those defined in Attachment 1 of this appendix and professional judgement. A description of the methods used to determine the peak discharge rates is presented in Appendix 7-10 of this M&RP.

The disturbed and undisturbed drainage areas within and above the facilities area are presented on Plate PC7-5. A summary of the characteristics of watersheds contributing to the diversions is presented in Table 7-1.

All proposed diversions are presented on Plate PC7-5. The minimum capacity and freeboard of each diversion ditch and culvert was determined based on the minimum ditch slope. The maximum velocity and need for a channel lining or outlet protection was calculated based on the maximum ditch or culvert slope. Slopes were measured from a aerial topography generated with a 1 foot contour interval. A description of the methods used to determine diversion capacities, flow velocities, and riprap sizes is presented in Attachment 1 of this appendix. All diversion calculations are presented in Attachment 1 of this appendix.

Diversion of Perennial and Intermittent Streams. No perennial streams will be diverted at this site. The 24-inch culvert PCUC-2 will divert the runoff from the intermittent stream south of the portal. The 36-inch culvert PCUC-3 will divert runoff from the intermittent stream north of the site. The design calculations for both culverts can be found in Attachment 1 of this appendix.

Diversion of Miscellaneous Flows. Diversion ditches and culverts have been utilized within the fan portal area to divert miscellaneous flows from disturbed and undisturbed area drainages.

Diversion Ditches. A summary table of the minimum channel geometry, channel slope, peak discharge, minimum riprap requirements, maximum flow velocity and minimum freeboard values for each diversion ditch within the facilities area is presented in Table 7-3. All calculations are contained in Attachment 1 of this appendix. Each ditch has adequate capacity and erosion protection to safely pass the peak flow resulting from the 10-year, 6-hour precipitation event. A description of the diversion ditches within the facilities area is presented in Section 732.300.

Diversion Culverts. A summary table of the culvert size, slope, peak discharge, outlet riprap, and outlet flow velocity for each culvert within the facilities area is presented in Table 7-9.

Calculations are contained in Appendix 7-9. Except for culverts UC-4 and UC-5, each culvert has adequate capacity and outlet erosion protection to safely pass the peak flow resulting from the 10-year, 24-hour precipitation event. Culverts UC-4 and UC-5 were designed to convey the peak runoff resulting from the 100-year, 6-hour precipitation event. A description of the diversion culverts within the facilities area is presented in Section 732.300.

Diversion Berms. Although several berms are noted on Plate PC7-5, these will be installed primarily to meet MSHA requirements for safety concerns adjacent to slopes. However, these

berms may also locally convey runoff from higher-elevation pads to lower-elevation pads, where it will be

TABLE 7-3
SUMMARY OF DIVERSION DITCHES

Diversion	Minimum Bottom Width (ft)	Minimum Top Width (ft)	Minimum Depth (ft)	Side Slopes (H:V)	Minimum Slope (%)	Maximum Slope (%)	Peak Flow[a] (cfs)	Required Riprap D_{50} (in)	Minimum Freeboard (ft)
PCUD-1	0	4.0	1.0	2:1	3.6	10.0	0.57	none	0.67
PCUD-2	2.5	6.5	1.0	2:1	10.4	32.3	6.33	6	0.62
PCD-1	1	4.0	1.0	2:1	14.3	36.4	0.54	none	0.88

[a] Peak discharge resulting from the 10-year, 6-hour precipitation event.

Note: Constructed dimensions of the ditches may vary. However, an adequate cross section will be maintained to ensure that the ditches have adequate hydraulic capacity.

TABLE 7-4
SUMMARY OF DIVERSION CULVERTS

Diversion Culvert	Minimum Diameter (in)	Material	Inlet Type	Outlet Slope (%)	Peak Flow[a] (cfs)	Outlet Riprap D_{50} (in)
PCUC-1	18	CMP	Mitered	6.9	0.57	none
PCUC-2	24	CMP	Mitered	10.7	6.33	12
PCUC-3	36	CMP	Mitered	2.5	19.05	6
PCDC-1	18	CMP	Mitered	24.2	0.88	6
Mine Water Discharge Culvert	6	HDPE	NA	28.2	0.70	15

[a] Peak discharge resulting from the 10-year, 6-hour precipitation event except culverts PCDC-1 (designed for the peak discharge resulting from the 25-year, 6-hour event).

conveyed via diversion ditches to the sediment trap. Since none of the berms have been designed specifically to convey runoff, no calculations concerning the hydraulic characteristics of these berms are provided.

742.400 Road Drainage

All Roads. The BLM road will be realigned as shown on Plate PC5-2, in Appendix 5-10. Once the road has been realigned it will be maintain as the rest of the road above and below the realigned segment.

743 Impoundments

All pertinent information regarding the sediment trap is presented in Sections 732.200 and 742.200.

744 Discharge Structures

The discharge structures within the permit area will be the spillway on the sediment trap and a discharge line from the underground workings. The spillway on the sediment trap will adequately pass the peak discharge from the 25-year, 6-hour precipitation event. Detailed information concerning the sediment trap is presented in Sections 732.200 and 742.200.

The spillway on the sediment trap will consist of a 18-inch diameter CMP. The spillway will discharge to a tributary of Pace Creek. The design calculations for the spillway is presented in Attachment 1 of this appendix. The spillway details are presented on Plate PC7-4.

744.100 Erosion Protection

The only discharge structures associated with an impoundment will be the spillway from the sediment trap. The flow velocity at the spillway outlet under peak flow conditions is 7.19 fps. This velocity is considered to be erosive. Therefore, riprap with a D_{50} of 6 inches (minimum) will be installed at the culvert outlet. The calculations for the spillway outlet are presented in Attachment 1 of this appendix.

744.200 Design Standards

All discharge structures within the disturbed area have been designed and will be constructed according to standard engineering procedures.

APPENDIX 7-12
ATTACHMENT 1

Hydrology Calculations

REGISTERED PROFESSIONAL ENGINEER
4-15-05
No. 189797
LAYNE D.
JENSEN
STATE OF UTAH

— Pace Canyon Portal Site —

Rainfall Depths

10-yr	6-hr	1.35 in.
10-yr	24-hr	1.95 in
25-yr	6-hr	1.65 in
25-yr	24-hr	2.35 in
100-yr	6-hr	2.05 in

Curve Numbers

The curve number will be determined by combining vegetation, Hydrologic soil group, Vegetation density, Vegetation condition, and Field observation

The vegetation type is identified as mixed conifer on Plate 3-1 This vegetation type is very similar to pinyon-juniper. In fact Mt. Nebo who did a veg. study on the portal site identified the site as being a Pinyon-juniper vegetation type. (see Plate 3-1E)

Plate 2-1 identifies two soil types in the associated watersheds map unit 96 Rock outcrop Rubbleland Travesilla complex and map unit 84 Pado - Rock outcrop complex 50-70 percent slope. The Soil Survey of Carbon Area, Utah (1988) identifies the Hydrologic Soil Group as D for these soils.

Field observation indicates that the drainages on either side of the portal area do not flow for smaller storm events.

A general description of the vegetation type indicates a cover density between 60-70% which indicates a fair hydrologic condition.

According to Table 2-2d (pg 3) The curve number for the Pinyon-juniper vegetation type is 80

During the operational period there will also be reclaimed areas and graveled pads and roads.

The curve number for reclaimed area will be assumed to be 80 although with the use of the deep gouging method the reclaimed areas will not generate any runoff for a few years.

The curve number for the pad and road areas will be assumed to be 89 see Table 9.1 (pg 4 of this attachment)

Four watersheds have been identified. Three of the four watersheds are upgradient of the disturbed area and do not contain disturbed areas related to the portal contruction.

Thus these three watersheds have a curve number of 80

The Forth watershed contains the disturbed area. This watershed contains, undisturbed areas, road and pad areas, and reclaimed areas. The curve number will be determined by using an area weighted average.

Reclaimed	= 0.45 Acre	CN = 80
road/pad	= 0.69 Acre	CN = 89
undisturbed	= 1.00 Acres	CN = 80
	2.14 Acres	

$$CN = \frac{(0.45)(80) + (0.69)(89) + (1.00)(80)}{2.14} = 82.9 \Rightarrow 83$$

3

Table 2-2d.—Runoff curve numbers for arid and semiarid rangelands[1]

Cover description		Curve numbers for hydrologic soil group—			
Cover type	Hydrologic condition[2]	A[3]	B	C	D
Herbaceous—mixture of grass, weeds, and low-growing brush, with brush the minor element.	Poor		80	87	93
	Fair		71	81	89
	Good		62	74	85
Oak-aspen—mountain brush mixture of oak brush, aspen, mountain mahogany, bitter brush, maple, and other brush.	Poor		66	74	79
	Fair		48	57	63
	Good		30	41	48
Pinyon-juniper—pinyon, juniper, or both; grass understory.	Poor		75	85	89
	Fair		58	73	80
	Good		41	61	71
Sagebrush with grass understory.	Poor		67	80	85
	Fair		51	63	70
	Good		35	47	55
Desert shrub—major plants include saltbush, greasewood, creosotebush, blackbrush, bursage, palo verde, mesquite, and cactus.	Poor	63	77	85	88
	Fair	55	72	81	86
	Good	49	68	79	84

[1]Average runoff condition, and $I_a = 0.2S$. For range in humid regions, use table 2-2c.

[2]Poor <30% ground cover (litter, grass, and brush overstory).
Fair 30 to 70% ground cover.
Good >70% ground cover.

[3]Curve numbers for group A have been developed only for desert shrub.

Post-it® Fax Note 7671	Date 4/12/99	# of pages ▶ 2
To Lane Jenson	From Sharon Falvey	
Co./Dept. Earth Fax	Co. DOGM	
Phone #	Phone # 801 538-5260	
Fax # 561-[redacted]-1861	Fax #	

APR-12-99 SUN 07:26 AM DIV OF OIL GAS MINING FAX NO. 3593940 P. 01

Table 9.1.--Runoff curve numbers for hydrologic soil-cover complexes

(Antecedent moisture condition II, and $I_a = 0.2\ S$)

Land use	Cover: Treatment or practice	Cover: Hydrologic condition	Hydrologic soil group A	B	C	D
Fallow	Straight row	----	77	86	91	94
Row crops	"	Poor	72	81	88	91
	"	Good	67	78	85	89
	Contoured	Poor	70	79	84	88
	"	Good	65	75	82	86
	"and terraced	Poor	66	74	80	82
	" " "	Good	62	71	78	81
Small grain	Straight row	Poor	65	76	84	88
		Good	63	75	83	87
	Contoured	Poor	63	74	82	85
		Good	61	73	81	84
	"and terraced	Poor	61	72	79	82
		Good	59	70	78	81
Close-seeded legumes 1/ or rotation meadow	Straight row	Poor	66	77	85	89
	" "	Good	58	72	81	85
	Contoured	Poor	64	75	83	85
	"	Good	55	69	78	83
	"and terraced	Poor	63	73	80	83
	"and terraced	Good	51	67	76	80
Pasture or range		Poor	68	79	86	89
		Fair	49	69	79	84
		Good	39	61	74	80
	Contoured	Poor	47	67	81	88
	"	Fair	25	59	75	83
	"	Good	6	35	70	79
Meadow		Good	30	58	71	78
Woods		Poor	45	66	77	83
		Fair	36	60	73	79
		Good	25	55	70	77
Farmsteads		----	59	74	82	86
Roads (dirt) 2/		----	72	82	87	89
(hard surface) 2/		---	74	84	90	92

1/ Close-drilled or broadcast.
2/ Including right-of-way.

Watershed Area a	Drainage Area (ac)	Curve Number	S (in)	Y (%)	I (ft)	L (hr)	Time of Conc. (hr)	Peak Flow (cfs)
PCWS-1	2.14	83	2.048	46.9	560	0.026	0.044	0.61
PCWS-2	2.55	80	2.500	70.9	535	0.023	0.038	0.49
PCWS-3	39.78	80	2.500	70.4	2377	0.076	0.126	6.33
PCWS-4	149.3	80	2.500	57.7	4563	0.141	0.235	19.05

Notes

Watershed locations can be found on Plates PC7-5 and PC7-6
S = 1000/CN - 10
Y = average watershed slope = (length of contour lines)(contour interval)/(watershed area)
I = hydraulic length
L = watershed lag =(I^0.8(S+1)^0.7) / (1900(Y)^0.5)
Time of Concentration + 1.67L
Peak Flow is based on a 10-yr 6-hr storm event (calculations can be found on pages 6 to 9)

revised 1-05

Triangular Hydrograph Calculations using

SCSHYDRO Program

Watershed I.D.:
PCWS-1

INPUT SUMMARY

STORM :	WATERSHED :
Dist.= SCS Type `b'	Area = 2.14 acres
Depth = 1.35 inches	CN = 83.00
Duration = 6.0 hrs	Time conc.= 0.04 hrs

OUTPUT SUMMARY

Runoff depth: 0.296 inches
Initial abstr: 0.410 inches
Peak flow: 0.61 cfs (0.281 iph)
at time: 2.505 hrs

---

revised 1-05

Triangular Hydrograph Calculations using

SCSHYDRO Program

Watershed I.D.:
PCWS-2

INPUT SUMMARY

STORM :	WATERSHED :
Dist.= SCS Type `b'	Area = 2.55 acres
Depth = 1.35 inches	CN = 80.00
Duration = 6.0 hrs	Time conc.= 0.04 hrs

OUTPUT SUMMARY

Runoff depth: 0.216 inches
Initial abstr: 0.500 inches
Peak flow: 0.49 cfs (0.191 iph)
at time: 2.508 hrs

Triangular Hydrograph Calculations using

SCSHYDRO Program

Watershed I.D.:
PCWS-3

INPUT SUMMARY

STORM :	WATERSHED :
Dist.= SCS Type `b'	Area = 39.78 acres
Depth = 1.35 inches	CN = 80.00
Duration = 6.0 hrs	Time conc.= 0.13 hrs

OUTPUT SUMMARY

Runoff depth: 0.216 inches
Initial abstr: 0.500 inches
Peak flow: 6.33 cfs (0.158 iph)
at time: 2.537 hrs

Triangular Hydrograph Calculations using

SCSHYDRO Program

Watershed I.D.:
PCWS-4

INPUT SUMMARY

STORM :	WATERSHED :
Dist.= SCS Type `b'	Area = 149.30 acres
Depth = 1.35 inches	CN = 80.00
Duration = 6.0 hrs	Time conc.= 0.24 hrs

OUTPUT SUMMARY

Runoff depth: 0.216 inches
Initial abstr: 0.500 inches
Peak flow: 19.05 cfs (0.127 iph)
at time: 2.632 hrs

- Drainage Ditch Design -

Assumptions

1) All ditches designed for the 10-yr 6-hr storm event

2) When riprap is required the method presented by Searcy, (1967) will be used (see pg 22)

3) Riprap thickness is two times the D_{50}.

4) A Mannings n of 0.03 will be assumed for bare earth.

5) A Mannings n of 0.035 will be assumed for rocky earth.

6) A Mannings n for riprap channels will be determined using the following equation:

$$n = 0.0456 (D_{50} \times Slope)^{0.159}$$

(Abt. S.R. et.al. 1987)

D_{50} = median riprap size (in)
Slope = (ft/ft)

7) Filter blankets under riprap channels will be 1/2 the riprap thickness.

PCUD-1

Contributing watershed is 50% of PCWC-2

$Q_{10-6} = 0.25$ cfs

minimum slope = 1.7 %

maximum slope = 5 %

Triangular ditch

Side slopes = 2:1
Depth = 1'

Max velocity = 2.41 fps No riprap
Max depth = 0.56 ft
freeboard = 0.44 ft

See pages 13+14 for calculation sheets
See page 19 for the figure

PCUD-2

Contributing watershed is PCWS-3

$Q_{10-6} = 6.33$ cfs

minimum slope = 10.4 %

maximum slope = 32.3 %

Trapizoidal ditch

Side slopes = 2:1
Depth = 1'
Bottom Width = 2.5'
Riprap D_{50} = 6"

Max. Velocity = 6.58 fps < 7.5 fps ∴ ok
Max depth = 0.38 ft < 1 ft ok
freeboard = 0.62 ft

See pages 15+16 for the calculation sheet.
See page 20 for the figure

PCO-1

Contributing watershed: Depending on final grading upto 100% of the watershed will drain to this ditch
Assume 100% of PCWS-1

$Q_{10-6} = 0.61$ cfs

minimum slope = 14.3 %

max slope = 36.4 %

Trapizoidal ditch

Bottom Width = 1.25'
Side slope 2:1
Flow is against the berm on one side
Depth = 1 ft

max. velocity = 4.93 fps ∴ no riprap
max depth = 0.13 ft
freeboard = 0.87 ft

See pages 17+18 for the calculation sheets
See page 21 for the figure.

Berm Along East side of the site

The site is designed to cause runoff to sheet flow through the gravel on the pad, However, for this design it will be assumed that all runoff from PCWS-1 will flow along the berm.

$Q_{10-6} = 0.61$ cfs

min slope = 1.3%
max slope = 11.6 %

Triangular ditch

The slope on the berm may be up to 1:1 to promote sheet flow there shouldn't be a slope towards the berm. A Side slope of 10:1 will be assumed.
Depth = Berm Ht. = 1'

max. velocity = 3.33 fps ∴ No Riprap
max depth = 0.28 ft
freeboard. = 0.72 ft

See pages 18a and 18b for calculation sheets.
See page 21a for the figure.

PCUD-1 MIN SLOPE
Worksheet for Trapezoidal Channel

Project Description	
Worksheet	Pace Canyon Pc
Flow Element	Trapezoidal Cha
Method	Manning's Formi
Solve For	Channel Depth

Input Data		
Mannings Coeffic	0.030	bare earth
Slope	017000	ft/ft
Left Side Slope	2.00	V : H
Right Side Slope	2.00	V : H
Bottom Width	0.00	ft
Discharge	0.25	cfs

Results		
Depth	0.56	ft < 1.0 ft ∴ OK freeboard = 0.44'
Flow Area	0.2	ft²
Wetted Perim	1.25	ft
Top Width	0.56	ft
Critical Depth	0.43	ft
Critical Slope	0.063775	ft/ft
Velocity	1.61	ft/s
Velocity Head	0.04	ft
Specific Energ	0.60	ft
Froude Numb	0.54	
Flow Type	Subcritical	

© Haestad Methods, Inc.
EarthFax Engineering Inc
37 Brookside Road Waterbury, CT 06708 USA (203) 755-1666

PCUD-1 MAX SLOPE
Worksheet for Trapezoidal Channel

Project Description	
Worksheet	Pace Canyon Pc
Flow Element	Trapezoidal Cha
Method	Manning's Formı
Solve For	Channel Depth

Input Data		
Mannings Coeffic	0.030	bare earth
Slope	050000	ft/ft
Left Side Slope	2.00	V : H
Right Side Slope	2.00	V : H
Bottom Width	0.00	ft
Discharge	0.25	cfs

Results		
Depth	0.46	ft
Flow Area	0.1	ft²
Wetted Perim	1.02	ft
Top Width	0.46	ft
Critical Depth	0.43	ft
Critical Slope	0.063775	ft/ft
Velocity	2.41	ft/s < 5fps
Velocity Head	0.09	ft
Specific Energ	0.55	ft
Froude Numb	0.89	
Flow Type	Subcritical	

PCUD-2 MIN SLOPE
Worksheet for Trapezoidal Channel

Project Description	
Worksheet	Pace Canyon
Flow Element	Trapezoidal Channel
Method	Manning's Formula
Solve For	Channel Depth

Input Data		
Mannings Coefficient	0.042	$D_{50} = 6''$
Slope	0.104000	ft/ft
Left Side Slope	2.00	H : V
Right Side Slope	2.00	H : V
Bottom Width	2.50	ft
Discharge	6.33	cfs

Results		
Depth	0.38	ft
Flow Area	1.3	ft²
Wetted Perimeter	4.21	ft
Top Width	4.03	ft
Critical Depth	0.51	ft
Critical Slope	0.037939	ft/ft
Velocity	5.06	ft/s
Velocity Head	0.40	ft
Specific Energy	0.78	ft
Froude Number	1.60	
Flow Type	Supercritical	

PCUD-2 MAX SLOPE
Worksheet for Trapezoidal Channel

Project Description	
Worksheet	Pace Canyon Portal
Flow Element	Trapezoidal Channel
Method	Manning's Formula
Solve For	Channel Depth

Input Data		
Mannings Coefficient	0.051	$D_{50} = 6''$
Slope	0.323000 ft/ft	
Left Side Slope	2.00 H : V	
Right Side Slope	2.00 H : V	
Bottom Width	2.50 ft	
Discharge	6.33 cfs	

$n = 0.0456 (D_{50} \times \text{Slope})^{0.159}$

(Abt et al, 1987)

$n = 0.0456 (6 \times 0.323)^{0.159} = 0.051$

Results	
Depth	0.31 ft
Flow Area	1.0 ft²
Wetted Perimeter	3.88 ft
Top Width	3.73 ft
Critical Depth	0.51 ft
Critical Slope	0.054546 ft/ft
Velocity	6.58 ft/s
Velocity Head	0.67 ft
Specific Energy	0.98 ft
Froude Number	2.29
Flow Type	Supercritical

< 7.5 fps $\therefore$ ok

revised 1-05

PCD-1 MIN SLOPE
Worksheet for Trapezoidal Channel

Project Description	
Worksheet	Pace Canyon Pc
Flow Element	Trapezoidal Cha
Method	Manning's Formi
Solve For	Channel Depth

Input Data		
Mannings Coeffic	0.035	rocky earth
Slope	0.143000	ft/ft
Left Side Slope	2.00	V : H
Right Side Slope	2.00	V : H
Bottom Width	1.25	ft
Discharge	0.61	cfs

Results		
Depth	0.13	ft <1.0' ∴ ok freeboard = 0.87'
Flow Area	0.2	ft²
Wetted Perim	1.53	ft
Top Width	1.38	ft
Critical Depth	0.19	ft
Critical Slope	0.038858	ft/ft
Velocity	3.66	ft/s
Velocity Head	0.21	ft
Specific Energ	0.33	ft
Froude Numb	1.85	
Flow Type	Supercritical	

© Haestad Methods, Inc.
EarthFax Engineering Inc
37 Brookside Road Waterbury, CT 06708 USA (203) 755-1666

PCD-1 MAX SLOPE
Worksheet for Trapezoidal Channel

Project Description	
Worksheet	Pace Canyon Pc
Flow Element	Trapezoidal Cha
Method	Manning's Formı
Solve For	Channel Depth

Input Data		
Mannings Coeffic	0.035	rocky earth
Slope	0.364000	ft/ft
Left Side Slope	2.00	V : H
Right Side Slope	2.00	V : H
Bottom Width	1.25	ft
Discharge	0.61	cfs

Results		
Depth	0.10	ft
Flow Area	0.1	ft²
Wetted Perim	1.46	ft
Top Width	1.35	ft
Critical Depth	0.19	ft
Critical Slope	0.038858	ft/ft
Velocity	4.93	ft/s < 5.0 fps ∴ no riprap
Velocity Head	0.38	ft
Specific Energ	0.47	ft
Froude Numb	2.87	
Flow Type	Supercritical	

© Haestad Methods, Inc.
EarthFax Engineering Inc
37 Brookside Road Waterbury, CT 06708 USA (203) 755-1666

BERM DESIGN MINIMUM SLOPE
Worksheet for Triangular Channel

Project Description	
Worksheet	PACE CANYON
Flow Element	Triangular Char
Method	Manning's Form
Solve For	Channel Depth

Input Data			
Mannings Coeffic	0.030		Bare ground
Slope	013000	ft/ft	
Left Side Slope	1.00	H : V	
Right Side Slope	10.00	H : V	
Discharge	0.61	cfs	

Results			
Depth	0.28	ft	< 1.0' ∴ ok
Flow Area	0.4	ft²	
Wetted Perim	3.16	ft	
Top Width	3.03	ft	
Critical Depth	0.24	ft	
Critical Slope	0.028171	ft/ft	
Velocity	1.46	ft/s	
Velocity Head	0.03	ft	
Specific Energ	0.31	ft	
Froude Numb	0.70		
Flow Type	Subcritical		

BERM DESIGN MAXIMUM SLOPE
Worksheet for Triangular Channel

Project Description	
Worksheet	PACE CANYON
Flow Element	Triangular Char
Method	Manning's Form
Solve For	Channel Depth

Input Data		
Mannings Coeffic	0.030	Bare ground
Slope	116000	ft/ft
Left Side Slope	1.00	H : V
Right Side Slope	10.00	H : V
Discharge	0.61	cfs

Results		
Depth	0.18	ft
Flow Area	0.2	ft²
Wetted Perim	2.09	ft
Top Width	2.01	ft
Critical Depth	0.24	ft
Critical Slope	0.028171	ft/ft
Velocity	3.33	ft/s < 5.0 fps ∴ no riprap
Velocity Head	0.17	ft
Specific Energ	0.35	ft
Froude Numb	1.94	
Flow Type	Supercritical	

© Haestad Methods, Inc.
EarthFax Engineering Inc
37 Brookside Road Waterbury, CT 06708 USA (203) 755-1666

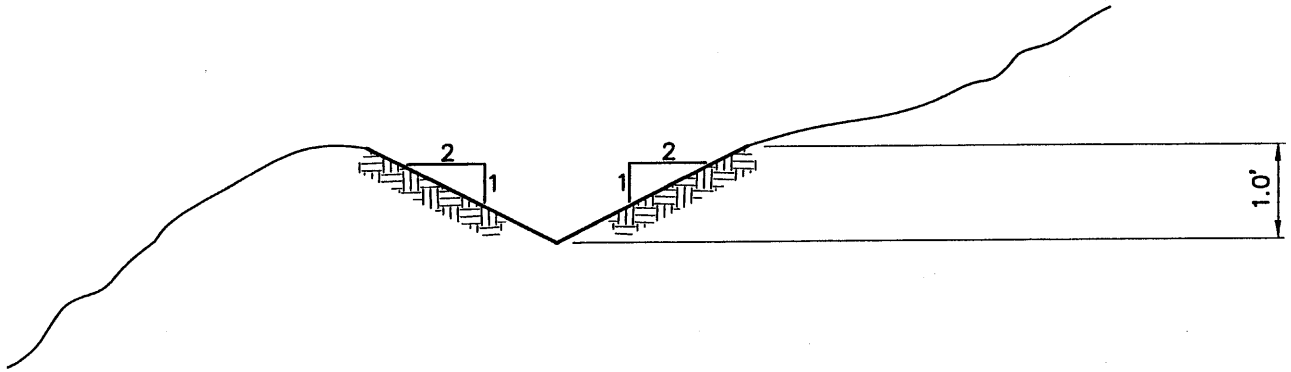

NO SCALE

PCUD–1

EarthFax

G:\UC801\07\HYDROLOGY\FG-PCUD-1.DWG

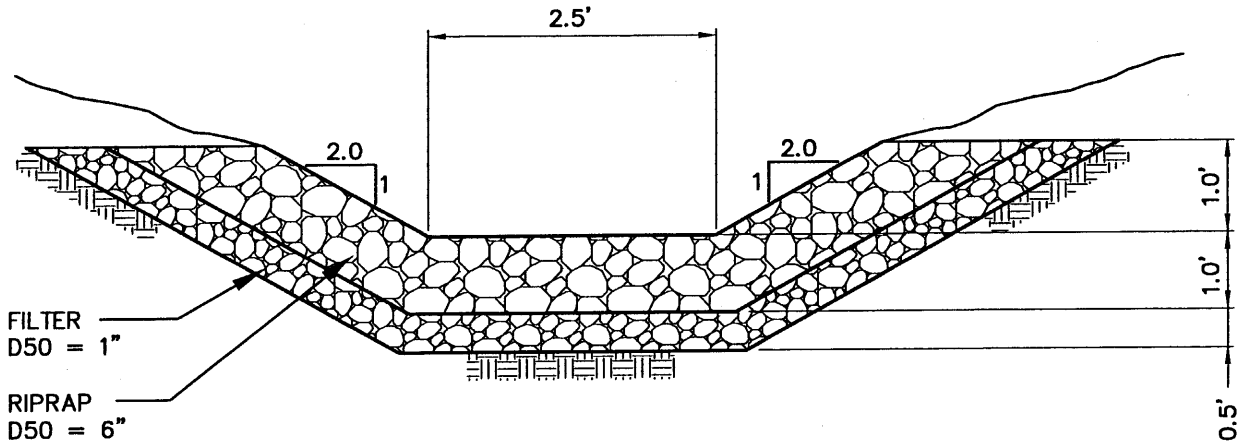

NO SCALE

PCUD–2

EarthFax

G:\UCB01\07\HYDROLOGY\FIG-PCUD-2.DWG

20

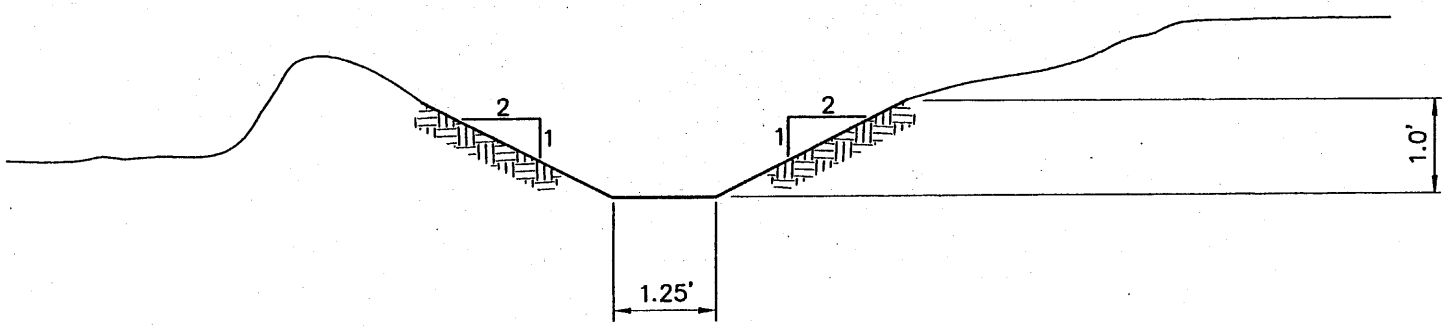

NO SCALE

PCD–1

EarthFax

G:\UCB01\07\HYDROLOGY\FG-PCD-1.DWG

revised 1-05

21

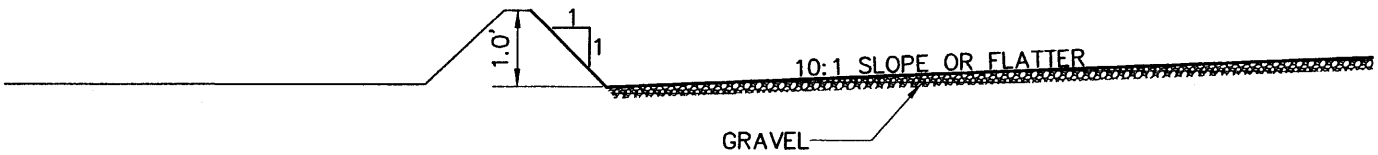

NO SCALE

BERM

EarthFax

G:\UCB01\07\HYDROLOGY\FIG-BERM.DWG

7/9

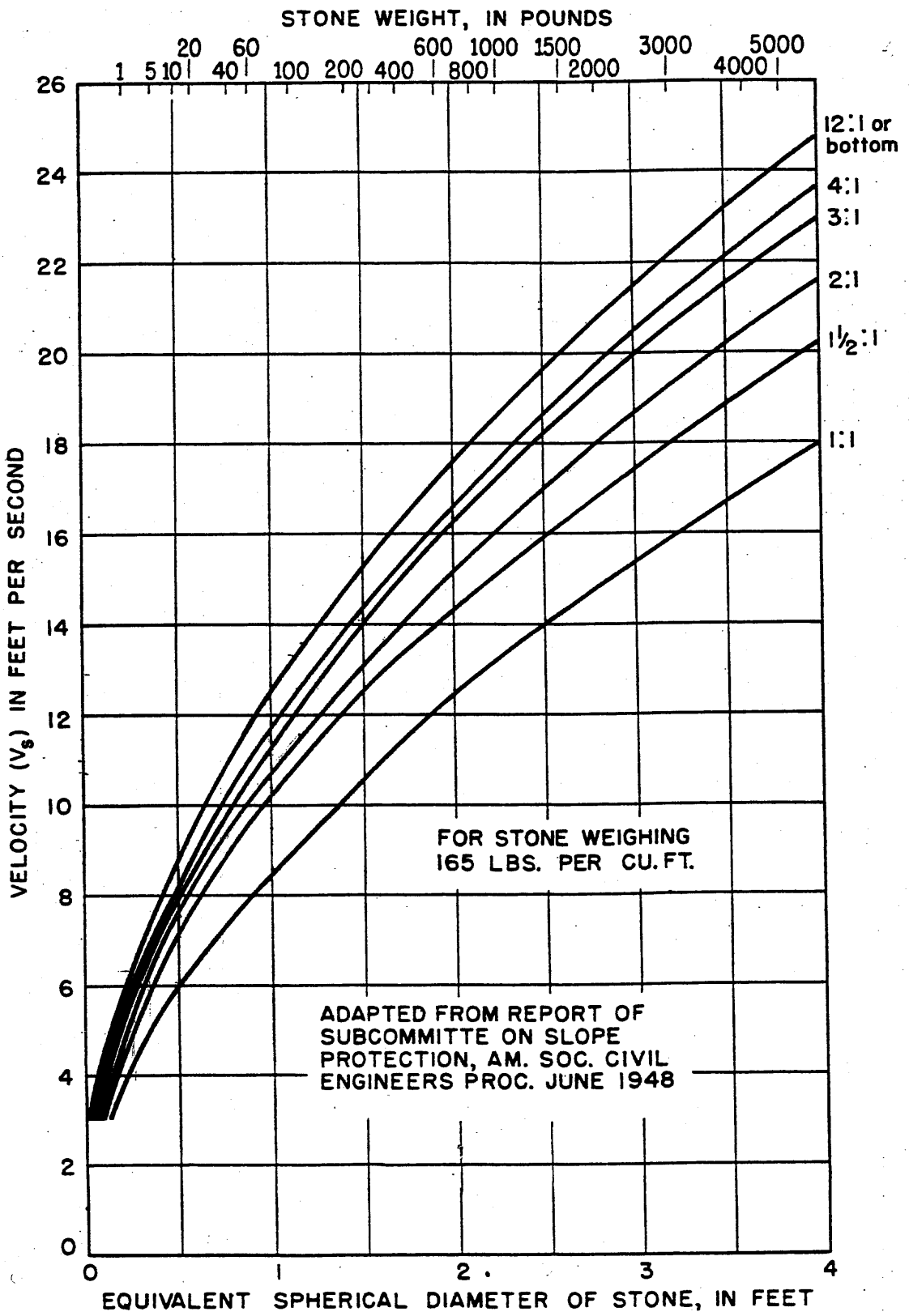

FIG. 2-SIZE OF STONE THAT WILL RESIST DISPLACEMENT FOR VARIOUS VELOCITIES AND SIDE SLOPES

Searcy, J.K. 1967. Use of Riprap for Bank Protection. U.S. Dept. of Transportation, Bureau of Public Roads, U.S Government Printing Office, Washington D.C.

— Culvert Design —

PCUC-1

All of PCWS-2 will flow into this culvert

$$Q_{10-6} = 0.49 \text{ cfs}$$

The inlet capacity using the nomograph on page 30 indicates a minimum culvert size less than 12"

To minimize the chance of clogging an 18" culvert should be used. Minimum inlet capacity of 5.5 cfs.

Check culvert capacity.

18" CMP
Slope = 7.9 %

Max. depth = 0.18'
Discharge velocity = 4.07 fps
No Riprap required at culvert outlet.

See pg 26 for calculation sheet.

PCUC-2

Contributing Watershed: PCWS-3

$$Q_{10-6} = 6.33 \text{ cfs}$$

The inlet capacity nomograph on page 30 indicates a 21" culvert could handle the design flow.

To add a factor of safety a 24" CMP should be used. Minimum inlet capacity 11 cfs

Check culvert capacity

24" CMP
Slope = 10.7 %

See page 27 for calculation sheet

max depth = 0.54 ft
Discharge velocity = 9.31
outlet riprap required.

Assuming 2:1 side slopes in the channel where the culvert outlets a $D_{50} = 12"$ riprap will resist displacement and dissipate energy. $D_{50} = 12"$ riprap should extend 15' below the culvert.

see pg 22 for riprap figure.

PCUC-3

All of PCWS-4 will flow into this culvert.

$Q_{10-6} = 19.05$ cfs

The inlet capacity using the nomograph on page 30 indicates a minimum culvert size of 27"

To minimize the chance of clogging and to provide some extra capacity use a 36" culvert which has an inlet capacity of over 30 cfs

Check culvert capacity

36" CMP
Slope = 2.5 %

See page 28 for calculation sheet.

max. depth = 1.2' < 3' ok
Discharge velocity = 7.27 fps
Riprap required
Use D_{50} = 6" Riprap at the outlet

Mine Water Discharge Culvert

Flow up to 300 gpm = 0.7 cfs

Water will be pumped out of the mine. Therefore, inlet capacity is not an issue.

Check Culvert Capacity 6" HDPE Culvert.

Slope = 35'/134' = 28.2%

max depth = 0.17' < 0.5' ∴ ok
Discharge velocity = 11.75 fps Outlet protection required

Place D_{50} = 15" at the culvert outlet

revised 1-05

PCUC-1
Worksheet for Circular Channel

Project Description	
Worksheet	Pace Canyon P
Flow Element	Circular Channe
Method	Manning's Form
Solve For	Channel Depth

Input Data		
Mannings Coeffic	0.024	CMP
Slope	0.079000	ft/ft
Diameter	18	in
Discharge	0.49	cfs

Results		
Depth	0.18	ft
Flow Area	0.1	ft²
Wetted Perime	1.06	ft
Top Width	0.98	ft
Critical Depth	0.26	ft
Percent Full	12.0	%
Critical Slope	0.017527	ft/ft
Velocity	4.07	ft/s < 5.0 fps ∴ no riprap
Velocity Head	0.26	ft
Specific Energ	0.44	ft
Froude Numbe	2.05	
Maximum Disc	17.20	cfs
Discharge Full	15.99	cfs
Slope Full	0.000074	ft/ft
Flow Type	Supercritical	

© Haestad Methods, Inc.
EarthFax Engineering Inc
37 Brookside Road Waterbury, CT 06708 USA (203) 755-1666

PCUC-2
Worksheet for Circular Channel

Project Description	
Worksheet	PACE CANYON PORTAL
Flow Element	Circular Channel
Method	Manning's Formula
Solve For	Channel Depth

Input Data	
Mannings Coefficient	0.024
Slope	0.107000 ft/ft
Diameter	24 in
Discharge	6.33 cfs

Results	
Depth	0.54 ft
Flow Area	0.7 ft²
Wetted Perimeter	2.18 ft
Top Width	1.77 ft
Critical Depth	0.89 ft
Percent Full	26.9 %
Critical Slope	0.015967 ft/ft
Velocity	9.31 ft/s
Velocity Head	1.35 ft
Specific Energy	1.89 ft
Froude Number	2.65
Maximum Discharge	43.12 cfs
Discharge Full	40.08 cfs
Slope Full	0.002669 ft/ft
Flow Type	Supercritical

riprap required
Place $D_{50} = 12''$ at the culvert outlet

PCUC-3
Worksheet for Circular Channel

Project Description	
Worksheet	PACE CAYON PORTAL
Flow Element	Circular Channel
Method	Manning's Formula
Solve For	Channel Depth

Input Data		
Mannings Coefficient	0.024	
Slope	0.025000	ft/ft
Diameter	36	in
Discharge	19.05	cfs

Results		
Depth	1.19	ft < 3' ok
Flow Area	2.6	ft²
Wetted Perimeter	4.09	ft
Top Width	2.94	ft
Critical Depth	1.40	ft
Percent Full	39.8	%
Critical Slope	0.014132	ft/ft
Velocity	7.27	ft/s > 5 ∴ need riprap at outlet use $D_{50} = 6''$
Velocity Head	0.82	ft
Specific Energy	2.01	ft
Froude Number	1.36	
Maximum Discharge	61.45	cfs
Discharge Full	57.12	cfs
Slope Full	0.002781	ft/ft
Flow Type	Supercritical	

Mine Water Discharge Culvert
Worksheet for Circular Channel

Project Description	
Worksheet	Portal Canyon
Flow Element	Circular Channel
Method	Manning's Formula
Solve For	Channel Depth

Input Data		
Mannings Coefficient	0.014	HDPE Pipe
Slope	0.282000	ft/ft
Diameter	6	in
Discharge	0.70	cfs

Results		
Depth	0.17	ft
Flow Area	0.1	ft²
Wetted Perimeter	0.63	ft
Top Width	0.47	ft
Critical Depth	0.42	ft
Percent Full	34.3	%
Critical Slope	0.017186	ft/ft
Velocity	11.75	ft/s
Velocity Head	2.15	ft
Specific Energy	2.32	ft
Froude Number	5.85	
Maximum Discharge	2.98	cfs > 0.7 cfs ∴ OK
Discharge Full	2.77	cfs
Slope Full	0.018052	ft/ft
Flow Type	Supercritical	

outlet riprap required
Place D_{50} = 15 to 18" riprap at outlet

CHART 5

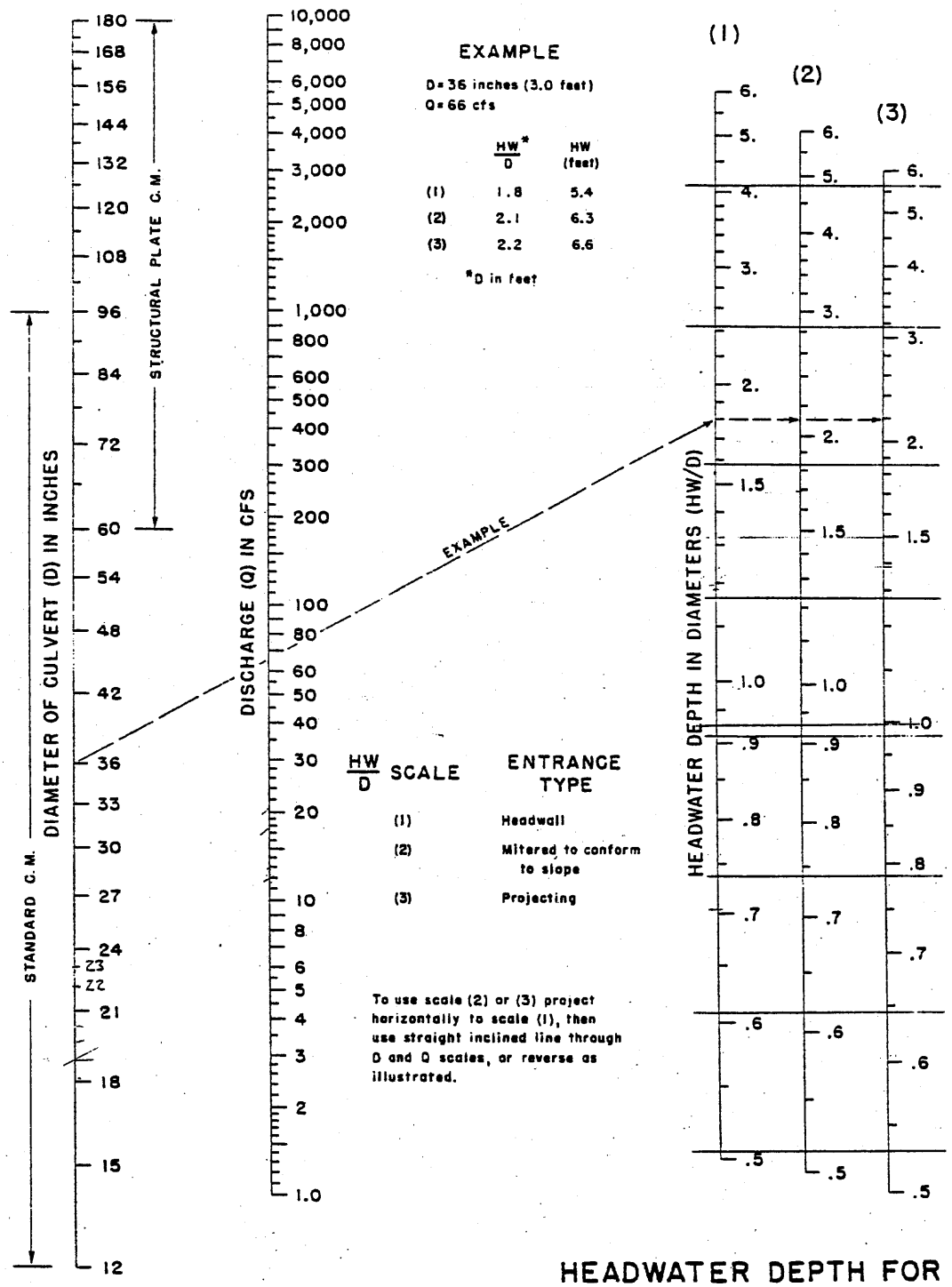

HEADWATER DEPTH FOR C. M. PIPE CULVERTS WITH INLET CONTROL

BUREAU OF PUBLIC ROADS JAN. 1963

Ref (U.S. Dept. of Transportation, 1977)

- Sediment Trap Design -

Sediment control at this site is being acheived using Alternate Sediment Control Measures (ASCM). These ASCMs include contemporaneous reclamation, clean gravel placed on pads and roads, silt fences (during construction) and a sediment trap.

The sediment trap is a part of the ASCM and is not intended to be a sediment pond. Thus, the sediment trap will not be designed as a sediment pond and will not have the capacity of a sediment pond.

The contemporaneous reclamation and gravel should adequately control sediment. The sediment trap will provide an extra measure of protection

Sediment Trap Capacity

elev.	Area (ft^2)	Volume (ft^3)	
6986	55.5		
6987	158.3	106.9	
6988	291.8	225.1	
6989	452.7	372.3	
6990	641.5	547.1	
6991	857	749.3	
6992	1098.8	977.9	spillway elevation
6993	1459.7	1279.3	
6993.5	1500	739.9	
		4997.8 ft^3 = 0.115 Ac-ft	

The runoff depth for the 10-yr 24-hr storm event is 0.66 inches. (see page 33)

Total runoff volume = $(0.66\,in/12\,in/ft)(2.94\,Ac)(43560\,ft^2/ac) = 5127.0\,ft^3$

The sediment trap can hold nearly all of the 10-yr 24-hr storm event if the spillway is plugged.

Although not required as it is for a sediment pond the sediment trap's spillway will be designed to pass the 25-yr 6-hr storm event.

$Q_{25-6} = 0.99$ cfs (see page 32)

revised 1-05

Triangular Hydrograph Calculations using

SCSHYDRO Program

Watershed I.D.:
PCWS-1 25-YEAR 6-HOUR

INPUT SUMMARY

STORM :	WATERSHED :
Dist.= SCS Type `b'	Area = 2.14 acres
Depth = 1.65 inches	CN = 83.00
Duration = 6.0 hrs	Time conc.= 0.04 hrs

OUTPUT SUMMARY

Runoff depth: 0.468 inches
Initial abstr: 0.410 inches
Peak flow: 0.99 cfs (0.457 iph)
at time: 2.505 hrs

Triangular Hydrograph Calculations using

SCSHYDRO Program

Watershed I.D.:
PCWS-1 10-YEAR 24-HOUR

INPUT SUMMARY

STORM :	WATERSHED :
Dist.= SCS Type II	Area = 1.93 acres
Depth = 1.95 inches	CN = 83.00
Duration = 24.0 hrs	Time conc.= 0.05 hrs

OUTPUT SUMMARY

Runoff depth: 0.661 inches
Initial abstr: 0.410 inches
Peak flow: 1.42 cfs (0.729 iph)
at time: 12.006 hrs

Spillway Design, (PCDC-1)

Q_{25-6} = 0.99 cfs
Use an 18" CMP.

Inlet capacity = 5.5 cfs (pg 30)

Slope = 8/33 = 24.2 %

Outlet Velocity = 7.44 fps

Requires Riprap Use D_{50} = 6" for outlet protection

SEDIMENT TRAP SPILLWAY DESIGN
Worksheet for Circular Channel

Project Description	
Worksheet	Pace Canyon P
Flow Element	Circular Channe
Method	Manning's Form
Solve For	Channel Depth

Input Data		
Mannings Coeffic	0.024	CMP
Slope	242000	ft/ft
Diameter	18	in
Discharge	0.99	cfs

Results		
Depth	0.19	ft
Flow Area	0.1	ft²
Wetted Perime	1.10	ft
Top Width	1.00	ft
Critical Depth	0.37	ft
Percent Full	12.9	%
Critical Slope	0.016790	ft/ft
Velocity	7.44	ft/s
Velocity Head	0.86	ft
Specific Energ	1.05	ft
Froude Numbe	3.61	
Maximum Disc	30.11	cfs
Discharge Full	27.99	cfs
Slope Full	0.000303	ft/ft
Flow Type	Supercritical	

> 5 fps ∴ riprap is required
use $D_{50} = 6''$

© Haestad Methods, Inc.
EarthFax Engineering Inc
37 Brookside Road Waterbury, CT 06708 USA (203) 755-1666

- Topsoil Stockpiles Sediment Control -

A berm will be constructed around the topsoil stockpiles to contain all runoff from the topsoil stockpiles. The berm will be designed to completely contain the runoff from the 10-yr 24-hr storm event.

Rainfall depth = 1.95" (10-yr 24-hr)

Although the topsoil stockpiles will be revegetated a bare earth condition will be assumed for runoff calculations. A Hydrologic soil group of D will be assumed.

CN = 89 (Dirt Road)

$$\text{Runoff depth} = \frac{(P - 0.2S)^2}{P + 0.8(S)}$$

$$S = 1000/CN - 10 = \frac{1000}{89} - 10 = 1.236$$

$$\text{Runoff depth} = \frac{(1.95 - 0.2(1.236))^2}{1.95 + 0.8(1.236)} = \frac{2.8995}{2.9388} = 0.99''$$

<u>Shaft Topsoil stockpile</u>

Topsoil stockpile area above shaft = 5193 ft²

Runoff Volume = (5193 ft²)(0.99/12) = 428.4 ft³

$$\text{Area} = \overset{A}{(2.7)(3.3)} + \overset{B}{2(\tfrac{1}{2}(2.7 \times 2.7))} + \overset{C}{\tfrac{1}{2}(3 \times 0.3)} + \overset{D}{\tfrac{1}{2}(0.3 \times 0.3)} = 16.7 \text{ ft}^2$$

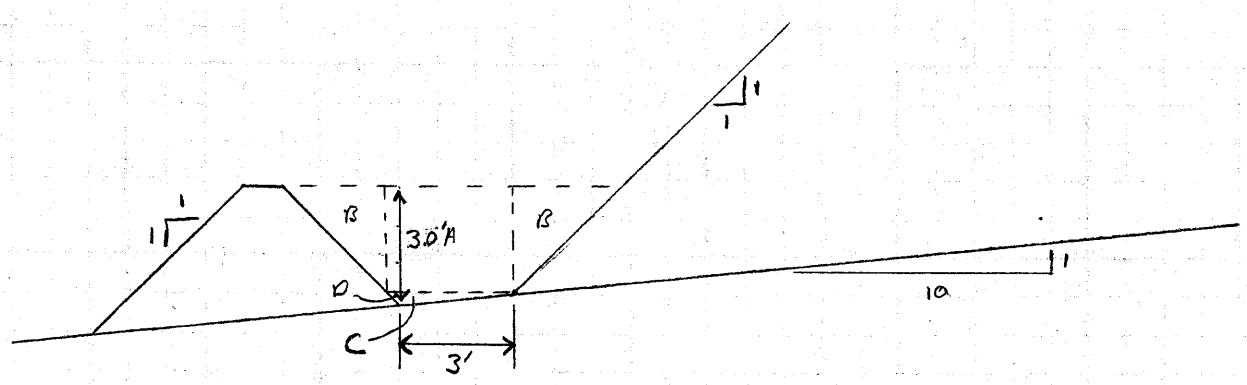

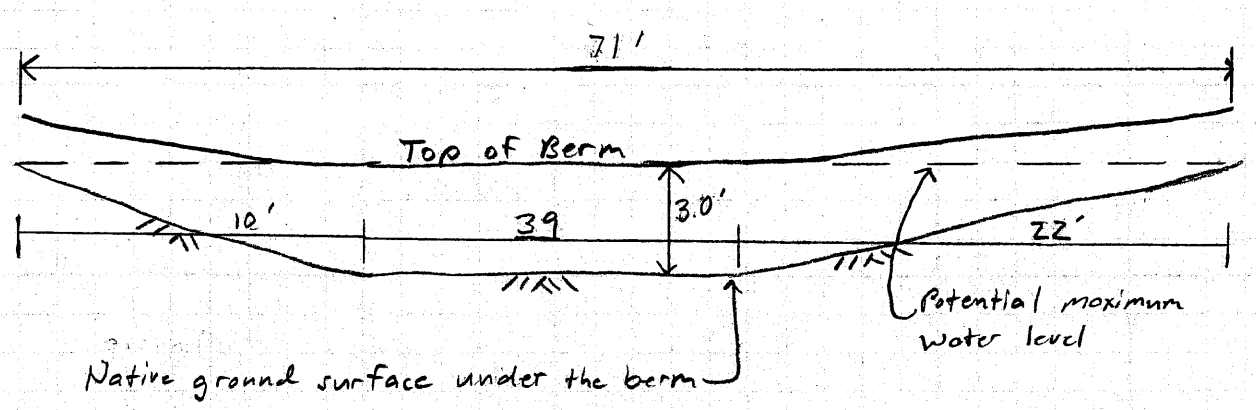

Berm length retaining runoff = 71'

Containment Volume = $(16.7\ ft^2)(39) + \frac{1}{2}(10')(16.7\ ft^2) + \frac{1}{2}(22)(16.7\ ft^2)$

$= 651.7 + 83.5 + 183.7 = 918.2\ ft^3$

Required containment = $428.4\ ft^3 < 918.2\ ft^3$ ∴ OK

A 3.0' tall berm should be constructed on the lower part of topsoil stockpile. The berm along the road and in the higher areas only needs to be about 1' tall.

<u>Portal Topsoil Stockpile</u>

Stockpile Area = 3928 ft^2

Runoff volume = $(3928\ ft^2)(0.99/12) = 324.1\ ft^3$

Area = $(2.7)(2) + 2(\frac{1}{2}(2.7 \times 2.7)) + \frac{1}{2}(0.3 \times 2) + \frac{1}{2}(0.3 \times 0.3) = 13.0\ ft^2$

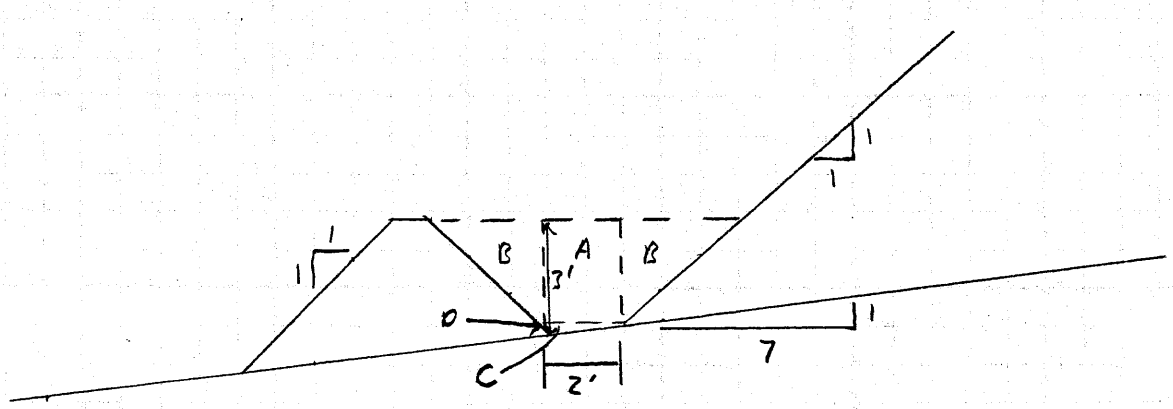

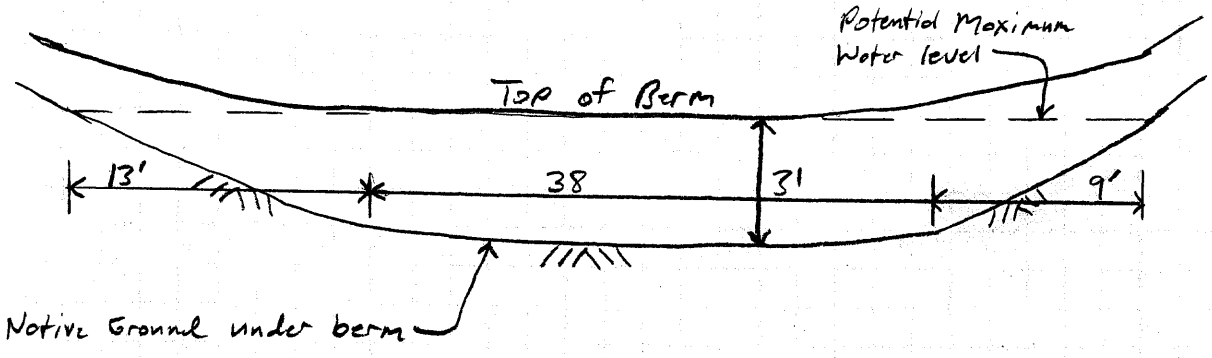

Containment Vol. = $(13.0)(38) + \frac{1}{2}(13)(13.0) + \frac{1}{2}(9)(13) = 637\ ft^3$

Required containment vol = $324.1\ ft^3 < 637\ ft^3$ ∴ ok

APPENDIX 7-12
ATTACHMENT 2

Alternate Sediment Control Calculations

REGISTERED PROFESSIONAL ENGINEER
2-4-05
No. 189797
LAYNE D.
JENSEN
STATE OF UTAH

Comparison of Pre-Mining, Operational and Post-Reclamation Sediment Yields for the Pace Canyon Fan Site

Sediment control during the operational phase and after reclamation will be by Alternate Sediment Control Measures ("ASCM"). Sediment control during the operational phase will be a blend of contemporaneous reclamation, covering pad areas with gravel, reseeding areas and a sediment trap. The ASCM used successfully for the reclamation of many sites will be used for the reclamation of this site. The reclamation sediment control methods to be applied at this site are as follows:

1. Deep gouging;
2. Mixing hay into the soil;
3. Mulching the gouged surface;
4. Securing the mulch with a tackifier; and
5. Revegetation.

The purpose of this calculation is to evaluate the sediment yield characteristics of the disturbed area under pre-mining, operational and post-mining conditions. The four conditions to be evaluated will be as follows:

1. Pre-mining, This site was disturbed by previous logging, mining and grazing access activities. The site has been disturbed for nearly 100 years. Hence pre-disturbance information is not available and the pre-mining condition is a disturbed condition. Although the pre-mining condition is a disturbed condition where possible an undisturbed condition will be assumed for these calculations.

2. Operational, after the site is constructed and ASCM have been installed. The sediment trap will not be accounted for in this calculation.

3. Immediate Post-Reclamation, after deep gouging, mulching and seeding but before vegetation establishment.

4. Long Term Post-Reclamation, after vegetation is well established and depressions from deep gouging are mostly gone.

During the operational phase 2 inches of washed gravel (2" minus) will be placed on the flatter portions of the pad area. The steeper areas around the portal will be covered with riprap. Areas disturbed by construction with slopes at 2:1 or less and that will not be impacted by operational activities will reclaimed using the same methods as for final reclamation. Areas with a slope greater than 2:1 or which may be disturbed during operations will be mulched and hydroseeded. The topsoil stockpile will be gouged and hydroseeded but will not generate any sediment since the stockpile will be surrounded by a berm that will completely contain all runoff and sediment. See Plate 7-5A to see where the various ASCM are being used.

Contemporaneous and final reclamation consists of mixing 2 tons/acre hay into the soil during deep gouging. Another 1 to 1.5 tons/acre of straw mulch will be broadcast on the surface. The straw mulch will be secured with a tackifier when the site is hydroseeded. A small amount of wood fiber mulch will also be applied with the tackifier during hydroseeding.

Since all three time periods contain a road none of the calculations will include sediment yield from the road.

Methodology

Sediment yield calculations will be made using the Modified Universal Soil Loss Equation ("MUSLE") as presented by Israelsen et. al. (1984) and Barfield et. al. (1994)

$$A = R*K*LS*VM$$

where:

A = Sediment Yield (tons/acre/year)
R = Rainfall Factor
K = Soil Erodibility Factor
LS = Length and Steepness of slope factor
VM = Erosion Control Factor

Each of the above factors will be evaluated for each of the three conditions.

Rainfall Factor (R)

R=15 From Map R7 Israelsen et. al. (1984)

The same factor will apply for all four conditions.

Soil Erodibility Factor (K)

As mentioned above the site has been disturbed for a long time and pre-disturbance data are not available. The Soil Survey of Carbon Area, Utah catagorizes soils in the vicinity of the site that were not disturbed at the time of the survey. The bottom of the canyon with relatively flat slopes are identified as map unit 96 Rock outcrop-Rubbleland-Travesilla Complex. The erodibility factor identified in Table 12 on page 279 is 0.10 for the surface sample and 0.37 for soils at a depth greater than 3 inches. Since the surface and subsoils have been mixed at the site I will assume a soil erodibility factor of 0.3 for all conditions since the same soil will be used during contemporaneous and final reclamation.

The soil erodibility factor for graveled surface will be assumed to be 0.05 for the operational period.

Length-Steepness Factor (LS)

$$LS = \left[\frac{65.41\,s^2}{s^2+10{,}000} + \frac{4.56\,s}{\sqrt{s^2+10{,}000}} + 0.065\right]\left(\frac{l}{72.6}\right)^m$$

Where:

LS = Length Steepness Factor
S = Slope Gradient (%)
l = Slope Length (ft)
m = empirical exponent (function of slope)

Pre-mining

Based on the undisturbed topography in the vicinity of the site the natural slopes range between 40% and nearly vertical on the rock outcrops. Since this is the baseline for comparison of the sediment yield during each condition I will assume a slope of 40% to be conservative. In an undisturbed condition the slopes extend unbroken from the ridge lines down to the channels in the canyons. These distances may be thousands of feet. However, this site is between two drainages and the maximum slope length is about 800' with an average slope length of 400' to 500'. For the undisturbed condition I will assume a slope of 40% and a slope length of 400'.

LS = 25.3 (Table 2 Israelsen et. al. (1984))

Operational Period

A different LS factor will be used for the different conditions at the site. The undisturbed areas will use the same LS factor as above (LS=25.3). The graveled and riprapped areas of the site have a conservative slope length of 400' and an average slope of about 12.5%

LS = 3.84 (Table 2 Israelsen et. al. (1984))

For the areas to be reseeded but not gouged I will assume the worst case which is the 1:1 slope above the fan with a slope length of 40 feet.

LS = 26.72 (Table 2 Israelsen et. al. (1984))

The LS factor for the reclaimed areas will be the same as determined for the reclaimed condition below.

Immediate Post Reclamation

The reclaimed areas will be deep gouged prior to seeding. Deep gouging creates 1 to 3' deep holes that prevent runoff from concentrating and achieving an erosive velocity. In the early

stages of reclamation the gouges prevent any water from running off the reclaimed areas. The gouges also stop any runoff from upgradient undisturbed areas. Therefore, the slope length is very short. I will assume a slope length of 10' although the distance is actually less. The maximum slope of reclamation is a 2:1 slope or 50%. I will assume the maximum slope of 50% and a slope length of 10'.

LS = 5.64 (Table 2 Israelsen et. al. (1984))

Long-term Post Reclamation

In the long term the depressions from gouging will disappear leaving an unbroken slope with a maximum slope of 50%. However, most of the reclaimed site will have slope much lower than 50%. I will assume a 35% slope and the same slope length as for the pre-mining condition (400').

LS = 20.44 (Table 2 Israelsen et. al. (1984))

Erosion Control Factor (VM)

Pre-Mining

A vegetation study was performed for this site. The following are the results of the vegetation study. I will use the these values to estimate the Erosion Control Factor.

Total vegetation cover = 52.5%
Litter/rock cover = 33.84%
Bare soil = 21.5%

Grass density = 4.4%
Forbs = 18.0%
Shrubs = 22.3%
Overstory (trees) = 7.8%
Canopy of tall weeds (shrubs plus trees) = 30.1%

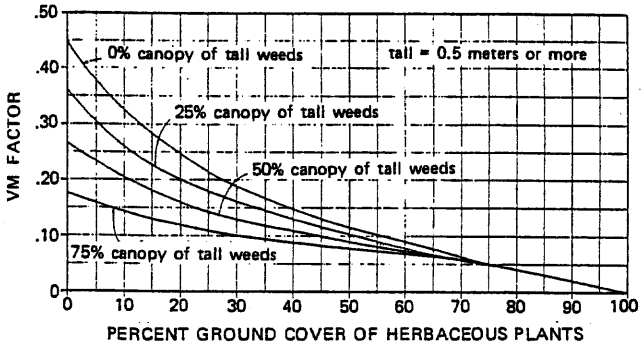

Figure 8. Relationship between forb density and VM factor.

Israelsen et. al. (1984)

VM = 0.2

Operational

The undisturbed areas will use the same value as for the pre-mining condition.

The gravel placed on the site will be like a stone mulch. Figure 6 from Israelsen et. al. (1984) estimates the VM based on R*K*LS and the tons/acre of stone mulch. The gravel is to be placed 2 inches thick. I will assume a density to 115 lbs/ cubic foot.

(2"/12 in/ft)(43560 ft^2/acre)(115 lbs/cubic foot)/(2000 lbs/cubic foot) = 417.5 tons/acre

R * K * LS = 15*0.3*3.84 = 17.3

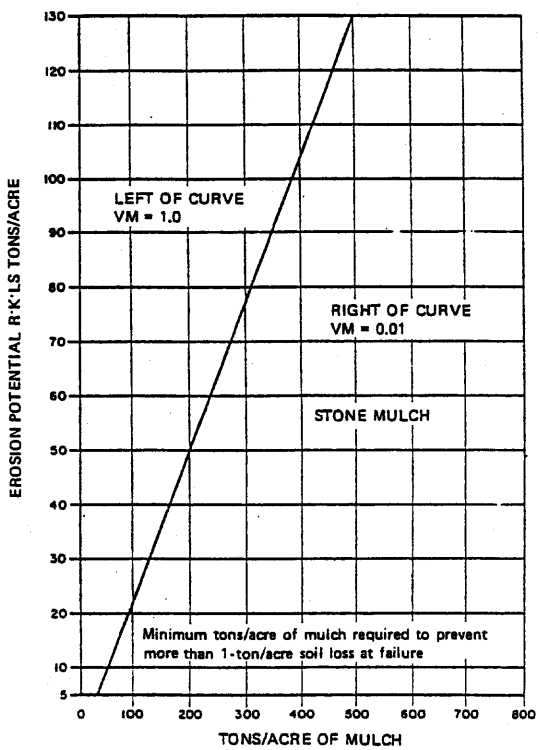

Figure 6. Stone mulch vs. R·K·LS.

VM = 0.01

The reseeded areas will likely not have very good vegetation. However, the native soil is very rocky. This rocky surface will reduce the erosion. Table 3 in Israelsen et. al. (1984) gives a range of values for scraped soil between 0.66 and 1.30. Due to the rock content in the soil and some limited vegetation I will assume a VM = 0.9

Immediate Post Reclamation

$$R * K * LS = 15*0.3*5.64 = 25.38$$

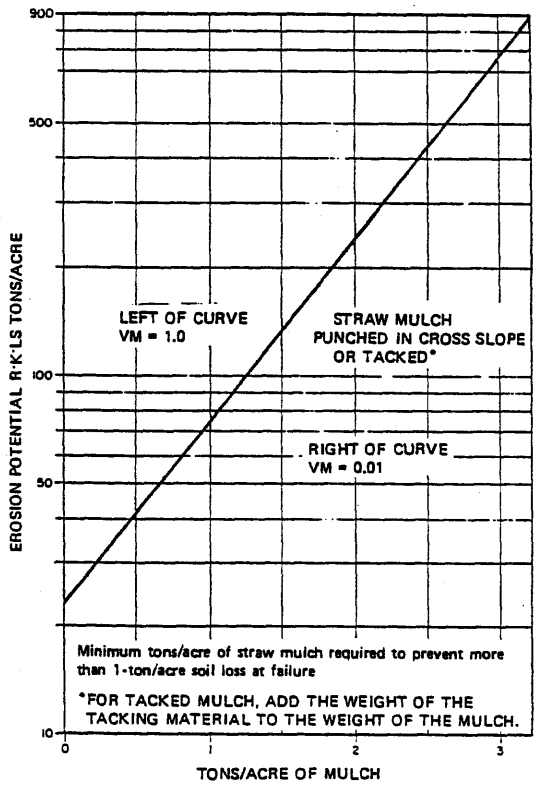

Figure 4. Straw mulch anchored vs. R·K·LS.

At least 1 ton/acre of mulch will be added with a tackifier to the reclaimed surface. Therefore, the point plots on the right side of the line.

$$VM = 0.01$$

Long-term Post Reclamation

I will assume the same vegetation as for the pre-mining condition.

VM = 0.2 (see figure 8 on page 5)

Calculation Summary

Time Period	R	K	LS	VM	A (tons/acre/yr)	Area (acre)	tons/yr
Pre-Mining	15	0.30	25.3	0.20	22.77	2.70	61.48
Operational							
undisturbed	15	0.30	25.3	0.20	22.77	1.34	30.51
gravel/riprap	15	0.05	3.84	0.01	0.03	0.69	0.02
revegetated	15	0.30	26.72	0.90	108.22	0.16	17.32
reclaimed	15	0.30	5.64	0.01	0.12	0.30	0.04
					Operational Total	2.49	47.89
Immediate Post Reclamation	15	0.30	5.64	0.01	0.12	2.70	0.32
Long-term Post Reclamation	15	0.30	20.44	0.20	18.40	2.70	49.68

The area in the above table for the pre-mining and reclamation conditions is the area inside the disturbed area boundary. The operational areas do not add up to the total area inside the disturbed area boundary because the area within the topsoil stockpile berm has been removed. The topsoil stockpile is surrounded by a total containment berm and no runoff and sediment will leave this area.

As can be seen above the operational and reclaimed surfaces will generate less sediment than the pre-mining condition. The sediment trap will further reduce the sediment load reaching the creek during the operational period.

revised 1-05

APPENDIX 7-12
ATTACHMENT 3

Reclamation Hydrology Calculations

REGISTERED PROFESSIONAL ENGINEER
2-4-05
No. 189797
LAYNE D.
JENSEN
STATE OF UTAH

Reclamation Channels

The curve numbers identified on pages 1+2 of Attachment 1 for undisturbed and reclaimed areas will be used for estimating peak flows for each reclamation channel.

A summary of the watershed characteristics can be seen on the following page.

The channel design methodology can be found on pg 10 of the operational hydrology calculations in Attachment 1.

PCRD-1

Contributing watershed is PCRWS-2

$Q_{10\text{-}6} = 6.36$ cfs (pg 5)

minimum slope = 1/8.9 = 11.2 %

maximum slope = 1/2.95 = 33.9 %

Trapezoidal ditch

Side Slope = 2:1
Depth = 1'
Bottom Width = 2.5'
Riprap D_{50} = 6"

Max. Velocity = 6.7 fps
Max. Depth = 0.38'
freeboard = 0.62'

See pages 6+7 for calculation sheets
See page 10 for the figure.

Swale 1

Contributing watershed is PCRWS-1

Q_{10-6} = 19.05 cfs (pg 4)

Slope = 3.6%

Trapizoidal swale

Side slopes = 7.5:1
Depth = 1'
Bottom width = 5'
Riprap = 2" minus gravel

Max Velocity = 4.09 fps < 5 fps no riprap just gravel

max depth = 0.52' < 1' ok
freeboard = 0.48'

See page 7 for calculation sheet.
See page 11 for the figure.

Swale 2

Contributing watershed is PCRWS-2

Q_{10-6} = 6.36 cfs

Slope = 4.4%

Triangular swale

Side slopes = 7.5:1
Depth = 1'
Bottom Width = 0'
Riprap = 2" minus gravel

max velocity = 3.48 fps < 5' ∴ no riprap just gravel

max depth = 0.49'
freeboard = 0.51'

See page 8 for calculation sheet
See page 12 for figure.

Watershed Area a	Drainage Area (ac)	Curve Number	S (in)	Y (%)	l (ft)	L (hr)	Time of Conc. (hr)	Peak Flow (cfs)
PCRWS-1	149.8	80	2.500	57.7	4593	0.142	0.237	19.05
PCRWS-2	40.3	80	2.500	70.4	2477	0.078	0.131	6.36

Notes

Watershed locations can be found on Plate PC5-5 and PC7-7
S = 1000/CN - 10
Y = average watershed slope = (length of contour lines)(contour interval)/(watershed area)
l = hydraulic length
L = watershed lag =(l^0.8(S+1)^0.7) / (1900(Y)^0.5)
Time of Concentration + 1.67L
Peak Flow is based on a 10-yr 6-hr storm event (calculations can be found on pages 4 and 5)

Triangular Hydrograph Calculations using

SCSHYDRO Program

Watershed I.D.:
PCRWS-1

INPUT SUMMARY

STORM :	WATERSHED :
Dist.= SCS Type `b'	Area = 149.80 acres
Depth = 1.35 inches	CN = 80.00
Duration = 6.0 hrs	Time conc.= 0.24 hrs

OUTPUT SUMMARY

Runoff depth: 0.216 inches
Initial abstr: 0.500 inches
Peak flow: 19.05 cfs (0.126 iph)
at time: 2.623 hrs

Triangular Hydrograph Calculations using

SCSHYDRO Program

Watershed I.D.:
PCRWS-2

INPUT SUMMARY

STORM :	WATERSHED :
Dist.= SCS Type `b'	Area = 40.30 acres
Depth = 1.35 inches	CN = 80.00
Duration = 6.0 hrs	Time conc.= 0.13 hrs

OUTPUT SUMMARY

Runoff depth: 0.216 inches
Initial abstr: 0.500 inches
Peak flow: 6.36 cfs (0.157 iph)
at time: 2.550 hrs

PCRD-1 MIN SLOPE
Worksheet for Trapezoidal Channel

Project Description	
Worksheet	PORTAL CANYON RECLAMATION
Flow Element	Trapezoidal Channel
Method	Manning's Formula
Solve For	Channel Depth

Input Data		
Mannings Coefficient	0.043	$D_{50} = 6''$
Slope	0.112000	ft/ft
Left Side Slope	2.00	H : V
Right Side Slope	2.00	H : V
Bottom Width	2.50	ft
Discharge	6.36	cfs

Results		
Depth	0.38 ft	< 1.0' ∴ ok
Flow Area	1.2	ft²
Wetted Perimeter	4.20	ft
Top Width	4.02	ft
Critical Depth	0.51	ft
Critical Slope	0.039000	ft/ft
Velocity	5.14	ft/s
Velocity Head	0.41	ft
Specific Energy	0.79	ft
Froude Number	1.63	
Flow Type	Supercritical	

PCRD-1 MAX SLOPE
Worksheet for Trapezoidal Channel

Project Description	
Worksheet	PORTAL CANYON RECLAMATION
Flow Element	Trapezoidal Channel
Method	Manning's Formula
Solve For	Channel Depth

Input Data		
Mannings Coefficient	0.051	D_{50} = 6" Slope = 33.9 %
Slope	0.339000 ft/ft	
Left Side Slope	2.00 H : V	
Right Side Slope	2.00 H : V	
Bottom Width	2.50 ft	
Discharge	6.36 cfs	

Results	
Depth	0.31 ft
Flow Area	1.0 ft²
Wetted Perimeter	3.87 ft
Top Width	3.73 ft
Critical Depth	0.51 ft
Critical Slope	0.055375 ft/ft
Velocity	6.67 ft/s < 7.5 fps ∴ ok
Velocity Head	0.69 ft
Specific Energy	1.00 ft
Froude Number	2.32
Flow Type	Supercritical

Reclamation Swale-1
Worksheet for Trapezoidal Channel

Project Description	
Worksheet	Pace Canyon Reclamation
Flow Element	Trapezoidal Channel
Method	Manning's Formula
Solve For	Channel Depth

Input Data	
Mannings Coefficient	0.035
Slope	0.036000 ft/ft
Left Side Slope	7.50 H : V
Right Side Slope	7.50 H : V
Bottom Width	5.00 ft
Discharge	19.05 cfs

Results	
Depth	0.52 ft
Flow Area	4.7 ft²
Wetted Perimeter	12.91 ft
Top Width	12.84 ft
Critical Depth	0.58 ft
Critical Slope	0.024550 ft/ft
Velocity	4.09 ft/s
Velocity Head	0.26 ft
Specific Energy	0.78 ft
Froude Number	1.20
Flow Type	Supercritical

© Haestad Methods, Inc. 37 Brookside Road Waterbury, CT 06708 USA (203) 755-1666

Reclamation Swale-2
Worksheet for Trapezoidal Channel

Project Description	
Worksheet	Pace Canyon Reclamation
Flow Element	Trapezoidal Channel
Method	Manning's Formula
Solve For	Channel Depth

Input Data	
Mannings Coefficient	0.035
Slope	0.044000 ft/ft
Left Side Slope	7.50 H : V
Right Side Slope	7.50 H : V
Bottom Width	0.00 ft
Discharge	6.36 cfs

Results	
Depth	0.49 ft
Flow Area	1.8 ft²
Wetted Perimeter	7.47 ft
Top Width	7.40 ft
Critical Depth	0.54 ft
Critical Slope	0.027995 ft/ft
Velocity	3.48 ft/s
Velocity Head	0.19 ft
Specific Energy	0.68 ft
Froude Number	1.24
Flow Type	Supercritical

© Haestad Methods, Inc.
EarthFax Engineering Inc
37 Brookside Road Waterbury, CT 06708 USA (203) 755-1666

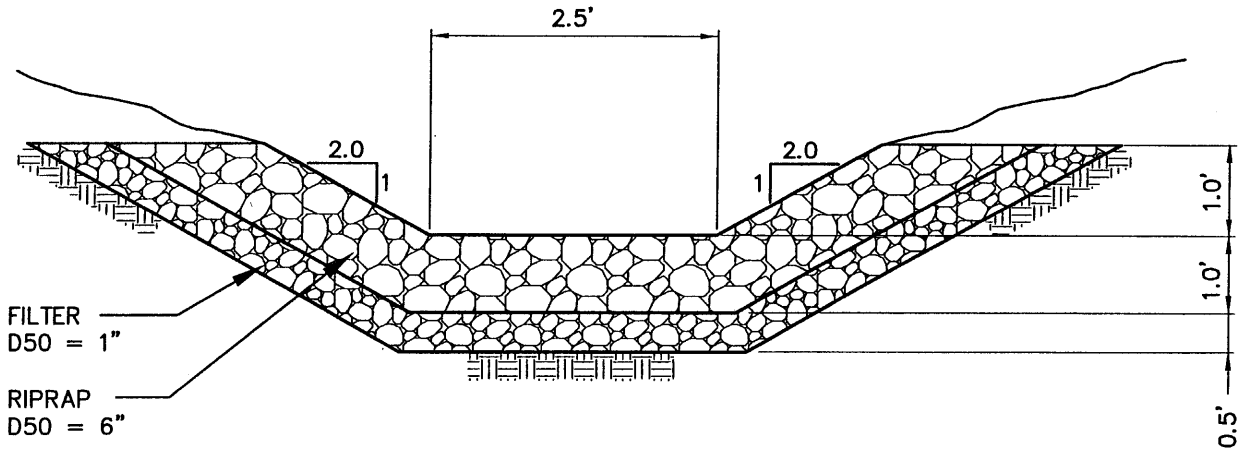

NO SCALE

PCRD–1

EarthFax

G:\UC801\07\HYDROLOGY\FIG-PCRD-1.DWG

10

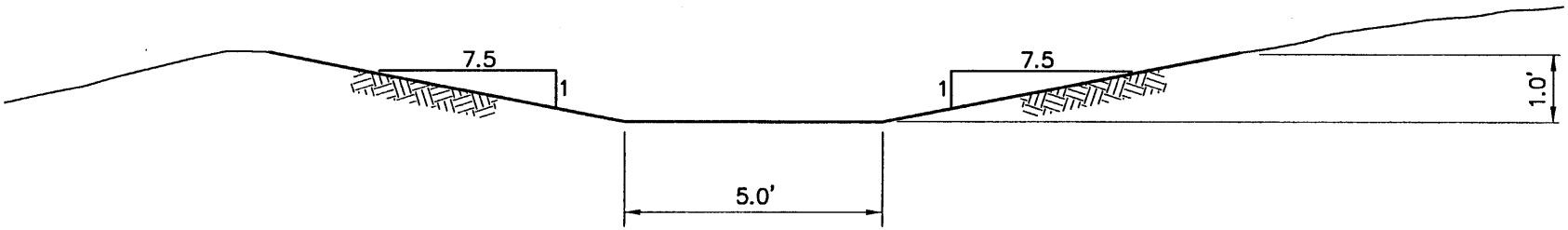

NO SCALE

RECLAMATION SWALE 1

EarthFax

G:\UCB01\07\HYDROLOGY\REC-SWALE 1.DWG

11

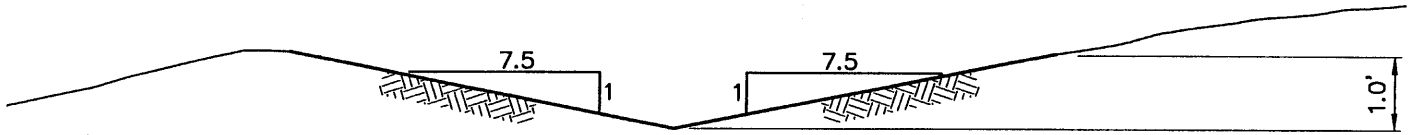

NO SCALE

RECLAMATION SWALE 2

EarthFax

G:\UC801\07\HYDROLOGY\REC-SWALE 2.DWG

12

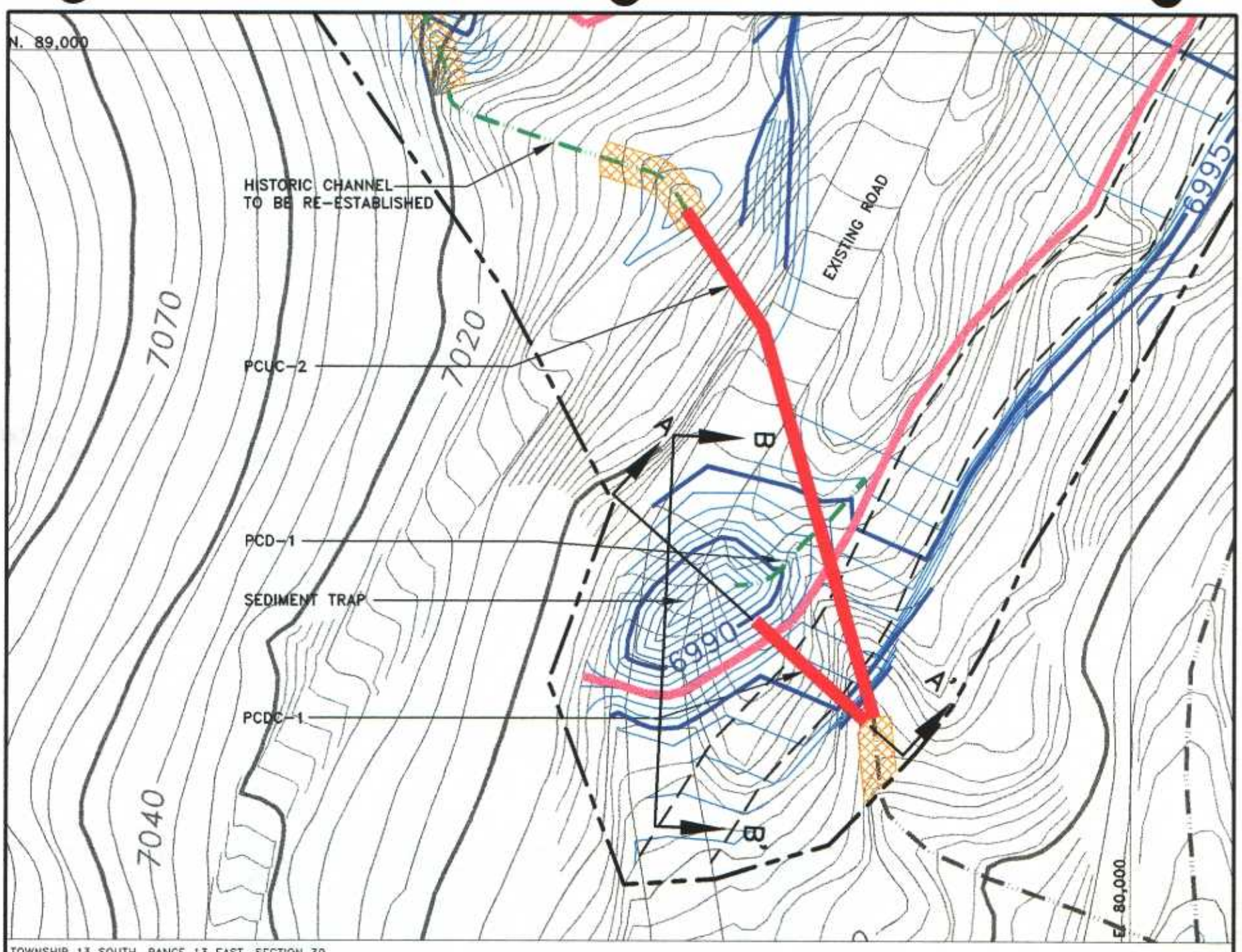

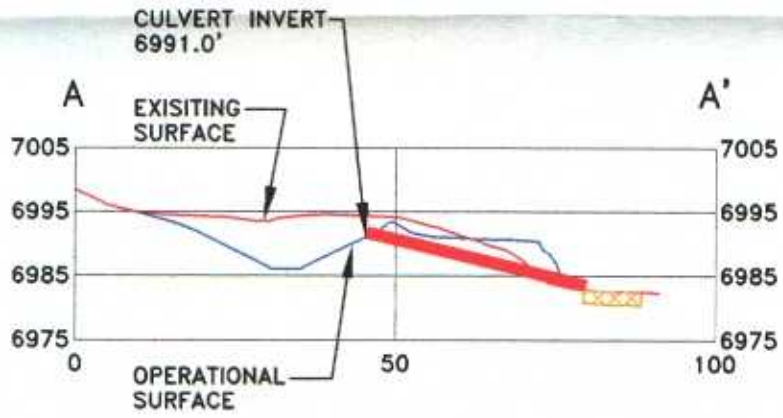

SECTION A–A'

HORZ: 1"=30'
VERT: 1"=30

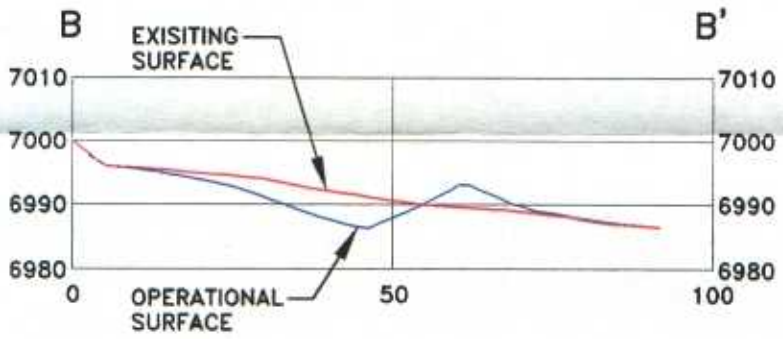

SECTION B–B'

HORZ: 1"=30'
VERT: 1"=30

LEGEND

CULVERT

RIPRAP

TOPOGRAPHY FROM OLYMPUS AERIAL SURVEYS INC.
FLOWN 08–12–04

REGISTERED PROFESSIONAL ENGINEER No. 180797 LAYNE D. JENSEN 4-28-05 STATE OF UTAH

REVISIONS OR UP-DATES			DATE: 12-13-04	
NO.	DATE	BY	DESIGNED BY:	LDJ
1	1-26-05	LDJ	DRAWN BY:	SWF
2	3-30-05	LDJ	CHECKED BY:	VSW
			SCALE:	1"=30'

FILENAME: Q:\UG001\12\DWG\PLATE7-4.DWG\12-13-04

Canyon Fuel Company, LLC
Dugout Canyon Mine

PACE CANYON FAN SEDIMENT TRAP DETAIL AND CROSS SECTIONS

P.O BOX 1029
WELLINGTON, UTAH 84542

DRAWING OR MAP NUMBER
PLATE PC7-4

EarthFax Engineering, Inc.

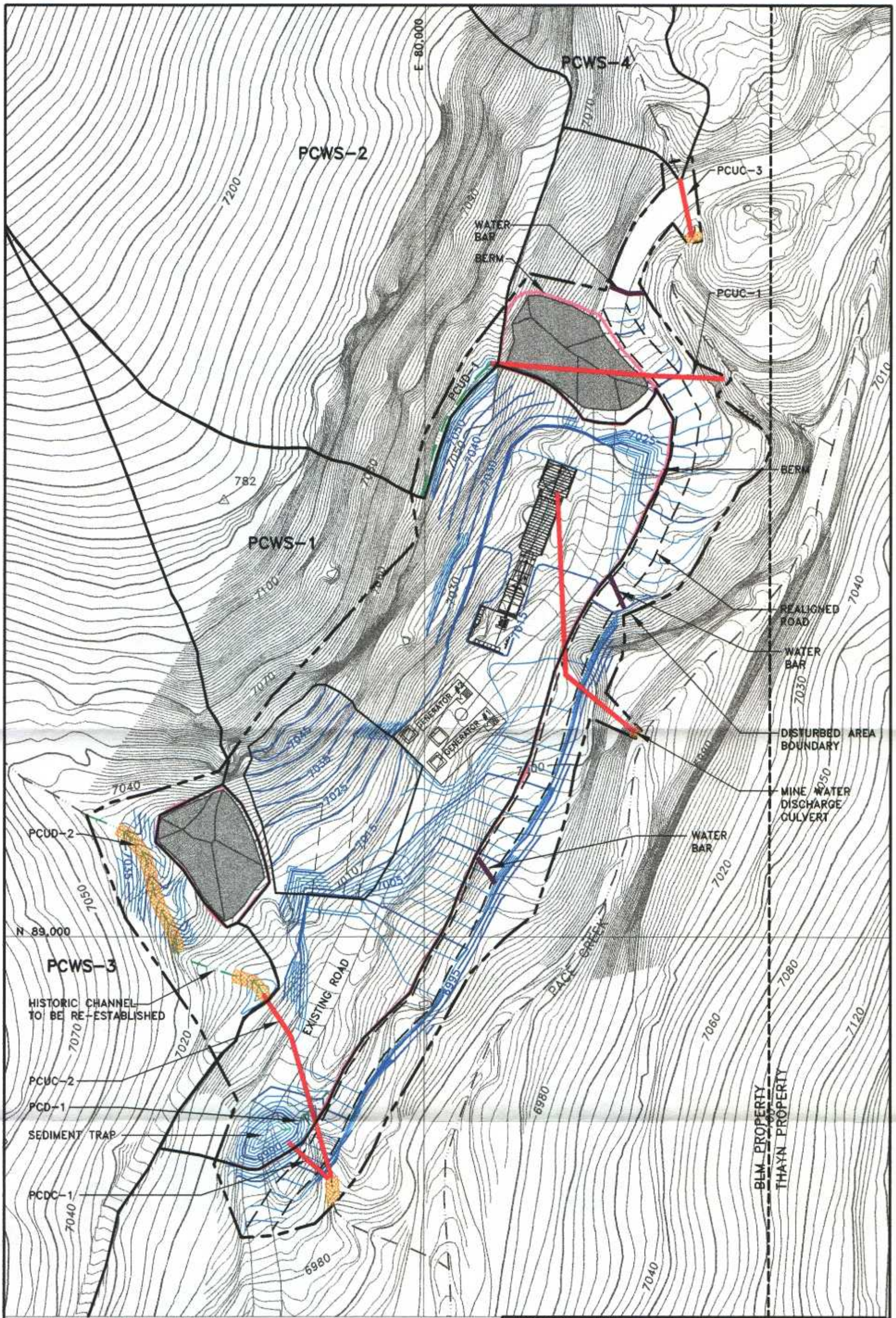

TOWNSHIP 13 SOUTH, RANGE 13 EAST, SECTION 30

LEGEND

- WATERSHED BOUNDARY
- CULVERT
- RIPRAP

TOPOGRAPHY FROM OLYMPUS AERIAL SURVEYS INC.
FLOWN 08-12-04

REGISTERED PROFESSIONAL ENGINEER No. 185777 LAYNE D. JENSEN STATE OF UTAH

REVISIONS OR UP-DATES		
NO.	DATE	BY
1	1-26-05	LDJ
2	3-30-05	LDJ

DATE:	11-16-04
DESIGNED BY:	LDJ
DRAWN BY:	SWT
CHECKED BY:	VSM
SCALE:	1"=60'

FILENAME: G:\JOBS\120_2003\PLATE7-5.DWG\11-16-04

Canyon Fuel Company, LLC
Dugout Canyon Mine

PACE CANYON FAN DISTURBED AREA DIVERSIONS

P.O BOX 1029
WELLINGTON, UTAH 84542

DRAWING OR MAP NUMBER
PLATE PC7-5

EarthFax Engineering, Inc.

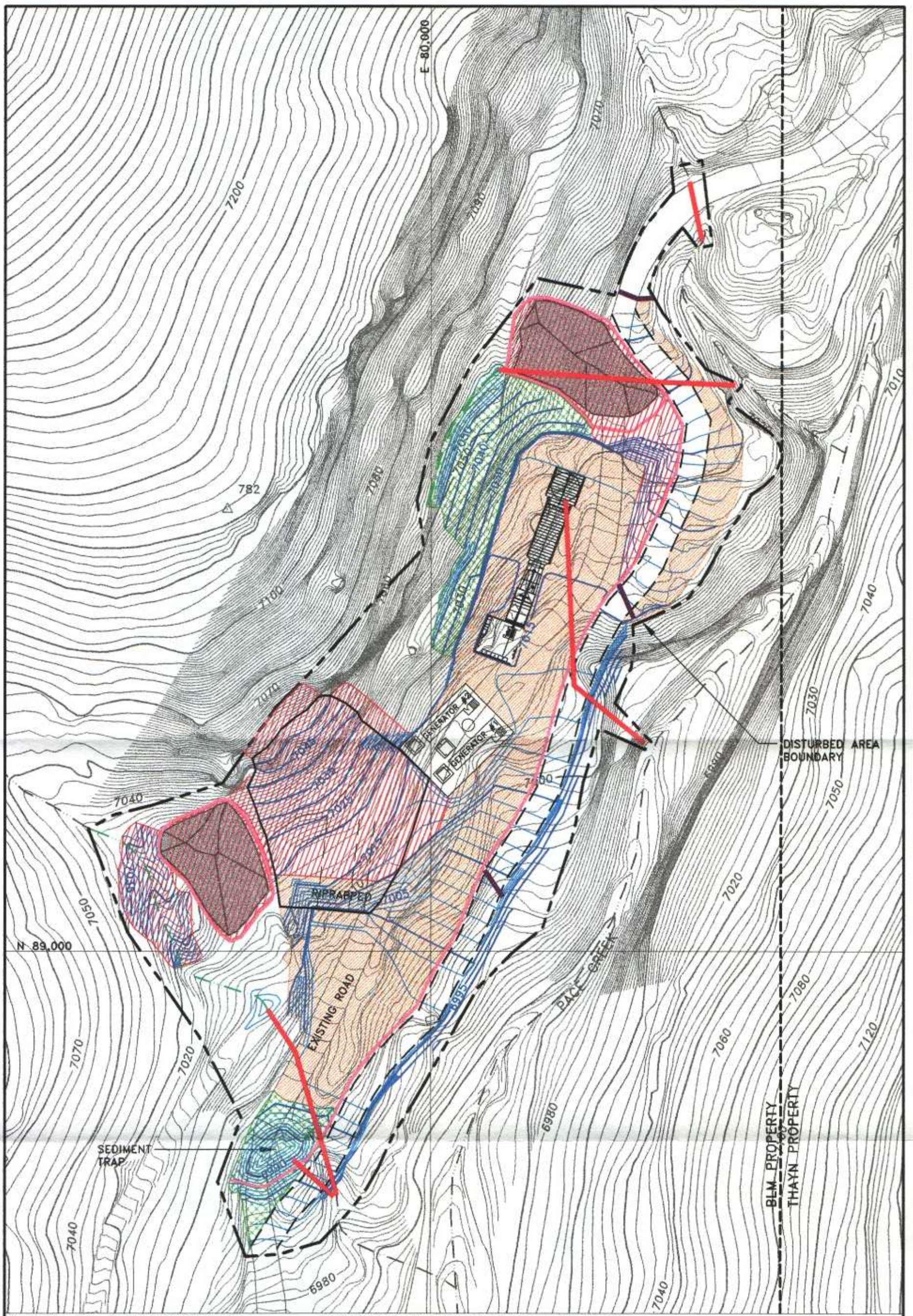

TOWNSHIP 13 SOUTH, RANGE 13 EAST, SECTION 30

TOPOGRAPHY FROM OLYMPUS AERIAL SURVEYS INC.
FLOWN 08-12-04

LEGEND

- AREAS TO BE DEEP GOUGED, MULCHED AND HYDROSEEDED
- AREAS TO BE MULCHED AND HYDROSEEDED
- GRAVEL OR RIPRAP
- CULVERT

REGISTERED PROFESSIONAL ENGINEER No. 159797 LAYNE D. JENSEN STATE OF UTAH

REVISIONS OR UP-DATES			DATE: 11-14-04	
NO.	DATE	BY	DESIGNED BY:	LDJ
1	1-26-05	LDJ	DRAWN BY:	SWF
2	3-30-05	LDJ	CHECKED BY:	VSM
			SCALE:	1"=80'

FILENAME: Q:\JOBS\125_DWG\PLATE7-5A.DWG\11-18-04

Canyon Fuel Company, LLC
Dugout Canyon Mine

PACE CANYON FAN SEDIMENT CONTROL MAP AND CONTEMPORANEOUS RECLAMATION TREATMENTS

P.O BOX 1029
WELLINGTON, UTAH 84542

DRAWING OR MAP NUMBER
PLATE PC7-5A

EarthFax Engineering, Inc.

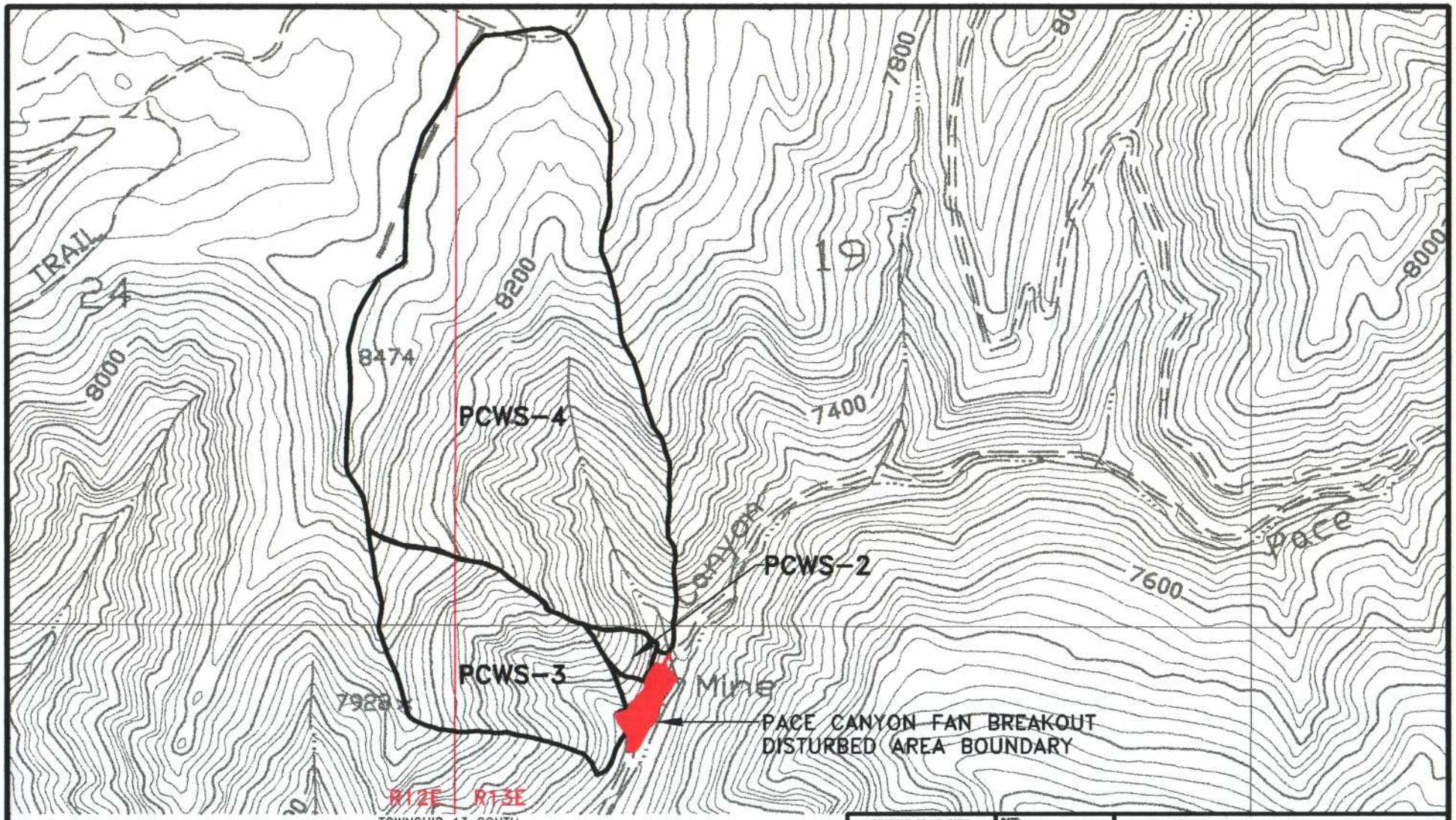

LEGEND

PACE CANYON UNDISTURBED WATERSHED BOUNDARY

REGISTERED PROFESSIONAL ENGINEER No. 189797 LAYNE D. JENSEN STATE OF UTAH

REVISIONS OR UP-DATES				
NO.	DATE	BY	DATE: 11-17-04	
1	1-25-05	LDJ	DESIGNED BY:	LDJ
			DRAWN BY:	SWF
			CHECKED BY:	VSM
			SCALE:	1"=1000'

FILENAME: G:\UC001\07\PERMIT DWG\PLATE7-6.DWG\11-21-04

Canyon Fuel Company, LLC
Dugout Canyon Mine

PACE CANYON FAN UNDISTURBED WATERSHED BOUNDARIES

P.O BOX 1029
WELLINGTON, UTAH 84542

DRAWING OR MAP NUMBER
PLATE PC7-6

EarthFax Engineering, Inc.

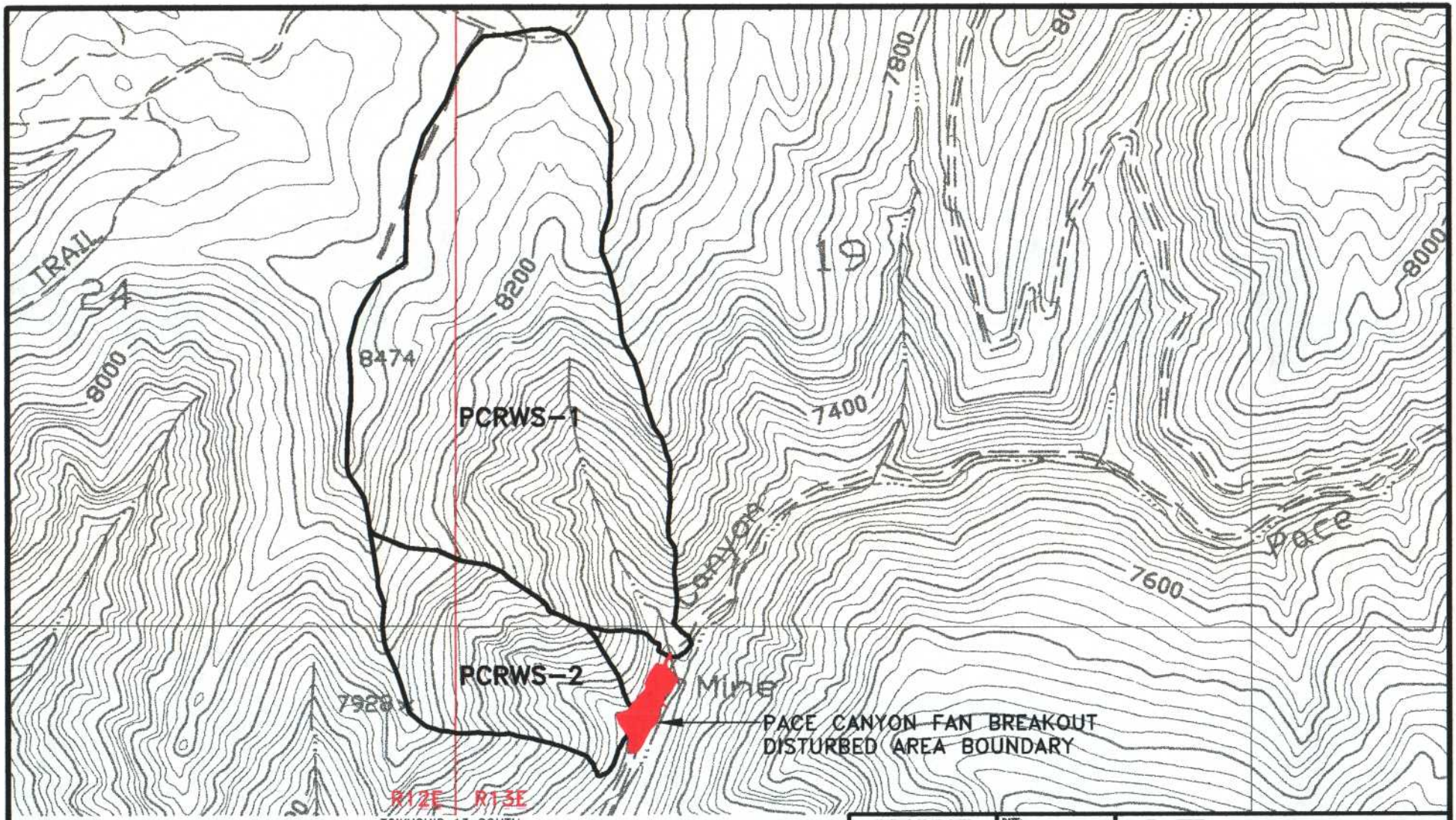

LEGEND

PACE CANYON RECLAMATION WATERSHED BOUNDARY

REGISTERED PROFESSIONAL ENGINEER
No. 188797
LAYNE D. JENSEN
STATE OF UTAH

REVISIONS OR UP-DATES				
NO.	DATE	BY	DATE: 11-17-04	
1	1-26-05	LDJ	DESIGNED BY:	LDJ
			DRAWN BY:	SWF
			CHECKED BY:	VSM
			SCALE:	1"=1000'

FILENAME: Q:\UC801\07\PERMIT DWG\PLATE7-7.DWG\11-21-04

Canyon Fuel Company, LLC
Dugout Canyon Mine

PACE CANYON FAN RECLAMATION WATERSHED BOUNDARIES

P.O BOX 1029
WELLINGTON, UTAH 84542

DRAWING OR MAP NUMBER
PLATE PC7-7

EarthFax Engineering, Inc.

CHAPTER 8

BONDING AND INSURANCE

CHAPTER 8
BONDING AND INSURANCE

810 BONDING DEFINITIONS AND DIVISION RESPONSIBILITIES

This chapter provides information regarding the bonding for coal mining and reclamation operations at the Dugout Canyon Mine. CFC will have on file with the Division a bond or bonds made payable to the Division for performance of all the requirements of the State Program.

820 REQUIREMENT TO FILE A BOND

The disturbed area (53.8 acres plus 2.7 Pace Canyon Fan Facility = 56.5) covered by the bond is outlined on Plates 5-2, RA 5-1 and PC 5-2 of this M&RP. The disturbed area and specific acres to be reclaimed are discussed in Section 340. The performance bond period is for the duration of the coal mining and reclamation operations including the extended period designated by the Division. The bond is in the form of a surety bond and is described in Section 860.

830 DETERMINATION OF BOND AMOUNT

The reclamation bond for the Dugout Canyon Mine is $2,400,000 (2007 dollars). The most current formulas from the Office of Surface Mining, *Handbook for Calculation of Reclamation Bond Amounts*, April 2000 were used to determine the coverage necessary for reclamation (Means, 2002). Additional details concerning the estimate can be found in Section 540, 550, and Appendix 5-6.

The present bond on file with the Division should be sufficient to cover the reclamation bond. However, if an adjustment in the bond coverage is necessary, the amount will be increased/decreased per the Division's requirements.