CHAPTER 2

SOILS

231.400 Construction, Modification, Use, and Maintenance of Topsoil Storage Piles

Topsoil and substitute topsoil removed from the Dugout Canyon Mine will be transported and stockpiled at the Soldier Canyon Mine soils stockpile area (Plate 2-3). The estimated volumes of topsoil and substitute topsoil to be stockpiled are presented in Table 2-2.

It is anticipated that the pile will be constructed in horizontal lifts of 1.5 to 2.0 feet. Tracked equipment will be used to reduce compaction. As described in Section 231.100, the stockpile will be graded to a maximum slope of 2:1 and seeded to promote surface stabilization. Some of the vegetation removed during the construction of the Dugout Canyon Mine will be incorporated into or placed on top of the stockpile. The interim reclamation seed mix described in Chapter 3 will be used for this purpose. Volume calculations for the amount of topsoil to be removed and placed in the storage pile are included in Appendix 2-6.

The Dugout Canyon Mine topsoil will be labeled and kept separate from the Soldier Canyon Mine soils. A description of the Soldier Canyon Mine topsoil stockpile area can be found in that M&RP. The Soldier Canyon Mine M&RP will be modified to allow for the storage of Dugout Canyon Mine substitute topsoil prior to the transport of the soil. The stockpiles will be isolated from the main surface area to protect the material from contaminants and unnecessary compaction that would interfere with vegetation. A sign will be installed at the base of each stockpile to identify it as a topsoil storage area. The stockpiles will be protected from wind and water erosion by being revegetated with a quick growing vegetative cover (proposed interim reclamation seed mix) and by installing berms and/or silt fence below the stockpiles to help trap sediment coming off the stockpile. These stockpiled soils will not be moved or disturbed until required for redistribution during final reclamation.

The topsoil/growth medium salvaged from the Pace Canyon fan portal site will be stockpiled at the site (Plate PC5-2). Approximately 3,192 cubic yards of topsoil will be stripped from the site and stored in two topsoil stockpiles. Topsoil volume calculations and topsoil stockpile design calculations can be found in Appendix 2-9. Plastic tape/ribbon will be placed atop native ground prior

to the placement of topsoil in the stockpile. The tape/ribbon will be placed in a grid pattern creating approximately four foot squares. Atop the material placed over the culvert and prior to the placement of the topsoil for storage, tape/ribbon will be placed in a zigzag pattern to identify the location of the culvert.

232 Topsoil and Subsoil Removal

232.100 Topsoil Removal and Segregation

All topsoil thicker than 6 inches will be removed as a separate layer from the subsoil, segregated, and stockpiled separately, if necessary. Topsoil less than 6 inches thick will be removed according to Section 232.300.

Soil from the Dugout Creek channel walls removed during culvert construction will be stored separately from soils removed from other areas within the disturbed area or within designated areas of the stockpile.

Soils salvaged during the construction of the small substation pad will be handled as described withing this chapter. The majority of the area designated for the pad has the soils salvaged during initial construction of the mine site. The potential area of additional disturbance is approximately 25 square feet. The slope remaining once the soil from the additional disturbance is salvaged will be restored to approximately 2:1 and then seeded with the interim seed mix.

If during construction activities additional topsoil is found, this material will be removed and stockpiled for use during reclamation activities. It is likely that material will be found in some areas marked on Plate 2-2 as OB.

As requested by the Division, a non-biased, third party, professional soil scientist will be on-site when available at the Dugout Canyon Mine facilities during soil salvage to monitor and supervise soil salvage operations for the purpose of maximizing soil salvage volumes and quantities.

pH
Electrical Conductivity (EC)
Saturation Percent
Calcium (soluble)
Magnesium (soluble)
Sodium (soluble)
Sodium Absorption Ratio (SAR)
Total Sulfur
Acid/Base Potential
Total Organic Carbon
Phosphate
Nitrogen (nitrate)
Boron
Selenium
Available Sodium
Exchangeable Sodium
Alkalinity
Total Kjeldahl Nitrogen
Water Holding Capacity
Percent Coarse Fragment, Sand, Silt, and Clay
Texture

The applicant will utilize the substitute topsoil for reclamation purposes only subsequent to approval by the Division.

Certification of Reclamation Topsoil Suitability. The suitability of the substitute topsoil will be certified by an approved laboratory in accordance with at least one of the following: Soil Conservation Service published data and technical guides, state agricultural agency, Tennessee Valley Authority, BLM - USFS published data, physical and chemical analyses results, field-site trials, or greenhouse tests.

APPENDIX 2-9

Pace Canyon Fan Facilities
Topsoil and Storage Pile Calculations

REGISTERED PROFESSIONAL ENGINEER
5-13-05
No. 189797
LAYNE D.
JENSEN
STATE OF UTAH

Topsoil Calculations

General

- The outslopes of the topsoil stockpiles and berms are assumed to be 2:1. The angle of repose for soils in this area are in excess of 50°. Thus, the assumption is valid. Topsoil stockpiles for the Degas holes have successfully been built using 1:1 slopes.

- This site has been previously disturbed. Thus, topsoil resources are limited. 18 inches of topsoil will be stripped and stockpiled from areas impacted by construction with the exception of the current road area and areas only temporarily disturbed. Such as the area impacted by portal construction. (See Plate PC7-5A)

- Berms will be constructed of subsoil not topsoil.

- Topsoil stripped from temporarily disturbed areas will be stockpiled separately. This topsoil will be protected with silt fences until it is replaced, mulched, gouged and reseeded. These areas include the area above the portal and channel diversion area.

Ave. topsoil depth = 18"

Area to be stripped of topsoil = 57,460 ft^2

Volume of topsoil = $(57{,}460\ ft^2)(1.5ft) = 86{,}190\ ft^3 = 3{,}192\ CY$

The Average End Area method will be used to estimate the volume in the topsoil stockpiles. The areas used in the calculation were generated in AutoCad using 1 foot contours

Shaft Area Topsoil Stockpile

Elevation (ft)	Area (ft^2)	volume (ft^3)
7028	0	
7029	228	114
7030	401	315
7031	558	479
7032	655	607
7033	826	740
7034	916	871
7035	1011	964
7036	967	989
7037	890	928
7038	790	840
7039	675	733
7040	562	618
7041	547	554
7042	543	545
7043	541	542
7044	535	538
7045	539	537
7046	503	521
7047	473	488
7048	449	461
7049	430	440
7050	410	420
7051	363	386
7052	310	337
7053	269	289
7054	233	251
7055	202	218
7056	170	186
7057	137	153
7058	110	124
7059	83	96

$15{,}284\ ft^3 = 566\ CY$

Portal Area Topsoil Stockpile

Elevation	Area (ft^2)	Volume (ft^3)
7008	82	367
7009	651	780
7010	910	946
7011	981	1021
7012	1062	1151
7013	1239	1336
7014	1433	1540
7015	1647	1677
7016	1707	1946
7017	2185	2342
7018	2499	2549
7019	2599	2616
7020	2632	2656
7021	2680	2707
7022	2735	2759
7023	2783	2811
7024	2838	2891
7025	2944	3159
7026	3375	3483
7027	3590	3727
7028	3864	3961
7029	4058	4216
7030	4375	4389
7031	4402	4415
7032	4428	4433
7033	4438	4436
7034	4434	4437
7035	4439	4538
7036	4638	4433
7037	4227	
		81,722 ft^3 ⇒ 3027 CY

Topsoil stockpile capacity = 566 + 3027 = 3593 CY

3593 CY > 3,192 ∴ All topsoil stripped from the site can be stored within the disturbed Area Boundary

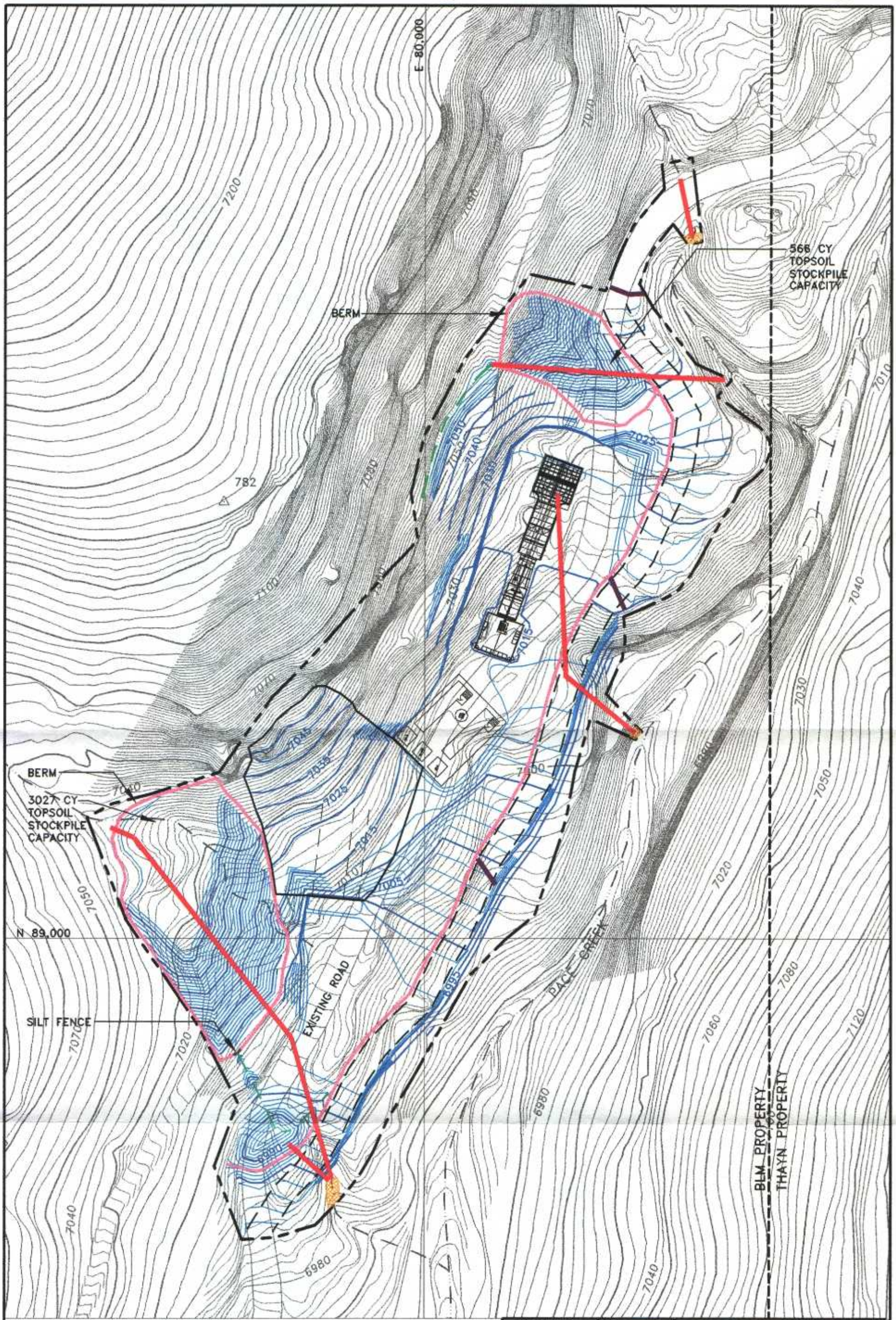

TOWNSHIP 13 SOUTH, RANGE 13 EAST, SECTION 30

LEGEND

CULVERT

RIPRAP

TOPOGRAPHY FROM OLYMPUS AERIAL SURVEYS INC.
FLOWN 08-12-04

REGISTERED PROFESSIONAL ENGINEER No. 10997 LAYNE D. JENSEN STATE OF UTAH

REVISIONS OR UP-DATES			DATE: 09-25-09	
NO.	DATE	BY	DESIGNED BY:	LDJ
			DRAWN BY:	SWF
			CHECKED BY:	VSM
			SCALE:	1"=60'

FILENAME: S:\AUTOCAD\13\ CMC\APPENDIX\APP 2-9 FIG 1.DWG\09-25-09

Canyon Fuel Company, LLC
Dugout Canyon Mine

PACE CANYON FAN TOPSOIL STOCKPILE TOPOGRAPHY

P.O BOX 1029
WELLINGTON, UTAH 84542

DRAWING OR MAP NUMBER
APPENDIX 2-9 FIG. 1

EarthFax Engineering, Inc.

CHAPTER 5

ENGINEERING

APPENDIX 5-6

Reclamation Bond Estimate

Bonding Calculations

Direct Costs

Subtotal Demolition and Removal	$861,763.00	
Subtotal Backfilling and Grading	$551,775.00	
Subtotal Revegetation	$382,523.00	
Direct Costs	$1,796,061.00	
Indirect Costs		
Mob/Demob	$179,606.00	10.0%
Contingency	$89,803.00	5.0%
Engineering Redesign	$44,902.00	2.5%
Main Office Expense	$122,132.00	6.8%
Project Mainagement Fee	$44,902.00	2.5%
Subtotal Indirect Costs	$481,345.00	26.8%
Total Cost	$2,277,406.00	
Escalation factor		0.0259
Number of years		2
Escalation	$119,497.00	
Reclamation Cost Escalated	$2,396,903.00	
Bond Amount (rounded to nearest $1,000)	$2,397,000.00	
2005 Dollars		

	Equipment Cost	Hourly Operating Costs	Equipment Overhead	Operator's Hourly Wage Rate	Hourly Cost	Number of Men or Eq.	Total Eq. & Lab. Costs	Units	Quantity	Units	Production Rate	Units	Equip. + Labor Time/Dis.	Units	Cost
Facilities Area 01															308109
Facilities Area 02															119177
Stream Channel 03															32869
Gabion Basin 04															
Refuse Pile 05															71327
Pace Canyon Fan Portal															20293
Subtotal															551775

	Equipment Cost	Hourly Operating Costs	Equipment Overhead	Operator's Hourly Wage Rate	Hourly Cost	Number of Men or Eq.	Total Eq. & Lab. Costs	Units	Quantity	Units	Production Rate	Units	Equip. + Labor Time/Dis.	Units	Cost
Pace Canyon Fan Portal															
Backfill Shaft															
CAT 325BL (10-21)(2nd04)	9170	35.55	0.1	52	148.42	1	148.42	$/HR	641	CY	216	CY/HR	3	HR	445
6X4 70,000lbs 12-18 CY (20-11) (1Q04)	3600	25.75	0.1	42	92.83	3	278.49						3	HR	835
Trucking Topsoil															
CAT 325BL (10-21)(2nd04)	9170	35.55	0.1	52	148.42	1	148.42	$/HR	922	CY	150	CY/HR	6.1	HR	905
6X4 70,000lbs 12-18 CY (20-11) (1Q04)	3600	25.75	0.1	42	92.83	13	1206.79						6.1	HR	7361
Backfill Portal															
D8R Series II Semi-U EROPS (9-55) (2nd04)	13720	53.4	0.1	52	196.49	1	196.49	$/HR	331	CY	171	CY/HR	1.9	HR	373
Subsoil Placement															
D8R Series II Semi-U EROPS (9-55) (2nd04)	13720	53.4	0.1	52	196.49	1	196.49	$/HR	4045	CY	90	CY/HR	44.9	HR	8822
Doze On -site Topsoil															
D8R Series II Semi-U EROPS (9-55) (2nd04)	13720	53.4	0.1	52	196.49	1	196.49	$/HR	1206	CY	480	CY/HR	2.5	HR	491
Doze Trucked Topsoil															
D8R Series II Semi-U EROPS (9-55) (2nd04)	13720	53.4	0.1	52	196.49	1	196.49	$/HR	922	CY	171	CY/HR	5.4	HR	1061
Subtotal															20293

Ref.	Description	Materials	Reference Number	Unit Cost	Unit	Length	Width	Height	Diameter	Area	Volume	Weight	Density	Time	Number	Unit	Swell Factor	Quantity	Unit	Cost
	Degas Well G45																			
	Soil Preparation																			
	Pocking	Excavation Bulk Bank 2 CY (322BL)	02315 400 0260	1.73	/CY					18						AC		29040	CY	50239
	Subtotal																			50239
	Seed Mix No 1																			
	Hydroseed Equipment and Labor	Hydro Spreader (equip. & labor) B-81 80MS	Reveg002	18.8	/MSF					18						AC		784	MSF	14739
	Hydroseed Material	Dugout Seed Mix No 1	Dugout 07391S	394.75	/AC					18						AC		18	AC	7106
	Hay Mulch	Hay material only 02370 700 1200	Reveg001R	57.2	/ton					18						AC		18	ton/AC	1030
	Transplant Area No 1																			
	Area																			
	Transplant Materials	Dugout Transplant Mix No 1	Dugout 07391T	349	/AC					18						AC		18	AC	6282
	Transplant Labor	Bare root seedlings, 6" to 10"	02912 350 0711	1.21	Ea										550	#/AC		9900	EA	11979
	Subtotal																			41136
	Direct Vegetation																			91375
	Reseeding																			
	Assume 25% reveg rate																			1271
	Total																			92646

Ref.	Description	Materials	Reference Number	Unit Cost	Unit	Length	Width	Height	Diameter	Area	Volume	Weight	Density	Time	Number	Unit	Swell Factor	Quantity	Unit	Cost
	Pace Canyon Fan Portal																			
	Soil Preparation																			
	Pocking	Excavation Bulk Bank 2 CY (322BL)	02315 400 0260	1.73	/CY					1.7						AC		2743	CY	4745
	Subtotal																			4745
	Seed Mix No 1																			
	Hydroseed Equipment and Labor	Hydro Spreader (equip. & labor) B-81 80MS	Reveg002	18.8	/MSF					1.7						AC		74	MSF	1391
	Hydroseed Material	Dugout Seed Mix No 1	Dugout 07391S	394.75	/AC					1.7						AC		1.7	AC	671
	Hay Mulch	Hay material only 02370 700 1200	Reveg001R	57.2	/ton					1.7						AC		1.7	ton/AC	97
	Subtotal																			2159
	Direct Vegetation																			6904
	Reseeding																			
	Assume 25% reveg rate																			1271
	Total																			8175

APPENDIX 5-10

Pace Canyon Fan Facilities

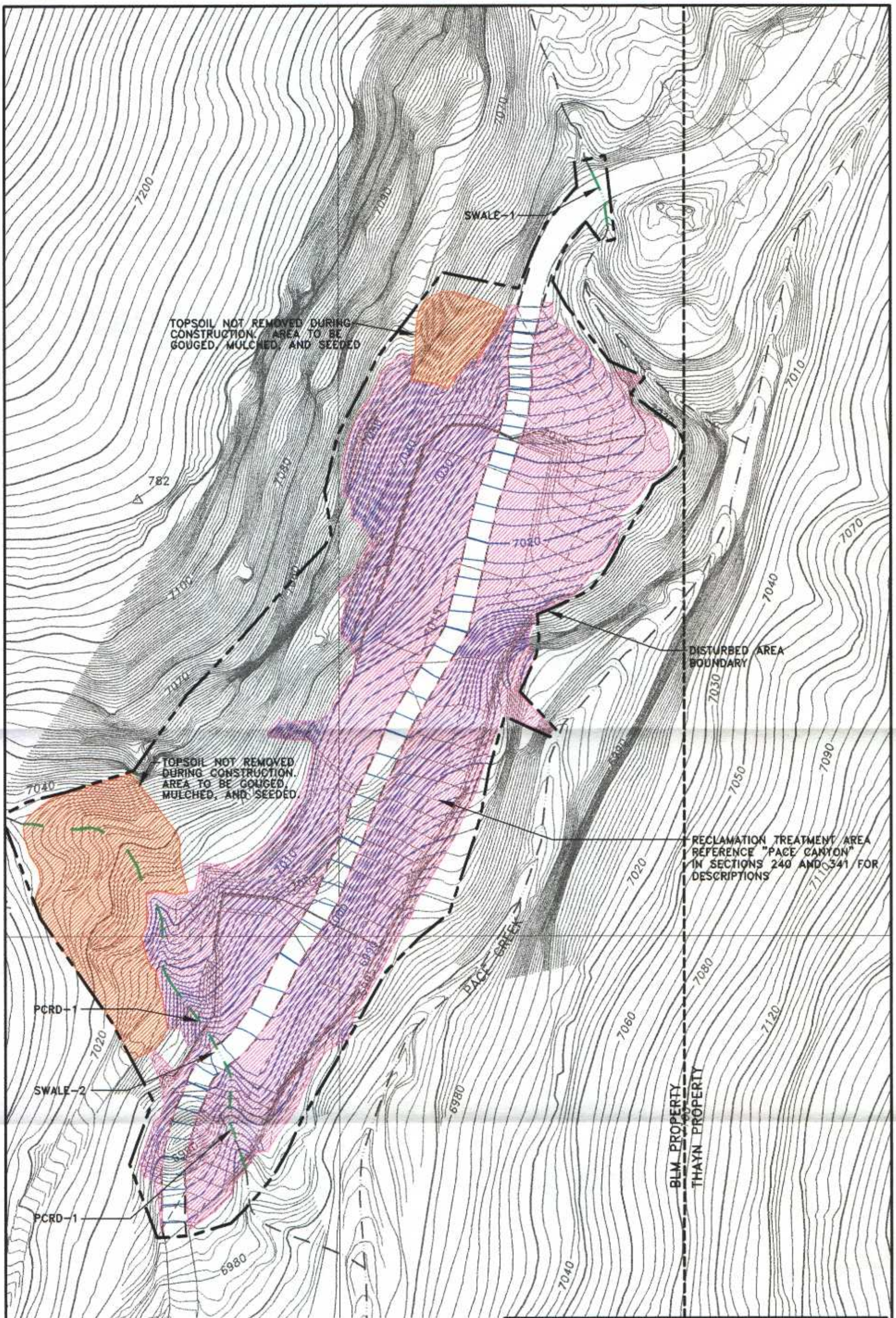

TOWNSHIP 13 SOUTH, RANGE 13 EAST, SECTION 30

RECEIVED

MAY 27 2005

DIV. OF OIL, GAS & MINING

TOPOGRAPHY FROM OLYMPUS AERIAL SURVEYS INC.
FLOWN 08-12-04

REGISTERED PROFESSIONAL ENGINEER No. 155727 LAYNE D. JENSEN STATE OF UTAH

REVISIONS OR UP-DATES			DATE: 03-15-05	
NO.	DATE	BY	DESIGNED BY:	LDJ
1.	APR 05	LDJ	DRAWN BY:	SWF
2.	MAY 05	LDJ	CHECKED BY:	VSM
			SCALE:	1"=60'

FILENAME: Q:\U0061\5\12\DWG\APRIL MAPS\PLATE5-6.DWG\03-15-05

Canyon Fuel Company, LLC
Dugout Canyon Mine

PACE CANYON FAN RECLAMATION TREATMENT MAP

P.O BOX 1029
WELLINGTON, UTAH 84542

DRAWING OR MAP NUMBER
PLATE PC5-6

EarthFax Engineering, Inc.

CHAPTER 7

HYDROLOGY

velocities are not expected to be erosive. RD-10 was designed with a similar cross section, but with a median riprap diameter of 6 inches.

During reclamation of the Pace Canyon Fan Portal Site two drainages will be affected. Both drainages had been disturbed by the road building activities prior to the construction of the Dugout Canyon Mine and Pace Canyon Fan Portal Facilities. In both drainages a section of the channel had been destroyed by the road construction. During reclamation these drainages will be reestablished. Reclamation channel PCRD-1 will be constructed in the drainage south of the portal with the exception of where the channel crosses the road. At the road crossing a swale will be constructed. The swale will have side slopes of 7.5:1 and a depth of 1 foot. Reclamation channel PCRD-1 will be constructed with a bottom width of 2.5 feet, side slopes of 2:1, depth of 1 foot and D_{50} = 6 inch riprap. The reclaimed channel (PCRD-1) will follow the preexisting natural channel meanders where a natural channel exists. Upper portions of the reconstructed channel will be constructed on native materials while lower portions of the channel will be constructed on regarded materials. The top and bottom of the reconstructed channel will tie into the natural undisturbed channel. The culvert in the drainage north of the site will be replaced by a swale with a bottom width of 5 feet, side slopes of 7.5:1 and a depth of 1 foot. In accordance with R645-301-742.333, these channels were designed to safely convey the peak flow resulting from the 10-year, 6-hour precipitation event. See Plate PC5-5 in Appendix 5-10 and Attachment 3 in Appendix 7-12 for the reclamation channel location and calculations respectively.

As a result of pre-SMCRA disturbances at the site, Dugout Creek and its eastern tributary have experienced significant instability. This instability is especially noteworthy in a 300-foot section of Dugout Creek near the central portion of the proposed disturbed area. In this section, past blockage of a culvert installed by prior operators resulted in a re-routing of the creek, together with extensive downcutting (both up- and downstream from the blockage) and erosion of the site. The results of this damage are evident throughout, as well as up- and downstream from, the proposed disturbed area as headcutting and deposition have occurred.

SCM is committed to restoring the Dugout Creek channel to a more natural functioning condition as a result of site reclamation. In an effort to determine the best means for accomplishing this channel restoration, Dugout Creek was evaluated within the proposed disturbed and adjacent areas by Mr. Galen W. Williams of EarthFax Engineering, Inc. Mr. Williams, who is a registered Professional Geologist in the state of Wyoming, received a Master of Science degree in Applied Geomorphology from the University of Utah in 1981. Since that time, he has performed multiple stream and river channel morphology studies as they relate to proposed hydroelectric projects and dams. His geographical area of expertise includes Utah, Idaho, Oregon, Washington, and Hawaii. Past work performed by Mr. Williams has included evaluations of the long-term morphological changes which occur to streams as a result of water development, including the development of

designs to minimize the impacts of reduced flows resulting from diversion into penstocks and increased flows downstream from spillways and hydroelectric plant discharges.

Mr. Williams concluded from his site visit that Dugout Creek can currently be classified as a Type A4 stream (using the stream classification system of Rosgen, 1996). The "A" in the classification indicates that this stream type is generally entrenched and is characterized by a steep gradient (typically 4 to 10 percent) with a low width-to-depth ratio and low sinuosity. The "4" in the classification indicates that the channel material is generally composed of gravel, with lesser amounts of boulders, cobbles, sand, and fines. In its current form, the channel is very unstable and appears to be undergoing frequent change. Based on measurements collected by Mr. Williams in the existing truncated bend of the stream within the proposed disturbed area (i.e., that section of the stream which was largely abandoned when the upstream culvert blockage occurred), the natural stream at bankfull stage had a width of approximately 3 feet and a depth at the thalweg of approximately 1 foot within the disturbed area. This low-flow channel exists within a larger channel that has a width of approximately 8 to 12 feet at the top of the low-flow channel.

Mr. Williams concluded from his field observations that the high-energy system associated with Dugout Creek will require the establishment of a stable macro channel during reclamation to provide protection against mass wasting of the site by future runoff events. Within this macro channel, however, the formation of a micro channel should be encouraged through the establishment of selectively-placed "obstructions", such as boulders and logs which are anchored into the bank.

Mr. Williams cautioned that, due to the high energy associated with the Dugout Creek system, it would not be wise to physically construct a low-flow channel within the macro channel. To do so would likely be futile, since it would be essentially impossible to predetermine the morphological hydraulics of the micro system which would best fit the site. Hence, he recommended that the enhancement features be placed during reclamation, then allowing the stream to deposit sediment upstream from the obstructions. By this action, the stream would construct its own micro channel, with its associated "step-pool" system which is typical of Type A streams. If future runoff events cause variations within the micro system, Mr. Williams concluded that these changes will be in keeping with the morphological processes which are also typical of Type A streams. However, with the stability provided by the macro channel, the site should be protected, even if minor local changes occur within the reclaimed reaches of Dugout Creek.

APPENDIX 7-12

Pace Canyon Fan Portal Site

TABLE OF CONTENTS

Section — Page

710 INTRODUCTION 7-12-1

732 Sediment Control Measures 7-12-1

732.100 Siltation Structures 7-12-1
732.200 Sedimentation Ponds 7-12-1

Compliance Requirements 7-12-2
MSHA Requirements 7-12-2

732.300 Diversions 7-12-2
732.400 Road Drainage 7-12-4

733 Impoundments 7-12-4

733.100 General Plans 7-12-4

Certification 7-12-4
Maps and Cross Sections 7-12-4
Narrative 7-12-4
Subsidence Survey Results 7-12-4
Hydrologic Impact 7-12-5
Design Plans and Construction Schedule 7-12-5

733.200 Permanent and Temporary Impoundments 7-12-5

Requirements 7-12-5
Permanent Impoundments 7-12-5
Temporary Impoundments 7-12-5
Hazard Notifications 7-12-5

734 Discharge Structures 7-12-5

740 DESIGN CRITERIA AND PLANS 7-12-5

741 General Requirements 7-12-5

742 Sediment Control Measures 7-12-6

742.100 General Requirements 7-12-6

TABLE OF CONTENTS (Continued)

Section — Page

Design 7-12-6
Measures and Methods 7-12-6

742.200 Siltation Structures 7-12-6

General Requirements 7-12-6
Sedimentation Ponds 7-12-7
Other Treatment Facilities 7-12-10
Exemptions 7-12-11

742.300 Diversions 7-12-11

General Requirements 7-12-11
Diversion of Perennial and Intermittent Streams 7-12-12
Diversion of Miscellaneous Flows 7-12-12

742.400 Road Drainage 7-12-14

All Roads 7-12-14

743 Impoundments 7-12-14

744 Discharge Structures 7-12-14

744.100 Erosion Protection 7-12-14
744.200 Design Standards 7-12-15

LIST OF TABLES

Table

7-1 Summary of Watershed Data 7-12-9

7-2 Stage-Capacity Curve for the Sediment Trap 7-12-9

7-3 Summary of Diversion Ditches 7-12-13

7-4 Summary of Diversion Culverts 7-12-13

LIST OF PLATES

Plate

PC7-4 Pace Canyon Fan Sediment Trap Detail and Cross Sections

PC7-5 Pace Canyon Fan Disturbed Area Diversions

PC7-5A Pace Canyon Fan Sediment Control Map

PC7-6 Pace Canyon Fan Undisturbed Watershed Boundaries

PC7-7 Pace Canyon Fan Reclamation Watershed Boundaries

LIST OF ATTACHMENTS

Attachment

1 Hydrology Calculations

2 Alternate Sediment Control Calculations

3 Reclamation Hydrology Calculations

710 INTRODUCTION

This appendix gives details regarding the drainage and sediment controls proposed for the Pace Canyon Fan Portal Site. Sections of Chapter 7 of the M&RP that would require significant revisions or additions related to the Pace Canyon Fan Portal Site have been recreated in this appendix to minimize confusion between the Dugout Canyon Site and the Pace Canyon Fan Portal Site. To aid in review the same numbering system used in Chapter 7 has been used in this appendix. Chapter 7 of the M&RP should be referred to for any sections not included in this appendix.

732 Sediment Control Measures

The sediment control measures for the Pace Canyon Fan Portal Area have been designed to prevent additional contributions of sediment to streamflow or to runoff outside the permit area. In addition, they have been designed to meet applicable effluent limitations, and minimize erosion to the extent possible.

The structures to be used for the runoff-control plan for the area include disturbed and undisturbed area diversion channels, a sediment trap, containment berms, silt fences, and road diversions and culverts.

732.100 Siltation Structures

The siltation structure within the disturbed area will be a sediment trap as described in Section 732.200.

732.200 Sedimentation Ponds

There will be no sediment pond at the fan portal site, instead there is a single sediment trap located at the southwest end of the disturbed area. The sediment trap topography and cross sections are presented on Plate PC 7-4. Details regarding the sediment trap design are presented in this appendix.

Sediment accumulation will be removed periodically as needed. A large sediment load to this sediment trap is not anticipated since Alternate Sediment Control Measures ("ASCM") are being used at the site. Alternate sediment control calculations are included in this appendix that

demonstrate that the sediment yield from the site will be less than before the site was built without a sediment trap. Thus, the sediment trap is not expected to accumulate a large volume of sediment. The sediment will be disposed of at the approved waste rock disposal sites as described in Chapter 5, Section 520 of this M&RP.

The sediment trap is within the disturbed area boundary and is subject to final reclamation. The area is included in the calculation of the disturbed area subject to bonding and in the calculation of final reclamation costs.

Compliance Requirements. The sediment trap will be maintained until removal in accordance with the reclamation plan (see Section 540 of this M&RP). When the pond is removed, the land will be revegetated in accordance with the reclamation plan defined in Section 540.

The sediment trap was designed to contain approximately 60% of the runoff from the 10-year, 24-hour storm event. The spillway for the sediment trap will easily pass the peak flow resulting from the 25-year, 6-hour precipitation event.

MSHA Requirements. MSHA requirements defined in 30 CFR 77.216 are not applicable since the sediment trap will not impound water or sediment to an elevation of 20 feet or more above the upstream toe of the structure. The trap will also store a volume less than 20 acre-feet.

732.300 Diversions

The objective of the runoff control plan is to isolate, to the maximum degree possible, runoff from disturbed areas from that of undisturbed areas. This is accomplished by:

- Building all facilities at least 30 feet from Pace Creek;
- Routing runoff from the adjacent undisturbed areas above the facilities through culverts and diversion ditches where feasible to bypass the disturbed area; and
- Routing any runoff from undisturbed areas which enters the disturbed area into the sediment control system.

The location of each diversion ditch or culvert for the site is presented on Plate PC7-5. Details regarding design of the diversions are presented in this appendix. A brief list of the proposed diversion structures follows (refer to Plates PC7-5 and PC7-6 for the location of each watershed boundary):

Diversion Ditches:

- Interception ditch PCUD-1 above the generators and fan structure will collect runoff from adjacent undisturbed watersheds and direct the runoff into a tributary of Pace Creek.

- Disturbed drainage ditch PCD-1 will be located upstream from the sediment trap. The majority of runoff from the site will reach the sediment trap by sheet flow. This ditch will collect the sheet flow and safely convey the runoff into the sediment trap.

- Disturbed drainage ditch PCD-2 will connect the discharge from the southern topsoil stock pile with the sediment trap. The runoff will be treated by a silt fence prior to leaving the bermed stockpile area. This ditch will collect the flow from within the bermed topsoil stockpile area and safely convey the runoff into the sediment trap.

Diversion Culverts:

- Culverts PCUC-1, 2 and 3 will all divert undisturbed runoff around the disturbed area.

- Culvert PCDC-1 will convey runoff in excess of the sediment trap's capacity to a tributary of Pace Creek. This culvert is the sediment trap's spillway.

All diversion ditches will be maintained with adequate riprap or alternative erosion protection in the ditch sections where flow velocities are predicted to be sufficiently high to require a ditch lining. Adequate ditch capacities will be maintained in all ditch sections. Culverts will be kept free of debris and each outlet will be protected with riprap where deemed necessary. Detailed diversion designs are presented in Attachment 1 of this appendix.

732.400 Road Drainage

Road drainage facilities will include a water bar to divert road runoff into the adjacent drainage just above the site and two culverts to divert runoff from undisturbed drainages under the road. Two additional water bars are located on the road adjacent to the facilities (Plate 5-2). After site construction has been completed the interim sediment control will be removed (Section 731.100 in M&RP)and the road drainage from the realigned BLM road will be treated the same as the rest of the road. A berm will prevent any runoff from the fan portal site from mixing with the road drainage.

Road drainage diversions and culverts will be maintained and repaired, as needed, following major storm events.

733 Impoundments

733.100 General Plans

There will be a single sediment trap operating at the site as described in Section 732.200. The sediment trap topography and cross sections are presented on Plate PC 7-4 and design information is presented in Attachment 1 of this appendix.

Certification. All maps and cross sections of the sedimentation trap have been prepared by or under the direction of, and certified by a qualified, registered, professional engineer.

Maps and Cross Sections. The topography and cross sections for the sediment trap are provided on Plate PC7-4.

Narrative. A description of the sediment trap is presented in Sections 732.200 and 742 of this appendix.

Subsidence Survey Results. No underground coal mining will occur beneath the proposed sediment trap. Therefore, there will be no effects on the sediment trap from subsidence.

Hydrologic Impact. The hydrologic and geologic information required to assess the hydrologic impacts of the proposed sediment trap are presented in Section 724 and Chapter 6 of this M&RP, respectively.

Design Plans and Construction Schedule. There are no additional structures proposed for the mining operation at this time. Any structures proposed in the future will not be constructed until the Division has approved the detailed design plan for the structure.

733.200 Permanent and Temporary Impoundments

Requirements. The sediment trap has been designed using current, prudent engineering practices.

Permanent Impoundments. There are no permanent impoundment structures proposed for use in mining and reclamation operations within the disturbed and adjacent areas.

Temporary Impoundments. The Division's authorization is being sought for the construction of the sediment trap as a temporary impoundment at the fan portal site as part of coal mining and reclamation operations.

Hazard Notifications. The sediment trap will be examined for structural weakness and erosion and if a potential hazard to the public exists the Division will be promptly informed. A plan will be formulated to mitigate the hazard associated with the sediment trap.

740 DESIGN CRITERIA AND PLANS

741 General Requirements

This appendix includes site-specific plans that incorporate minimum design criteria for the control of drainage from disturbed and undisturbed areas associated with the Pace Canyon Fan Portal Site.

742 Sediment Control Measures

742.100 General Requirements

Design. Sediment-control measures have been designed to provide the following:

- Prevent additional contributions of sediment to stream flow or to runoff outside the permit area;
- Meet the effluent limitations defined in Section 751; and
- Minimize erosion to the extent possible.

Measures and Methods. The sediment control measures at the site will include practices carried out within and adjacent to the disturbed area. Sediment control methods will include:

- Retention of sediment within the disturbed area;
- Diversion of runoff away from the disturbed area;
- Diversion of runoff using channels or culverts through disturbed areas to prevent additional erosion;
- Provision of silt fences, riprap, contemporaneous revegetation, vegetative sediment filters, a sediment trap, and other measures that reduce overland flow velocities, reduce runoff volumes or trap sediment; and
- Treatment of mine drainage in underground sumps.

742.200 Siltation Structures

General Requirements. Additional contributions of suspended solids and sediment to stream flow or runoff outside the permit area will be prevented to the extent possible using alternate sediment control measures and a sediment trap. The sediment trap will be constructed as soon as practical

when construction commences. The structures will be certified by a qualified registered professional engineer.

The sediment trap has been designed and will be constructed and maintained as described in Chapter 5 and Sections 733 and 743.

The sediment trap is part of an alternate sediment control system at the site. Due to the small size of the site a sedimentation pond is not reasonable. Thus alternate sediment control is being used. A combination of sediment control methods will be used. As shown on Plate PC7-5A three types of alternate sediment control will be used in addition to the sediment trap. In areas that will not be disturbed after construction and which have 2:1 slope or flatter the area will be deep gouged mulched and hydroseeded. These areas include the topsoil stockpile and its 2H : 1V slopes even though there will also be a full containment berm around the stockpiles. This is the same sediment control method that has been used during final reclamation of many sites with great success. The areas that may be disturbed during operation, such as the sediment trap area, and areas of very steep slopes will be mulched and hydroseeded. Finally, the operational areas and areas prevented from being vegetated by MSHA requirements will be covered by gravel or riprap. The gravel used will be washed 2 inch minus gravel. In Attachment 2 of this appendix alternate sediment control calculations have been made to demonstrate that the above three methods reduce the operational sediment yield of the site to less than the pre-mining sediment yield. Thus, the alternate sediment control measures sufficiently control sediment yield without the use of a sedimentation pond. The proposed sediment trap will provide additional sediment control.

Sediment ponds. A single sediment trap has been designed for the site. The sediment trap will be located in the southwest corner of the disturbed area.

Design, Construction, and Maintenance

Sediment Storage Volume. The sediment trap has been designed to control sediment from disturbed and undisturbed areas. The disturbed area contributing runoff to the sediment trap contains 3.03 acres from watershed PCWS-1 (portions of which will be undisturbed or contemporaneously reclaimed) and the south topsoil stockpile. As discussed previously the sediment trap will be installed in addition to alternate sediment control measures. The sediment load of the runoff flowing into the sediment trap will be less than if an equal amount of runoff from an undisturbed area flowed into the sediment trap. Thus, sediment is expected to accumulate

slowly. Since this is not a sedimentation pond there is not a maximum specified sediment storage volume. However, sediment will be removed when accumulated sediment fills up approximately half of the sediment trap's capacity.

Detention Time. The combination of the alternate sediment control measures and sediment trap should allow any effluent to meet UPDES and 40 CFR Part 434 limitations.

Design Event. The sediment trap has been designed to contain about 28 % of the runoff resulting from the 10-year, 24-hour precipitation event before runoff flows out the spillway. The sediment trap can hold 70% of the 10-year, 24-hour precipitation event if the spillway is plugged

Sediment Trap Description. Watershed PCWS-1 and the south topsoil stockpile area define the area that flows to the sediment trap. This watershed includes both disturbed and undisturbed areas.

The curve numbers used to determine the runoff volumes were based on information presented in Attachment 1 of this appendix. The area weighted average curve number for PCWS-1 was estimated to be 83. Refer to Table 7-1 for a list of all disturbed and undisturbed watershed areas.

The storm runoff volume to the sediment trap resulting from the 10-year, 24-hour storm event was calculated to be 7259 cubic feet (0.17 acre-feet). The calculations, presented in Attachment 1 are based on hydrologic design methods described in Appendix 7-10. As presented above, the maximum sediment storage volume is approximately half of the sediment trap capacity or about 1000 cubic feet).

The spillway on the sediment trap will be set at an elevation of 6991.0. The spillway will be an eighteen inch CMP. As calculations in Attachment 1 demonstrate, this spillway can easily pass the runoff from a 25-year 6-hour storm event.

From the final analysis of the 25-year, 6-hour storm event, the maximum inflow rate to the sediment trap from storm runoff under design conditions was calculated to be 0.88 cubic feet per second (cfs). Although the sediment trap will reduce the peak outflow the same flow of 0.88 cfs was used to design the spillway. The spillway has a maximum capacity of 5.5 cfs without generating a headwater. The top of the sediment trap embankment will be at least 3 feet above the inlet

elevation for the spillway. Therefore, the trap has been designed with adequate freeboard. The spillway outlet will be protected by the placement of D_{50} = 6 inch riprap (minimum).

TABLE 7-1
SUMMARY OF WATERSHED DATA

Watershed[a]	Curve Number	Area (acres)	Time of Concentration (hours)
PCWS-1	83	2.73	0.044
PCWS-2	80	2.55	0.038
PCWS-3	80	37.47	0.126
PCWS-4	80	149.30	0.235
Topsoil (South)	80	0.3	0.017

(a) See Plates PC7-5, and 7-6 for watershed boundaries

TABLE 7-2
STAGE-CAPACITY CURVE FOR THE SEDIMENT TRAP

ELEVATION (FT)	AREA (FT^2)	INCREMENTAL VOLUME (FT^3)	CUMULATIVE VOLUME (FT^3)
6,986	55.5		0
		347.3	
6,988	291.8		347.3
		933.3	
6,990	641.5		1280.6
		1740.3	
6,992	1098.8		3020.9
		2909.3	
6,994	1810.5		5930.2

Dewatering Device. The primary spillway will be the only outlet for stormwater in the sediment trap. Water will be discharged from the pond in accordance with UPDES guidelines.

Short Circuiting. Short circuiting may occur if the storage capacity of the sediment trap is exceeded. However, the alternate sediment control measures will adequately control the sediment yield from the site. The sediment trap will still provide sediment control beyond what is required.

Sediment Removal. Sediment removal from the sediment trap will occur when the sediment level reaches approximately 50% of the sediment trap's storage capacity. This corresponds to an approximate elevation of 6989.5 or 1.5 feet below the spillway inlet elevation. The sediment removed from the sediment trap will be transported and disposed of as discussed in Chapter 5, and Chapter 7, Section 732.200 of this M&RP. Water that meets the quality standards set forth in the UPDES permit will be discharged to Pace Creek before sediment cleanout begins. Water not meeting the standards will be used for dust suppression within the disturbed area or on mine roadways.

Excessive Settlement. The majority of the sediment trap is to be excavated from native undisturbed material or from under the existing road, thereby making settlement highly unlikely. Less than 4 feet of the embankment will be constructed. The portion of the embankment to be constructed will be constructed in a manner to minimize settlement.

Embankment Material. During construction of the sediment trap, any material to be used in the embankment will be inspected to ensure the material is free of sod, large roots, frozen soil, and acid- or toxic forming coal-processing waste.

Compaction. The sediment trap will be primarily excavated out of native undisturbed ground, thereby eliminating the need for additional compaction. Any portion of the embankment constructed will be compacted to a minimum dry density of 90 % as determined by ASTM D1557.

MSHA Sediment Ponds. MSHA requirements defined in 30 CFR 77.216 are not applicable at this site. Refer to Section 732.200.

Other Treatment Facilities. There are no other treatment facilities within the mine permit area.

Exemptions. No exemptions are being proposed at this time.

742.300 Diversions

General Requirements. The diversions within the permit area will consist of drainage ditches and culverts. All diversions within the permit area have been designed to minimize adverse impacts to the hydrologic balance, to prevent material damage outside the permit area, and to assure the safety of the public.

All diversions and diversion structures have been designed and will be constructed, and maintained and used to:

Be stable;

Provide protection against flooding and resultant damage to life and property;

Prevent, to the extent possible, additional contributions of suspended solids to stream flow outside the permit area; and

Comply with all applicable local, state, and federal laws and regulations.

All diversions within the disturbed area will be removed when no longer needed. The diversions will be reclaimed in accordance with the reclamation plan defined in Chapter 5.

Peak discharge rates from the undisturbed and disturbed area drainages within the area were calculated for use in designing diversion ditches and culverts. The storm runoff calculations for the temporary diversion structures were based on the 10-year, 6-hour precipitation event of 1.35 inches.

Curve numbers were based on those defined in Attachment 1 of this appendix and professional judgement. A description of the methods used to determine the peak discharge rates is presented in Appendix 7-10 of this M&RP.

The disturbed and undisturbed drainage areas within and above the facilities area are presented on Plate PC7-5. A summary of the characteristics of watersheds contributing to the diversions is presented in Table 7-1.

All proposed diversions are presented on Plate PC7-5. The minimum capacity and freeboard of each diversion ditch and culvert was determined based on the minimum ditch slope. The maximum velocity and need for a channel lining or outlet protection was calculated based on the maximum ditch or culvert slope. Slopes were measured from a aerial topography generated with a 1 foot contour interval. A description of the methods used to determine diversion capacities, flow velocities, and riprap sizes is presented in Attachment 1 of this appendix. All diversion calculations are presented in Attachment 1 of this appendix.

Diversion of Perennial and Intermittent Streams. No perennial streams will be diverted at this site. The 24-inch culvert PCUC-2 will divert the runoff from the intermittent stream south of the portal. The 36-inch culvert PCUC-3 will divert runoff from the intermittent stream north of the site. The design calculations for both culverts can be found in Attachment 1 of this appendix. At the inlet of culvert PCUC-2 a series of vertical posts will be constructed to prevent trash/debris from entering the culvert. The posts surrounding the inlet will be placed in a zigzagged pattern 2 feet apart (approximate) and approximately five feet above the inlet.

Diversion of Miscellaneous Flows. Diversion ditches and culverts have been utilized within the fan portal area to divert miscellaneous flows from disturbed and undisturbed area drainages.

Diversion Ditches. A summary table of the minimum channel geometry, channel slope, peak discharge, minimum riprap requirements, maximum flow velocity and minimum freeboard values for each diversion ditch within the facilities area is presented in Table 7-3. All calculations are contained in Attachment 1 of this appendix. Each ditch has adequate capacity and erosion protection to safely pass the peak flow resulting from the 10-year, 6-hour precipitation event. A description of the diversion ditches within the facilities area is presented in Section 732.300.

Diversion Culverts. A summary table of the culvert size, slope, peak discharge, outlet riprap, and outlet flow velocity for each culvert within the facilities area is presented in Table 7-9.

Calculations are contained in Attachment 1 of this Appendix. Culverts were designed to convey the peak runoff resulting from the 10-year, 6-hour precipitation event. A description of the diversion culverts within the facilities area is presented in Section 732.300.

Diversion Berms. Although several berms are noted on Plate PC7-5, these will be installed primarily to meet MSHA requirements for safety concerns adjacent to slopes. However, these berms may also locally convey runoff from higher-elevation pads to lower-elevation pads, where it will be

TABLE 7-3
SUMMARY OF DIVERSION DITCHES

Diversion	Minimum Bottom Width (ft)	Minimum Top Width (ft)	Minimum Depth (ft)	Side Slopes (H:V)	Minimum Slope (%)	Maximum Slope (%)	Peak Flow[a] (cfs)	Required Riprap D_{50} (in)	Minimum Freeboard (ft)
PCUD-1	0	4.0	1.0	2:1	3.6	10.0	0.57	none	0.67
PCD-1	1	4.0	1.0	2:1	14.3	36.4	0.54	none	0.88
PCD-2	1.25	5.25	1.0	2:1	16.7	50.0	0.06	none	0.97

[a] Peak discharge resulting from the 10-year, 6-hour precipitation event.

Note: Constructed dimensions of the ditches may vary. However, an adequate cross section will be maintained to ensure that the ditches have adequate hydraulic capacity.

TABLE 7-4
SUMMARY OF DIVERSION CULVERTS

Diversion Culvert	Minimum Diameter (in)	Material	Inlet Type	Outlet Slope (%)	Peak Flow[a] (cfs)	Outlet Riprap D_{50} (in)
PCUC-1	18	CMP	Mitered	6.9	0.57	none
PCUC-2	24	CMP	Mitered	10.7	6.33	12
PCUC-3	36	CMP	Mitered	2.5	19.05	6
PCDC-1	18	CMP	Mitered	24.2	0.88	6
Mine Water Discharge Culvert	6	HDPE	NA	28.2	0.70	15

[a] Peak discharge resulting from the 10-year, 6-hour precipitation event except culverts PCDC-1 (designed for the peak discharge resulting from the 25-year, 6-hour event).

conveyed via diversion ditches to the sediment trap. Since none of the berms have been designed specifically to convey runoff, no calculations concerning the hydraulic characteristics of these berms are provided.

742.400 Road Drainage

All Roads. The BLM road will be realigned as shown on Plate PC5-2, in Appendix 5-10. Once the road has been realigned it will be maintain as the rest of the road above and below the realigned segment.

743 Impoundments

All pertinent information regarding the sediment trap is presented in Sections 732.200 and 742.200.

744 Discharge Structures

The discharge structures within the permit area will be the spillway on the sediment trap and a discharge line from the underground workings. The spillway on the sediment trap will adequately pass the peak discharge from the 25-year, 6-hour precipitation event. Detailed information concerning the sediment trap is presented in Sections 732.200 and 742.200.

The spillway on the sediment trap will consist of a 18-inch diameter CMP. The spillway will discharge to a tributary of Pace Creek. The design calculations for the spillway is presented in Attachment 1 of this appendix. The spillway details are presented on Plate PC7-4.

744.100 Erosion Protection

The only discharge structures associated with an impoundment will be the spillway from the sediment trap. The flow velocity at the spillway outlet under peak flow conditions is 7.19 fps. This velocity is considered to be erosive. Therefore, riprap with a D_{50} of 6 inches (minimum) will be installed at the culvert outlet. The calculations for the spillway outlet are presented in Attachment 1 of this appendix.

744.200 Design Standards

All discharge structures within the disturbed area have been designed and will be constructed according to standard engineering procedures.

APPENDIX 7-12
ATTACHMENT 1

Hydrology Calculations

REGISTERED PROFESSIONAL ENGINEER
5-13-05
No. 189797
LAYNE D.
JENSEN
STATE OF UTAH

— Pace Canyon Portal Site —

Rainfall Depths

10-yr	6-hr	1.35 in.
10-yr	24-hr	1.95 in
25-yr	6-hr	1.65 in
25-yr	24-hr	2.35 in
100-yr	6-hr	2.05 in

Curve Numbers

The curve number will be determined by combining vegetation, Hydrologic soil group, Vegetation density, Vegetation condition, and Field observation

The vegetation type is identified as mixed conifer on Plate 3-1 This vegetation type is very similar to pinyon-juniper. In fact Mt. Nebo who did a veg. study on the portal site identified the site as being a Pinyon-juniper vegetation type. (see Plate 3-1 E)

Plate 2-1 identifies two soil types in the associated watersheds Map unit 96 Rock outcrop Rubbleland Travesilla complex and map unit 84 Podo-Rock outcrop complex 50-70 percent slope. The Soil Survey of Carbon Area, Utah (1988) identifies the Hydrologic Soil Group as D for these soils.

Field observation indicates that the drainages on either side of the portal area do not flow for smaller storm events.

A general description of the vegetation type indicates a cover density between 60-70% which indicates a fair hydrologic condition.

According to Table 2-2d (pg 3) The curve number for the Pinyon-juniper vegetation type is 80

During the operational period there will also be reclaimed areas and graveled pads and roads.

The curve number for reclaimed area will be assumed to be 80 although with the use of the deep gouging method the reclaimed areas will not generate any runoff for a few years.

The curve number for the pad and road areas will be assumed to be 89 see Table 9.1 (pg 4 of this attachment)

Four watersheds have been identified. Three of the four watersheds are upgradient of the disturbed area and do not contain disturbed areas related to the portal contruction.

Thus these three watersheds have a curve number of 80

The Forth watershed contains the disturbed area. This watershed contains, undisturbed areas, road and pad areas, and reclaimed areas. The curve number will be determined by using an area weighted average.

Reclaimed	= 0.45 Acre	CN = 80
road/pad	= 0.69 Acre	CN = 89
undisturbed	= 1.59 Acres	CN = 80
	2.73 Acres	

$$CN = \frac{(0.45)(80) + (0.69)(89) + (1.59)(80)}{2.14} = 82.3 \Rightarrow 83$$

The portal topsoil stockpile will be treated as a watershed with the berm around the stockpile being the watershed boundary. The pile will be gouged and seeded. The same Curve number for a reclaimed area will be assumed i.e. CN = 80

Table 2-2d.—Runoff curve numbers for arid and semiarid rangelands[1]

Cover description		Curve numbers for hydrologic soil group—			
Cover type	Hydrologic condition[2]	A[3]	B	C	D
Herbaceous—mixture of grass, weeds, and low-growing brush, with brush the minor element.	Poor		80	87	93
	Fair		71	81	89
	Good		62	74	85
Oak-aspen—mountain brush mixture of oak brush, aspen, mountain mahogany, bitter brush, maple, and other brush.	Poor		66	74	79
	Fair		48	57	63
	Good		30	41	48
Pinyon-juniper—pinyon, juniper, or both; grass understory.	Poor		75	85	89
	Fair		58	73	80
	Good		41	61	71
Sagebrush with grass understory.	Poor		67	80	85
	Fair		51	63	70
	Good		35	47	55
Desert shrub—major plants include saltbush, greasewood, creosotebush, blackbrush, bursage, palo verde, mesquite, and cactus.	Poor	63	77	85	88
	Fair	55	72	81	86
	Good	49	68	79	84

[1]Average runoff condition, and $I_a = 0.2S$. For range in humid regions, use table 2-2c.

[2]Poor <30% ground cover (litter, grass, and brush overstory)
Fair 30 to 70% ground cover.
Good >70% ground cover.

[3]Curve numbers for group A have been developed only for desert shrub.

Post-it® Fax Note 7671	Date 4/12/99	# of pages ▶ 2
To Lane Jenson	From Sharon Falvey	
Co./Dept. Earth Fax	Co. DOGM	
Phone #	Phone # 801 538-5260	
Fax # 561-1861	Fax #	

APR-12-99 SUN 07:26 AM DIV OF OIL GAS MINING FAX NO. 3593940 P.01

Table 9.1.--Runoff curve numbers for hydrologic soil-cover complexes

(Antecedent moisture condition II, and $I_a = 0.2\ S$)

Land use	Cover: Treatment or practice	Cover: Hydrologic condition	Hydrologic soil group A	B	C	D
Fallow	Straight row	----	77	86	91	94
Row crops	"	Poor	72	81	88	91
	"	Good	67	78	85	89
	Contoured	Poor	70	79	84	88
	"	Good	65	75	82	86
	"and terraced	Poor	66	74	80	82
	" " "	Good	62	71	78	81
Small grain	Straight row	Poor	65	76	84	88
		Good	63	75	83	87
	Contoured	Poor	63	74	82	85
		Good	61	73	81	84
	"and terraced	Poor	61	72	79	82
		Good	59	70	78	81
Close-seeded legumes 1/ or rotation meadow	Straight row	Poor	66	77	85	89
	" "	Good	58	72	81	85
	Contoured	Poor	64	75	83	85
	"	Good	55	69	78	83
	"and terraced	Poor	63	73	80	83
	"and terraced	Good	51	67	76	80
Pasture or range		Poor	68	79	86	89
		Fair	49	69	79	84
		Good	39	61	74	80
	Contoured	Poor	47	67	81	88
	"	Fair	25	59	75	83
	"	Good	6	35	70	79
Meadow		Good	30	58	71	78
Woods		Poor	45	66	77	83
		Fair	36	60	73	79
		Good	25	55	70	77
Farmsteads		----	59	74	82	86
Roads (dirt) 2/		----	72	82	87	89
(hard surface) 2/		---	74	84	90	92

1/ Close-drilled or broadcast.
2/ Including right-of-way.

Watershed Area a	Drainage Area (ac)	Curve Number	S (in)	Y (%)	l (ft)	L (hr)	Time of Conc. (hr)	Peak Flow (cfs)
PCWS-1	2.73	83	2.048	46.9	560	0.026	0.044	0.77
PCWS-2	2.55	80	2.500	70.9	535	0.023	0.038	0.49
PCWS-3	37.47	80	2.500	70.4	2377	0.076	0.126	5.96
PCWS-4	149.3	80	2.500	57.7	4563	0.141	0.235	19.05
Topsoil	0.3	80	2.500	50	160	0.010	0.017	0.06

Notes

Watershed locations can be found on Plates PC7-5 and PC7-6
S = 1000/CN - 10
Y = average watershed slope = (length of contour lines)(contour interval)/(watershed area)
l = hydraulic length
L = watershed lag =(l^0.8(S+1)^0.7) / (1900(Y)^0.5)
Time of Concentration + 1.67L
Peak Flow is based on a 10-yr 6-hr storm event (calculations can be found on pages 6 to 9a)

Revised 5/05

revised 5/05

Triangular Hydrograph Calculations using

SCSHYDRO Program

Watershed I.D.:
PCWS-1

INPUT SUMMARY

STORM :	WATERSHED :
Dist.= SCS Type `b'	Area = 2.73 acres
Depth = 1.35 inches	CN = 83.00
Duration = 6.0 hrs	Time conc.= 0.04 hrs

OUTPUT SUMMARY

Runoff depth: 0.296 inches
Initial abstr: 0.410 inches
Peak flow: 0.77 cfs (0.281 iph)
at time: 2.505 hrs

---

revised 1-05

Triangular Hydrograph Calculations using

SCSHYDRO Program

Watershed I.D.:
PCWS-2

INPUT SUMMARY

STORM :	WATERSHED :
Dist.= SCS Type `b'	Area = 2.55 acres
Depth = 1.35 inches	CN = 80.00
Duration = 6.0 hrs	Time conc.= 0.04 hrs

OUTPUT SUMMARY

Runoff depth: 0.216 inches
Initial abstr: 0.500 inches
Peak flow: 0.49 cfs (0.191 iph)
at time: 2.508 hrs

---

revised 5-05

Triangular Hydrograph Calculations using

SCSHYDRO Program

Watershed I.D.:
PCWS-3

INPUT SUMMARY

STORM :	WATERSHED :
Dist.= SCS Type `b'	Area = 37.47 acres
Depth = 1.35 inches	CN = 80.00
Duration = 6.0 hrs	Time conc.= 0.13 hrs

OUTPUT SUMMARY

Runoff depth: 0.216 inches
Initial abstr: 0.500 inches
Peak flow: 5.96 cfs (0.158 iph)
at time: 2.537 hrs

Triangular Hydrograph Calculations using

SCSHYDRO Program

Watershed I.D.:
PCWS-4

INPUT SUMMARY

STORM :	WATERSHED :
Dist.= SCS Type `b'	Area = 149.30 acres
Depth = 1.35 inches	CN = 80.00
Duration = 6.0 hrs	Time conc.= 0.24 hrs

OUTPUT SUMMARY

Runoff depth: 0.216 inches
Initial abstr: 0.500 inches
Peak flow: 19.05 cfs (0.127 iph)
at time: 2.632 hrs

Triangular Hydrograph Calculations using

SCSHYDRO Program

Watershed I.D.:
TOPSOIL

INPUT SUMMARY

STORM :	WATERSHED :
Dist.= SCS Type `b'	Area = 0.30 acres
Depth = 1.35 inches	CN = 80.00
Duration = 6.0 hrs	Time conc.= 0.02 hrs

OUTPUT SUMMARY

Runoff depth: 0.216 inches
Initial abstr: 0.500 inches
Peak flow: 0.06 cfs (0.201 iph)
at time: 2.502 hrs

- Drainage Ditch Design -

Assumptions

1) All ditches designed for the 10-yr 6-hr storm event

2) When riprap is required the method presented by Searcy, (1967) will be used (see pg 22)

3) Riprap thickness is two times the D_{50}.

4) A Mannings n of 0.03 will be assumed for bare earth.

5) A Mannings n of 0.035 will be assumed for rocky earth.

6) A Mannings n for riprap channels will be determined using the following equation:

$$n = 0.0456 (D_{50} \times Slope)^{0.159}$$

(Abt. S.R. et.al. 1987)

D_{50} = median riprap size (in)
Slope = (ft/ft)

7) Filter blankets under riprap channels will be 1/2 the riprap thickness

PCWD-1

Contributing watershed is 50% of PCWC-2

$Q_{10-6} = 0.25$ cfs

minimum slope = 1.7 %

maximum slope = 5 %

Triangular ditch

Side slopes = 2:1
Depth = 1'

Max velocity = 2.41 fps No riprap
Max depth = 0.56 ft
freeboard = 0.44 ft

See pages 13+14 for calculation sheets
See page 19 for the figure

PCD-1

Contributing watershed: Depending on final grading upto 78% of the watershed will drain to this ditch
Assume 78 % of PCWS-1

$Q_{10-6} = 0.61$ cfs

minimum slope = 14.3 %

max slope = 36.4 %

Trapizoidal ditch

Bottom Width = 1.25'
Side slope 2:1
Flow is against the berm on one side
Depth = 1 ft

max velocity = 4.93 fps ∴ no riprap
max depth = 0.13 ft
freeboard = 0.87 ft

See pages 17+18 for the calculation sheets
See page 20 for the figure.

Berm Along East side of the site

The site is designed to cause runoff to sheet flow through the gravel on the pad, However, for this design it will be assumed that all runoff estimated in PCD-1 will flow along the berm

$Q_{10-6} = 0.61$ cfs

min slope = 1.3%
max slope = 11.6 %

Triangular ditch

The slope on the berm may be up to 1:1 to promote sheet flow there shouldn't be a slope towards the berm. A Side slope of 10:1 will be assumed.
Depth = Berm Ht. = 1'

max. velocity = 3.33 fps ∴ No Riprap
max depth = 0.28 ft
freeboard. = 0.72 ft

See pages 18a and 18b for calculation sheets.
See page 21a for the figure.

PCD-2

This ditch drains any runoff from from the portal area topsoil stockpile.

$$Q_{10-6} = 0.06 \text{ cfs}$$

minimum slope = 16.7 %
maximum slope = 50 %

Trapizoidal ditch

Bottom width = 1.25'
Side slopes = 2:1
Depth = 1 ft

max velocity = 2.44 fps
max depth = 0.03 ft
freeboard = 0.97 ft

See pages 18c and 18d for calculation sheets
See page 21 for the figure.

PCUD-1 MIN SLOPE
Worksheet for Trapezoidal Channel

Project Description	
Worksheet	Pace Canyon Pc
Flow Element	Trapezoidal Cha
Method	Manning's Form
Solve For	Channel Depth

Input Data		
Mannings Coeffic	0.030	bare earth
Slope	017000	ft/ft
Left Side Slope	2.00	V : H
Right Side Slope	2.00	V : H
Bottom Width	0.00	ft
Discharge	0.25	cfs

Results		
Depth	0.56	ft < 1.0 ft ∴ OK freeboard = 0.44'
Flow Area	0.2	ft²
Wetted Perim	1.25	ft
Top Width	0.56	ft
Critical Depth	0.43	ft
Critical Slope	0.063775	ft/ft
Velocity	1.61	ft/s
Velocity Head	0.04	ft
Specific Energ	0.60	ft
Froude Numb	0.54	
Flow Type	Subcritical	

PCUD-1 MAX SLOPE
Worksheet for Trapezoidal Channel

Project Description	
Worksheet	Pace Canyon Pc
Flow Element	Trapezoidal Cha
Method	Manning's Formı
Solve For	Channel Depth

Input Data		
Mannings Coeffic	0.030	bare earth
Slope	050000	ft/ft
Left Side Slope	2.00	V : H
Right Side Slope	2.00	V : H
Bottom Width	0.00	ft
Discharge	0.25	cfs

Results		
Depth	0.46	ft
Flow Area	0.1	ft²
Wetted Perim	1.02	ft
Top Width	0.46	ft
Critical Depth	0.43	ft
Critical Slope	0.063775	ft/ft
Velocity	2.41	ft/s < 5fps
Velocity Head	0.09	ft
Specific Energ	0.55	ft
Froude Numb	0.89	
Flow Type	Subcritical	

INTENTIONALLY LEFT
BLANK

INTENTIONALLY LEFT
BLANK

revised 1-05

PCD-1 MIN SLOPE
Worksheet for Trapezoidal Channel

Project Description	
Worksheet	Pace Canyon Pc
Flow Element	Trapezoidal Cha
Method	Manning's Form
Solve For	Channel Depth

Input Data		
Mannings Coeffic	0.035	rocky earth
Slope	0.143000	ft/ft
Left Side Slope	2.00	V : H
Right Side Slope	2.00	V : H
Bottom Width	1.25	ft
Discharge	0.61	cfs

Results		
Depth	0.13	ft <1.0' ∴ ok freeboard = 0.87'
Flow Area	0.2	ft²
Wetted Perim	1.53	ft
Top Width	1.38	ft
Critical Depth	0.19	ft
Critical Slope	0.038858	ft/ft
Velocity	3.66	ft/s
Velocity Head	0.21	ft
Specific Energ	0.33	ft
Froude Numb	1.85	
Flow Type	Supercritical	

© Haestad Methods, Inc.
EarthFax Engineering Inc
37 Brookside Road Waterbury, CT 06708 USA (203) 755-1666

PCD-1 MAX SLOPE
Worksheet for Trapezoidal Channel

Project Description	
Worksheet	Pace Canyon Pc
Flow Element	Trapezoidal Cha
Method	Manning's Form
Solve For	Channel Depth

Input Data		
Mannings Coeffic	0.035	rocky earth
Slope	0.364000	ft/ft
Left Side Slope	2.00	V : H
Right Side Slope	2.00	V : H
Bottom Width	1.25	ft
Discharge	0.61	cfs

Results		
Depth	0.10	ft
Flow Area	0.1	ft²
Wetted Perim	1.46	ft
Top Width	1.35	ft
Critical Depth	0.19	ft
Critical Slope	0.038858	ft/ft
Velocity	4.93	ft/s <5.0 fps ∴ no riprap
Velocity Head	0.38	ft
Specific Energ	0.47	ft
Froude Numb	2.87	
Flow Type	Supercritical	

BERM DESIGN MINIMUM SLOPE
Worksheet for Triangular Channel

Project Description	
Worksheet	PACE CANYON
Flow Element	Triangular Char
Method	Manning's Form
Solve For	Channel Depth

Input Data		
Mannings Coeffic	0.030	Bare ground
Slope	013000	ft/ft
Left Side Slope	1.00	H : V
Right Side Slope	10.00	H : V
Discharge	0.61	cfs

Results		
Depth	0.28	ft < 1.0' ∴ ok
Flow Area	0.4	ft²
Wetted Perim	3.16	ft
Top Width	3.03	ft
Critical Depth	0.24	ft
Critical Slope	0.028171	ft/ft
Velocity	1.46	ft/s
Velocity Head	0.03	ft
Specific Energ	0.31	ft
Froude Numb	0.70	
Flow Type	Subcritical	

BERM DESIGN MAXIMUM SLOPE
Worksheet for Triangular Channel

Project Description	
Worksheet	PACE CANYON
Flow Element	Triangular Char
Method	Manning's Form
Solve For	Channel Depth

Input Data		
Mannings Coeffic	0.030	Bare ground
Slope	116000	ft/ft
Left Side Slope	1.00	H : V
Right Side Slope	10.00	H : V
Discharge	0.61	cfs

Results		
Depth	0.18	ft
Flow Area	0.2	ft²
Wetted Perim	2.09	ft
Top Width	2.01	ft
Critical Depth	0.24	ft
Critical Slope	0.028171	ft/ft
Velocity	3.33	ft/s < 5.0 fps ∴ no riprap
Velocity Head	0.17	ft
Specific Energ	0.35	ft
Froude Numb	1.94	
Flow Type	Supercritical	

© Haestad Methods, Inc.
EarthFax Engineering Inc
37 Brookside Road Waterbury, CT 06708 USA (203) 755-1666

18c

PCD-2 MINIMUM SLOPE
Worksheet for Trapezoidal Channel

Project Description	
Worksheet	Pace Canyon
Flow Element	Trapezoidal Cha
Method	Manning's Form
Solve For	Channel Depth

Input Data			
Mannings Coeffic	0.030		bare earth
Slope	167000	ft/ft	
Left Side Slope	2.00	H : V	
Right Side Slope	2.00	H : V	
Bottom Width	1.25	ft	
Discharge	0.06	cfs	

Results			
Depth	0.03	ft	<< 1.0 ft ∴ ok
Flow Area	3.4e-2	ft²	
Wetted Perim	1.37	ft	
Top Width	1.36	ft	
Critical Depth	0.04	ft	
Critical Slope	0.039627	ft/ft	
Velocity	1.74	ft/s	
Velocity Head	0.05	ft	
Specific Energ	0.07	ft	
Froude Numb	1.92		
Flow Type	Supercritical		

PCD-2 MAXIMUM SLOPE
Worksheet for Trapezoidal Channel

Project Description	
Worksheet	Pace Canyon
Flow Element	Trapezoidal Cha
Method	Manning's Form
Solve For	Channel Depth

Input Data		
Mannings Coeffic	0.030	bare ground
Slope	500000	ft/ft
Left Side Slope	2.00	H : V
Right Side Slope	2.00	H : V
Bottom Width	1.25	ft
Discharge	0.06	cfs

Results		
Depth	0.02	ft
Flow Area	2.5e-2	ft²
Wetted Perim	1.34	ft
Top Width	1.33	ft
Critical Depth	0.04	ft
Critical Slope	0.039624	ft/ft
Velocity	2.44	ft/s < 5.0 fps ∴ no riprap
Velocity Head	0.09	ft
Specific Energ	0.11	ft
Froude Numb	3.16	
Flow Type	Supercritical	

© Haestad Methods, Inc.
EarthFax Engineering Inc
37 Brookside Road Waterbury, CT 06708 USA (203) 755-1666

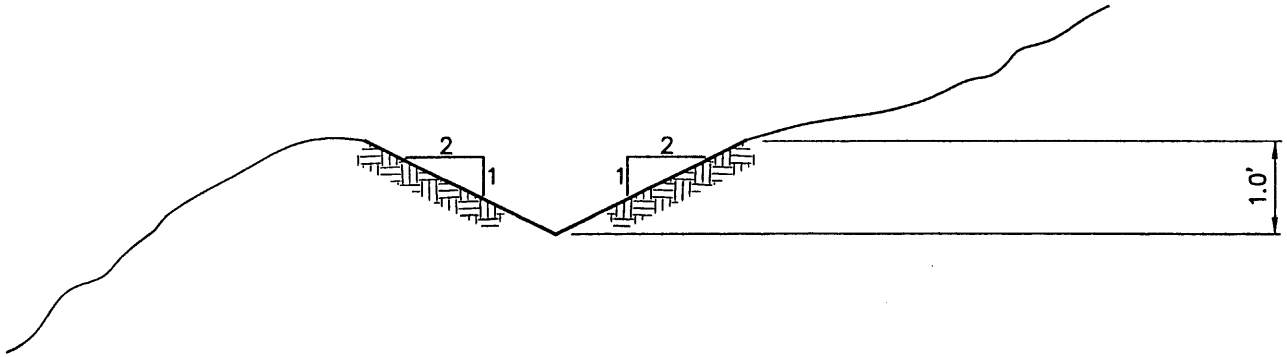

NO SCALE

PCUD-1

EarthFax

G:\UC801\07\HYDROLOGY\FG-PCUD-1.DWG

19

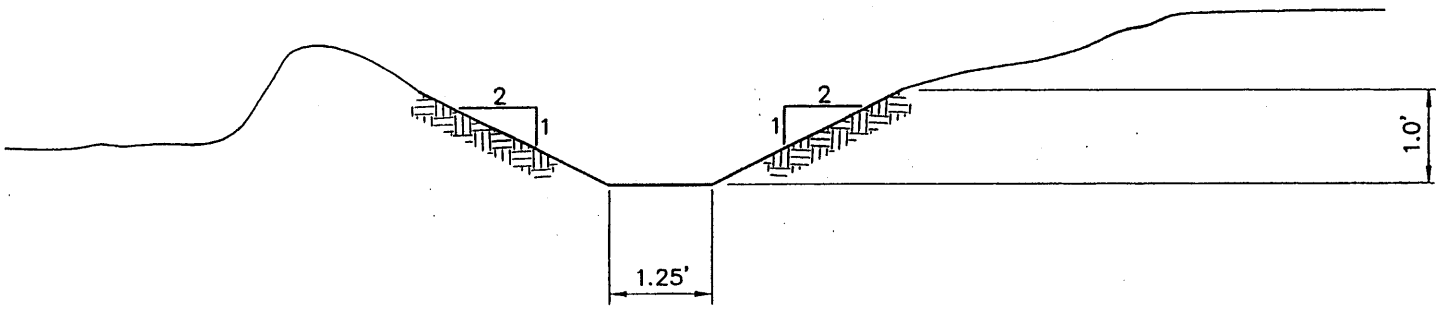

NO SCALE

PCD–1

EarthFax

G:\UC801\07\HYDROLOGY\FG-PCD-1.DWG

revised 1-05

20

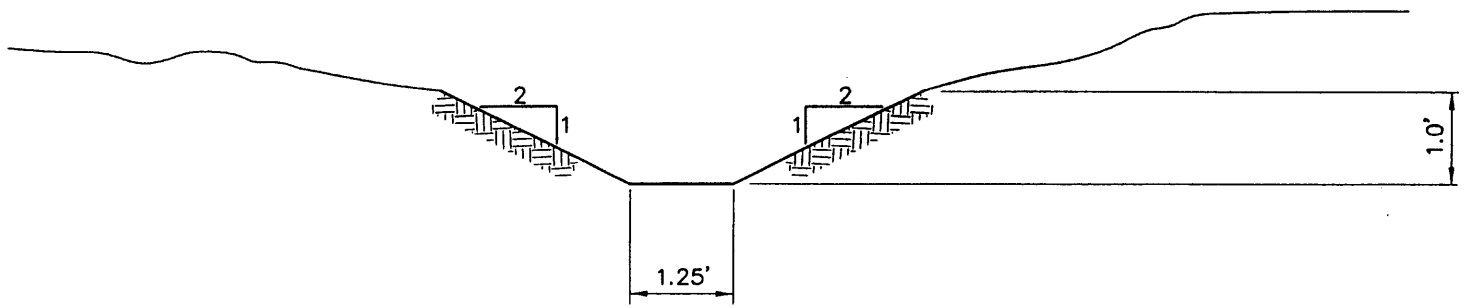

NO SCALE

PCD-2

EarthFax

G:\UC801\12\FIG-PCD-2.DWG

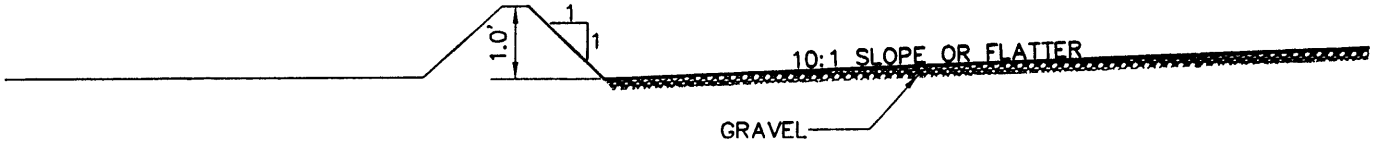

NO SCALE

BERM

EarthFax

G:\UC801\07\HYDROLOGY\FIG-BERM.DWG

719

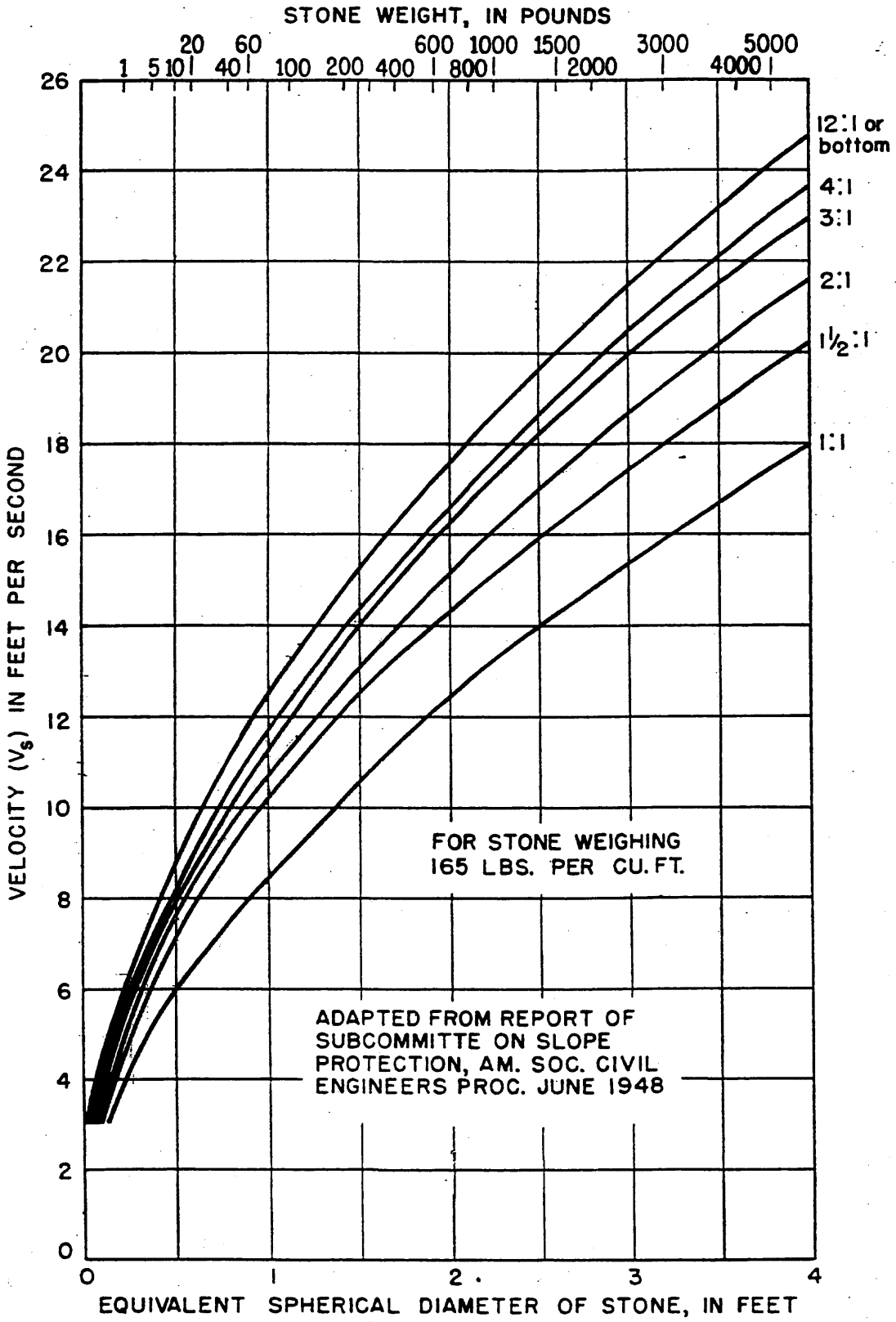

FIG. 2-SIZE OF STONE THAT WILL RESIST DISPLACEMENT FOR VARIOUS VELOCITIES AND SIDE SLOPES

Searcy, J.K. 1967. Use of Riprap for Bank Protection. U.S. Dept. of Transportation, Bureau of Public Roads, U.S Government Printing Office, Washington, D.C.

- Culvert Design -

PCUC-1

All of PCWS-2 will flow into this culvert

$$Q_{10-6} = 0.49 \text{ cfs}$$

The inlet capacity using the nomograph on page 30 indicates a minimum culvert size less than 12"

To minimize the chance of clogging an 18" culvert should be used. Minimum inlet capacity of 5.5 cfs.

Check culvert capacity.

18" CMP
Slope = 7.9 %

See pg 26 for calculation sheet.

Max. depth = 0.18'
Discharge velocity = 4.07 fps
No Riprap required at culvert outlet.

PCUC-2

Contributing Watershed: PCWS-3

$$Q_{10-6} = 5.96 \text{ cfs}$$

The inlet capacity nomograph on page 30 indicates a 21" culvert could handle the design flow.

To add a factor of safety a 24" CMP should be used. Minimum inlet capacity 11 cfs

Check culvert capacity

24" CMP
Slope = 10.7 %

See page 27 for calculation sheet

max depth = 0.52 ft
Discharge velocity = 9.15
outlet riprap required.

Assuming 2:1 side slopes in the channel where the culvert outlets a D_{50} = 12" riprap will resist displacement and dissipate energy. D_{50} = 12" riprap should extend 15' below the culvert.

see pg 22 for riprap figure.

PCUC-3

All of PCWS-4 will flow into this culvert.

$$Q_{10-6} = 19.05 \text{ cfs}$$

The inlet capacity using the nomograph on page 30 indicates a minimum culvert size of 27"

To minimize the chance of clogging and to provide some extra capacity use a 36" culvert which has an inlet capacity of over 30 cfs

Check culvert capacity

36" CMP
Slope = 2.5 %

See page 28 for calculation sheet.

max depth = 1.2' < 3' ok
Discharge velocity = 7.27 fps
Riprap required
Use D_{50} = 6" Riprap at the outlet

Mine Water Discharge Culvert

Flow up to 300 gpm = 0.7 cfs

Water will be pumped out of the mine. Therefore, inlet capacity is not an issue.

Check Culvert Capacity 6" HDPE Culvert.

Slope = 35'/134' = 28.2%

max depth = 0.17' < 0.5' ∴ ok
Discharge velocity = 11.75 fps. Outlet protection required

Place D_{50} = 15" at the culvert outlet

revised 1-05

PCUC-1
Worksheet for Circular Channel

Project Description	
Worksheet	Pace Canyon P
Flow Element	Circular Channe
Method	Manning's Form
Solve For	Channel Depth

Input Data		
Mannings Coeffic	0.024	CMP
Slope	0.079000	ft/ft
Diameter	18	in
Discharge	0.49	cfs

Results		
Depth	0.18	ft
Flow Area	0.1	ft²
Wetted Perime	1.06	ft
Top Width	0.98	ft
Critical Depth	0.26	ft
Percent Full	12.0	%
Critical Slope	0.017527	ft/ft
Velocity	4.07	ft/s < 5.0 fps ∴ no riprap
Velocity Head	0.26	ft
Specific Energy	0.44	ft
Froude Numbe	2.05	
Maximum Disc	17.20	cfs
Discharge Full	15.99	cfs
Slope Full	0.000074	ft/ft
Flow Type	Supercritical	

© Haestad Methods, Inc.
EarthFax Engineering Inc
37 Brookside Road Waterbury, CT 06708 USA (203) 755-1666

PCUC-2
Worksheet for Circular Channel

Project Description	
Worksheet	PACE CANYON·
Flow Element	Circular Channe
Method	Manning's Form
Solve For	Channel Depth

Input Data		
Mannings Coeffic	0.024	
Slope	107000	ft/ft
Diameter	24	in
Discharge	5.96	cfs

Results		
Depth	0.52	ft
Flow Area	0.7	ft²
Wetted Perime	2.14	ft
Top Width	1.76	ft
Critical Depth	0.86	ft
Percent Full	26.1	%
Critical Slope	0.015815	ft/ft
Velocity	9.15	ft/s
Velocity Head	1.30	ft
Specific Energ	1.82	ft
Froude Numbe	2.65	
Maximum Disc	43.12	cfs
Discharge Full	40.08	cfs
Slope Full	0.002366	ft/ft
Flow Type	Supercritical	

outlet riprap required $D_{50} = 12''$

© Haestad Methods, Inc.
EarthFax Engineering Inc
37 Brookside Road Waterbury, CT 06708 USA (203) 755-1666

PCUC-3
Worksheet for Circular Channel

Project Description	
Worksheet	PACE CAYON PORTAL
Flow Element	Circular Channel
Method	Manning's Formula
Solve For	Channel Depth

Input Data	
Mannings Coefficient	0.024
Slope	0.025000 ft/ft
Diameter	36 in
Discharge	19.05 cfs

Results	
Depth	1.19 ft < 3' ok
Flow Area	2.6 ft²
Wetted Perimeter	4.09 ft
Top Width	2.94 ft
Critical Depth	1.40 ft
Percent Full	39.8 %
Critical Slope	0.014132 ft/ft
Velocity	7.27 ft/s > 5 ∴ need riprap at outlet use $D_{50} = 6''$
Velocity Head	0.82 ft
Specific Energy	2.01 ft
Froude Number	1.36
Maximum Discharge	61.45 cfs
Discharge Full	57.12 cfs
Slope Full	0.002781 ft/ft
Flow Type	Supercritical

Mine Water Discharge Culvert
Worksheet for Circular Channel

Project Description	
Worksheet	Portal Canyon
Flow Element	Circular Channel
Method	Manning's Formula
Solve For	Channel Depth

Input Data		
Mannings Coefficient	0.014	HDPE Pipe
Slope	0.282000 ft/ft	
Diameter	6 in	
Discharge	0.70 cfs	

Results		
Depth	0.17 ft	
Flow Area	0.1 ft²	
Wetted Perimeter	0.63 ft	
Top Width	0.47 ft	
Critical Depth	0.42 ft	
Percent Full	34.3 %	
Critical Slope	0.017186 ft/ft	
Velocity	11.75 ft/s	outlet riprap required
Velocity Head	2.15 ft	Place D_{50} = 15 to 18" riprap at outlet
Specific Energy	2.32 ft	
Froude Number	5.85	
Maximum Discharge	2.98 cfs	> 0.7 cfs ∴ ok
Discharge Full	2.77 cfs	
Slope Full	0.018052 ft/ft	
Flow Type	Supercritical	

CHART 5

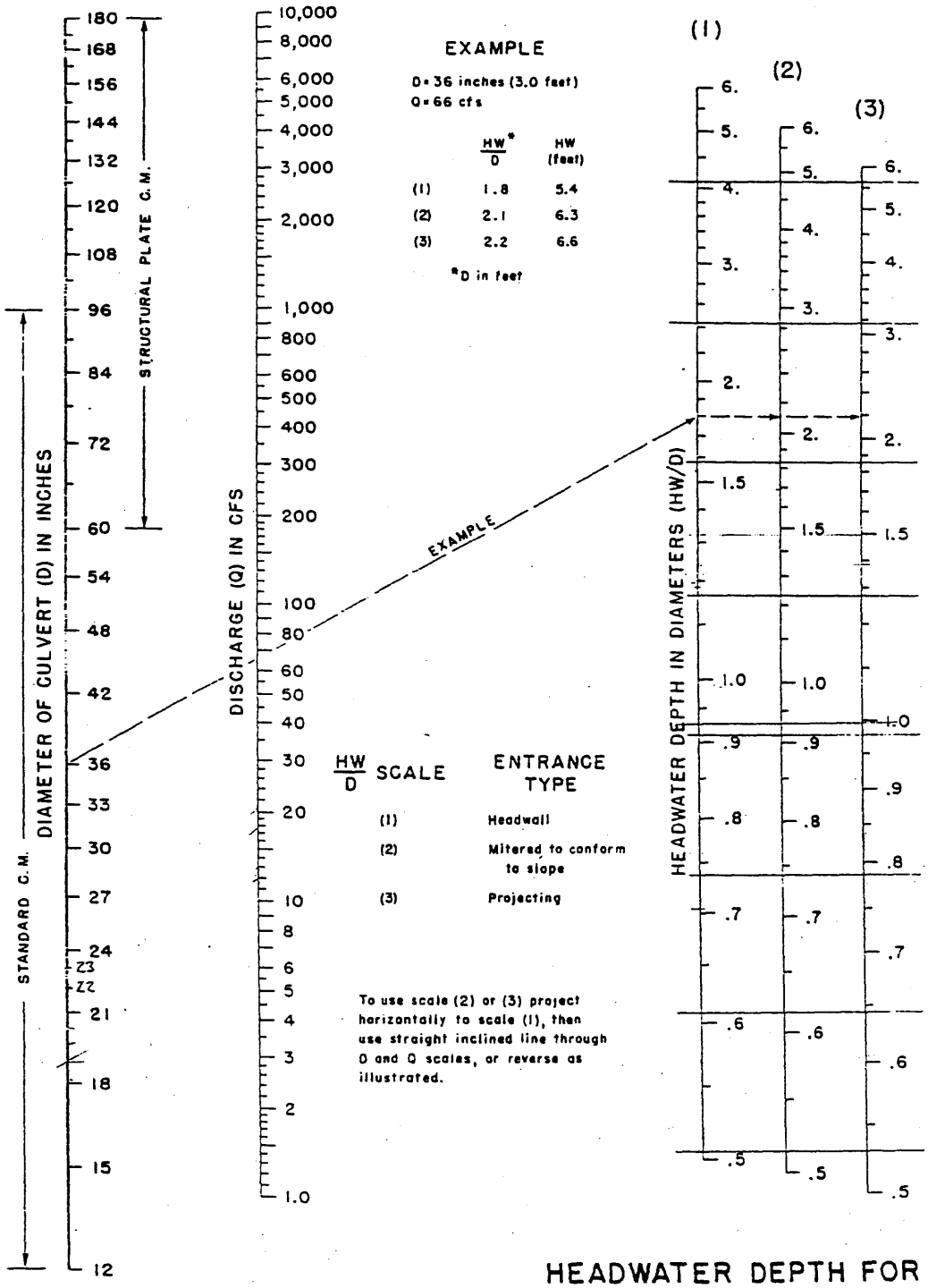

HEADWATER DEPTH FOR C. M. PIPE CULVERTS WITH INLET CONTROL

BUREAU OF PUBLIC ROADS JAN. 1963

Ref (U.S. Dept. of Transportation, 1977)

- Sediment Trap Design -

Sediment control at this site is being acheived using Alternate Sediment Control Measures (ASCM). These ASCMs include contemporaneous reclamation, clean gravel placed on pads and roads, silt fences (during construction) and a sediment trap.

The sediment trap is a part of the ASCM and is not intended to be a sediment pond. Thus, the sediment trap will not be designed as a sediment pond and will not have the capacity of a sediment pond.

The contemporaneous reclamation and gravel should adequately control sediment. The sediment trap will provide an extra measure of protection

Sediment Trap Capacity

elev.	Area (ft^2)	Volume (ft^3)	
6986	55.5		
6987	158.3	106.9	
6988	291.8	225.1	
6989	452.7	372.3	
6990	641.5	547.1	
6991	857	749.3	
6992	1098.8	977.9	spillway elevation
6993	1459.7	1279.3	
6993.5	1500	739.9	
		4997.8 ft^3 = 0.115 Ac-ft	

The runoff depth for the 10-yr 24-hr storm event is 0.66 inches. (see page 33)

Total runoff volume = $(0.66 in / 12 in/ft)(3.03 \text{ Ac}^{\text{PCWS-1 and topsoil stockpile}})(43560 ft^2/ac) = 7259.0 ft^3$

The sediment trap can hold over half of the 10-yr 24-hr storm event if the spillway is plugged.

Although not required as it is for a sediment pond the sediment trap's spillway will be designed to pass the 25-yr 6-hr storm event.

Q_{25-6} = 1.39 cfs (see page 32)

revised 5-05

Triangular Hydrograph Calculations using

SCSHYDRO Program

Watershed I.D.:
PCWS-1 AND TOPSOIL STOCKPILE 25-YEAR 6-HOUR

INPUT SUMMARY

STORM :	WATERSHED :
Dist.= SCS Type `b'	Area = 3.03 acres
Depth = 1.65 inches	CN = 83.00
Duration = 6.0 hrs	Time conc.= 0.04 hrs

OUTPUT SUMMARY

Runoff depth: 0.468 inches
Initial abstr: 0.410 inches
Peak flow: 1.39 cfs (0.457 iph)
at time: 2.505 hrs

Triangular Hydrograph Calculations using

SCSHYDRO Program

Watershed I.D.:
PCWS-1 10-YEAR 24-HOUR

INPUT SUMMARY

STORM :	WATERSHED :
Dist.= SCS Type II	Area = 1.93 acres
Depth = 1.95 inches	CN = 83.00
Duration = 24.0 hrs	Time conc.= 0.05 hrs

OUTPUT SUMMARY

Runoff depth: 0.661 inches
Initial abstr: 0.410 inches
Peak flow: 1.42 cfs (0.729 iph)
at time: 12.006 hrs

Spillway Design, (PCDC-1)

Q_{25-6} = 1.39 cfs
Use an 18" CMP.

Inlet capacity = 5.5 cfs (pg 30)

Slope = 8/33 = 24.2 %

Outlet Velocity = 8.24 fps

Requires Riprap Use D_{50} = 9" for outlet protection

revised 5/05

PCDC-1 SED TRAP SPILLWAY
Worksheet for Circular Channel

Project Description	
Worksheet	PACE CANYON
Flow Element	Circular Channe
Method	Manning's Form
Solve For	Channel Depth

Input Data		
Mannings Coeffic	0.024	
Slope	242000	ft/ft
Diameter	18	in
Discharge	1.39	cfs

Results		
Depth	0.23	ft
Flow Area	0.2	ft²
Wetted Perime	1.20	ft
Top Width	1.08	ft
Critical Depth	0.44	ft
Percent Full	15.2	%
Critical Slope	0.016692	ft/ft
Velocity	8.24	ft/s
Velocity Head	1.05	ft
Specific Energ	1.28	ft
Froude Numbe	3.67	
Maximum Disc	30.11	cfs
Discharge Full	27.99	cfs
Slope Full	0.000597	ft/ft
Flow Type	Supercritical	

> 5.0 fps ∴ riprap is required
use $D_{50} = 9''$

© Haestad Methods, Inc.
EarthFax Engineering Inc
37 Brookside Road Waterbury, CT 06708 USA (203) 755-1666

- Topsoil Stockpiles Sediment Control -

A berm will be constructed around both topsoil stockpiles. The berm around the shaft topsoil stockpile will be a total containment berm, and will contain the entire 10-yr 24-hr storm event. The size and topography of the portal topsoil stockpile make a total containment berm unreasonable. The entire stockpile will be surrounded by a berm to direct runoff through a silt fence. (See pg 38 for further discussion)

Rainfall depth = 1.95" (10-yr 24-hr)

Although the topsoil stockpiles will be revegetated a bare earth condition will be assumed for runoff volume calcs. A Hydrologic soil group of D will be assumed.

CN = 89 (Dirt Road)

$$\text{Runoff depth} = \frac{(P - 0.2S)^2}{P + 0.8(S)}$$

$$S = 1000/CN - 10 = \frac{1000}{89} - 10 = 1.236$$

$$\text{Runoff depth} = \frac{(1.95 - 0.2(1.236))^2}{1.95 + 0.8(1.236)} = \frac{2.8995}{2.9388} = 0.99''$$

<u>Shaft Topsoil stockpile</u>

Topsoil stockpile area above shaft = 5193 ft²

Runoff Volume = (5193 ft²)(0.99/12) = 428.4 ft³

$$\text{Area} = \overset{A}{(2.7)(3.3)} + \overset{B}{2(\tfrac{1}{2}(2.7 \times 2.7)} + \overset{C}{\tfrac{1}{2}(3 \times 0.3)} + \overset{D}{\tfrac{1}{2}(0.3 \times 0.3)} = 16.7 \text{ ft}^2$$

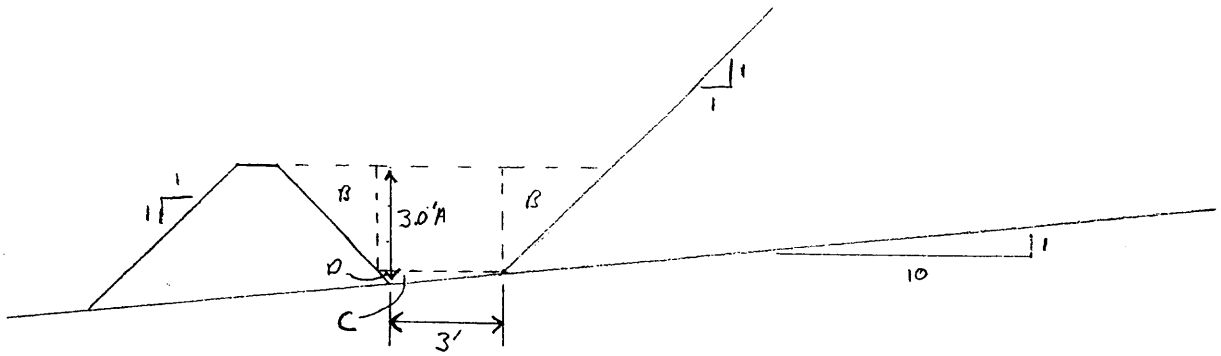

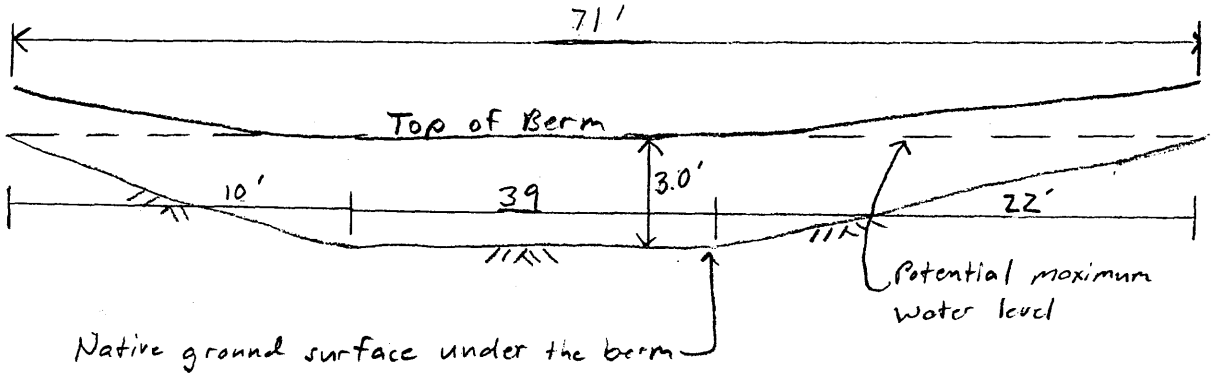

Berm length retaining runoff = 71'

Containment Volume = $(16.7\ ft^2)(39) + \frac{1}{2}(10')(16.7\ ft^2) + \frac{1}{2}(22)(16.7\ ft^2)$

$= 651 + 83.5 + 183.7 = 918.2\ ft^3$

Required containment = $428.4\ ft^3 < 918.2\ ft^3$ ∴ OK

A 3.0' tall berm should be constructed on the lower part of topsoil stockpile. The berm along the road and in the higher areas only needs to be about 1' tall.

Portal topsoil stockpile

This topsoil stockpile will be built with 2:1 side slopes. The stockpile will also be gouged and seeded. Deep gouging has been demonstrated to nearly eliminate sediment loss. In addition to the gouging and seeding the stockpile will be surrounded by a berm. The berm will prevent runoff from upgradient areas from eroding the stockpile as well as directing runoff from the pile through a silt fence. The silt fence will keep any eroded topsoil within the bermed area. The small amount of runoff from the stockpile will be directed to the sediment trap via ditch PCD-2.

The berm should be at least 1 foot tall except on the lower portions where it should be 2' tall to insure all runoff flows through the silt fence.

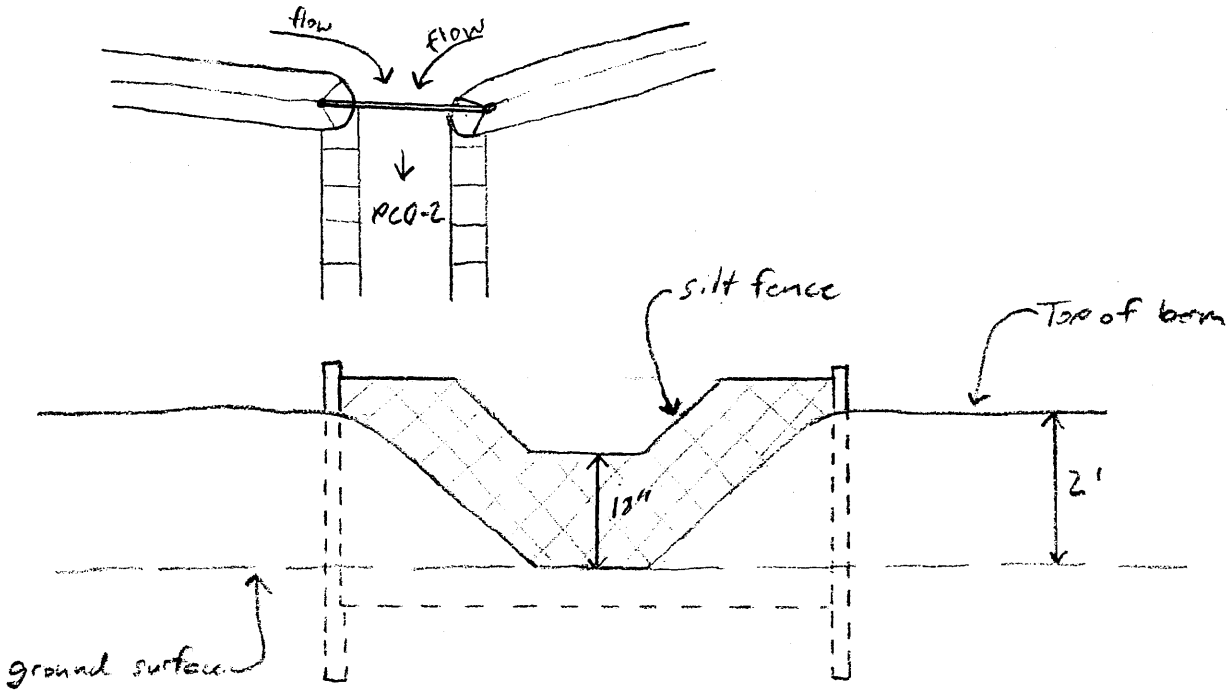

Water Bar Design

Three water bars have been specified. The location of the water bars can be seen on Plate PC7-5. Three water bars have been specified to minimize the amount of runoff flowing down the road.

The water bars should be constructed such that:

- The water bar allows runoff to flow completely off the road into a vegetated or stabilized area;
- The slope off the road should be greater than 1% but not more than 3%;
- The slope leading upto the water bar and down into the water bar should not exceed 5:1;
- The depth of the water bar should be 6".

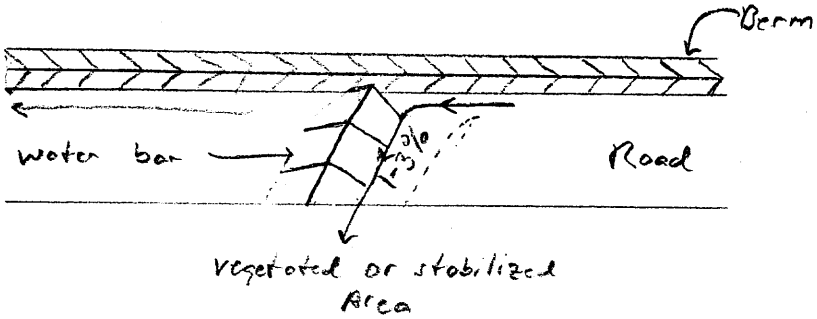

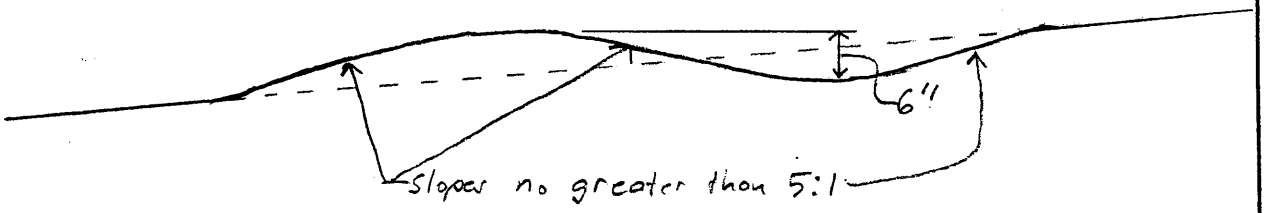

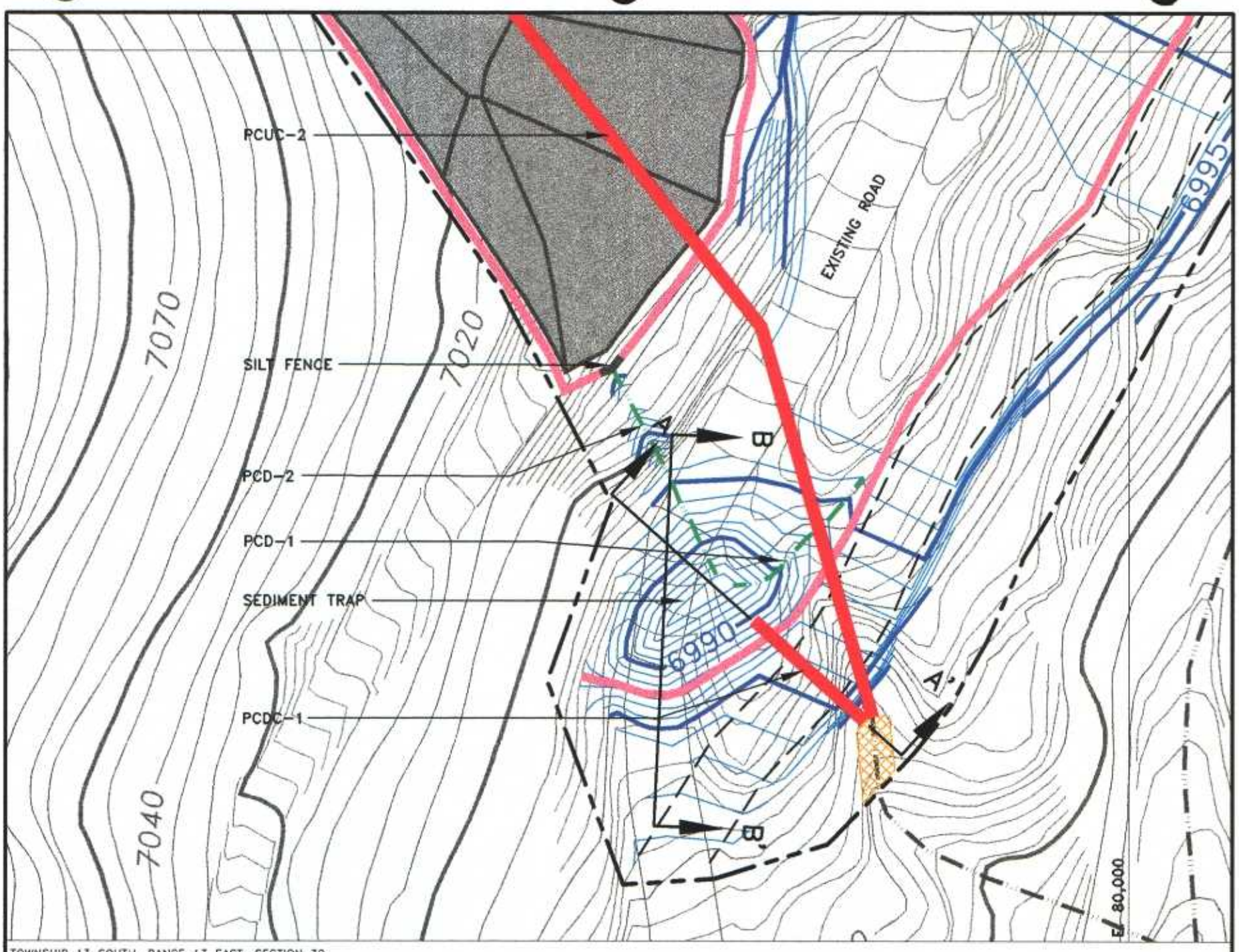

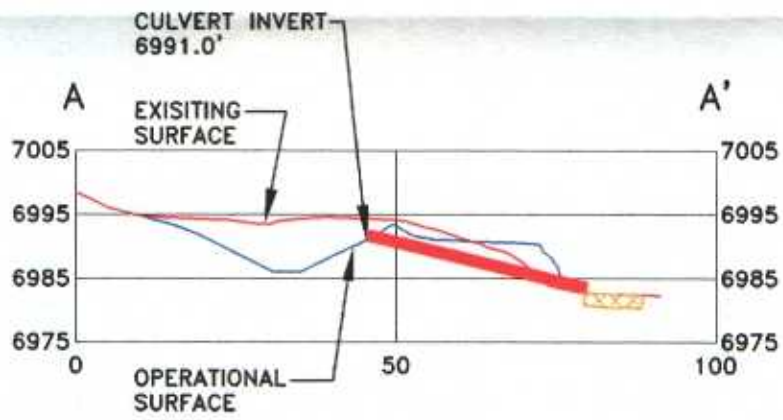

SECTION A–A'

HORZ: 1"=30'
VERT: 1"=30

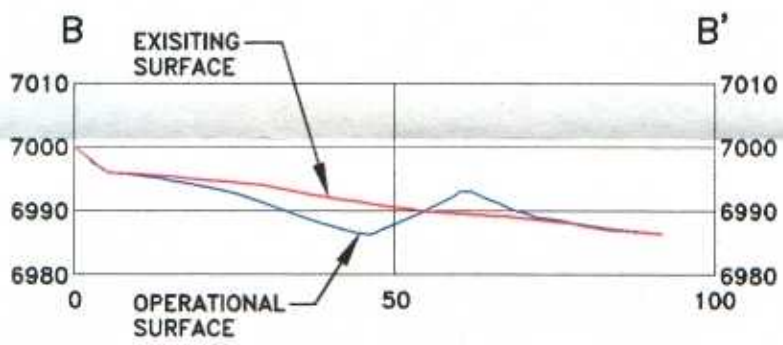

SECTION B–B'

HORZ: 1"=30'
VERT: 1"=30

RECEIVED
MAY 27 2005
DIV. OF OIL, GAS & MINING

LEGEND

CULVERT

RIPRAP

TOPOGRAPHY FROM OLYMPUS AERIAL SURVEYS INC.
FLOWN 08-12-04

PROFESSIONAL ENGINEER
No. 180307
LAYNE D. JENSEN
5-27-05
REGISTERED
STATE OF UTAH

REVISIONS OR UP-DATES			DATE: 12-13-04	
NO.	DATE	BY	DESIGNED BY:	LDJ
1	1-26-05	LDJ	DRAWN BY:	SWF
2	3-30-05	LDJ	CHECKED BY:	VSM
3	5-05-05	LDJ		
			SCALE:	1"=30'

FILENAME: S:\UGB01\12\DWG\APRIL\MAPS\PLATE7-4.DWG\12-13-04

Canyon Fuel Company, LLC
Dugout Canyon Mine

PACE CANYON FAN SEDIMENT TRAP DETAIL AND CROSS SECTIONS

P.O BOX 1029
WELLINGTON, UTAH 84542

DRAWING OR MAP NUMBER
PLATE PC7-4

EarthFax Engineering, Inc.

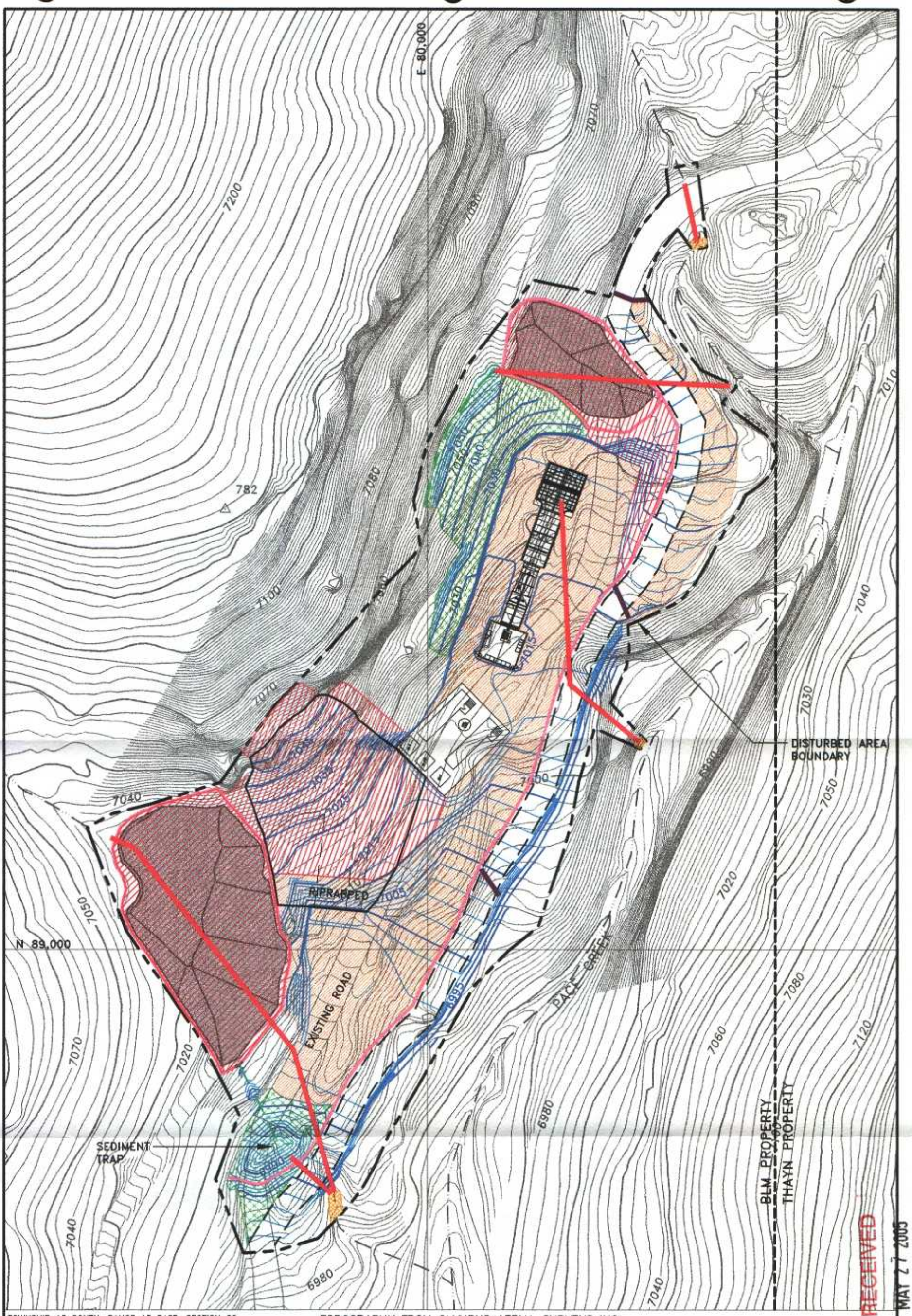

TOWNSHIP 13 SOUTH, RANGE 13 EAST, SECTION 30

TOPOGRAPHY FROM OLYMPUS AERIAL SURVEYS INC.
FLOWN 08-12-04

LEGEND

- AREAS TO BE DEEP GOUGED, MULCHED AND HYDROSEEDED
- AREAS TO BE MULCHED AND HYDROSEEDED
- GRAVEL OR RIPRAP
- CULVERT

REGISTERED PROFESSIONAL ENGINEER No. 166797 LAYNE D. JENSEN STATE OF UTAH 11-27-05

REVISIONS OR UP-DATES			DATE: 11-18-04	
NO.	DATE	BY	DESIGNED BY:	LDJ
1	1-26-05	LDJ	DRAWN BY:	SWF
2	3-20-05	LDJ	CHECKED BY:	VSM
3	5-09-05	LDJ		
			SCALE: 1"=50'	

FILENAME: S:\1080\12_DWG\APM\MAPS\PLATE7-5A.DWG\11-18-04

Canyon Fuel Company, LLC
Dugout Canyon Mine

PACE CANYON FAN SEDIMENT CONTROL MAP AND CONTEMPORANEOUS RECLAMATION TREATMENTS

P.O BOX 1029
WELLINGTON, UTAH 84542

DRAWING OR MAP NUMBER
PLATE PC7-5A

EarthFax Engineering, Inc.

RECEIVED
MAY 27 2005
DIV. OF OIL, GAS & MINING

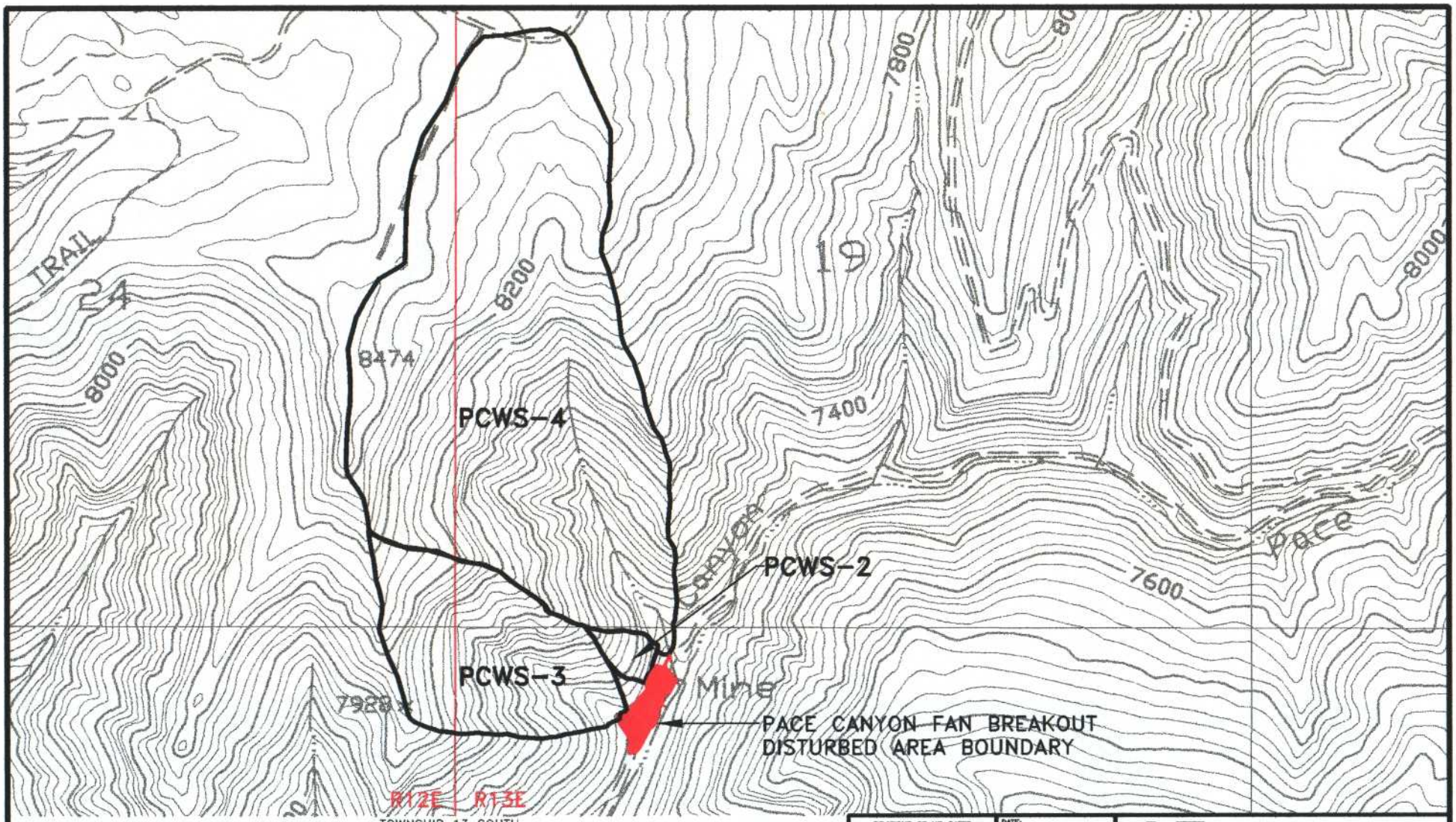

LEGEND

PACE CANYON UNDISTURBED WATERSHED BOUNDARY

RECEIVED
MAY 27 2005
DIV. OF OIL, GAS & MINING

REGISTERED PROFESSIONAL ENGINEER No. 166797 LAYNE D. JENSEN STATE OF UTAH
5-26-05

REVISIONS OR UP-DATES			DATE: 11-17-04	
NO.	DATE	BY	DESIGNED BY:	LDJ
1	1-28-05	LDJ	DRAWN BY:	SWF
2	5-06-05	LDJ	CHECKED BY:	VSM
			SCALE:	1"=1000'

FILENAME: G:\UC801\07\DWG\APRIL MAPS\PLATE7-6.DWG\11-21-04

Canyon Fuel Company, LLC
Dugout Canyon Mine

PACE CANYON FAN UNDISTURBED WATERSHED BOUNDARIES

P.O BOX 1029
WELLINGTON, UTAH 84542

DRAWING OR MAP NUMBER
PLATE PC7-6

EarthFax Engineering, Inc.