FILE IN Expandable 11072006
Refer to Record No. 0092
in C0070039, 2006, Incoming
for additional information

REFUSE PILE AMENDMENT

DUGOUT CANYON MINE

C/007/039

FEBRUARY 2003

Canyon Fuel Company, LLC
P.O. Box 1029
Wellington, UT 84542

VOLUME 1
CHAPTERS 1 - 5

CHAPTER 1

LEGAL, FINANCIAL, COMPLIANCE AND RELATED INFORMATION

M&RP

Section 28: NW1/4, N1/2SW1/4, SW1/4SW1/4
Section 29: All
Section 30: E1/2, E1/2W1/2

Waste Rock Storage Facility
T. 14 S., R. 12 E., SLBM, Utah (Approximately 26.8 acres)
Section 18: Portions of NE1/4, SW1/4 and SE1/4 of the NE1/4

All of Lease ML-42648, except the E1/2 of Section 8 and the NE1/4 of Section 17, is included within the Dugout Canyon Mine permit boundary. However, only the S1/2 SE1/4 of Section 9 from Lease ML-42649 is within the permit boundary. The ten acres described in UTU-76601 are also described in UTU-77985. The U.S. Department of Interior, Bureau of Land Management (BLM) right-of-way application UTU-76601 is included in Appendix 1-3.

The disturbed area encompasses 20.31 acres (Mine Facility area, including Gilson well pad and small substation),12.85 acres (G-2, G-3, G-4, G-5, G-6, G-7, G-9, G-10, G-11 and G-12 Degas Well), 1.8 acres (Leach field/pipeline area), 2.7 acres (Pace Canyon Fan Facility) and 26.8 acres (Refuse Pile area) totaling approximately 64.5 acres. That acreage includes a pre- and post mining road with an area of 1.6 acres and 2.03 acres of undisturbed land within the mine facilities disturbed area and 11.2 acres within the refuse pile disturbed area.

The permit boundary encompasses approximately 9,471 acres which includes the following surface ownership and acreage: 10 acres in the BLM right-of-way, approximately 567 acres of other federal lands, 920 acres of state lands, and fee acreage of approximately 7,974 acres (Plate 1-1 and RA Plate 1-1).

Coal ownership acreage within the permit area includes approximately 2,804 acres of federal coal, approximately 5840 acres of state coal, and 827 acres of fee coal (Plate 1-2 and RA1-1B). Approximately 745 acres which include the surface subsidence area, refuse pile and leach field areas will not be mined although their acreage is included in the surface and coal ownership acreage totals.

REFUSE PILE AMENDMENT

PUT IN SEPARATE BINDER SPECIFIC TO REFUSE PILE AMENDMENT

DO NOT PLACE INFORMATION IN THE "M&RP BINDERS"

CHAPTER 1

LEGAL, FINANCIAL, COMPLIANCE AND RELATED INFORMATION

TABLE OF CONTENTS

Section — Page

CHAPTER 1 1-1

110 MINIMUM REQUIREMENTS FOR LEGAL, FINANCIAL, COMPLIANCE AND RELATED INFORMATION 1-1

111 Introduction 1-1
112 Identification of Interests 1-1
112.100 Business Entity 1-1
112.200 Applicant and Operator 1-2
112.300 Officers of the Applicant 1-2
112.400 Coal Mining and Reclamation Operation Owned or Controlled . . . 1-2
112.500 Legal or Equitable Owner of the Surface and Mineral Properties . 1-2
112.600 Owners of Record of Property Contiguous to Proposed Permit Area 1-3
112.700 MSHA Numbers 1-3
112.800 Interest in Contiguous Lands 1-3
112.900 Certification of Submitted Information 1-4
113 Violation Information 1-4
114 Right-of-Entry Information 1-4
115 Status of Unsuitability Claims 1-4
116 Permit Term 1-4
117 Insurance, Proof of Publication, and Facilities and Structures Used in Common 1-5
118 Filing Fee 1-5

120 PERMIT APPLICATION FORMAT AND CONTENTS 1-5

130 REPORTING OF TECHNICAL DATA 1-5

140 MAPS AND PLANS 1-5

150 COMPLETENESS 1-6

TABLE OF CONTENTS (Continued)

LIST OF FIGURES

Page

RA Figure 1-1A Refuse Pile Location Map 1-6
RA Figure 1-1B Surface and Coal Ownership Map 1-7

LIST OF ATTACHMENTS

RA Attachment 1-1 Documents and Correspondence

LIST OF PLATES

RA Plate 1-1 Dugout Canyon Mine Permit Area

CHAPTER 1

LEGAL, FINANCIAL, COMPLIANCE AND RELATED INFORMATION

110 MINIMUM REQUIREMENTS FOR LEGAL, FINANCIAL, COMPLIANCE AND RELATED INFORMATION

111 Introduction

The refuse pile will be located on property owned by Canyon Fuel Company, LLC. The property is located in the N 1/2 of the NE 1/4 of Section 18, T14S, R12E. The site is located approximately 6.5 miles southwest of the Dugout Canyon Mine adjacent to the Carbon County road accessing the mine (see Figures 1-1A and 1-1B).

112 Identification of Interests

For information pertaining to this section(s) refer to the General Chapter 1 binder for Canyon Fuel Company, LLC, Dugout Canyon Mine, Soldier Canyon Mine and Banning Loadout operations.

112.100 Business Entity

For information pertaining to this section (s) refer to the General Chapter 1 binder for Canyon Fuel Company, LLC, Dugout Canyon Mine, Soldier Canyon Mine and Banning Loadout operations.

112.200 Applicant and Operator

For information pertaining to this section (s) refer to the General Chapter 1 binder for Canyon Fuel Company, LLC, Dugout Canyon Mine, Soldier Canyon Mine and Banning Loadout operations.

112.300 Officers of the Applicant

For information pertaining to this section (s) refer to the General Chapter 1 binder for Canyon Fuel Company, LLC, Dugout Canyon Mine, Soldier Canyon Mine and Banning Loadout operations.

112.400 Coal Mining and Reclamation Operation Owned or Controlled

. For information pertaining to this section (s) refer to the General Chapter 1 binder for Canyon Fuel Company, LLC, Dugout Canyon Mine, Soldier Canyon Mine and Banning Loadout operations.

112.500 Legal or Equitable Owner of the Surface and Mineral Properties

The legal and equitable owner of the surface property to be affected by this mining operation during the duration of the permit period is Canyon Fuel Company, LLC.

Canyon Fuel Company, LLC
225 North 5th Street, 9th Floor
Grand Junction, CO 81501

The legal and equitable owner of the mineral property to be affected by this mining operation during the duration of the permit period is United States of America.

United States of America
Department of Interior
Bureau of Land Management
Price Coal Office
125 South 600 West
Price, Utah 84501

Reference Plates1-2 and 1-3 in the M&RP and RA Figure 1-1B of this amendment for ownership information.

112.600 Owners of Record of Property Contiguous to Proposed Permit Area

Owners of record for surface and mineral properties contiguous to the proposed permit area are listed below.

United States of America
Department of Interior
Bureau of Land Management
Price Coal Office
125 South 600 West
Price, Utah 84501

In addition, Canyon Fuel owns properties contiguous to the refuse pile permit area. Surface ownership along the county road is shown on Plates 1-2, 1-3 in the M&RP and RA Figure 1-1B of this amendment.

112.700 MSHA Numbers

MSHA No. 1211-UT-09-01890-01 Dugout Canyon Mine Refuse Pile.
For other MSHA numbers refer to the approved M&RP.

112.800 Interest in Contiguous Lands

Canyon Fuel Company has no interest in contiguous lands other than those currently owned as shown on Plate 1-3 of the approved M&RP.

112.900 Certification of Submitted Information

Refer to the approved M&RP.

113 Violation Information

For information pertaining to this section (s) refer to the General Chapter 1 binder for Canyon Fuel Company, LLC, Dugout Canyon Mine, Soldier Canyon Mine and Banning Loadout operations.

114 Right-of-Entry Information

The Applicant, Canyon Fuel Company, LLC, owns the property on which the refuse pile and borrow area will be placed. The applicant bases their legal right to enter and begin coal mining and reclamation operations on the Warranty Deed, Contract # SC-023, Exhibit C (No. 801673), Page 270, dated 9/1/91. This deed includes both the refuse pile site and the borrow area (T14S R12 E, Section 17: NW1/4SW1/4; NW1/4; E1/2SW1/4;SE1/4, Section 18: E1/2NE1/4). Refer to the approved M&RP for additional information.

115 Status of Unsuitability Claims

Refer to the approved M&RP.

116 Permit Term

Refer to the approved M&RP.

117 Insurance, Proof of Publication, and Facilities and Structures Used in Common

The certificate of insurance(s) and the newspaper advertisement and the verification of the advertisement appearing in the appropriate newspapers will be included in Appendix 1-2 of the approved M&RP and refer to the General Chapter 1 binder for Canyon Fuel Company, LLC prepared for the Dugout Canyon Mine, Soldier Canyon Mine and Banning Loadout operations for additional information.

The refuse pile site will have no facilities or structures.

118 Filing Fee

Refer to the approved M&RP.

120 PERMIT APPLICATION FORMAT AND CONTENTS

Refer to the approved M&RP.

130 REPORTING OF TECHNICAL DATA

Refer to the approved M&RP.

140 MAPS AND PLANS

The maps and plans in the Mining and Reclamation Plan will correspond with the requirements in R645-301-140.

150 COMPLETENESS

CFC believes the information in this permit application to be complete and correct.

CHAPTER 2

SOILS

TABLE OF CONTENTS

Section — Page

CHAPTER 2 2-1

210 INTRODUCTION 2-1

220 ENVIRONMENTAL DESCRIPTION 2-1

221 Prime Farmland Investigation 2-1
222 Soil Survey 2-2
222.100 Soils Map 2-2
222.200 Soil Identification 2-2
222.300 Soil Description 2-3
222.400 Soil Productivity 2-3
223 Soil Characterization 2-5
224 Substitute Topsoil 2-5

230 OPERATION PLAN 2-6

231 General Requirements 2-6
231.100 Removing and Storing Soil Methods 2-6
231.200 Suitability of Topsoil Substitutes/Supplements 2-7
231.300 Testing of Topsoil Handling and Reclamation Procedures Regarding Revegetation 2-7
231.400 Construction, Modification, Use, and Maintenance of Topsoil Storage Piles 2-7
232 Topsoil and Subsoil Removal 2-7
232.100 Topsoil Removal and Segregation 2-7
232.200 Poor Topsoil 2-8
232.300 Thin Topsoil 2-8
232.400 Minor Disturbances Not Requiring Topsoil Removal 2-8
232.500 Subsoil Segregation 2-9
232.600 Timing 2-9
232.700 Topsoil and Subsoil Removal Under Adverse Conditions . . . 2-9
233 Topsoil Substitutes and Supplements 2-9
233.100 Overburden Materials Supplementing and/or Replacing Topsoil 2-9
233.200 Suitability of Topsoil Substitutes and Supplements 2-10
233.300 Physical and Chemical Analyses 2-11
233.400 Testing of Substitute Topsoil 2-12
234 Topsoil Storage 2-12

TABLE OF CONTENTS (Continued)

Section — Page

234.100 Topsoil Stockpiling 2-12
234.200 Stockpiled Topsoil 2-13
234.300 Topsoil Stockpile Relocation 2-14

240 RECLAMATION PLAN 2-15

241 General Requirements 2-15
242 Soil Redistribution 2-15
242.100 Soil Redistribution Practices 2-15
242.200 Regrading 2-17
242.300 Topsoil Redistribution on Impoundments and Roads 2-18
243 Soil Nutrients and Amendments 2-18
244 Soil Stabilization 2-19
244.100 Protection and Stabilization of Surface Areas 2-19
244.200 Mulch Application 2-19
244.300 Rills and Gullies 2-19

250 PERFORMANCE STANDARDS 2-20

251 Topsoil, Subsoil, and Topsoil Supplements Management 2-20
252 Stockpiled Topsoil and Subsoil 2-20

REFERENCES 2-21

LIST OF TABLES

Table 2-1 Soil Map Unit Features 2-22
Table 2-2 Soil Salvage Volumes 2-23

LIST OF PLATES

RA Plate 2-1 Soils Map
RA Plate 2-2 Soil Stockpiles

LIST OF ATTACHMENTS

RA Attachment 2-1 Soils Report
RA Attachment 2-2 Soil Volume Calculations
RA Attachment 2-3 Soil Borrow Area

CHAPTER 2
SOILS

210 INTRODUCTION

This chapter and associated appendices address the data required for the refuse pile site for the Dugout Canyon Mine. The M&RP and this document contain pertinent information relating to identification, management, and reclamation activities associated with the soil resources present in the disturbed area of the Dugout Canyon Mine. The soil studies were conducted in accordance with the Utah Division of Oil, Gas, and Mining guidelines that were in effect at the time each study was conducted. The site specific soil survey conducted for this permit application was conducted in accordance with the standards set by the National Cooperative Soil Survey and analyzed according to Table 1 of the Division's "Guidelines for the Management of Topsoil and Overburden for Underground and Surface Coal Mining" (Leatherwood and Duce, 1988).

220 ENVIRONMENTAL DESCRIPTION

The site is located at an elevation of about 5,900 feet on a well-drained bench (pediment) composed of gravelly to stony alluvial deposits, which overlie the Mancos Shale formation. Pinyon-Juniper, sagebrush, and various grasses are the dominant vegetation in the area. Climatological information is provided in RA Attachment 7-5.

221 Prime Farmland Investigation

Refer to a letter included in RA Attachment 3-1, which states that the area of the Dugout Canyon Road cannot be considered as prime farmland and the refuse pile area is immediately adjacent to the road.

222 Soil Survey

222.100 Soils Map

A description of the soils within the refuse pile area on an Order III soil survey level can be found in the SCS "Soil Survey of the Carbon County Area" (Jensen, 1988). A copy of the soil descriptions from the Order III survey has been included in Appendix S-5 of RA Attachment 2-1. Information pertaining to the soils associated with the construction of the sediment pond emergency spillway is included in RA Attachment 2-1 once the data was collected and reported by soil scientist Dan Larsen. No disturbance to the spillway area soils will occur until the information has been collected for incorporated into the attachment, including soil descriptions and estimated salvage quantities.

An Order I soil survey was conducted of the refuse pile site in September 1999. Descriptions of the site soils are derived from ten pit locations and twenty-two soil samples. Based on the soil descriptions and other site observations, thirteen soil map units have been identified. The map units are shown on RA Plate 2-1 and in RA Attachment 2-1. The locations of the soil test pits excavated during the survey are shown on Map SM-1, RA Attachment 2-1.

222.200 Soil Identification

Following is a list of the soils found in the general area of the storage area as mapped by the SCS (Jensen, 1988).

Map Unit	Soil Identification
33	Gerst-Badland-Rubbleland complex, 15 to 50 percent slopes,
48	Haverdad loam, 1 to 8 percent slopes,
49	Haverdad loam, alkali, 0 to 3 percent slopes,
50	Haverdad loam, moist, 1 to 5 percent slopes,
66	Mivida gravelly fine sandy loam, 3 to 8 percent slopes

113 Strych stony loam, 3 to 15 percent slopes.

The SCS descriptions for the soils are included in Appendix S-5 of Attachment 2-1.

222.300 Soil Description

The description of the soils is based on the following information: taxonomic classification, horizon name and depth, color, texture (percent sand, silt, and clay), consistence, structure, percent rock fragments and organic matter, saturation, pH, EC, SAR, and solubility of calcium, magnesium, and sodium. This information is included in the soil test pit logs in Attachment 2-1, Appendix S1 and the lab data sheets included in Attachment 2-1, Appendix S3 of this submittal. RA Table 2-1 presents a summary of the soil unit features. The description of soils outside the disturbed area boundary has been taken from the SCS (Jensen, 1988).

The site has gravelly and cobbly soils of the Strych series over much of the area (Jensen, 1988). The project area is primarily disturbed with little evidence of natural soils in place. Original surface soils were stripped by previous site activities. Therefore, the natural soils are basically lacking except at the edges of the site and outside the disturbed area boundary. The remaining soil materials generally consist of coarse alluvium of varying thickness covering the Mancos Shale. In some places the shale is at or near the surface.

222.400 Soil Productivity

The data obtained from soil testing are provided in Appendix S3 of Attachment 2-1. A table showing depth and the number of samples taken from each backhoe pit location (Soil Pits DCW1 through DCW10) can be found in Appendix S3.

A summary of the soil testing results and ratings are provided below:

PH - All samples rated good, with a range of 6.9 to 7.8.

% Saturation - 17 samples rates good (25.1 to 45.3) and 5 samples rated fair (21.6 to 24.9).
Electrical Conductivity - 17 samples rates good (0.038 to 1.93 umhos/cm) and 5 samples rated fair (2.12 to 4.68 umhos/cm).
Sodium Adsorption Ratio - 20 sampled rated good (0.56 to 3.71) and 2 samples rated fair (4.64 and 6.03).
Texture - 12 samples rated good (loam and sandy clay loam) and 10 samples rated fair (clay loam and silty clay loam)
Available Water Capacity - 6 samples rated good (0.11 to 0.14 inches per inch) and 16 samples rated fair (0.05 to 0.10 inches per inch)
Boron - All samples rated good (0.05 to 0.50 ppm)
Selenium - All samples rated good (0.02 ppm or less)
Acid/Base Potential - All samples rated good (90.0 to 282 0 T/1000 tons)

Tests not used in the UDOGM rating criteria indicated low phosphorus, nitrogen, and sulfur levels. Calcium carbonate content is relatively high, with a range of 9.3 to 26.9 percent. Organic matter is low although there are pockets of woody materials in various sample locations. The soils were determined to be acceptable for use in site reclamation.

A summary of the sediment pond spillway soil testing results and ratings for four samples are: pH - samples rated good, with a range of 7.5 to 7.6; % Saturation - samples rates good (26 to 35.4); Electrical Conductivity - samples rated good (0.40 to 0.58 umhos/cm); Sodium Adsorption Ratio - samples rated good (0.53 to 1.05); Texture - samples rated good (sandy loam and sandy clay loam); Available Water Capacity - samples rated good; Boron - samples rated good (0.21 to 0.31 ppm); Selenium - samples rated good (less than 0.02 ppm) and Acid/Base Potential - All samples rated good (115 to 150 t/1000 tons).

223 Soil Characterization

Daniel M. Larsen, Professional Soil Scientist, performed the soil survey described in this chapter and included as Attachment 2-1, in accordance with the standards of the National Cooperative Soil Survey.

224 Substitute Topsoil

All soil resources to be removed from the refuse pile site qualify as growth media but not as topsoil. However, CFC may use selected overburden materials as a substitute or supplement to the salvaged soil.

If necessary for reclamation of the refuse pile, substitute topsoil/growth medium will be salvaged from a borrow area approximately 3/4 mile southeast of the refuse pile. The borrow area is located on lands owned by the permittee (Portions of the E1/2 NE1/4 SW1/4, W1/2 SE1/4, Section 17, T14S R12E). The borrow area has sufficient soil, in addition to the soils previously salvaged or available for salvage at the refuse site to cover the refuse pile with 4 feet of material. Refer to Section 233 and RA Attachment 2-3 for additional information.

Prior to salvaging soil to cover the waste at the refuse pile, 12- inches of soil will be salvaged from the borrow area to be used to reclaim the borrow area. This soil will be stockpiled in berms around the area to be salvaged. An additional 24 to 40 inches of soil will then be salvaged from the borrow area and transported to the refuse pile site to be used as cover over the waste in preparation for reclamation.

At the borrow site the southwestern quarter will be salvaged first, followed by the northwestern quarter (SB1 thru SB5, Figure 2, RA Attachment 2-3). Only the quantity of soil necessary for reclamation will be removed from the borrow area, thus if sufficient substitute soil is available from these areas, the area containing sites SB6 thru SB9 shown on Figure 2 will remain intact and undisturbed. The soil salvage will be between gullies, the boundary of the borrow area on the

southern, eastern and western edges are gullies as drawn on Figure 2, including a gully running through the middle of the borrow area site separating samples sites SB1 thru SB5 from sites SB6 thru SB9 (Figure 2, RA Attachment 2-3).

230 OPERATION PLAN

231 General Requirements

231.100 Removing and Storing Soil Methods

The refuse pile area has been the site of activities since the early 1900's. At the time of the initial disturbances, topsoil was apparently not salvaged; however during the excavation of gravel in 1998 - 1999 some soil was salvaged. These salvaged soils will be included in the soil stockpiles for the refuse pile (RA Plate 2-2). The methods described for soil salvage herein will be followed when removing and storing soil resources currently in-place.

Soil salvage will take place at the beginning of site use for all areas within the disturbed area boundary to be used immediately. There is no disturbance planned for the areas designated as H and J on RA Plate 2-1 except for the area to be disturbed for the construction of the sediment pond emergency spillway. Topsoil and subsoil will be salvaged and stockpiled from the area disturbed during the construction of the spillway. The removal of salvaged soils will include all horizons, except in soils salvage areas H and J (RA Plate 2-1), where no salvage of soils is currently planned except as state above. These materials will be stored in a graded stockpiles and seeded to promote surface stabilization. The seed mix to be used will be the interim seed mix described in Chapter 3, Section 341.200. At the time of the 1999 Soil and Geotechnical Surveys, the area designated a "L" in the soil survey was described as being a pile of gravel (on top of the soil), the gravel has since been removed from the site (2002). The soils available for salvage in area "L" are assumed to be similar to those in area "M". As recommended by the Division under R645-310-232.500 of the October 24, 2002 Technical Analysis two piles have been created, one stockpile for topsoil and the second for subsoils. Areas D, E, F plus areas K and G designated on RA Plate 2-1 will be salvaged

and placed in the topsoil pile. The majority of the salvaged topsoil come from the G and F soil units noted on the soils map. The remainder of the areas to be salvaged will be placed in the subsoil stockpile. Daniel M. Larsen, Professional Soil Scientist was on site during the salvage operations and determined in which pile the salvaged soils were placed.

The operator will endeavor to remove and store as much soil as possible in the designated stockpiles, thereby maximizing the protection of the soil resources of the site. The salvaged soil will be treated in compliance with R614-201-234.300.

231.200 Suitability of Topsoil Substitutes/Supplements

See Section 233.200.

231.300 Testing of Topsoil Handling and Reclamation Procedures Regarding Revegetation

See Sections 232 through 234 and Section 240.

231.400 Construction, Modification, Use, and Maintenance of Topsoil Storage Piles

See Section 234.

232 Topsoil and Subsoil Removal

232.100 Topsoil Removal and Segregation

Due to the disturbed nature of the site area, all available soil materials will be removed and stockpiled, since the soil resource is limited on the site (refer to Section 231.100). RA Plate 2-1 shows the areas of soils to be stripped and the approximate depth ranges for each soil. RA Table 2-2 presents an estimate of the soil materials that are available for salvage from each of the soil

units within the disturbed area. Supporting calculations are presented in Attachment 2-2. The estimate is based on an average of the recommendations of Mr. Larsen's soils report presented in Attachment 2-1. During the actual salvaging activities, efforts will be made to maximize the soil volume to be salvaged.

A professional soil scientist will be on-site during soil salvage operations to monitor and supervise salvage activities for the purpose of maximizing soil salvage volumes, quantities and to determine medium to be left in place (i.e. gravel, boulders). Should a professional soil scientist be unavailable, a professional with knowledge and experience in soil salvage (i.e. UDOGM Soil Reclamation Specialist) will be used. This commitment also applies to soil salvage from the borrow area.

232.200 Poor Topsoil

The soils on the site have been classified as fair to good for sustaining vegetation. Therefore, all available soil materials will be removed and stockpiled.

232.300 Thin Topsoil

Soil that is less than 6 inches thick will be removed with the immediately underlying unconsolidated materials and the mixture will be treated as salvageable soil.

232.400 Minor Disturbances Not Requiring Topsoil Removal

Small Structures. Soil will not be removed prior to construction that would result in only minor disturbances. Such construction activity includes work on small structures such as signs, fence lines, and etc.

Vegetation. The operator will not remove soil for minor disturbances where such activity will destroy vegetation or cause erosion.

232.500 Subsoil Segregation

The soil horizons will be removed and stockpiled together during the construction of the site, as described in Section 234.

232.600 Timing

Soil removal will take place after all vegetation that could interfere with soil salvage has been removed.

232.700 Topsoil and Subsoil Removal Under Adverse Conditions

Due to the disturbed nature of the site, soil horizons will be removed together, except where natural conditions render operations hazardous or detrimental to soils outside the disturbed area.

Conventional Machines. In localities where steep grades, adverse terrains, severe rockiness, limited depth of soils, or other adverse conditions exist that render soil removal activities using conventional machines hazardous, soils will not be salvaged and stockpiled.

Substitute Topsoil. Importing of substitute topsoil may be required depending upon the final height of the refuse pile, refer to Sections 224, 233 and 242.

233 Topsoil Substitutes and Supplements

233.100 Overburden Materials Supplementing and/or Replacing Topsoil

Selected overburden materials may be used below the salvaged soils during reclamation operations, if sufficient soil materials are not available for the proposed reclamation activities.

Where overburden materials are used, the operator commits to demonstrating to the Division prior to salvaged soil emplacement that the overburden materials are non-toxic, non-acid forming, and non-combustible. Refer to Section 536.200 discussion of waste sampling/testing.

The mixing of coal waste and subsoil is discussed in Section 242 and RA Attachment 2-2.

233.200 Suitability of Topsoil Substitutes and Supplements

The description of the substitute topsoil from the borrow area is based on the following information: taxonomic classification, horizon name and depth, color, texture (percent sand, silt, and clay), consistence, structure, percent rock fragments and organic matter, saturation, pH, EC, SAR, and solubility of calcium, magnesium, and sodium. This information in the soil test pit logs and the lab data sheets are included in RA Attachment 2-3 of this submittal.

The material from the borrow area will be available should there be a need for supplemental topsoil/growth medium to reclaim the refuse pile. The analysis of the soil test pit samples indicate that the physical and chemical properties are comparable to the soils salvaged at the refuse pile site. The substitute topsoil/growth medium will be left in place and be utilized only if need for reclamation of the refuse pile site.

The depth and number of samples taken from each backhoe pit location (Soil Pits SB1 through SB9) can be found in RA Attachment 2-3 on the laboratory soil analysis report. The soil pit locations are shown on Figure 2, RA Attachment 2-3. Photographs of the pits and borrow area are located in RA Attachment 2-3.

A summary of the borrow area soil testing results and ratings are provided below:

PH - Samples rated from mildly alkaline to moderately alkaline, with a range of 7.6 to 8.4.
% Saturation - 42 samples rated good (25 to 46.4) and 1 sample in SB8 rated fair (23.8).

Electrical Conductivity - 24 samples rates good (0.22 to 1.90 umhos/cm) and 14 samples rated fair (2.12 to 4.83 umhos/cm) and 5 samples rated poor (5.39 to 12.2 umhos/cm).

Texture - 41 samples rated good (loam, sand loam and sandy clay loam) and 2 samples rated fair (silt loam and silty clay loam)

Boron - 36 samples rated good (0.12 to 0.45 ppm), 7 samples rated fair (0.51 to 1.14 ppm)

Selenium - 34 samples rated good (0.02 ppm or less), 9 samples rated fair (0.04 to 0.28)

Acid/Base Potential - All samples rated good (124 to 197 T/1000 tons).

Borrow Area Soil Salvage Procedures - The soil borrow area will only be impacted during the short period during which the refuse pile is being reclaimed. The top 12-inches of soil from the borrow area will be removed/salvaged and placed as berms surrounding the salvage area. Once the salvage of soil to reclaim the waste rock site has been completed, the soil from the borrow area stored in the berms will be replaced, deep gouged, mulched and seeded. These activities should insure adequate revegetation potential at the borrow area.

Refer to Section 224 and RA Table 2-2 for addition information about the borrow area.

233.300 Physical and Chemical Analyses

Topsoil substitutes and supplements may be used for the refuse site area. The laboratory soil analysis report for the borrow area is included in RA Attachment 2-3.

The rate of sampling for the overburden beneath the soil will be sampled as discussed in Section 536.200.

Certification of Reclamation Topsoil Suitability. The borrow area substitute topsoil was certified by an approved laboratory in accordance with at least one of the following: Soil Conservation Service published data and technical guides, state agricultural agency, Tennessee

Valley Authority, BLM - USFS published data, physical and chemical analyses results, field-site trials, or greenhouse tests.

233.400 Testing of Substitute Topsoil

Only the substitute topsoil used in lieu of, or in conjunction with, on-site overburden and soil will be tested as described in Section 233.300.

234 Topsoil Storage

Soils salvaged from the site will be stockpiled on the site. Refer to Plates RA 5-1 and 7-1 for the stockpile location. The estimated volumes of soil to be stockpiled are presented in RA Table 2-2.

234.100 Topsoil Stockpiling

Soil removed will be stockpiled for later use in reclamation operations when it is impractical to promptly redistribute the materials on regraded areas. Refer to Plates RA 5-1 and 7-1 for the location of the soil storage area. Because the soil salvage quantities are estimated, the actual contours and corresponding cross-sections are approximate. The final soil stockpiles will be reflected in the as-built drawings for the site. RA Plate 2-2 will reflect as-built drawings of the stockpiles soils should they be moved to facilitate the expansion of the waste rock site. Once the expansion is completed the as-built drawings of the topsoil stockpiles will be submitted within six months.

It is anticipated that the piles will be constructed in horizontal lifts of 1.5 to 2.0 feet. Tracked equipment will be used to reduce compaction. The stockpiles will be graded to a maximum slope of 2:1 and seeded to promote surface stabilization. The interim reclamation seed mix described in Chapter 3, Section 341.200 will be used for this purpose.

The stockpiles will be kept isolated from the main area of the refuse site to protect the material from contaminants and unnecessary compaction that would interfere with vegetation. A sign will be installed on the stockpiles to identify one as a topsoil storage area and the second as the subsoil storage area. The stockpiles will be protected from wind and water erosion by being revegetated with a quick growing vegetative cover (interim seed mix) and by installing berms around the stockpiles to help trap sediment coming off the stockpiles. The stockpiled soils will be moved if necessary to facilitate the expansion of the waste rock site and for contemporaneous reclamation. Following the expansion, these stockpiled soils will not be moved or disturbed until required for redistribution during contemporaneous reclamation. The boulders designated in area "K" (RA Plate 2-1) will be stockpiled separately from the soils salvaged from the refuse site. The boulders will either be placed along the perimeter of the substitute topsoil pile, access road, on top of the subsoil pile or will be transported to the rock stockpile at the Dugout/Soldier Canyon Mine topsoil stockpile adjacent to the Soldier Canyon Road.

234.200 Stockpiled Topsoil

Stable Stockpile Site. Stockpiled materials will be placed on a stable site as described in Section 234.100.

Protection from Contaminants and Compaction. Stockpiled soil will be protected from contaminants and unnecessary compaction. To protect the soil from contaminants and unnecessary compaction that could interfere with vegetation, the stockpiles will be isolated from the main refuse pile area (Section 234.100). A sign designating "topsoil" will be installed on the stockpile.

The stockpile will be constructed in such a manner as to allow equipment access around the base of the stockpiles for repair of the surfaces and diversion structures as needed.

Furthermore, berms will be constructed around the stockpiles to further separate the soils from the materials stored on the site. The berm will be constructed as specified in Chapter 7.

Wind and Water Erosion Protection. The stockpiles will be protected from wind and water erosion by prompt establishment and maintenance of a vegetative cover. Berms will be constructed around the stockpiles to help trap sediment runoff from the stockpiles. Refer to Section 242 .100 for additional protection information.

Topsoil Redistribution. A limited quantity of stockpiled soil may be distributed on the refuse pile to determine the quantity of soil cover necessary to meet revegetation reclamation requirements. The remainder of the stockpiled soil will not be moved until redistributed during reclamation operations unless approved by the Division.

234.300 Topsoil Stockpile Relocation

Stockpiled soil in jeopardy of being detrimentally affected in terms of its quantity and quality by refuse pile operations may be temporarily redistributed upon approval by the Division and modification of this M&RP. The stockpiled soils will be moved to facilitate the expansion of the waste rock site. Following the expansion, these stockpiled soils will not be moved or disturbed until required for redistribution during contemporaneous and final reclamation.

Host Site. Soil relocation may occur provided that such action does not permanently adversely affect soil of the host site.

Topsoil Suitability. Stockpiled soil relocation may occur provided the material is retained in a condition more suitable for redistribution than if stockpiled.

240 RECLAMATION PLAN

241 General Requirements

Reclamation of the site (soil redistribution, amendments, and stabilization) is discussed in Sections 242, 243, and 244, respectively.

242 Soil Redistribution

242.100 Soil Redistribution Practices

The stored soil will be redistributed after recontouring of the site has occurred during reclamation activities. The refuse pile will be covered with 1 foot of equally blended coal waste and subsoil, approximately 2.6 feet of subsoil and approximately 0.4 feet of topsoil, to obtain a total depth of cover on the pile of 4 feet. The volume of material needed to cover the refuse pile is 82,976 CY.

There are currently topsoil and subsoil stockpiles located in the northwestern portion of the site. Olympus Aerial Surveys estimated the volume in each stockpile as well as the volume of soil in the containment berms as:

Topsoil Stockpile volume = 7,298 CY
Subsoil Stockpile volume = 6,508 CY
Berm volume = 2,686 CY

An additional 6,317 CY of subsoil has been stripped from the site since construction of the original stockpiles. Total cover material currently available in the stockpiles is estimated to be 22,809 CY

When the topsoil and subsoil stockpiles are moved to facilitate the expansion of the refuse pile additional subsoil may be excavated from the northwest portion of the site. The volume of material is estimated to be 5,400 CY.

During reclamation the berms and embankments that create the perimeter ditches and sediment pond will be pulled back to blend the undisturbed areas into the reclaimed refuse pile. This process will generate approximately 2,947 CY of additional cover material. The total available cover material at the refuse site is 31,156 CY

To reduce the volume of imported cover material the bottom foot of cover material will be a blend of coal waste and subsoil. Equal portions of coal waste and subsoil will be used to create this blended cover material. Thus, the volume of available cover material may be increased by 10,372 CY (560,088 ft2 x 0.5 ft / 27 ft3/CY) to a total of 41,528 CY.

Volume of cover material to be imported = 82,976 – 41,528 = 41,448 CY

Summary of Volumes

Volume of material needed to obtain 4 feet of cover = 82,976 CY
Total cover material available at the site = 31,156 CY
Vol. of coal waste blended with sub-soil to produce the first foot of cover = 10,372 CY
Vol. of subsoil blended with coal waste to produce the first foot of cover = 10,372 CY
Volume of subsoil and topsoil needed to cover the pile = 72,604 CY
Volume of cover material to be imported from borrow site = 41,448 CY

Soils will be handled when they are in a loose or friable condition. The moisture content will be visually monitored and water will be added as needed to enhance the soil's condition for handling.

Contemporaneous Reclamation: In the future, the applicant may decide to demonstrate that two feet of cover material over the refuse pile is sufficient to meet reclamation standards for bond release. Additional information and clarification of the project will be provided at that time. An area on the refuse pile will receive reclamation treatments contemporaneously to justify the decrease of required cover soils from four feet to two feet for final reclamation.

Soil Thickness: The topsoil will be distributed to the disturbed areas illustrated on Figure RA 5-1.

Currently, it is planned that the refuse pile portion of the site be covered with approximately 48 inches of soil. Based on the proposed pile configuration this will require about 82,976 CY of soil. The remainder of the site area, not used for refuse storage will be covered with approximately 6 inches of substitute topsoil. Calculations of the soil cover volumes are presented in Attachment 2-2. Soils in the area designated as H and J (approximately 11.2 acres) are not currently planned for salvage, except in the area of the pond spillway (RA Plate 2-1).

Compaction. To prevent compaction of topsoil, soil-moving equipment will refrain from unnecessary operation over spread soil. Front-end-loaders and other wheel-mounted equipment may be used to transport and dump soil. However, to minimize compaction, only track-mounted equipment (e.g. bulldozers, trackhoes) will be used to spread the soil. The soil will be loosened prior to seeding as described in Section 341.200.

Erosion. Care will be exercised to ensure the stability of soil on graded slopes to guard against erosion during and after soil application. Erosion control measures will include but not be limited to extreme surface roughening (also known as pocking and gouging).

242.200 Regrading

Since the site has been disturbed by previous activities and will be used to permanently store coal mine waste, the area will not be returned to the original geometric configuration. Prior to soil redistribution, the disturbed area will be graded to meet the proposed final reclamation topography (RA Plate 5-3).

The surface of the refuse pile will be left in a roughened state and in addition will be ripped prior to the application of soil. After the 1st lift of subsoil is placed, the surface of the refuse pile will be ripped again to a depth of approximately 12 inches in an effort to promote root penetration and to mix the

top layer of the refuse with the subsoil. Refer to Section 341.200 for further discussion of roughening methods.

The second type of surface consists of roads, perimeter ditches, etc. which may be compacted through their use. The surface will be ripped to a depth of approximately 1.5 to 2 feet with a ripper-equipped tractor or other appropriate equipment where possible to reduce surface compaction, to assure soil adherence, and promote root penetration. Following the ripping of the soils and the application of stockpiled soils, extreme roughening techniques will be applied. A backhoe or trackhoe will be used to create microbasins with a minimum depth of 18" and the width of the bucket. Soil removed to form the microbasins will be dropped approximately 2 to 3 feet above the microbasin onto the soil surface.

242.300 Topsoil Redistribution on Impoundments and Roads

The sedimentation pond and embankment will be breached and reclaimed with the other surface disturbed areas. Similarly, reclamation of abandoned roads will also follow the same technique as for other disturbed areas.

243 Soil Nutrients and Amendments

Soil nutrients and amendments may be applied to the redistributed soil as necessary, to establish the vegetative cover. The type and rate of application will be determined just prior to contemporaneous and final reclamation activities based on analyses of samples collected from the stockpiled soil materials. The soils will, at a minimum, be tested for pH, EC, total carbon, SAR, phosphorus, nitrate-nitrogen, and water holding capacity.

In the event that the topsoil/subsoil piles are moved adjacent to the Dugout Canyon Road in conjunction with the pile expansion, organic matter will be incorporated into topsoil/subsoil piles when the soils are relocated. The type and rate of application will be determined by the applicant and UDOGM reclamation specialists prior to moving the soils.

244 Soil Stabilization

244.100 Protection and Stabilization of Surface Areas

Reclaimed areas will be stabilized to control erosion by application of one or combinations of a mulch, extreme surface roughening, or other appropriate methods. Rills and gullies will be regraded (Refer to Section 244.300). Seeding will be accomplished using BTCA methods suitable for reclamation. These methods may include, but not necessarily limited to: application of seeds, and mulch with a long fiber tackifier. Refer to Section 341.200 for a discussion of the seeding and the incorporation of straw/hay into the soil. Additional and more detailed discussions regarding soil protection during and after final reclamation can be found in Chapter 5 of this submittal. Methods of revegetation to be employed at final reclamation at this site are discussed in more detail in Chapter 3.

244.200 Mulch Application

Mulch will be applied as discussed previously in this chapter and for a .further discussion of revegetation practices to be utilized, see Chapter 3 of the approved M&RP.

244.300 Rills and Gullies

Postmining Land Use and Revegetation. Rills and gullies that disrupt the postmining land use or reestablishment of vegetative cover will be regraded and seeded. CFC will fill, regrade, or otherwise stabilize any rills or gullies deeper than nine (9) inches that form in areas that have been regraded and soiled. The areas adjacent to any rills or gullies, which have been filled, regraded or otherwise stabilized, will be reseeded or stabilized accordingly.

Water Quality. Rills and gullies that contribute to the degradation of stream quality will be regraded and be seeded.

250 PERFORMANCE STANDARDS

251 Topsoil, Subsoil, and Topsoil Supplements Management

Topsoil, subsoil, and topsoil supplements shall be managed as outlined in Sections 230 and 240.

252 Stockpiled Topsoil and Subsoil

All stockpiled topsoil and subsoil will be managed according to plans outlined in Sections 230 and 240.

REFERENCES:

Jensen, E. H., and Borchert, J. W., 1988. Soil Survey of Carbon Area, Utah. Soil Conservation Service, United States Department of Agriculture, Washington D.C.

Leatherwood, J., and Duce, D., 1988. Guidelines for Management of Topsoil and Overburden for Underground and Surface Coal Mining. State of Utah Department of Natural Resources, Division of Oil, Gas and Mining.

RA TABLE 2-2

SOIL SALVAGE VOLUMES

AREA	VOLUME ANTICIPATED (CY)	VOLUME SALVAGED APPROXIMATE (CY)	
		Topsoil	Subsoil
A	4719		1787
B	14300		5323
C	5467		2778
D	2957	832	
E	4616	1313	1066
F	3393	2423	
G	2603	2595	
I	2356		
K	206		407
M	3700		3857
H & J (Spillway)		135	293
TOTAL	44317 CY	7298 CY	15511 CY

Soil Borrow Area (approximate available soil) 106,000 CY

RA TABLE 2-1

SOIL MAP UNIT FEATURES

Map Unit Symbol	Material	Depth to Shale	Texture	Rock Fragments (%)	Average pH
A	Shale	0 - 6"	Clay loam, silty clay loam	5 - 15	7.5
B	Gravelly Alluvium over Shale	20 - 40"	Loam, clay loam	20 - 60	7.3
C	Gravelly to Stony Alluvium	40 - 100"	Loam, clay loam, sandy clay loam	20 - 60	7.3
D	Non-gravelly Alluvium, some wind blown material	40 - 100"	Loam, clay loam, sandy clay loam	5 - 15	7.5
E	Gravelly Alluvium, small amount of refuse with coal on surface	40 - 100"	Clay loam, loam	15 - 45	7.5
F	Non-gravelly Alluvium (topsoil storage)	40 - 100"	Clay loam, sandy clay loam	5 - 15	7.0
G	Alluvium and woody materials	40 - 100"	Clay loam, sandy clay loam	15 - 30	7.3
H	Relatively Non-gravelly Alluvium (undisturbed)	60 - 100"	Loam, clay loam, sandy clay loam	5 - 25	7.4
I	Cobbly and Gravelly Alluvium	40 - 100"	Sandy clay loam, clay loam	25 - 65	7.5
J	Gravelly to Stony Alluvium over Shale	10 - 40"	Silty clay loam, clay loam, sandy clay loam	10 - 60	7.5
K	Boulders	-*	-	-	-
M	Shale with thin layer of Gravelly Alluvium	4 - 20"	Silty clay loam, sandy clay loam	5 - 40	7.5

* Refer to RA Plate 2-1 for description.

RA ATTACHMENT 2-2

SOIL VOLUME CALCULATIONS

RA ATTACHMENT 2-2

SOIL VOLUME CALCULATIONS

REGISTERED PROFESSIONAL ENGINEER
1-23-06
No. 189797
LAYNE D.
JENSEN
STATE OF UTAH

Reclamation Soil Thickness
Dugout Refuse Pile Site

The Refuse Pile is to be covered with 1 foot of equally blended coal waste and subsoil, approximately 2.6 feet of subsoil and approximately 0.4 feet of topsoil, to obtain a total depth of cover on the pile of 4 feet. The volumes of subsoil and topsoil needed to cover the pile are discussed below.

Area covered by the refuse pile = 516,552 ft^2

To obtain the surface area to be covered by soil the above area must be adjusted to account for the 2:1 slopes of the refuse pile. A 2:1 slope increases the surface area by 11.8%.

Slope area = 368,950 ft^2
Area of flatter space on top of the pile = 147,602 ft^2
Adjusted slope area = 1.118 x 368,950 ft^2 = 412,486 ft^2
Adjusted surface area of the pile to be covered = 560,088 ft^2

The refuse pile will be covered with 4 feet of cover material. The cover material will consist of topsoil, subsoil, and a blend of coal waste and subsoil.

The volume of material needed to cover the refuse pile = 82,976 CY

Available Cover Material

There are currently topsoil and subsoil stockpiles located in the northwestern portion of the site. These stockpiles have been surrounded by a full containment berm. Olympus Aerial Surveys estimated the volume in each stockpile as well as the volume of soil in the containment berms.

Topsoil Stockpile volume = 7,298 CY
Subsoil Stockpile volume = 6,508 CY
Berm volume = 2,686 CY

An additional 6,317 CY of subsoil has been stripped from the site since construction of the stockpiles.

Total cover material currently available to be placed in the new stockpiles = 22,809 CY

When the topsoil and subsoil stockpiles are moved to facilitate the expansion of the waste rock site additional subsoil may be excavated from the northwest portion of the site. The volume of material available to be stripped has been estimated to be 5,400 CY.

During reclamation the berms and embankments that create the perimeter ditches and sediment pond will be pulled back to blend the undisturbed areas into the reclaimed refuse pile. This process will generate approximately 2,947 CY of additional cover material.

Total available cover material = 31,156 CY

To reduce the volume of imported cover material the bottom foot of cover material will be a blend of coal waste and subsoil. Equal portions of coal waste and subsoil will be used to create this blended cover material. Thus, the volume of available cover material may be increased by 10,372 CY (560,088 ft^2 x 0.5 ft / 27 ft^3/CY) to a total of 41,528 CY.

The mixing of coal waste and subsoil, to produce the first foot of cover for the refuse pile, will occur only if the coal waste has been demonstrated through sampling and analysis to not be acid or toxic forming. Otherwise the entire 4 feet of cover material will be composed of subsoil and topsoil.

Volume of cover material needing to be imported = 82,976 – 41,528 = 41,448 CY

Summary of Volumes

Volume of material needed to obtain 4 feet of cover = 82,976 CY
Total cover material available at the site = 31,156 CY
Vol. of coal waste blended with sub-soil to produce the first foot of cover = 10,372 CY
Vol. of subsoil blended with coal waste to produce the first foot of cover = 10,372 CY
Volume of subsoil and topsoil needed to cover the pile = 72,604 CY
Volume of cover material to be imported from borrow site = 41,448 CY

Soil/Waste Rock Mixing Procedure

Depending on conditions there are many ways that the imported soil and coal waste can be effectively mixed. Examples of methods that may be used are:

1. Mixing with a tractor mounted tiller or similar equipment. On flatter areas of the pile a 6-inch layer of soil will be spread on the surface and then tilled with the coal waste to a depth of 12-inches. This tilled material may be left in place and the additional 3-feet of soil placed on top or the mixed material may be pushed onto the slopes as the initial 12'inches of soil cover;

2. Mixing with an excavator or front end loader. Equal amounts of soil and coal waste will be dumped on the surface of the pile and mixed together using an excavator or front end loader. A dozer will then push the mixture onto the surface of the pile in a 12-inch layer;

3. Loading equal amounts of coal waste and soil into a dump truck. Trucks hauling soil to the site can be loaded with an equal amount of coal waste. Mixing will occur as the material is being loaded as well as when the load is dumped. Additional mixing will occur when the mixture is pushed out over the pile by a dozer; and

4. Mixing with a dozer. A 6-inch layer of soil can be spread on the surface of the pile and then a dozer will push the soil and 6-inches of coal waste into a pile. The rolling action of the material in front of the dozer blade will mix the soil and coal waste. Additional mixing will occur as the material is pushed back out in a 12-inch layer.

RA ATTACHMENT 2-3

SOIL BORROW AREA

SOIL INVENTORY AND ASSESSMENT
SOIL BORROW AREA
DUGOUT CANYON MINE
CARBON COUNTY, UTAH

Prepared For:
CANYON FUEL COMPANY, LLC
PO BOX 1029
WELLINGTON, UTAH 84526

Prepared By:
Daniel M. Larsen
Professional Soil Scientist

TABLE OF CONTENTS

1. Introduction and Setting
2. Procedures
3. Soil Resources
    - Soil Inventory Results
    - Soil Testing Results
4. Soil Suitability Assessment

LIST OF APPENDICES

Appendix A Site Map and Soil Pit Locations
Appendix B Soil Analysis Report
Appendix C Soil Suitability Ratings
Appendix D Soil Profile Descriptions and Carbon Area Soil Survey Mapping Information
Appendix E Photographs of Site and Soil Profiles

1. Introduction and Setting

The soil inventory and assessment was conducted to evaluate a site proposed as a soil borrow area for the reclamation of Dugout Canyon Mine's refuse pile. The site is located in Section 17, Township 13 South, Range 12 East (Appendix A). The site is approximately 20 acres in size and photographs of the site have been included in Appendix E.

The site is in an alluvial fan valley fill position with relatively gentle slopes at an elevation of approximately 5800 feet. Slopes are 3 to 5 percent with a fairly smooth surface that has been dissected by gullies.

Typical vegetation includes Indian Rice Grass, Shadscale, Sagebrush and various other species. Annual precipitation is estimated at 8 inches and the average annual air temperature is 48 degrees Fahrenheit.

2. Procedures

Field work was conducted the first week of October, 2005. Spot checks were made by the use of a spade, hand soil auger, and observation of soils in erosional cuts such as gullies. Nine locations were selected for backhoe pits to obtain soil samples and allow soil descriptions. Each site was marked with a flagged stake and identified by SB-1 through SB-9. The soil pits were dug by Scamp Excavation on October 5, 2005. The pits were described and sampled by Dan Larsen, Soil Scientist on October 5th and 6th. Samples were submitted to Intermountain Laboratories, Inc., of Sheridan, Wyoming for testing of selected parameters required by the Utah Division of Oil, Gas and Mining (UDOGM). The soils were rated for suitability based on UDOGM Guidelines.

3. Soil Resources

The site has been mapped as "Ravola loam, 1 to 6 percent slopes, eroded" (Soil Map Unit 91) in the Soil Survey of the Carbon Area, Utah by the USDA, Soil Conservation Service, issued 1988. Ravola soils are very deep, well drained, and moderately permeable. They are classified as fine-silty, mixed, active, calcareous, mesic Typic Torrifluvents.

A copy of the order three level of mapping, a description of soil map Unit 91 and an official series description of the Ravola soil are included in Appendix D for reference. This soil map unit in not considered as prime farmland and the soils are listed as being fair for use as topsoil.

<u>Soil Inventory Results</u>

The soils on the site are fairly uniform in characteristics and would typically classify as the Ravola soil series. Of the nine soil profiles described there were only minor differences. The site is at the upper elevation limits of the Ravola series and there is a trend toward the Hernandez soil series which has a calcic horizon (more carbonates) and the particle size class is fine-loamy instead of fine silty.

For soil mapping purposes the site is basically one unit except for gullies which would reduce or eliminate the amount of soil available. The soils have formed in very deep (greater than 60 inches) alluvium derived from sandstone and shale. The most common texture is loam; however the amount of very fine sand dominates the total sand fraction and gives these soils characteristics similar to silt loam and yields a particle size class of fine-silty. A contrasting layer of soil about 4 to 8 inches, having more sand and fine gravel is present over much of the area at a depth of 38 to 45 inches.

The soils typically have brown to light grayish brown colors. The profiles show little change in color although the surface is slightly darker and the subsoils are lighter due to increases in carbonates and lower organic matter. They are generally low in soil organic matter and lack the dark colors typical of topsoil developed in moister environments.

Soil structure is typically fine granular and platy at the surface and becomes more blocky or massive with depth. The soils are moderately permeable and have a moderately high to high soil erodibility. The erosion hazard of the site is favored by the low degree of slope. Detailed soil descriptions are presented in Appendix D.

Soil Testing Results

The soil analytical results from Intermountain Laboratories are presented in Appendix B. A copy of the analytical results were used to record the suitability ratings for the soil samples. The suitability ratings are contained in Appendix C.

A summary of the analytical results is given below for suitability parameters.

PH - Ranged from 7.6 to 8.4, rated good to fair

Saturation % - Ranged from 23.8 to 46.4%, all rated good except for sample SB-8, 39 - 47" which rated poor due to a sandy layer

Electrical Conductivity - Ranged from 0.22 to 12.2 dS/m
Above 30 inches all samples were less than 4.0 dS/m
Nine subsoil samples were between 4.0 and 8.0 giving a rating of fair
Two samples had Electrical Conductivity greater than 8.0:
SB-6 - 48 - 68" = 8.38 dS/m
SB-9 - 36 - 72" = 12.3 dS/m

Sodium Adsorption Ratio (SAR) - Ranged from 0.18 to 11.9, the majority of the samples were below 4.0. Ten samples were rated fair with readings of between 4.0 and 10. Sample SB-9, 36-72" (11.9) had a poor rating

Texture - Laboratory analysis resulted in a particle size distribution yielding textures of loam and sandy loam except for one sample which barely fell into a silty clay loam class. Sandy loam

and loam rate as good for topsoil. The very fine sand is commonly 70 to 90 percent of the total sand content. Very fine sand plus silt is commonly about 65 to 75 percent of the overall soil matrix (mostly fine-silty). Clay content ranges from 12 to 28 percent. Rock fragments are generally less than 5 percent.

Available Water Capacity (AWC) - Ranged from 7.6 to 19.8 percent
Seven samples were between 7.6 and 10 percent with a fair rating
All other samples rated as good (>10%)

Acid/Base Potential - Ranged from 127 to 197 tons/1000 tons, all ratings are acceptable

Boron - Ranged from 0.12 to 1.14 ppm, all rated acceptable

Selenium - Ranged from less than 0.02 to 0.28 ppm
Samples SB-1, 54 to 78 inches and SB-5; 56 to 68 inches were rated unacceptable
Samples SB-1, 32 to 54 inches and SB-8, 47 to 72 inches were near unacceptable

Total Organic Carbon (TOC) - Ranged from less than 0.1 percent to 1.4 percent. All rated good at less then 10%, but show overall low organic matter content for topsoil

%$CaCO^3$ - Based on the acid base potential it is estimated that carbonates are about 10 to 20 percent, rating good to fair.

4. Soil Suitability Assessment

The area is fairly uniform for soil salvage, except where gullies are present. Rating the soils for suitability for use in reclamation was based on Table 4, "Soil and Spoil Suitability/Unsuitability Evaluation " in Guidelines for Management of Topsoil and Overburden, R645-301-200 Soils, State of Utah, Department of Natural Resources, Division of Oil, Gas and Mining, draft June 2003.

The most suitable soils are in the upper 18 to 36 inches of the borrow area soils although the overall rating would be fair to poor based on a moderately high to high soil erodability factor. Estimates give a K-factor (soil erodiblility) of about 0.37 to 0.43. A K-factor of 0.37 is considered "fair" and greater than 0.37 is considered "poor".

In the upper 36 inches of the samples, six of the soil profiles had pH ranging from 8.2 to 8.4 (fair rating). Several samples rated fair due to moderately high EC, SAR and carbonates and low available water capacity.

Below 36 inches some soil samples rated poor in factors including low saturated percentage, high EC and high SAR. Two samples (SB-1 and SB-5) had unacceptable levels of selenium below a depth of about 54 inches.

APPENDIX A

Site Map
Soil Pit Locations

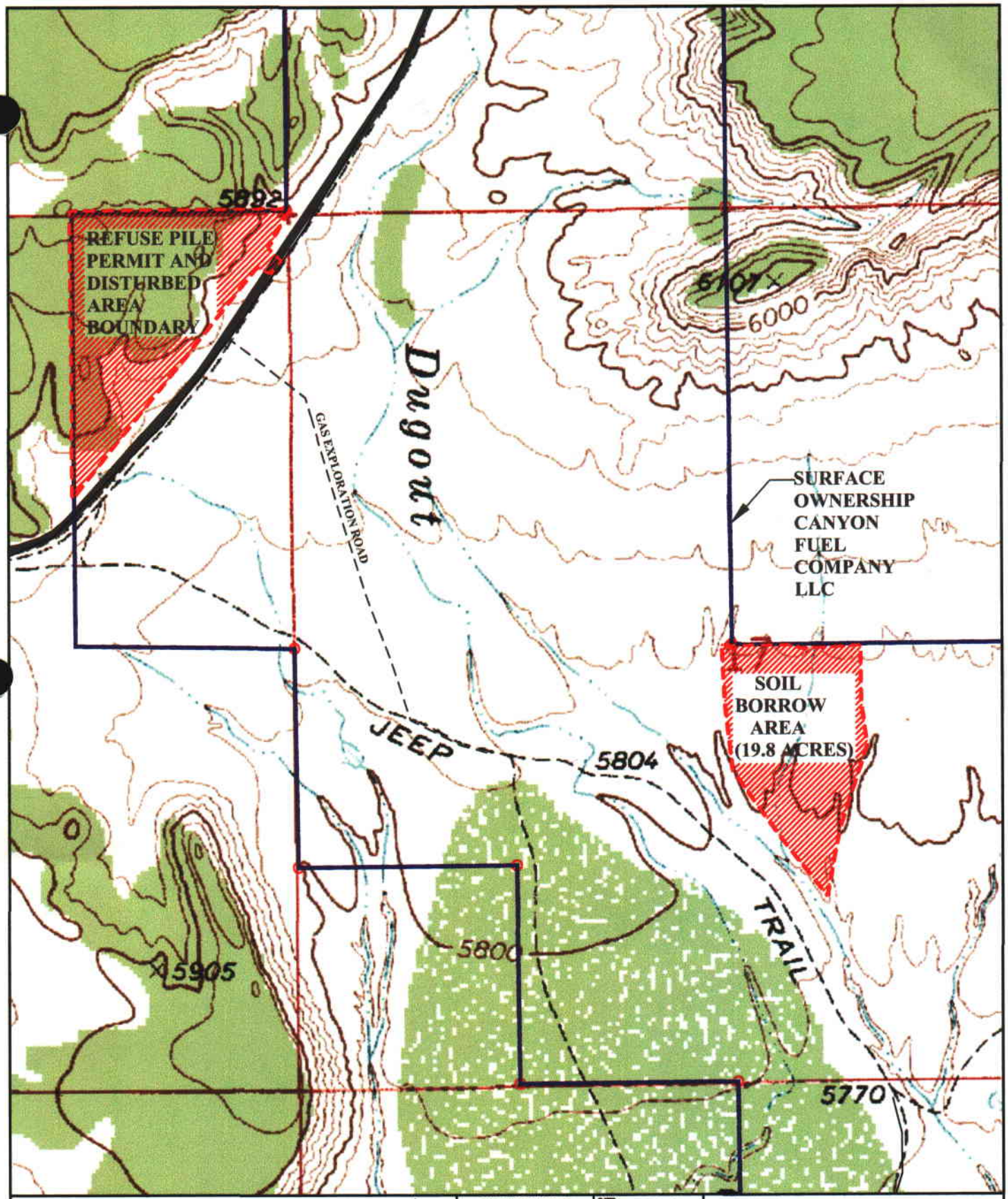

SOIL BORROW AREA IS LOCATED IN SECTION 17, T14S R12E

REVISIONS OR UP-DATES			DATE 1-19-06	
NO.	DATE	BY	DESIGNED BY	
			DRAWN BY	SC
			CHECKED BY	
			SCALE 1"=800'	

FILENAME Y:\BAK\CAD\SURFACE\SOIL BORROW AREA WASTEROCKAREA

Canyon Fuel Company, LLC
Dugout Canyon Mine

SOIL BORROW AREA
FIGURE 1
RA ATTACHMENT 2-3

P.O BOX 1029
WELLINGTON, UTAH 84542

DRAWING OR MAP NUMBER

SOIL BORROW AREA

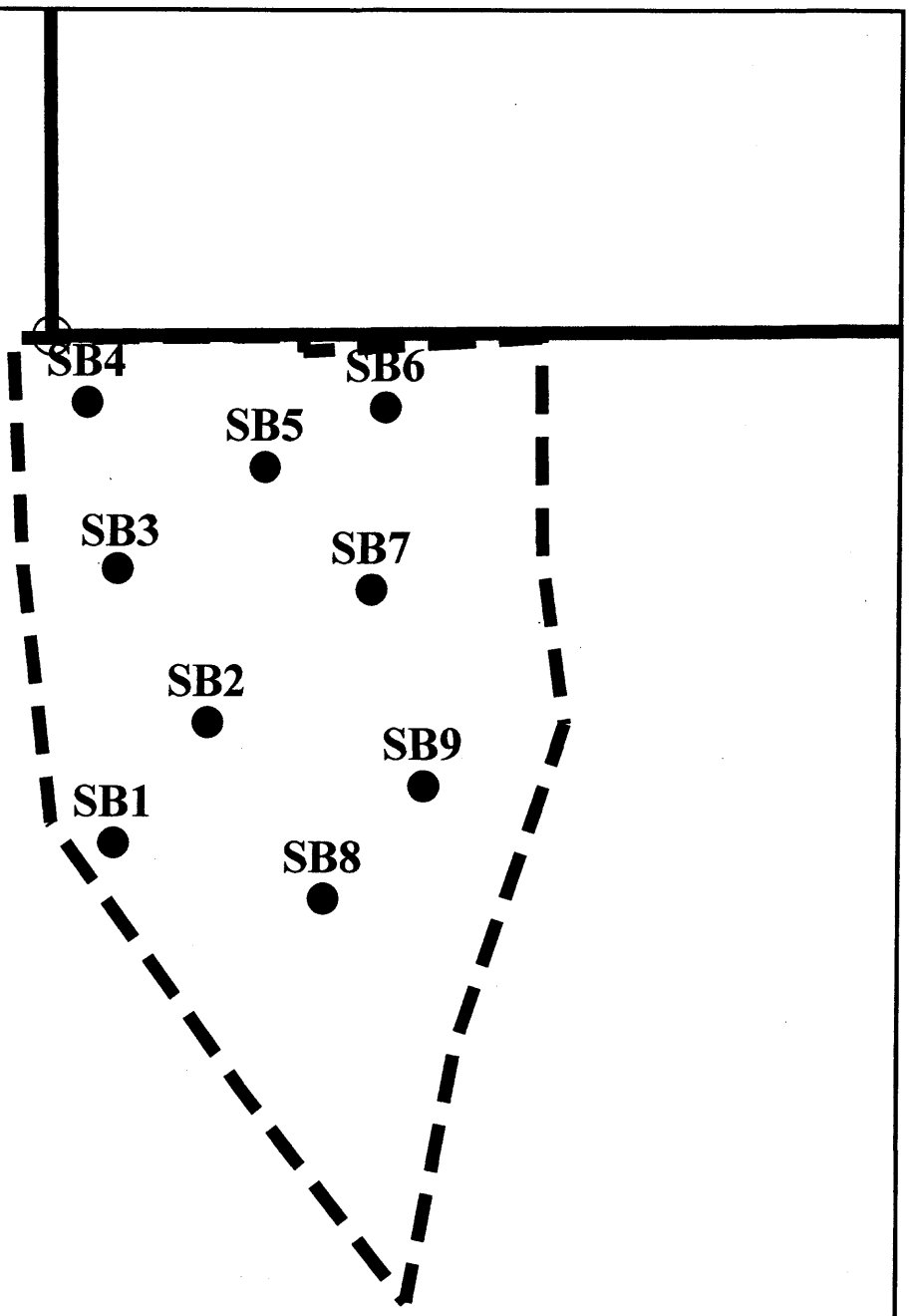

SOIL BORROW AREA IS LOCATED IN SECTION 17, T14S R12E

REVISIONS OR UP-DATES			DATE: 1-19-06	
NO.	DATE	BY	DESIGNED BY:	
			DRAWN BY:	SC
			CHECKED BY:	
			SCALE: 1"=300'	

FILENAME: Y:\SHA\CAD\SURFACE\SOIL BORROW AREA WASTEROCKAREA FIG2

Canyon Fuel Company, LLC
Dugout Canyon Mine

BORROW AREA, SOIL PIT LOCATIONS

P.O BOX 1029
WELLINGTON, UTAH 84542

DRAWING OR MAP NUMBER

APPENDIX B

Soil Analysis Report

Inter-Mountain Laboratories, Inc.

Report ID: 010509502

1633 Terra Avenue
Sheridan, WY 82801

REC'D DEC - 5 2005

Soil Analysis Report
Canyon Fuel Co
Dugout Mine -Canyon Fuel
P.O. Box 1029
Wellington, UT 84542

Client Project ID: Dugout Canyon
Date Received: 10/12/05

Set #0105S09502
Report Date: 11/28/05

Lab Id	Sample Id	Depths (Inches)	pH s.u.	Saturation %	EC @ 25°C dS/m	Calcium meq/L	Magnesium meq/L	Sodium meq/L	SAR	Sand %	Silt %	Clay %	Texture
0105S09502	SB-1	0 - 5	7.6	33.1	0.38	2.64	0.93	0.24	0.18	33.0	45.0	22.0	LOAM
0105S09503	SB-1	5 - 13	7.8	37.3	0.33	1.34	0.71	1.19	1.17	26.0	48.0	26.0	LOAM
0105S09504	SB-1	13 - 32	7.9	40.4	2.12	7.85	5.07	10.7	4.20	37.0	41.0	22.0	LOAM
0105S09505	SB-1	32 - 54	7.6	37.9	4.83	25.8	16.9	17.5	3.78	36.0	38.0	26.0	LOAM
0105S09506	SB-1	54 - 78	7.7	35.5	4.00	20.6	24.0	9.25	1.96	42.0	42.0	16.0	LOAM
0105S09507	SB-2	0 - 8	7.7	31.4	0.39	3.15	0.67	0.33	0.24	47.0	37.0	16.0	LOAM
0105S09508	SB-2	8 - 15	7.7	29.7	0.30	2.89	0.73	0.26	0.20	50.0	30.0	20.0	LOAM
0105S09509	SB-2	15 - 26	7.8	30.2	0.22	1.57	0.42	0.46	0.46	43.0	37.0	20.0	LOAM
0105S09510	SB-2	26 - 48	7.7	46.4	0.83	6.30	1.51	1.01	0.51	14.0	58.0	28.0	SILTY CLAY LOA
0105S09511	SB-2	48 - 70	7.7	43.6	3.43	21.5	21.3	5.68	1.23	19.0	55.0	26.0	SILT LOAM
0105S09512	SB-3	0 - 6	7.8	30.6	0.46	3.03	1.20	0.27	0.19	40.0	42.0	18.0	LOAM
0105S09513	SB-3	6 - 18	7.9	35.9	0.33	1.54	0.91	1.00	0.91	35.0	39.0	26.0	LOAM
0105S09514	SB-3	18 - 38	8.2	38.0	1.05	1.81	0.92	7.50	6.42	36.0	42.0	22.0	LOAM
0105S09515	SB-3	38 - 45	7.8	25.0	4.19	19.5	10.7	24.7	6.36	72.0	15.0	13.0	SANDY LOAM
0105S09516	SB-3	45 - 72	7.6	33.4	2.46	12.5	7.17	5.25	1.67	40.0	41.0	19.0	LOAM
0105S09517	SB-4	0 - 5	7.8	36.6	0.42	2.14	0.82	0.71	0.58	30.0	44.0	26.0	LOAM
0105S09518	SB-4	5 - 18	8.2	32.5	0.35	1.00	0.47	1.87	2.18	43.0	37.0	20.0	LOAM
0105S09519	SB-4	18 - 31	8.4	36.0	0.63	0.96	0.54	4.36	5.04	38.0	41.0	21.0	LOAM
0105S09520	SB-4	31 - 44	7.9	26.3	4.52	19.1	22.5	17.0	3.72	70.0	14.0	16.0	SANDY LOAM
0105S09521	SB-4	44 - 64	7.7	33.4	4.57	21.7	18.3	16.1	3.59	42.0	38.0	20.0	LOAM
0105S09522	SB-5	0 - 12	7.9	28.0	0.30	1.98	0.68	0.47	0.41	50.0	32.0	18.0	LOAM
0105S09523	SB-5	12 - 30	8.3	35.3	0.59	1.04	0.65	4.06	4.42	31.0	47.0	22.0	LOAM
0105S09524	SB-5	30 - 56	7.8	36.2	5.65	21.9	19.3	24.3	5.35	39.0	37.0	24.0	LOAM
0105S09525	SB-5	56 - 68	7.9	32.8	5.39	21.4	29.3	18.9	3.75	44.0	38.0	18.0	LOAM
0105S09526	SB-6	0 - 8	8.0	32.0	0.67	2.12	1.03	2.51	2.00	48.0	36.0	16.0	LOAM
0105S09527	SB-6	8 - 17	8.3	31.5	0.53	1.23	0.50	3.74	4.02	52.0	30.0	18.0	SANDY LOAM
0105S09528	SB-6	17 - 29	8.2	31.3	0.42	0.96	0.37	2.96	3.63	38.0	38.0	24.0	LOAM

These results only apply to the samples tested.

Abbreviations for extractants: PE= Saturated Paste Extract, H20Sol= water soluble,AB-DTPA= Ammonium Bicarbonate-DTPA, AAO= Acid Ammonium Oxalate
Abbreviations used in acid base accounting: T.S.= Total Sulfur, AB= Acid Base, ABP= Acid Base Potential, PyrS= Pyritic Sulfur, Pyr+Org= Pyritic Sulfur + Organic Sulfur, Neut. Pot.= Neutralization Potential
Miscellaneous Abbreviations: SAR= Sodium Adsorption Ratio, CEC= Cation Exchange Capacity, ESP= Exchangeable Sodium Percentage

Review: Joey Shepley
Joey Shepley, Soils Lab Supervisor

Inter-Mountain Laboratories, Inc.

Report ID: 010509502

1633 Terra Avenue
Sheridan, WY 82801

Soil Analysis Report

Canyon Fuel Co

Dugout Mine -Canyon Fuel
P.O. Box 1029
Wellington, UT 84542

Client Project ID: Dugout Canyon
Date Received: 10/12/05

Set #0105S09502
Report Date: 11/28/05

Lab Id	Sample Id	Depths (Inches)	Very Fine Sand %	Field Capacity %	Wilt Point %	TOC %	Total Sulfur %	T.S. AB t/1000t	Neutral. Pot. t/1000t	T.S. ABP t/1000t
0105S09502	SB-1	0 - 5	20.9	23.1	9.5	0.3	<0.01	0.00	157	157
0105S09503	SB-1	5 - 13	23.2	25.4	12.8	0.3	0.01	0.31	167	166
0105S09504	SB-1	13 - 32	28.6	23.9	12.7	<0.1	<0.01	0.00	148	148
0105S09505	SB-1	32 - 54	27.6	24.8	12.4	0.2	0.44	13.7	141	127
0105S09506	SB-1	54 - 78	33.2	26.1	6.3	<0.1	0.01	0.31	154	153
0105S09507	SB-2	0 - 8	28.2	21.6	6.5	0.3	<0.01	0.00	136	136
0105S09508	SB-2	8 - 15	23.6	17.2	7.6	<0.1	0.01	0.31	146	145
0105S09509	SB-2	15 - 26	29.4	21.8	7.5	0.6	0.01	0.31	146	145
0105S09510	SB-2	26 - 48	13.4	29.4	16.1	0.9	0.01	0.31	180	180
0105S09511	SB-2	48 - 70	15.6	26.9	13.4	<0.1	0.30	9.37	163	154
0105S09512	SB-3	0 - 6	23.0	23.2	8.7	1.4	0.01	0.31	148	148
0105S09513	SB-3	6 - 18	24.3	22.8	10.6	0.2	<0.01	0.00	164	164
0105S09514	SB-3	18 - 38	24.8	21.0	11.3	0.3	0.01	0.31	146	146
0105S09515	SB-3	38 - 45	15.5	13.1	5.2	<0.1	<0.01	0.00	181	181
0105S09516	SB-3	45 - 72	24.5	24.5	7.5	0.2	0.01	0.31	159	158
0105S09517	SB-4	0 - 5	21.9	24.8	11.4	0.3	0.01	0.31	164	164
0105S09518	SB-4	5 - 18	22.7	23.0	9.4	0.3	<0.01	0.00	165	165
0105S09519	SB-4	18 - 31	26.7	22.2	11.5	0.2	<0.01	0.00	155	155
0105S09520	SB-4	31 - 44	13.5	17.3	5.9	<0.1	<0.01	0.00	184	184
0105S09521	SB-4	44 - 64	28.2	25.0	8.6	0.2	<0.01	0.00	154	154
0105S09522	SB-5	0 - 12	24.1	19.0	7.3	0.3	0.01	0.31	165	165
0105S09523	SB-5	12 - 30	21.5	22.9	10.0	0.3	0.01	0.31	144	144
0105S09524	SB-5	30 - 56	25.4	24.3	11.0	0.2	0.36	11.2	155	144
0105S09525	SB-5	56 - 68	28.8	23.3	8.7	0.1	0.32	10.0	139	129
0105S09526	SB-6	0 - 8	31.3	20.0	8.8	0.4	0.01	0.31	166	165
0105S09527	SB-6	8 - 17	28.7	17.4	9.0	0.4	<0.01	0.00	158	158
0105S09528	SB-6	17 - 29	21.1	19.1	11.3	0.2	0.02	0.62	155	154

These results only apply to the samples tested.

Abbreviations for extractants: PE= Saturated Paste Extract, H20Sol= water soluble,AB-DTPA= Ammonium Bicarbonate-DTPA, AAO= Acid Ammonium Oxalate
Abbreviations used in acid base accounting: T.S.= Total Sulfur, AB= Acid Base, ABP= Acid Base Potential, PyrS= Pyritic Sulfur, Pyr+Org= Pyritic Sulfur + Organic Sulfur, Neut. Pot.= Neutralization Potential
Miscellaneous Abbreviations: SAR= Sodium Adsorption Ratio, CEC= Cation Exchange Capacity, ESP= Exchangeable Sodium Percentage

Review[illegible]y: Joey Shewley
Joey Shewley, Soils Lab Supervisor

Inter-Mountain Laboratories, Inc.

Report ID: 010509502

1633 Terra Avenue
Sheridan, WY 82801

Soil Analysis Report

Canyon Fuel Co

Dugout Mine -Canyon Fuel

P.O. Box 1029

Wellington, UT 84542

Client Project ID: Dugout Canyon

Date Received: 10/12/05

Set #0105S09502

Report Date: 11/28/05

Lab Id	Sample Id	Depths (Inches)	Boron ppm	Nitrogen Nitrate ppm	TKN %	Selenium ppm	Available Sodium meq/100g	Exchangeable Sodium meq/100g
0105S09502	SB-1	0 - 5	0.24	1.22	0.09	<0.02	0.10	0.09
0105S09503	SB-1	5 - 13	0.45	0.26	0.13	<0.02	0.26	0.22
0105S09504	SB-1	13 - 32	0.67	0.02	0.08	<0.02	1.24	0.81
0105S09505	SB-1	32 - 54	0.55	0.36	0.09	0.14	1.51	0.85
0105S09506	SB-1	54 - 78	0.41	1.70	0.06	0.16	0.73	0.40
0105S09507	SB-2	0 - 8	0.12	0.90	0.08	<0.02	0.09	0.08
0105S09508	SB-2	8 - 15	0.17	0.40	0.09	<0.02	0.08	0.07
0105S09509	SB-2	15 - 26	0.12	0.24	0.06	<0.02	0.13	0.12
0105S09510	SB-2	26 - 48	0.26	0.16	0.09	<0.02	0.22	0.17
0105S09511	SB-2	48 - 70	1.14	0.26	0.05	0.10	0.60	0.35
0105S09512	SB-3	0 - 6	0.19	3.34	0.06	<0.02	0.08	0.07
0105S09513	SB-3	6 - 18	0.29	0.18	0.08	<0.02	0.39	0.35
0105S09514	SB-3	18 - 38	0.31	0.78	0.08	<0.02	1.61	1.33
0105S09515	SB-3	38 - 45	0.22	3.02	0.07	0.02	1.34	0.72
0105S09516	SB-3	45 - 72	0.23	0.94	0.04	0.02	0.50	0.32
0105S09517	SB-4	0 - 5	0.18	2.46	0.09	<0.02	0.16	0.13
0105S09518	SB-4	5 - 18	0.32	0.32	0.07	<0.02	0.52	0.46
0105S09519	SB-4	18 - 31	0.33	0.18	0.10	<0.02	1.27	1.11
0105S09520	SB-4	31 - 44	0.43	0.40	0.06	0.04	1.05	0.60
0105S09521	SB-4	44 - 64	0.25	0.32	0.06	0.02	1.26	0.72
0105S09522	SB-5	0 - 12	0.24	0.42	0.04	<0.02	0.10	0.09
0105S09523	SB-5	12 - 30	0.32	<0.02	0.08	<0.02	1.10	0.96
0105S09524	SB-5	30 - 56	0.60	0.18	0.05	0.04	2.02	1.14
0105S09525	SB-5	56 - 68	0.51	0.24	0.04	0.28	1.34	0.72
0105S09526	SB-6	0 - 8	0.25	0.76	0.06	<0.02	0.38	0.30
0105S09527	SB-6	8 - 17	0.31	0.28	0.06	<0.02	0.80	0.68
0105S09528	SB-6	17 - 29	0.25	0.10	0.05	<0.02	0.95	0.86

These results only apply to the samples tested.

Abbreviations for extractants: PE= Saturated Paste Extract, H20Sol= water soluble,AB-DTPA= Ammonium Bicarbonate-DTPA, AAO= Acid Ammonium Oxalate
Abbreviations used in acid base accounting: T.S.= Total Sulfur, AB= Acid Base, ABP= Acid Base Potential, PyrS= Pyritic Sulfur, Pyr+Org= Pyritic Sulfur + Organic Sulfur, Neut. Pot.= Neutralization Potential
Miscellaneous Abbreviations: SAR= Sodium Adsorption Ratio, CEC= Cation Exchange Capacity, ESP= Exchangeable Sodium Percentage

Review: Joey Sheeley

Joey Sheeley, Soils Lab Supervisor

Inter-Mountain Laboratories, Inc.

Report ID: 010509502

1633 Terra Avenue
Sheridan, WY 82801

Soil Analysis Report

Canyon Fuel Co

Dugout Mine -Canyon Fuel
P.O. Box 1029
Wellington, UT 84542

Client Project ID: Dugout Canyon

Date Received: 10/12/05

Set #0105S09502

Report Date: 11/28/05

Lab Id	Sample Id	Depths (Inches)	pH s.u.	Saturation %	EC @ 25°C dS/m	Calcium meq/L	Magnesium meq/L	Sodium meq/L	SAR	Sand %	Silt %	Clay %	Texture
0105S09529	SB-6	29 - 48	7.9	36.8	4.51	19.6	13.3	23.7	5.86	39.0	39.0	22.0	LOAM
0105S09530	SB-6	48 - 68	7.9	33.9	8.38	20.9	48.8	42.4	7.19	39.0	37.0	24.0	LOAM
0105S09531	SB-7	0 - 3	7.9	29.6	0.80	4.46	1.41	1.44	0.84	49.0	38.0	13.0	LOAM
0105S09532	SB-7	3 - 8	8.0	31.1	0.30	1.56	0.64	0.54	0.52	40.0	40.0	20.0	LOAM
0105S09533	SB-7	8 - 23	8.2	29.7	0.41	1.15	0.59	2.13	2.28	39.0	43.0	18.0	LOAM
0105S09534	SB-7	23 - 50	8.0	25.6	4.76	15.8	12.1	29.6	7.93	63.0	19.0	18.0	SANDY LOAM
0105S09535	SB-7	50 - 72	7.8	33.5	5.85	18.8	24.0	30.7	6.64	40.0	36.0	24.0	LOAM
0105S09536	SB-8	0 - 8	7.8	29.0	0.36	2.49	1.01	0.54	0.41	48.0	32.0	20.0	LOAM
0105S09537	SB-8	8 - 16	8.0	31.3	0.28	1.73	0.76	0.44	0.39	43.0	38.0	19.0	LOAM
0105S09538	SB-8	16 - 39	7.8	37.5	2.24	18.9	9.22	3.04	0.81	35.0	41.0	24.0	LOAM
0105S09539	SB-8	39 - 47	7.7	23.8	2.75	21.0	10.7	5.66	1.42	69.0	19.0	12.0	SANDY LOAM
0105S09540	SB-8	47 - 72	7.6	36.9	3.06	22.4	10.9	6.64	1.63	34.0	40.0	26.0	LOAM
0105S09541	SB-9	0 - 7	7.9	38.5	0.37	2.37	0.91	0.43	0.34	30.0	44.0	26.0	LOAM
0105S09542	SB-9	7 - 20	8.3	39.0	0.33	0.90	0.49	2.05	2.46	31.0	47.0	22.0	LOAM
0105S09543	SB-9	20 - 36	8.3	36.3	1.90	2.12	2.91	11.3	7.12	32.0	48.0	20.0	LOAM
0105S09544	SB-9	36 - 72	8.3	34.0	12.2	16.9	63.2	75.5	11.9	42.0	37.0	21.0	LOAM

These results only apply to the samples tested.

Abbreviations for extractants: PE= Saturated Paste Extract, H20Sol= water soluble,AB-DTPA= Ammonium Bicarbonate-DTPA, AAO= Acid Ammonium Oxalate
Abbreviations used in acid base accounting: T.S.= Total Sulfur, AB= Acid Base, ABP= Acid Base Potential, PyrS= Pyritic Sulfur, Pyr+Org= Pyritic Sulfur + Organic Sulfur, Neut. Pot.= Neutralization Potential
Miscellaneous Abbreviations: SAR= Sodium Adsorption Ratio, CEC= Cation Exchange Capacity, ESP= Exchangeable Sodium Percentage

Review: Joey Shelley

Joey Shelley, Soils Lab Supervisor

Inter-Mountain Laboratories, Inc.

Report ID: 010509502

1633 Terra Avenue
Sheridan, WY 82801

Soil Analysis Report
Canyon Fuel Co
Dugout Mine -Canyon Fuel
P.O. Box 1029
Wellington, UT 84542

Client Project ID: Dugout Canyon
Date Received: 10/12/05

Set #0105S09502
Report Date: 11/28/05

Lab Id	Sample Id	Depths (Inches)	Very Fine Sand %	Field Capacity %	Wilt Point %	TOC %	Total Sulfur %	T.S. AB t/1000t	Neutral. Pot. t/1000t	T.S. ABP t/1000t
0105S09529	SB-6	29 - 48	24.9	23.6	12.6	0.2	0.12	3.75	127	124
0105S09530	SB-6	48 - 68	23.9	24.2	11.1	0.2	0.28	8.75	143	134
0105S09531	SB-7	0 - 3	30.8	20.8	6.9	0.5	0.01	0.31	153	153
0105S09532	SB-7	3 - 8	26.2	21.9	10.3	0.3	0.01	0.31	163	162
0105S09533	SB-7	8 - 23	24.6	21.2	9.4	0.3	0.01	0.31	168	168
0105S09534	SB-7	23 - 50	12.4	15.1	7.5	<0.1	<0.01	0.00	197	197
0105S09535	SB-7	50 - 72	21.0	21.6	11.1	0.2	0.02	0.62	141	140
0105S09536	SB-8	0 - 8	27.8	21.1	8.9	1.2	<0.01	0.00	168	168
0105S09537	SB-8	8 - 16	28.1	23.2	9.9	0.3	0.01	0.31	155	155
0105S09538	SB-8	16 - 39	26.9	25.3	12.3	0.3	0.01	0.31	139	139
0105S09539	SB-8	39 - 47	16.1	14.5	5.8	<0.1	0.03	0.94	195	194
0105S09540	SB-8	47 - 72	24.3	26.3	11.8	0.3	0.02	0.62	146	145
0105S09541	SB-9	0 - 7	21.0	24.3	12.2	0.4	<0.01	0.00	153	153
0105S09542	SB-9	7 - 20	21.4	23.4	13.1	0.3	0.01	0.31	163	162
0105S09543	SB-9	20 - 36	21.3	22.9	12.1	<0.1	<0.01	0.00	162	162
0105S09544	SB-9	36 - 72	23.1	22.5	11.2	0.1	0.33	10.3	150	139

These results only apply to the samples tested.

Abbreviations for extractants: PE= Saturated Paste Extract, H20Sol= water soluble,AB-DTPA= Ammonium Bicarbonate-DTPA, AAO= Acid Ammonium Oxalate
Abbreviations used in acid base accounting: T.S.= Total Sulfur, AB= Acid Base, ABP= Acid Base Potential, PyrS= Pyritic Sulfur, Pyr+Org= Pyritic Sulfur + Organic Sulfur, Neut. Pot.= Neutralization Potential
Miscellaneous Abbreviations: SAR= Sodium Adsorption Ratio, CEC= Cation Exchange Capacity, ESP= Exchangeable Sodium Percentage

Review[redacted]: Joey Shepley
Joey Shepley, Soils Lab Supervisor

Inter-Mountain Laboratories, Inc.

Report ID: 010509502

1633 Terra Avenue
Sheridan, WY 82801

Soil Analysis Report
Canyon Fuel Co
Dugout Mine -Canyon Fuel
P.O. Box 1029
Wellington, UT 84542

Client Project ID: Dugout Canyon
Date Received: 10/12/05

Set #0105S09502
Report Date: 11/28/05

Lab Id	Sample Id	Depths (Inches)	Boron ppm	Nitrogen Nitrate ppm	TKN %	Selenium ppm	Available Sodium meq/100g	Exchangeable Sodium meq/100g
0105S09529	SB-6	29 - 48	0.65	0.18	0.07	<0.02	2.08	1.21
0105S09530	SB-6	48 - 68	0.59	0.48	0.05	0.04	2.86	1.42
0105S09531	SB-7	0 - 3	0.24	8.10	0.08	<0.02	0.15	0.11
0105S09532	SB-7	3 - 8	0.23	2.04	0.06	<0.02	0.12	0.10
0105S09533	SB-7	8 - 23	0.30	0.40	0.08	<0.02	0.40	0.34
0105S09534	SB-7	23 - 50	0.30	1.12	0.04	0.02	1.71	0.95
0105S09535	SB-7	50 - 72	0.16	2.24	0.01	<0.02	2.45	1.42
0105S09536	SB-8	0 - 8	0.13	0.74	0.05	<0.02	0.07	0.05
0105S09537	SB-8	8 - 16	0.23	0.22	0.06	<0.02	0.12	0.11
0105S09538	SB-8	16 - 39	0.38	<0.02	0.06	<0.02	0.35	0.24
0105S09539	SB-8	39 - 47	0.13	1.04	0.06	0.02	0.36	0.23
0105S09540	SB-8	47 - 72	0.27	0.50	0.04	0.14	0.64	0.39
0105S09541	SB-9	0 - 7	0.29	1.32	0.09	<0.02	0.11	0.09
0105S09542	SB-9	7 - 20	0.35	<0.02	0.07	<0.02	0.54	0.46
0105S09543	SB-9	20 - 36	0.24	0.08	0.10	0.02	1.79	1.38
0105S09544	SB-9	36 - 72	0.31	0.34	0.05	0.10	5.61	3.04

These results only apply to the samples tested.

Abbreviations for extractants: PE= Saturated Paste Extract, H20Sol= water soluble,AB-DTPA= Ammonium Bicarbonate-DTPA, AAO= Acid Ammonium Oxalate
Abbreviations used in acid base accounting: T.S.= Total Sulfur, AB= Acid Base, ABP= Acid Base Potential, PyrS= Pyritic Sulfur, Pyr+Org= Pyritic Sulfur + Organic Sulfur, Neut. Pot.= Neutralization Potential
Miscellaneous Abbreviations: SAR= Sodium Adsorption Ratio, CEC= Cation Exchange Capacity, ESP= Exchangeable Sodium Percentage

Review[illegible]r: Joey Shewley
Joey Shewley, Soils Lab Supervisor

Inter-Mountain Laboratories, Inc.

Report ID: 010509502

1633 Terra Avenue
Sheridan, WY 82801

Soil Analysis Report

Canyon Fuel Co
Dugout Mine -Canyon Fuel
P.O. Box 1029
Wellington, UT 84542

Client Project ID: Dugout Canyon
Date Received: 10/12/05

Set #0105S09502
Report Date: 11/28/05

Lab Id	Sample Id	Depths (Inches)	pH s.u.	Saturation %	EC @ 25°C dS/m	Calcium meq/L	Magnesium meq/L	Sodium meq/L	SAR	Sand %	Silt %	Clay %	Texture
0105S09524	SB-5	30 - 56	7.8	36.2	5.65	21.9	19.3	24.3	5.35	39.0	37.0	24.0	LOAM
0105S09524D	SB-5	30 - 56	7.8	37.0	5.75	22.6	19.8	24.8	5.37	38.0	38.0	24.0	LOAM
0105S09536	SB-8	0 - 8	7.8	29.0	0.36	2.49	1.01	0.54	0.41	48.0	32.0	20.0	LOAM
0105S09536D	SB-8	0 - 8	7.8	30.1	0.35	2.73	0.69	0.22	0.17	47.0	33.0	20.0	LOAM
0105S09538	SB-8	16 - 39	7.8	37.5	2.24	18.9	9.22	3.04	0.81	35.0	41.0	24.0	LOAM
0105S09538D	SB-8	16 - 39	7.7	42.0	2.22	17.0	8.51	3.01	0.84	34.0	42.0	24.0	LOAM
0105S09541	SB-9	0 - 7	7.9	38.5	0.37	2.37	0.91	0.43	0.34	30.0	44.0	26.0	LOAM
0105S09541D	SB-9	0 - 7	7.9	36.4	0.35	2.12	0.81	0.39	0.32	31.0	47.0	22.0	LOAM

These results only apply to the samples tested.

Abbreviations for extractants: PE= Saturated Paste Extract, H20Sol= water soluble,AB-DTPA= Ammonium Bicarbonate-DTPA, AAO= Acid Ammonium Oxalate
Abbreviations used in acid base accounting: T.S.= Total Sulfur, AB= Acid Base, ABP= Acid Base Potential, PyrS= Pyritic Sulfur, Pyr+Org= Pyritic Sulfur + Organic Sulfur, Neut. Pot.= Neutralization Potential
Miscellaneous Abbreviations: SAR= Sodium Adsorption Ratio, CEC= Cation Exchange Capacity, ESP= Exchangeable Sodium Percentage

Review: Joey Shepley
Joey Shepley, Soils Lab Supervisor

Inter-Mountain Laboratories, Inc.

Report ID: 010509502

1633 Terra Avenue
Sheridan, WY 82801

Soil Analysis Report

Canyon Fuel Co

Dugout Mine -Canyon Fuel
P.O. Box 1029
Wellington, UT 84542

Client Project ID: Dugout Canyon
Date Received: 10/12/05

Set #0105S09502
Report Date: 11/28/05

Lab Id	Sample Id	Depths (Inches)	Very Fine Sand %	Field Capacity %	Wilt Point %	TOC %	Total Sulfur %	T.S. AB t/1000t	Neutral. Pot. t/1000t	T.S. ABP t/1000t
0105S09524	SB-5	30 - 56	25.4	24.3	11.0	0.2	0.36	11.2	155	144
0105S09524D	SB-5	30 - 56	25.9	24.4	10.6	0.2	0.36	11.2	156	145
0105S09536	SB-8	0 - 8	27.8	21.1	8.9	1.2	<0.01	0.00	168	168
0105S09536D	SB-8	0 - 8	26.7	21.3	9.3	0.3	<0.01	0.00	165	165
0105S09538	SB-8	16 - 39	26.9	25.3	12.3	0.3	0.01	0.31	139	139
0105S09538D	SB-8	16 - 39	25.1	25.2	12.2	0.3	0.01	0.31	140	140
0105S09541	SB-9	0 - 7	21.0	24.3	12.2	0.4	<0.01	0.00	153	153
0105S09541D	SB-9	0 - 7	21.2	23.7	12.1	0.4	<0.01	0.00	154	154

These results only apply to the samples tested.

Abbreviations for extractants: PE= Saturated Paste Extract, H20Sol= water soluble,AB-DTPA= Ammonium Bicarbonate-DTPA, AAO= Acid Ammonium Oxalate
Abbreviations used in acid base accounting: T.S.= Total Sulfur, AB= Acid Base, ABP= Acid Base Potential, PyrS= Pyritic Sulfur, Pyr+Org= Pyritic Sulfur + Organic Sulfur, Neut. Pot.= Neutralization Potential
Miscellaneous Abbreviations: SAR= Sodium Adsorption Ratio, CEC= Cation Exchange Capacity, ESP= Exchangeable Sodium Percentage

Reviewed by: Joey Shelley
Joey Shelley, Soils Lab Supervisor

Inter-Mountain Laboratories, Inc.

Report ID: 010509502

1633 Terra Avenue
Sheridan, WY 82801

Soil Analysis Report
Canyon Fuel Co
Dugout Mine -Canyon Fuel
P.O. Box 1029
Wellington, UT 84542

Client Project ID: Dugout Canyon
Date Received: 10/12/05

Set #0105S09502
Report Date: 11/28/05

Lab Id	Sample Id	Depths (Inches)	Boron ppm	Nitrogen Nitrate ppm	TKN %	Selenium ppm	Available Sodium meq/100g	Exchangeable Sodium meq/100g
0105S09524	SB-5	30 - 56	0.60	0.18	0.05	0.04	2.02	1.14
0105S09524D	SB-5	30 - 56	0.57	0.18	0.05	0.04	2.00	1.08
0105S09536	SB-8	0 - 8	0.13	0.74	0.05	<0.02	0.07	0.05
0105S09536D	SB-8	0 - 8	0.14	0.74	0.05	<0.02	0.07	0.06
0105S09538	SB-8	16 - 39	0.38	<0.02	0.06	<0.02	0.35	0.24
0105S09538D	SB-8	16 - 39	0.39	<0.02	0.06	<0.02	0.35	0.22
0105S09541	SB-9	0 - 7	0.29	1.32	0.09	<0.02	0.11	0.09
0105S09541D	SB-9	0 - 7	0.28	1.34	<0.01	<0.02	0.11	0.10

These results only apply to the samples tested.

Abbreviations for extractants: PE= Saturated Paste Extract, H20Sol= water soluble,AB-DTPA= Ammonium Bicarbonate-DTPA, AAO= Acid Ammonium Oxalate
Abbreviations used in acid base accounting: T.S.= Total Sulfur, AB= Acid Base, ABP= Acid Base Potential, PyrS= Pyritic Sulfur, Pyr+Org= Pyritic Sulfur + Organic Sulfur, Neut. Pot.= Neutralization Potential
Miscellaneous Abbreviations: SAR= Sodium Adsorption Ratio, CEC= Cation Exchange Capacity, ESP= Exchangeable Sodium Percentage

Revie[illegible]y: Joey Sheeley
Joey Sheeley, Soils Lab Supervisor

APPENDIX C

Soil Suitability Ratings

Table 4. Soil and Spoil Suitability/Unsuitability Evaluation

CRITERIA	GOOD	FAIR	POOR	UNACCEPTABLE
Saturation %	25 to 55	≥56 - 80	<25 >80	
pH	6.5 to 8.2	6.0 to 6.4 8.2 to 8.5	5.5 to 6.0 8.6 to 9.0	< 5.5 > 9.0
EC (mS/cm 25°C)	0 to 4	4 to 8	8 to 15	> 15
SAR [a,b]	0 to 4	5 to 10	10 to 14	> 14
%$CaCO_3$	<15	15 - 30	>30	
Texture [c]	sl, l, sil, scl, vfsl, fsl	c, sicl, sc, ls, lfs	sic, s, sc, c, cos, fs, vfs	g, vcos
Total Organic Carbon	<10%			10%
Available Water Capacity[d]	> 0.10 moderate	0.05 to 0.10 low	< 0.05 very low	
K factor[e]	< 0.37	0.37	> 0.37	

[a] For clay textured soils unacceptable is SAR >14. For sandy textured soils unacceptable is >20.

[b] For most Western soils, the SAR to ESP relationship is usually 1:1, up to ESP ≈ 20. If SAR>20, then determine ESP. (Evangelou, 2000.)

[c] s=sand, l= loam, si= silt, c= clay, v= very, f= fine, co=coarse, g=gravel

[d] Available Water Capacity is adjusted for texture and SAR.

[e] K factor recommendations from the USDA Soil Conservation Service.1978. National Soils Handbook Notice 24. (3/31/78). NSH Part II –403.6(a). For Prime Farmland soils, the K factor times the percent slope should be a value of five or less for minimal erosion hazard.

Table 9. Acidity/Toxicity Evaluation

PARAMETERS	UNACCEPTABLE LEVELS
Soluble Selenium	≥ 0.15 mg/kg [1] ≥0.10 mg/kg [2,3]
Available Boron	≥5.0 mg/kg
Acid/Base Potential	≤ 0 tons $CaCO_3$ /1000 tons overburden

[1] unacceptable level for the rooting zone (top four feet of fill) and/or ephemeral drainages with 100 year flood plains, top 4 feet fill

[2] unacceptable level for the top 4 feet of fill in surface-water impoundments.

[3] unacceptable level for intermittent/perennial drainages including 100 year flood plains

Ref: Guidelines for Management of Topsoil and Overburden, R645-301-200 SOILS, Utah Division of Oil, Gas and Mining, Draft June 2003

r·Mountain Laboratories, Inc.

ort ID: 010509502

1633 Terra Avenue
Sheridan, WY 82801

Copy with suitability notes

Soil Analysis Report
Canyon Fuel Co
Dugout Mine -Canyon Fuel
P.O. Box 1029
Wellington, UT 84542

Ratings are good for selected parameters unless noted as Fair, poor, or unacceptable

nt Project ID: Dugout Canyon

Received: 10/12/05

Set #0105S09502

Report Date: 11/17/05

d	Sample Id	Depths (Inches)	pH s.u.	Saturation %	EC @ 25°C dS/m	Calcium meq/L	Magnesium meq/L	Sodium meq/L	SAR	Sand %	Silt %	Clay %	Texture
)9502	SB-1	0 - 5	7.6	33.1	0.38	2.64	0.93	0.24	0.18	33.0	45.0	22.0	LOAM
)9503	SB-1	5 - 13	7.8	37.3	0.33	1.34	0.71	1.19	1.17	26.0	48.0	26.0	LOAM
)9504	SB-1	13 - 32	7.9	40.4	2.12	7.85	5.07	10.7	4.20 F	37.0	41.0	22.0	LOAM
)9505	SB-1	32 - 54	7.6	37.9	4.83 F	25.8	16.9	17.5	3.78	36.0	38.0	26.0	LOAM
)9506	SB-1	54 - 78	7.7	35.5	4.00 F	20.6	24.0	9.25	1.96	42.0	42.0	16.0	LOAM
)9507	SB-2	0 - 8	7.7	31.4	0.39	3.15	0.67	0.33	0.24	47.0	37.0	16.0	LOAM
)9508	SB-2	8 - 15	7.7	29.7	0.30	2.89	0.73	0.26	0.20	50.0	30.0	20.0	LOAM
)9509	SB-2	15 - 26	7.8	30.2	0.22	1.57	0.42	0.46	0.46	43.0	37.0	20.0	LOAM
)9510	SB-2	26 - 48	7.7	46.4	0.83	6.30	1.51	1.01	0.51	14.0	58.0	28.0	SILTY CLAY LOAM (F)
)9511	SB-2	48 - 70	7.7	43.6	3.43	21.5	21.3	5.68	1.23	19.0	55.0	26.0	SILT LOAM
)9512	SB-3	0 - 6	7.8	30.6	0.46	3.03	1.20	0.27	0.19	40.0	42.0	18.0	LOAM
)9513	SB-3	6 - 18	7.9	35.9	0.33	1.54	0.91	1.00	0.91	35.0	39.0	26.0	LOAM
)9514	SB-3	18 - 38	8.2 F	38.0	1.05	1.81	0.92	7.50	6.42 F	36.0	42.0	22.0	LOAM
)9515	SB-3	38 - 45	7.8	25.0	4.19 F	19.5	10.7	24.7	6.36 F	72.0	15.0	13.0	SANDY LOAM
)9516	SB-3	45 - 72	7.6	33.4	2.46	12.5	7.17	5.25	1.67	40.0	41.0	19.0	LOAM
)9517	SB-4	0 - 5	7.8	36.6	0.42	2.14	0.82	0.71	0.58	30.0	44.0	26.0	LOAM
)9518	SB-4	5 - 18	8.2 F	32.5	0.35	1.00	0.47	1.87	2.18	43.0	37.0	20.0	LOAM
)9519	SB-4	18 - 31	8.4 F	36.0	0.63	0.96	0.54	4.36	5.04 F	38.0	41.0	21.0	LOAM
)9520	SB-4	31 - 44	7.9	26.3	4.52 F	19.1	22.5	17.0	3.72	70.0	14.0	16.0	SANDY LOAM
)9521	SB-4	44 - 64	7.7	33.4	4.57 F	21.7	18.3	16.1	3.59	42.0	38.0	20.0	LOAM
)9522	SB-5	0 - 12	7.9	28.0	0.30	1.98	0.68	0.47	0.41	50.0	32.0	18.0	LOAM
)9523	SB-5	12 - 30	8.3 F	35.3	0.59	1.04	0.65	4.06	4.42	31.0	47.0	22.0	LOAM
)9524	SB-5	30 - 56	7.8	36.2	5.65 F	21.9	19.3	24.3	5.35 F	39.0	37.0	24.0	LOAM
)9525	SB-5	56 - 68	7.9	32.8	5.39 F	21.4	29.3	18.9	3.75	44.0	38.0	18.0	LOAM
)9526	SB-6	0 - 8	8.0	32.0	0.67	2.12	1.03	2.51	2.00	48.0	36.0	16.0	LOAM
)9527	SB-6	8 - 17	8.3 F	31.5	0.53	1.23	0.50	3.74	4.02	52.0	30.0	18.0	SANDY LOAM
)9528	SB-6	17 - 29	8.2 F	31.3	0.42	0.96	0.37	2.96	3.63	38.0	38.0	24.0	LOAM

All Good

results only apply to the samples tested. 6.5-8.1 = Good; 8.2-8.5 = Fair; <4 = Good; 4 to 8 = Fair; <4 = Good; 5 to 10 = Fair; L + SL = Good; SCL = Fair

iations for extractants: PE= Saturated Paste Extract, H20Sol= water soluble,AB-DTPA= Ammonium Bicarbonate-DTPA, AAO= Acid Ammonium Oxalate

iations used in acid base accounting: T.S.= Total Sulfur, AB= Acid Base, ABP= Acid Base Potential, PyrS= Pyritic Sulfur, Pyr+Org= Pyritic Sulfur + Organic Sulfur, Neut. Pot.= Neutralization Potential

aneous Abbreviations: SAR= Sodium Adsorption Ratio, CEC= Cation Exchange Capacity, ESP= Exchangeable Sodium Percentage

ved By: Joey Shelley

Joey [illegible] Soils Lab Supervisor

Mountain Laboratories, Inc.

ort ID: 010509502

1633 Terra Avenue
Sheridan, WY 82801

Soil Analysis Report

Canyon Fuel Co

Dugout Mine -Canyon Fuel

P.O. Box 1029

Wellington, UT 84542

vfs acts like silt

very fine sand content is high

nt Project ID: Dugout Canyon

Set #0105S09502

Received: 10/12/05

AWC = FC − WP

Report Date: 11/17/05

d	Sample Id	Depths (Inches)	Very Fine Sand %	Field Capacity %	Avail Water Cap %	Wilt Point %	TOC %	Total Sulfur %	T.S. AB t/1000t	Neutral. Pot. t/1000t	T.S. ABP t/1000t	Very fine sand + silt %	Total sand minus vfs %	Particle Size Class
09502	SB-1	0 - 5	20.9	23.1	11.4	9.5	0.3	<0.01	0.00	157	157	65.9	12.1	Fine silty
09503	SB-1	5 - 13	23.2	25.4	12.6	12.8	0.3	0.01	0.31	167	166	71.2	2.8	Fine silty
09504	SB-1	13 - 32	28.6	23.9	11.2	12.7	<0.1	<0.01	0.00	148	148	69.6	8.4	Fine silty
09505	SB-1	32 - 54	27.6	24.8	12.4	12.4	0.2	0.44	13.7	141	127	65.2	8.4	Fine silty
09506	SB-1	54 - 78	33.2	26.1	19.8	6.3	<0.1	0.01	0.31	154	153	75.2	8.8	Coarse silty
09507	SB-2	0 - 8	28.2	21.6	15.1	6.5	0.3	<0.01	0.00	136	136	65.2	18.8	Fine silty
09508	SB-2	8 - 15	23.6	17.2	9.6 F	7.6	<0.1	0.01	0.31	146	145	53.6	26.4	Fine loamy
09509	SB-2	15 - 26	29.4	21.8	14.3	7.5	0.6	0.01	0.31	146	145	66.4	13.6	Fine silty
09510	SB-2	26 - 48	13.4	29.4	13.3	16.1	0.9	0.01	0.31	180	180	71.4	8.6	Fine silty
09511	SB-2	48 - 70	15.6	26.9	13.5	13.4	<0.1	0.30	9.37	163	154	70.6	3.4	Fine silty
09512	SB-3	0 - 6	23.0	23.2	14.5	8.7	1.4	0.01	0.31	148	148	65.0	17.0	Fine loamy
09513	SB-3	6 - 18	24.3	22.8	12.2	10.6	0.2	<0.01	0.00	164	164	63.3	10.7	Fine silty
09514	SB-3	18 - 38	24.8	21.0	9.7 F	11.3	0.3	0.01	0.31	146	146	66.8	11.2	Fine silty
09515	SB-3	38 - 45	15.5	13.1	7.9 F	5.2	<0.1	<0.01	0.00	181	181	30.5	56.5	Coarse loamy
09516	SB-3	45 - 72	24.5	24.5	17.0	7.5	0.2	0.01	0.31	159	158	65.5	15.5	Fine loamy
09517	SB-4	0 - 5	21.9	24.8	13.4	11.4	0.3	0.01	0.31	164	164	65.9	8.1	Fine silty
09518	SB-4	5 - 18	22.7	23.0	13.6	9.4	0.3	<0.01	0.00	165	165	59.7	20.3	Fine loamy
09519	SB-4	18 - 31	26.7	22.2	10.7	11.5	0.2	<0.01	0.00	155	155	67.7	11.3	Fine silty
09520	SB-4	31 - 44	13.5	17.3	11.4	5.9	<0.1	<0.01	0.00	184	184	27.5	56.5	Coarse loamy
09521	SB-4	44 - 64	28.2	25.0	16.4	8.6	0.2	<0.01	0.00	154	154	66.2	13.8	Fine silty
09522	SB-5	0 - 12	24.1	19.0	11.7	7.3	0.3	0.01	0.31	165	165	56.1	25.9	Fine loamy
09523	SB-5	12 - 30	21.5	22.9	12.9	10.0	0.3	0.01	0.31	144	144	68.5	9.5	Fine silty
09524	SB-5	30 - 56	25.4	24.3	13.3	11.0	0.2	0.36	11.2	155	144	62.4	13.6	Fine silty
09525	SB-5	56 - 68	28.8	23.3	14.6	8.7	0.1	0.32	10.0	139	129	66.8	15.2	Fine loamy
09526	SB-6	0 - 8	31.3	20.0	11.2	8.8	0.4	0.01	0.31	166	165	67.3	16.7	Coarse loamy
09527	SB-6	8 - 17	28.7	17.4	8.4 F	9.0	0.4	<0.01	0.00	158	158	58.7	23.3	Fine loamy/C.L.
09528	SB-6	17 - 29	21.1	19.1	7.8 F	11.3	0.2	0.02	0.62	155	154	59.1	16.9	Fine loamy

All acceptable

results only apply to the samples tested.

>10% = Good
5 to 10% = Fair
<10% = Good

iations for extractants: PE= Saturated Paste Extract, H20Sol= water soluble,AB-DTPA= Ammonium Bicarbonate-DTPA, AAO= Acid Ammonium Oxalate

iations used in acid base accounting: T.S.= Total Sulfur, AB= Acid Base, ABP= Acid Base Potential, PyrS= Pyritic Sulfur, Pyr+Org= Pyritic Sulfur + Organic Sulfur, Neut. Pot.= Neutralization Potential

laneous Abbreviations: SAR= Sodium Adsorption Ratio, CEC= Cation Exchange Capacity, ESP= Exchangeable Sodium Percentage

ved By: Joe Shelley

Joe Shelley, Soils Lab Supervisor

Mountain Laboratories, Inc.

ort ID: 010509502

1633 Terra Avenue
Sheridan, WY 82801

Soil Analysis Report

Canyon Fuel Co

Dugout Mine -Canyon Fuel

P.O. Box 1029

Wellington, UT 84542

it Project ID: Dugout Canyon

Received: 10/12/05

Set #0105S09502

Report Date: 11/17/05

d	Sample Id	Depths (Inches)	Boron ppm	Nitrogen Nitrate ppm	TKN %	Selenium ppm	Available Sodium meq/100g	Exchangeable Sodium meq/100g
)9502	SB-1	0 - 5	0.24	1.22	0.09	<0.02	0.10	0.09
)9503	SB-1	5 - 13	0.45	0.26	0.13	<0.02	0.26	0.22
)9504	SB-1	13 - 32	0.67	0.02	0.08	<0.02	1.24	0.81
)9505	SB-1	32 - 54	0.55	0.36	0.09	High 0.14	1.51	0.85
)9506	SB-1	54 - 78	0.41	1.70	0.06	0.16 *U	0.73	0.40
)9507	SB-2	0 - 8	0.12	0.90	0.08	<0.02	0.09	0.08
)9508	SB-2	8 - 15	0.17	0.40	0.09	<0.02	0.08	0.07
)9509	SB-2	15 - 26	0.12	0.24	0.06	<0.02	0.13	0.12
)9510	SB-2	26 - 48	0.26	0.16	0.09	<0.02	0.22	0.17
)9511	SB-2	48 - 70	1.14	0.26	0.05	0.10	0.60	0.35
)9512	SB-3	0 - 6	0.19	3.34	0.06	<0.02	0.08	0.07
)9513	SB-3	6 - 18	0.29	0.18	0.08	<0.02	0.39	0.35
)9514	SB-3	18 - 38	0.31	0.78	0.08	<0.02	1.61	1.33
)9515	SB-3	38 - 45	0.22	3.02	0.07	0.02	1.34	0.72
)9516	SB-3	45 - 72	0.23	0.94	0.04	0.02	0.50	0.32
)9517	SB-4	0 - 5	0.18	2.46	0.09	<0.02	0.16	0.13
)9518	SB-4	5 - 18	0.32	0.32	0.07	<0.02	0.52	0.46
)9519	SB-4	18 - 31	0.33	0.18	0.10	<0.02	1.27	1.11
)9520	SB-4	31 - 44	0.43	0.40	0.06	0.04	1.05	0.60
)9521	SB-4	44 - 64	0.25	0.32	0.06	0.02	1.26	0.72
)9522	SB-5	0 - 12	0.24	0.42	0.04	<0.02	0.10	0.09
)9523	SB-5	12 - 30	0.32	<0.02	0.08	<0.02	1.10	0.96
)9524	SB-5	30 - 56	0.60	0.18	0.05	0.04	2.02	1.14
)9525	SB-5	56 - 68	0.51	0.24	0.04	0.28 *U	1.34	0.72
)9526	SB-6	0 - 8	0.25	0.76	0.06	<0.02	0.38	0.30
)9527	SB-6	8 - 17	0.31	0.28	0.06	<0.02	0.80	0.68
)9528	SB-6	17 - 29	0.25	0.10	0.05	<0.02	0.95	0.86

results only apply to the samples tested. All acceptable < 5.0

*U= Unacceptable > 0.15

riations for extractants: PE= Saturated Paste Extract, H20Sol= water soluble,AB-DTPA= Ammonium Bicarbonate-DTPA, AAO= Acid Ammonium Oxalate

riations used in acid base accounting: T.S.= Total Sulfur, AB= Acid Base, ABP= Acid Base Potential, PyrS= Pyritic Sulfur, Pyr+Org= Pyritic Sulfur + Organic Sulfur, Neut. Pot.= Neutralization Potential

laneous Abbreviations: SAR= Sodium Adsorption Ratio, CEC= Cation Exchange Capacity, ESP= Exchangeable Sodium Percentage

wed By: Joey Shurley

In[illegible]ow Soils Lab Supervisor

·Mountain Laboratories, Inc.

ort ID: 010509502

1633 Terra Avenue
Sheridan, WY 82801

Soil Analysis Report

Canyon Fuel Co

Dugout Mine -Canyon Fuel

P.O. Box 1029

Wellington, UT 84542

t Project ID: Dugout Canyon

Received: 10/12/05

Set #0105S09502

Report Date: 11/17/05

l	Sample Id	Depths (Inches)	pH s.u.	Saturation %	EC @ 25°C dS/m	Calcium meq/L	Magnesium meq/L	Sodium meq/L	SAR	Sand %	Silt %	Clay %	Texture
9529	SB-6	29 - 48	7.9	36.8	4.51 F	19.6	13.3	23.7	5.86 F	39.0	39.0	22.0	LOAM
9530	SB-6	48 - 68	7.9	33.9	8.38 P*	20.9	48.8	42.4	7.19 F	39.0	37.0	24.0	LOAM
9531	SB-7	0 - 3	7.9	29.6	0.80	4.46	1.41	1.44	0.84	49.0	38.0	13.0	LOAM
9532	SB-7	3 - 8	8.0	31.1	0.30	1.56	0.64	0.54	0.52	40.0	40.0	20.0	LOAM
9533	SB-7	8 - 23	8.2 F	29.7	0.41	1.15	0.59	2.13	2.28	39.0	43.0	18.0	LOAM
9534	SB-7	23 - 50	8.0	25.6	4.76 F	15.8	12.1	29.6	7.93 F	63.0	19.0	18.0	SANDY LOAM
9535	SB-7	50 - 72	7.8	33.5	5.85 F	18.8	24.0	30.7	6.64 F	40.0	36.0	24.0	LOAM
9536	SB-8	0 - 8	7.8	29.0	0.36	2.49	1.01	0.54	0.41	48.0	32.0	20.0	LOAM
9537	SB-8	8 - 16	8.0	31.3	0.28	1.73	0.76	0.44	0.39	43.0	38.0	19.0	LOAM
9538	SB-8	16 - 39	7.8	37.5	2.24	18.9	9.22	3.04	0.81	35.0	41.0	24.0	LOAM
9539	SB-8	39 - 47	7.7	23.8 P*	2.75	21.0	10.7	5.66	1.42	69.0	19.0	12.0	SANDY LOAM
9540	SB-8	47 - 72	7.6	36.9	3.06	22.4	10.9	6.64	1.63	34.0	40.0	26.0	LOAM
9541	SB-9	0 - 7	7.9	38.5	0.37	2.37	0.91	0.43	0.34	30.0	44.0	26.0	LOAM
9542	SB-9	7 - 20	8.3 F	39.0	0.33	0.90	0.49	2.05	2.46	31.0	47.0	22.0	LOAM
9543	SB-9	20 - 36	8.3 F	36.3	1.90	2.12	2.91	11.3	7.12 F	32.0	48.0	20.0	LOAM
9544	SB-9	36 - 72	8.3 F	34.0	12.2 P*	16.9	63.2	75.5	11.9 P*	42.0	37.0	21.0	LOAM

6.5 To 8.1 = Good
8.2 To 8.5 = Fair

< 4 = Good
4 To 8 = Fair
8 To 15 = Poor

< 4 = Good
5 To 10 = Fair
10 To 14 = Poor

L + SL = Good

Saturation %
< 25 = Poor
25 To 55 Is Good

esults only apply to the samples tested.

ations for extractants: PE= Saturated Paste Extract, H20Sol= water soluble,AB-DTPA= Ammonium Bicarbonate-DTPA, AAO= Acid Ammonium Oxalate
ations used in acid base accounting: T.S.= Total Sulfur, AB= Acid Base, ABP= Acid Base Potential, PyrS= Pyritic Sulfur, Pyr+Org= Pyritic Sulfur + Organic Sulfur, Neut. Pot.= Neutralization Potential
ıneous Abbreviations: SAR= Sodium Adsorption Ratio, CEC= Cation Exchange Capacity, ESP= Exchangeable Sodium Percentage

ed By: Joey Sheeley

Inc... Soils Lab Supervisor

·Mountain Laboratories, Inc.

ırt ID: 010509502

1633 Terra Avenue
Sheridan, WY 82801

Soil Analysis Report
Canyon Fuel Co
Dugout Mine -Canyon Fuel
P.O. Box 1029
Wellington, UT 84542

t Project ID: Dugout Canyon
Received: 10/12/05

Set #0105S09502
Report Date: 11/17/05

AWC = FC - WP

ı	Sample Id	Depths (inches)	Very Fine Sand %	Field Capacity %	Avail. Water Cap %	Wilt Point %	TOC %	Total Sulfur %	T.S. AB t/1000t	Neutral. Pot. t/1000t	T.S. ABP t/1000t	Very Fine Sand + Silt %	Total Sand − VFS %	Particle Size Class
9529	SB-6	29 - 48	24.9	23.6	11.0	12.6	0.2	0.12	3.75	127	124	63.9	14.1	Fine silty
9530	SB-6	48 - 68	23.9	24.2	13.1	11.1	0.2	0.28	8.75	143	134	60.9	15.1	Fine loamy
9531	SB-7	0 - 3	30.8	20.8	13.9	6.9	0.5	0.01	0.31	153	153	68.8	18.2	Coarse loamy
9532	SB-7	3 - 8	26.2	21.9	11.6	10.3	0.3	0.01	0.31	163	162	66.2	15.4	Coarse loamy
9533	SB-7	8 - 23	24.6	21.2	11.8	9.4	0.3	0.01	0.31	168	168	67.6	14.4	Fine silty
9534	SB-7	23 - 50	12.4	15.1	7.6 F	7.5	<0.1	<0.01	0.00	197	197	31.4	50.6	Coarse loamy /FL at border
9535	SB-7	50 - 72	21.0	21.6	10.5	11.1	0.2	0.02	0.62	141	140	57.0	19.0	Fine loamy
9536	SB-8	0 - 8	27.8	21.1	12.2	8.9	1.2	<0.01	0.00	168	168	59.8	20.2	Fine loamy
9537	SB-8	8 - 16	28.1	23.2	13.3	9.9	0.3	0.01	0.31	155	155	66.1	14.9	Fine silty
9538	SB-8	16 - 39	26.9	25.3	13.0	12.3	0.3	0.01	0.31	139	139	67.9	8.1	Fine silty
9539	SB-8	39 - 47	16.1	14.5	8.7 F	5.8	<0.1	0.03	0.94	195	194	35.1	52.9	Coarse loamy
9540	SB-8	47 - 72	24.3	26.3	14.5	11.8	0.3	0.02	0.62	146	145	64.3	9.7	Fine silty
9541	SB-9	0 - 7	21.0	24.3	12.1	12.2	0.4	<0.01	0.00	153	153	65.0	9.0	Fine silty
9542	SB-9	7 - 20	21.4	23.4	10.3	13.1	0.3	0.01	0.31	163	162	68.4	9.6	Fine silty
9543	SB-9	20 - 36	21.3	22.9	10.8	12.1	<0.1	<0.01	0.00	162	162	69.3	10.7	Fine silty
9544	SB-9	36 - 72	23.1	22.5	11.3	11.2	0.1	0.33	10.3	150	139	60.1	13.9	Fine silty

Very fine sand is a high proportion of the total sand in most of these soils. It is grouped with silt for many interpretations

AWC
>10% = Good
5 to 10% = Fair

All acceptable
> 0

esults only apply to the samples tested.

iations for extractants: PE= Saturated Paste Extract, H20Sol= water soluble,AB-DTPA= Ammonium Bicarbonate-DTPA, AAO= Acid Ammonium Oxalate
iations used in acid base accounting: T.S.= Total Sulfur, AB= Acid Base, ABP= Acid Base Potential, PyrS= Pyritic Sulfur, Pyr+Org= Pyritic Sulfur + Organic Sulfur, Neut. Pot.= Neutralization Potential
aneous Abbreviations: SAR= Sodium Adsorption Ratio, CEC= Cation Exchange Capacity, ESP= Exchangeable Sodium Percentage

ved By: Joey Shelley
Joey Shelley, Soils Lab Supervisor

·Mountain Laboratories, Inc.

ort ID: 010509502

1633 Terra Avenue
Sheridan, WY 82801

Soil Analysis Report

Canyon Fuel Co

Dugout Mine -Canyon Fuel

P.O. Box 1029

Wellington, UT 84542

t Project ID: Dugout Canyon

Received: 10/12/05

Set #0105S09502

Report Date: 11/17/05

l	Sample Id	Depths (Inches)	Boron ppm	Nitrogen Nitrate ppm	TKN %	Selenium ppm	Available Sodium meq/100g	Exchangeable Sodium meq/100g
9529	SB-6	29 - 48	0.65	0.18	0.07	<0.02	2.08	1.21
9530	SB-6	48 - 68	0.59	0.48	0.05	0.04	2.86	1.42
9531	SB-7	0 - 3	0.24	8.10	0.08	<0.02	0.15	0.11
9532	SB-7	3 - 8	0.23	2.04	0.06	<0.02	0.12	0.10
9533	SB-7	8 - 23	0.30	0.40	0.08	<0.02	0.40	0.34
9534	SB-7	23 - 50	0.30	1.12	0.04	0.02	1.71	0.95
9535	SB-7	50 - 72	0.16	2.24	0.01	<0.02	2.45	1.42
9536	SB-8	0 - 8	0.13	0.74	0.05	<0.02	0.07	0.05
9537	SB-8	8 - 16	0.23	0.22	0.06	<0.02	0.12	0.11
9538	SB-8	16 - 39	0.38	<0.02	0.06	<0.02	0.35	0.24
9539	SB-8	39 - 47	0.13	1.04	0.06	0.02	0.36	0.23
9540	SB-8	47 - 72	0.27	0.50	0.04	0.14 ✓	0.64	0.39
9541	SB-9	0 - 7	0.29	1.32	0.09	<0.02	0.11	0.09
9542	SB-9	7 - 20	0.35	<0.02	0.07	<0.02	0.54	0.46
9543	SB-9	20 - 36	0.24	0.08	0.10	0.02	1.79	1.38
9544	SB-9	36 - 72	0.31	0.34	0.05	0.10	5.61	3.04

All acceptable @ < 5.0

.014 is high but not unacceptable U = > 0.15

esults only apply to the samples tested.

ations for extractants: PE= Saturated Paste Extract, H20Sol= water soluble,AB-DTPA= Ammonium Bicarbonate-DTPA, AAO= Acid Ammonium Oxalate
ations used in acid base accounting: T.S.= Total Sulfur, AB= Acid Base, ABP= Acid Base Potential, PyrS= Pyritic Sulfur, Pyr+Org= Pyritic Sulfur + Organic Sulfur, Neut. Pot.= Neutralization Potential
ıneous Abbreviations: SAR= Sodium Adsorption Ratio, CEC= Cation Exchange Capacity, ESP= Exchangeable Sodium Percentage

ed By: Joey Shelley

Joey Shelley, Soils Lab Supervisor

GUIDE FOR TEXTURAL CLASSIFICATION IN SOIL FAMILIES

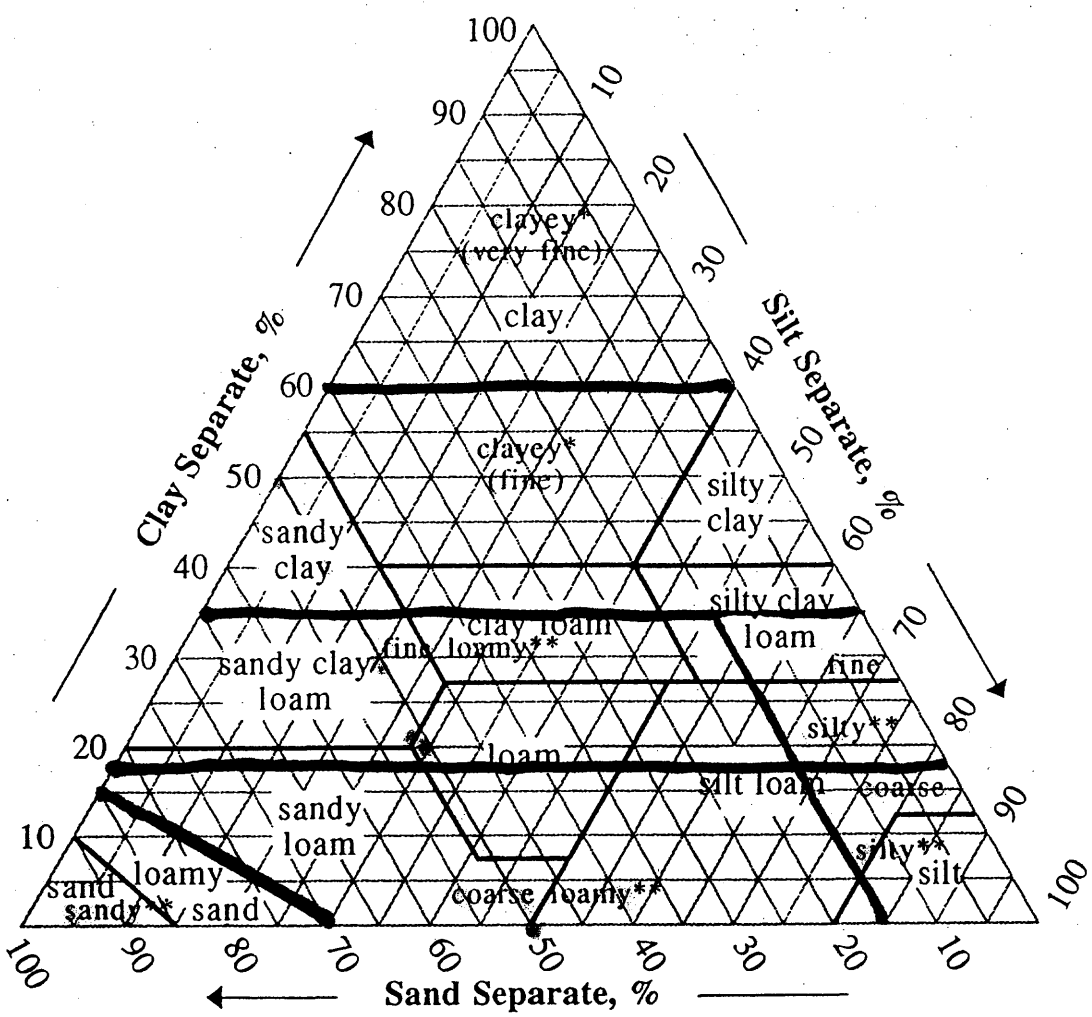

* Clay-size carbonate is treated as silt.

** Very fine sand (0.05 - 0.1 is treated as silt for family groupings; coarse fragments are considered the equivalent of coarse sand in the boundary between the silty and loamy classes.

COMPARISON OF PARTICLE SIZE SCALES

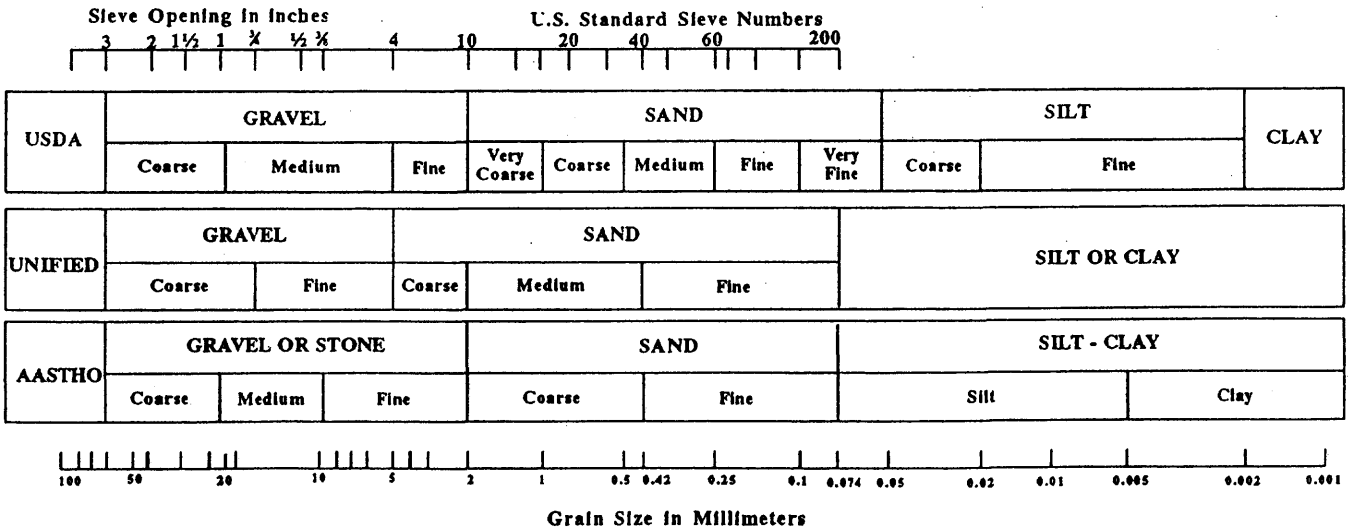

Exhibit 618-8 Texture Triangle and Particle-Size Limits of AASHTO, USDA, and Unified Classification Systems.

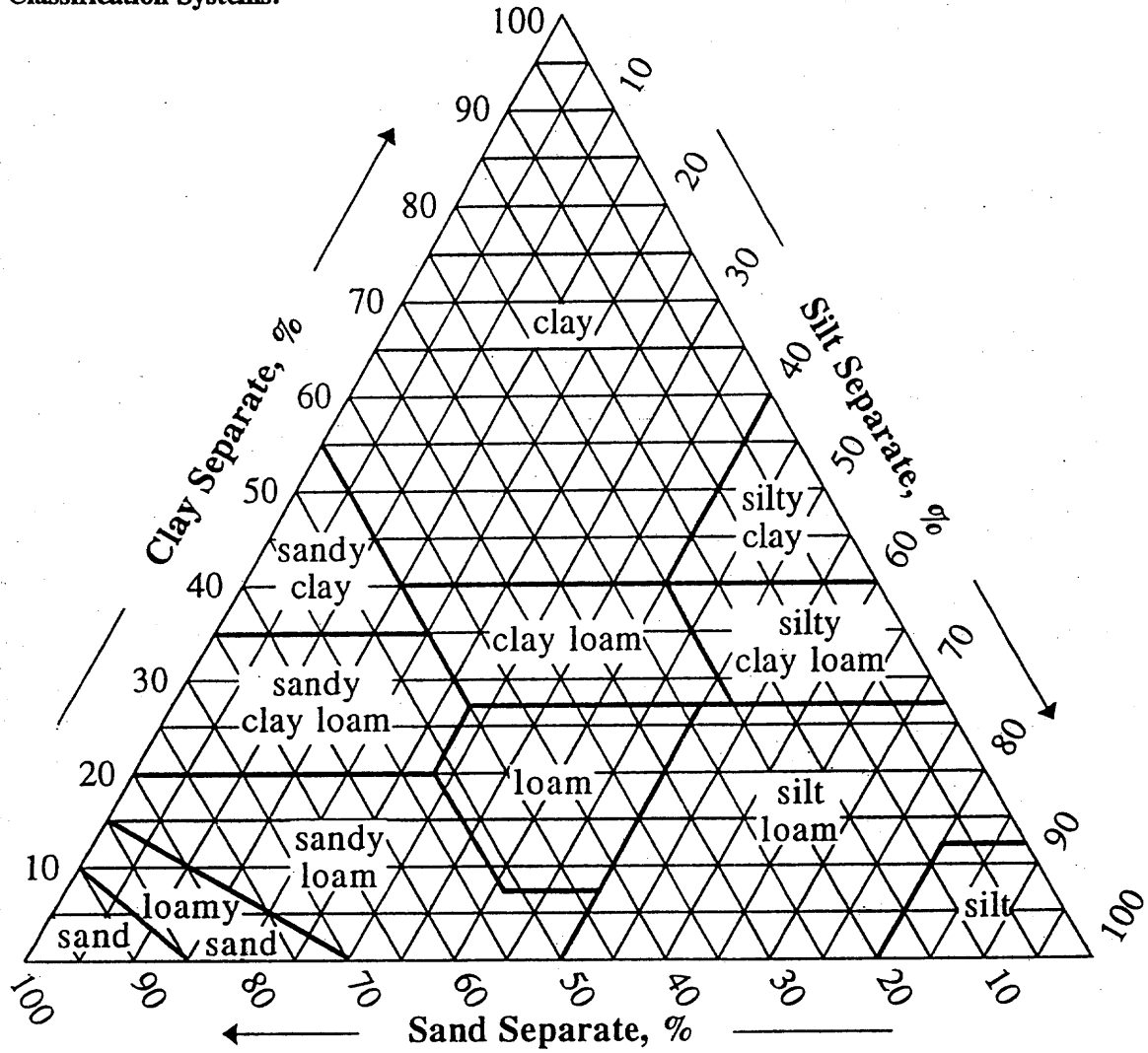

COMPARISON OF PARTICLE SIZE SCALES

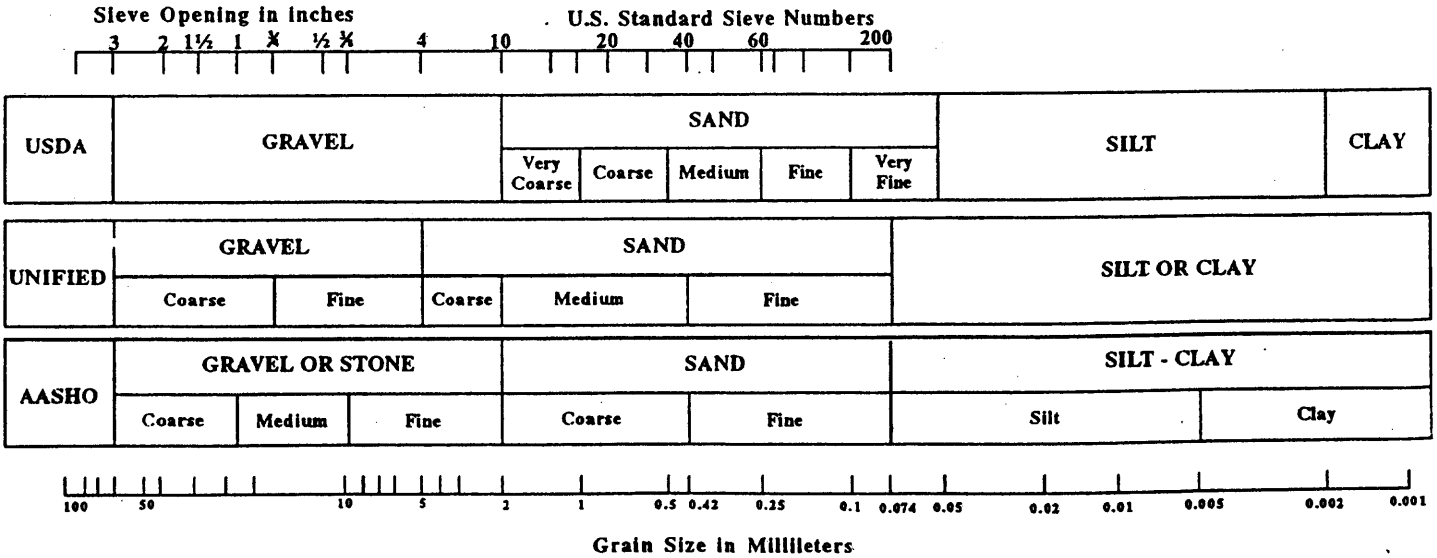

(430-VI-NSSH, Nov. 1993)

APPENDIX D

Soil Profile Descriptions
Carbon Area Soil Survey Mapping Information

Field Soil Profile Description Notations

This is a guide to assist in understanding the notations on the soil description forms. These are not all inclusive but are meant to apply to common situations in the mountains and foothills of central Utah.

Horizon:

Standard letter designations used for soil layers. Commonly used designations are:

A	Surface layer usually of dark color due to accumulation of organic matter; topsoil.
B	Altered soil layer, often associated with subsoil.
	BT – Increase in clay
	BK – Increase in carbonates
	BW – Color or structure change
C	Relatively unaltered parent materials from which the soils have formed.
R	Hard bedrock; as sandstone
CR	Soft bedrock; as shale

A "B" horizon may have dark colors and have high to moderate amounts of organic matter but be designated as a "B" horizon due to soil changes as noted above.

Depth:

Depth interval of the soil layer. Usually expressed in inches unless noted otherwise.

Color:

Dry and moist colors are based on the Munsell Soil Color Chart and give the hue, value, and chroma. Connotative color descriptions may be added.

Texture:

Texture and texture modifier abbreviations

S	Sand	SCL	Sandy	CB	Cobbly	GR.	Gravely
LS	Loamy Sand	CL	Clay Loam	CBV	Very Cobbly	GRV	Very Gravely
SL	Sandy Loam	SICL	Silty Clay Loam	CBX	Extremely Cobbly	GRX	Extremely Gravel
L	Loam	SIC	Silty Clay	CN	Channery	SH	Shaley
SIL	Silt Loam	C	Clay	CNV	Very Channery		
SI	Silt			CNX	Extremely Channery		

Structure:

Grade		Size		Type	
W	Weak	VF	Very Fine	PL	Platy
M	Moderate	F	Fine	GR	Granular
S	Strong	M	Medium	SBK	Subangular Blocky
		CO	Coarse	ABK	Angular Blocky
		VCO	Very Course	PR	Prismatic
				W	Weak Massive
				S	Strong Massive
				SG	Single Grained

Consistency:

Dry		Moist		Wet	
LO	Loose	LO	Loose	NS	Non Sticky
SO	Soft	VFR	Very Friable	SS	Slightly Sticky
SH	Slightly Hard	FR	Friable	S	Sticky
H	Hard	FI	Firm	VS	Very Sticky
VH	Very Hard	VFI	Very Firm	NP	Non Plastic
EH	Extremely Hard	EFI	Extremely Firm	SP	Slightly Plastic
				P	Plastic
				VP	Very Plastic

Reaction:

Effervescence (10% HCL)		pH	Reaction Class
		5.1 – 5.5	Strongly Acid
		5.6 – 6.0	Moderately Acid
EO	Non-Effervescent	6.1 – 6.5	Slightly Acid
SE	Slightly Effervescent	6.6 – 7.3	Neutral
EM	Moderately Effervescent	7.4 – 7.8	Mildly Alkaline
ES	Strongly Effervescent	7.9 – 8.4	Moderately Alkaline
EV	Violently Effervescent	8.5 – 9.0	Strongly Alkaline
		> 9.0	Very Strongly Alkaline

Horizon Boundaries:

Distinctness

A Abrupt (<2 cm thick)
C Clear (2 to 5 cm thick)
G Gradual (5 to 15 cm thick)
D Diffuse (>15 cm thick)

Topography

S Smooth (the boundary is a plane with few or no irregularities)
W Wavy (the boundary has undulations in which depressions are wider than they are deep).
I Irregular (the boundary has pockets that are deeper than they are wide)
B Broken (at least one of the horizons or layers separated by the boundary is discontinuous and the boundary is interrupted).

Rock Fragments: Expressed in percent by volume by size.

GR	Gravel	BL	Boulders
CB	Cobbles	CN	Channers
ST	Stones	FL	Flagstone

Roots: Roots are described in terms of quantity and size. Quantity is given first followed by the size class.

Quantity		Size	
F	Few	VF	Very Fine
C	Common	F	Fine
M	Many	M	Medium
		CO	Course

Quantity classes of roots are defined in terms of numbers of each size per unit area. One (1) square centimeter for very fine and fine roots and one (1) square decimeter for medium and coarse roots.

Few:	Less than 1 per unit area of the specified size
Common:	1 to 5 per unit area of the specified size
Many:	more than 5 per unit area of the specified size

The size classes are:

Very Fine:	Less than 1 mm in diameter
Fine:	1 to 2 mm in diameter
Medium:	2 to 5 mm in diameter
Coarse:	5 mm or larger in diameter

Roots larger than 10 mm in diameter may be described separately.

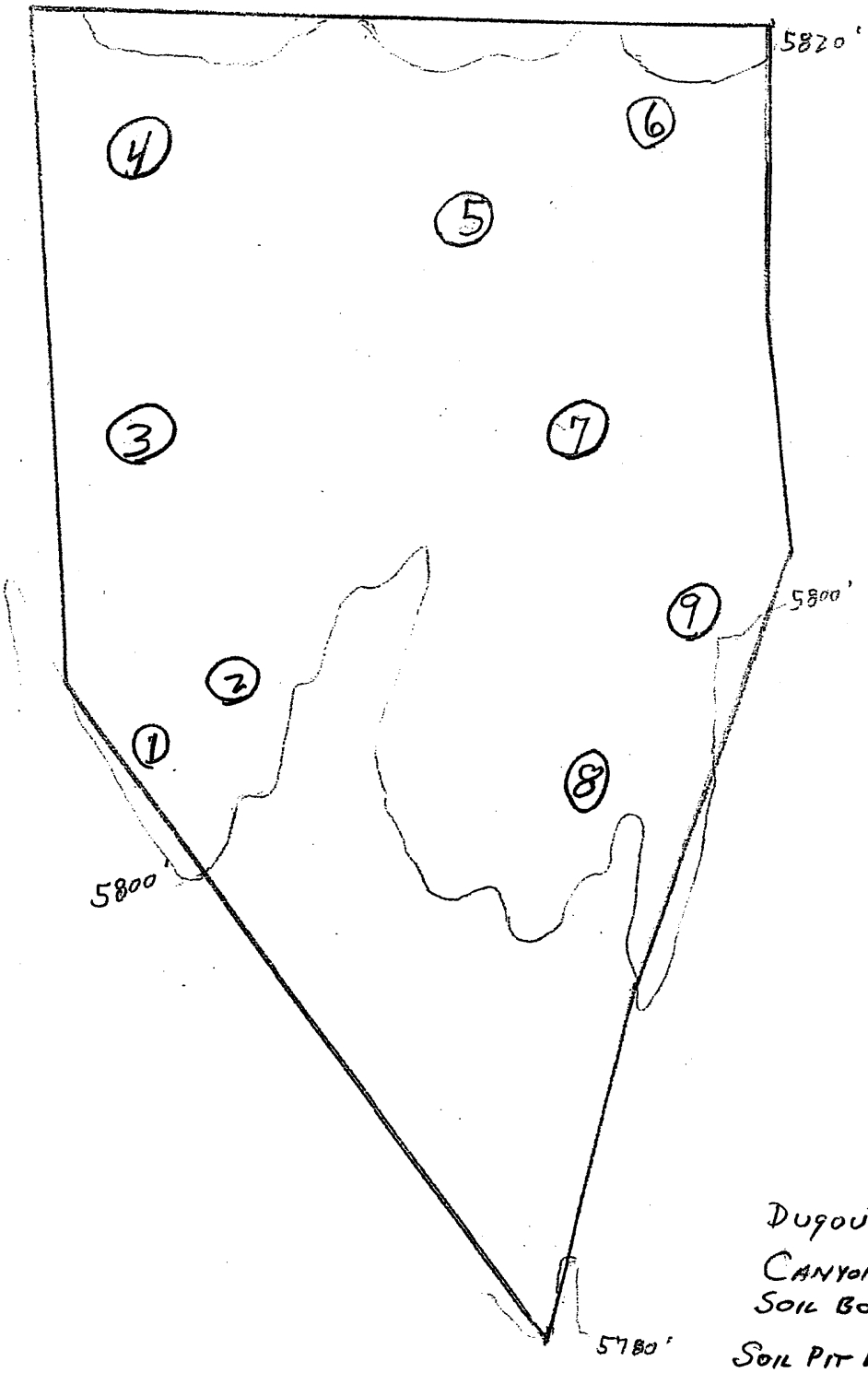

Dugout Canyon Mine
Canyon Fuel Co.
Soil Borrow Site
Soil Pit Locations

SCS-SOILS-232G

U.S. DEPARTMENT OF AGRICULTURE
SOIL CONSERVATION SERVICE

SOIL DESCRIPTION Dugout Soil Borrow

Soil type Razvola Carbon Area M.U. 91

File No. SB1

Area Dugout Mine Soil Borrow Site Carbon Co., UT | Date 10/5/05 | By: D. Larsen | Stop No.

Classification Fine-silty, mixed, active, calcareous, mesic Typic Torrifluvent

Location SB1, SE corner S12, T14S, R12E

N. veg. (or crop) Sagebrush, Indian ricegrass, salt bush | Climate Aridic Mesic

Parent material Alluvium

Physiography Alluvial fan, bottom (Clark Valley)

Relief Gentle | Drainage Well drained | Salt or alkali

Elevation about 5800 feet | Gr. water | Stoniness

Slope 4% | Moisture Mostly dry

Aspect South | Root distrib. | % Clay *

Erosion Gullied | % Coarse fragments * | % Coarser than V.F.S. *

Permeability Moderate

Additional notes

Sterling Miller Backhoe operator (Scamp Excavation)

12-36" many cicada casts (holes)

Samples SB1 0-5
5-13
13-32
32-54
54-78

Some columnar structure in B-horizon

* Control section average

Horizon	Depth inches	Color Dry	Color Moist	Texture	Structure	Consistence Dry	Consistence Moist	Consistence Wet	Reaction Lab pH	Boundary	% Rock Fragments	Root Distribution	Carbonates
A1	0-5	pale brown 2.5Y 6/3 to	2.5Y 4/3-5/3 light olive brown	* Loam	MFGR	SO	FR	S/P	es 7.6	cw	<5% few small gravel	many fine	-
AB	5-10	10YR 6/3 light yellowish brown	2.5Y 5/3	Loam	WM SBK	SH	FR-FI	S/P	es 7.8	cw	"	Common fine-med.	-
BK1	10-13			Loam	MM SBK	H	FI	S/P	es 7.8	gw	"	"	few light particles
BK2	13-32	No obs. except for light spots	dif.	Loam		H	VFI	S/P	ev 7.9	gw	"	Common to few fine-med	common light particles
BK3	32-54	Appears to be highest in carbonates (36-48)	2.5YR 5/3 to 10YR 4/4	Loam-SICL	SM SBK	VH	VFI	S/P	ev 7.6	gw	"	very few	Abundant white particles
BK4	54-72			Loam	MM SBK			S/P	ev 7.7	cw	"	"	common
BC	72-90	light yellowish br. 10YR 6/4	10YR 5/4-2.5Y 5/3	Loam	OM				es			0	not observed

* Loam texture is similar to silt loam

SCS-SOILS-232G

U.S. DEPARTMENT OF AGRICULTURE
SOIL CONSERVATION SERVICE

SOIL DESCRIPTION

Soil type Ravola | File No. SB2

Area Dugout Mine Soil Borrow, Carbon Co. UT | Date 10/5/05 | By: D. Larsen | Stop No.

Classification

Location SB2, SE center S17, T14S, R12E

N. veg. (or crop) Sagebrush (black?), snakeweed, Indian ricegrass | Climate Arid to Mesic

Parent material Alluvium

Physiography Fan, Alluvial

Relief Gentle | Drainage well drained | Salt or alkali

Elevation About 5810 feet | Gr. water | Stoniness

Slope 3-5% | Moisture

Aspect South | Root distrib. | % Clay *

Erosion Severe in area, slight at pit site | % Coarse fragments * | % Coarser than V.F.S. *

Permeability Med.

Additional notes Backhoe pit SB2

Sampled 0-8
8-15
15-26
26-48
48-70

* Control section average

Horizon	Depth inches	Color Dry	Color Moist	Texture	Structure	Consistence Dry	Consistence Moist	Consistence Wet	Reaction	Boundary	% Rock Fragments	Root Distribution	whitish Carbonates + channels	
A1	0-3	10YR 6/3-6/5	2.5Y 4/3-5/3 slightly towards 10YR	LOAM	WFPL-WFGR	SO	VFR	SS/SP	es 7.7	CS	5gr	Many fine-v.f. m		
A2	3-8	2.5Y 6/3	"	LOAM	WF-M GR	SO	FR	SS/SP	7.7	CW	10% gr in spots	"		
AB	8-15	"	"	LOAM	WFGR WFSBK	SH	FR-FI	SS/SP	7.7	CW	2-15 gr	Common f-m		
BK1	15-26	2.5Y 6/3	2.5Y 4/3	LOAM	WMSBK-OM	SH-H	FI	S/P	7.8	gw	<2	Few-common f-m	few	
BK2	26-48	2.5Y 5/3 to 6/3 mixed 2.5Y 8/1 patches (white)	2.5Y 4/2	SILTY CLAY LOAM	MMSBK	H	FI	S/P	7.7	CW	<2	few	Many	Carbonate concretions
BK3	48-76	"	"	SILT LOAM	MM SBK	H	VFI	S/P	7.7				Abundant	

SCS-SOILS-232G

U.S. DEPARTMENT OF AGRICULTURE
SOIL CONSERVATION SERVICE

SOIL DESCRIPTION

Soil type

File No. SB 3

Area Dugout Mine Soil Borrow Site Carbon Co, UT | Date 9/5/05 | By: D. Larsen | Stop No. 3

Classification

Location SB3 west side S17, T14S, R12E

N. veg. (or crop) Saltbush, Indian ricegrass, prickly pear, sage, etc | Climate Aridic

Parent material Alluvium from sandstone and shale Mesic

Physiography Alluvial fan, valley (Clarks Valley)

Relief Gentle	Drainage Well drained	Salt or alkali
Elevation About 5815'	Gr. water	Stoniness
Slope 3-5%	Moisture Dry Throughout	
Aspect South	Root distrib.	% Clay *
Erosion Moderate	% Coarse fragments *	% Coarser than V.F.S. *

Permeability Moderate

Additional notes

Samples: SB3 0-6, 6-18, 18-38, 38-45 gravelly, 45-72

Less carbonate patches than in SB1 and SB2

* Control section average

Horizon	Depth inches	Color Dry	Color Moist	Texture	Structure	Consistence Dry	Consistence Moist	Consistence Wet	Reaction Lab pH	Boundary	% Rock Fragments	Root Distribution	Carbonates	
A	0-6	2.5Y 6/3	2.5Y 4/3	LOAM	WFPL 4/w 3" WFGR	SO	FR	SS/SP	es 7.8	CW	<5% gr	Common fine-v. fine		
BK1	6-18	"	2.5Y 5/3	LOAM	MASBK OM	SH-H	FI	S/P	es 7.9	gw	"		Common pale spot	
BK2	18-38	2.5Y 6/3	2.5Y 5/3-5/4	LOAM	"	VH	VFI	S/P	es 8.2	CS	"		Common 2.5Y 7/2	
BK3	38-45	gravelly	layer	SANDY LOAM	SG	L	FR	SO/PO	es 7.8	CS	60% Gr	Few F	Des.	
BK4	45-74	2.5Y 5/3-6/3	2.5Y 4/3	LOAM	MMSBK OM	H	VFI	S/P	es 7.6		<5% gr		Few mostly without light spots	
												*Not as white as some pedons		

SCS-SOILS-232G

U.S. DEPARTMENT OF AGRICULTUR
SOIL CONSERVATION SERVICE

SOIL DESCRIPTION

Soil type

File No. SB4

Area: Dugout Canyon Mine Soil Borrow Site | Date: 9/5/05 | By: D. Larsen | Stop No.

Classification

Location: NW Corner of The Site

N. veg. (or crop): Saltbush, Indian rice grass, prickly pear, sage | Climate: Arid/Semi

Parent material: Alluvium from sandstone and shale

Physiography: Alluvial fan, valley

Relief: Gently sloping | Drainage: Well drained | Salt or alkali

Elevation: 5815' | Gr. water | Stoniness

Slope: 3-5% | Moisture: Dry

Aspect: South | Root distrib.: To about 50" No restrictions | % Clay *

Erosion: Moderate, surface | % Coarse fragments * | % Coarser than V.F.S. *

Permeability: Moderate

Additional notes: Many cicada casts; mostly at 20 to 30 inches

Samples SB4 0-5
5-18
18-31
31-44
44-64

* Control section average

Horizon	Depth inches	Color Dry	Color Moist	Texture	Structure	Consistence Dry	Consistence Moist	Consistence Wet	Reaction Lab.	Boundary	% Rock Fragments	Root Distribution	Carbonates	
A	0-5	2.5Y 6/3	2.5Y 5/3 - 4/3	* LOAM	WF platy + WFGR	SO	FR	SS/SP	es 7.8	CS	<5 Gr	many vf-m		
AB	5-18			LOAM	MM SBK	SH-H	FI	S/P	8.2	gw	5 Gr spot up to 20%	common f-m		
BK	18-31			LOAM	MM SBK	VH	VFI	S/P	8.4	cw	<5 Gr	few fine	Few light patches	
BKC1	31-44			Gr-SANDY LOAM	SG-OM	SH	FR	SO/PO	7.9	cw	50 GR <3/4"	very few	carbonates on gravel	
BKC2	44-64			LOAM	WM SBK-OM	VH	VFI	S/P	7.7	gw	<5 GR	last 6" 50"	Few	
C	64-76	2.5Y 5/3 - 6/3	2.5Y 4/3	LOAM	(massive) OM	H	VFI	S/P			<5 GR			

* Field Texture is more like silt loam

SCS-SOILS-232G

U.S. DEPARTMENT OF AGRICULTURE
SOIL CONSERVATION SERVICE

SOIL DESCRIPTION

Soil type NRCS M.V. 91 Ravola

File No. SB5

Area Dugout Canyon Mine Soil Borrow Site Carbon Co. UT | Date 10/5/05 | By: D. Larsen | Stop No.

Classification

Location North central portion of site — S17, T14S, R12E

N. veg. (or crop) Shadescale, Indian ricegrass etc. | Climate

Parent material Alluvium from sandstone and shale

Physiography Alluvial fan; valley

Relief Gentle | Drainage well drained | Salt or alkali

Elevation ≈ 5815 FT | Gr. water | Stoniness

Slope 3-5% | Moisture

Aspect South | Root distrib. | % Clay *

Erosion Moderate | % Coarse fragments * | % Coarser than V.F.S. *

Permeability Moderate

Additional notes

Samples: SB5 0-12" (mixed A-horizons)
12-30"
30-56"
56-68"

@ 5:50PM - Low light for colors

* Control section average

Horizon	Depth inches	Color Dry	Color Moist	Texture	Structure	Consistence Dry	Consistence Moist	Consistence Wet	10% HCl Reaction Lab pH	Boundary	% Rock Fragments	Root Distribution	Carbonates	
A1	0-3	2.5Y 6/3	2.5Y 5/3	LOAM	WPGR-WFPL	SO	FR	S/P	es 7.9	CW	5GR	Many VF-F		
A2	3-8	10YR 6/2	10YR 5/2-4/2	LOAM	MMPL → MMSBK	SH	FI	S/P	es 7.9	CW	5GR	Common VF-M		
A3	8-12	fine gravel and sandy layer 10YR 5/2	10YR 4/2	SANDY LOAM	WPGR-OSGR	SO-LO	FR	SS/SP	es 7.9	CW	40GR fine	Common VF-M		
BK1	12-30	10YR 6/2	10YR 4/3-5/3	LOAM	MM SBK	H	VFI	S/P	es 8.3	GW	25 GR	Common F	1/4 T. 1/2" Common Patches	
BK2	30-56	10YR 6/2 spots of 2.5Y 8/1	10YR 4/3	LOAM	SMSBK	VH	VFI	S/P	es 7.8	GW	"	V. Few F	Many at 36-54"	
BK3	56-68	less carbonates and not as hard		LOAM	WMSBK to OM			S/P	es 7.9	GW	"	"		
BC	68-78	10YR 5/4-6/4	10YR 4/4	LOAM	OM (Massive)	H	FI	S/P	es 7.8		"			

SCS-SOILS-232G

U.S. DEPARTMENT OF AGRICULTUR
SOIL CONSERVATION SERVICE

Canyon Fuel Co.,

SOIL DESCRIPTION

Soil type Carbon Co., UT File No. SB6

Area Dugout Canyon Mine Soil Borrow Site | Date 10/6/05 | By: D. Larsen | Stop No.

Classification

Location Northeast corner of site S17, T14S, R12E

N. veg. (or crop) Shadescale, Indian ricegrass, black sage | Climate Arid to Mesic

Parent material Alluvium from sandstone and shale

Physiography Alluvial fan, valley (Clark Valley)

Relief Gently sloping	Drainage	Salt or alkali
Elevation About 5820'	Gr. water	Stoniness
Slope 3-5%	Moisture	
Aspect South	Root distrib.	% Clay *
Erosion Moderate	% Coarse fragments *	% Coarser than V.F.S. *

Permeability Moderate

Additional notes

Samples: SB6 0-8"
8-17
17-29
29-48
48-68

High proportion of very fine sand in the sand component

* Control section average

Horizon	Depth Inches	Color Dry	Color Moist	Texture	Structure	Consistence Dry	Consistence Moist	Consistence Wet	Reaction	Boundary	% Rock Fragments	Root Distribution	Carbonates White	Notes
A1	0-4	2.5Y 5/2-6/3	2.5Y 4/3	LOAM	MFGR MFPL	SO	FR	SS/SP	es 8.0	CS	<5GR	Many fine		
A2	4-8		10YR 5/2-4/3	LOAM	MMPL	SH	FI-FR	S/P	8.0	CW	"	Common f-m		
BK1	8-17		10YR 5/3-4/3	SANDY LOAM	WMSBK	H	FI	SS/SP	8.3	GW	"	Com. f-m	Few	Many pores
BK2	17-29		2.5Y 5/3 10YR 5/4	LOAM	M-S MSBK	VH	VFI	S/P	7.9	CW-GW	"	Few	Common	
BK3	29-48		10YR 4/4-5/4	LOAM	SMSBK	VH	VFI	S/P	7.9	GW	"		Many	
BKC	48-80		10YR 5/4	LOAM	WMSBK OM	H	FI	S/P	7.9		"		Few to Com.	

SCS-SOILS-232G

U.S. DEPARTMENT OF AGRICULTURE
SOIL CONSERVATION SERVICE

SOIL DESCRIPTION

Soil type Parola | File No. SB7

Area Dugout Canyon Mine Soil/Borrow Site Carbon Co, UT | Date 10/6/05 | By: D. Larsen | Stop No.

Classification

Location NE Center portion of site S12, R14S, T12E

N. veg. (or crop) Shadscale, Indian ricegrass | Climate Arid/Semi Mesic

Parent material Alluvium from sandstone and shale

Physiography Alluvial fan, valley (Clark Valley)

Relief Gentle slope | Drainage Well drained | Salt or alkali

Elevation ≈ 5810 | Gr. water | Stoniness

Slope 3-5 | Moisture

Aspect South | Root distrib. | % Clay *

Erosion Moderate | % Coarse fragments * | % Coarser than V.F.S. *

Permeability Moderate

Additional notes

Samples: SB7 0-3"
3-8"
8-23
23-50
50-72

Fair for Topsoil to 23".

* Control section average

Horizon	Depth inches	Color Dry	Color Moist	Texture	Structure	Consistence Dry	Consistence Moist	Consistence Wet	Reaction Lab. pH	Boundary	% Rock Fragments	Root Distribution	Carbonates	
A1	0-3	2.5Y 6/2 - 6/3	2.5Y 5/3 - 10YR 4/3	LOAM	WFGR	SO	FR	SS/SP	all es 7.9	CS	<5 GR	Common VF-F		
AB	3-8	2.5Y 6/3	2.5Y 4/3 - 10YR 4/3	LOAM	WMPL	SH	FR	S/P	8.0	CW	"	Common VF-M		
BK1	8-23	2.5Y 6/2 - 6/3	2.5Y 5/3 - 4/2	LOAM	OM	H	FI	S/P	8.2	CW	"	Few To Common F-M	Few white patches	
BK2	23-56		10YR 4/4 - 2.5Y 4/3	(GRSL) SANDY LOAM	SG Banded	H	FI	SS/SP	8.0	CW	50 GR <2"	Few Fine	Common	
BK3	50-72		2.5Y 4/2 - 4/3	LOAM	OM → MASBK	H	VFI	S/P	7.8	CW	5 GR	V. F	Common	
BC	72-78		2.5Y 4/3	(GRL) LOAM	OM	H	FI	SS/SP S/P	7.8		40 GR		Few	

SCS-SOILS-232G

U.S. DEPARTMENT OF AGRICULTURE
SOIL CONSERVATION SERVICE

SOIL DESCRIPTION

Soil type

File No. SB8

Area Dugout Canyon Mine Soil Borrow Site, Carbon Co., UT | Date 10/6/05 | By: D. Larsen | Stop No.

Classification

Location East side S17, T14S, R12E

N. veg. (or crop) Shadscale Indian rice grass etc. | Climate Arid Mesic

Parent material Alluvium from sandstone and shale

Physiography. Alluvial fan, valley

Relief Gentle slope | Drainage Well drained | Salt or alkali

Elevation 5800 feet | Gr. water | Stoniness

Slope About 3% | Moisture

Aspect South | Root distrib. | % Clay* ≈ 24%

Erosion Moderate - gullies near | % Coarse fragments* mostly < 5% | % Coarser than V.F.S.*

Permeability Moderate 8" layer of v. gravelly soil

Additional notes

Samples: SB8 0-8"
8-16"
16-39"
39-47 (gravelly)
47-72

* Control section average

Horizon	Depth inches	Color Dry	Color Moist	Texture	Structure	Consistence Dry	Consistence Moist	Consistence Wet	Reaction (10% HCl) Lab. pH	Boundary	% Rock Fragments	Root Distribution	Carbonates	
A1	0-4	2.5Y 6/2	2.5Y 5/3	20% c LOAM	WFGA + WFPL	SO	FR	S/P	es 7.8	CW	<5GR	common Primary VFrm		
A2	4-8	2.5Y 6/3	2.5Y 5/3	LOAM	MMPL	SH	SFI		7.8	CW	"	"		
AB	8-16	"	"	LOAM	WMSBK	H	FI		8.0	GW	"	Common Frm	Few faint patches	
BK1	16-20	"	"	24% c LOAM	MMSBK	VH	VFI		7.8	GW	"	Few	Few to common	
BK2	20-39		2.5Y 4/3 - 5/3	LOAM	MMSBK	VH	VFI		7.8	AS	"		Common patches + streaks	
BK3	39-47	gravelly layer		VGR SANDY LOAM	OM-SGR	SH-L	FR-FI	SS/SP	7.7	AD Disc.	50GR	V. Few	"	
BK4-Bt	47-73		2.5Y 4/3 - 5/3	26% c * LOAM	MCABK	VH	VFI		7.6		5GR		Common distinct secondary patches	
C	73-83		slightly browner 10YR 4/4	LOAM	OM → WMSBK	H	FR				<5GR			

SCS-SOILS-232G

U.S. DEPARTMENT OF AGRICULTURE
SOIL CONSERVATION SERVICE

SOIL DESCRIPTION

Soil type

File No. SB9

Area Dugout Canyon Mine Soil/Borrow Site Carbon Co., UT | Date 10/6/05 | By: D. Larsen | Stop No.

Classification

Location East edge near center of site S17, T14S, R12E

N. veg. (or crop) Shadscale, Indian ricegrass, blacksage | Climate Aridic Mesic

Parent material Alluvium from sandstone and shale

Physiography Alluvial fan, valley (Clark Valley - NW corner)

Relief Gentle | Drainage Well drained | Salt or alkali

Elevation About 5800 ft. | Gr. water | Stoniness

Slope 3% - 5% | Moisture Mostly dry - slightly moist at 36-50"

Aspect South | Root distrib. Mostly upper 36" High carb. | % Clay *

Erosion Moderate (gullies nearby) | % Coarse fragments * | % Coarser than V.F.S. *

Permeability Moderate

Additional notes

Samples: SB9 0-7"
7-20"
20-36"
36-84"

Many cicada casts at 15 to 30"

* Control section average

Horizon	Depth inches	Color Dry	Color Moist	Texture	Structure	Consistence Dry	Consistence Moist	Consistence Wet	Reaction	Boundary	% Rock Fragments	Root Distribution	Carbonates
A	0-7	2.5Y 5/2	2.5Y 4/2	26%c LOAM	WFGR + WMPL	SO-SH	FR	S/P	es 7.9	CS	<5% GR	Common to Many VF-M	
AB	7-20	2.5Y 6/3 - 10YR 6/2	10YR 4/4 - 2.5Y 4/2	LOAM	MF-M SBK	H	FI	S/P	8.3	GS	"	Common F-M	
BK1	20-36	2.5Y 6/3	2.5Y 4/2	LOAM	MMSBK	VH	FI	S/P	8.3	GW	"	Few Fine	Few Faint patches
BK2	36-84	10YR 6/3	2.5Y 4/2 - 10YR 5/3	21%c LOAM	MMSBK OM	VH	FI	S/P	8.3		"	V. Few	Abundant prominent white patches and streaks

60-70% si + vfs

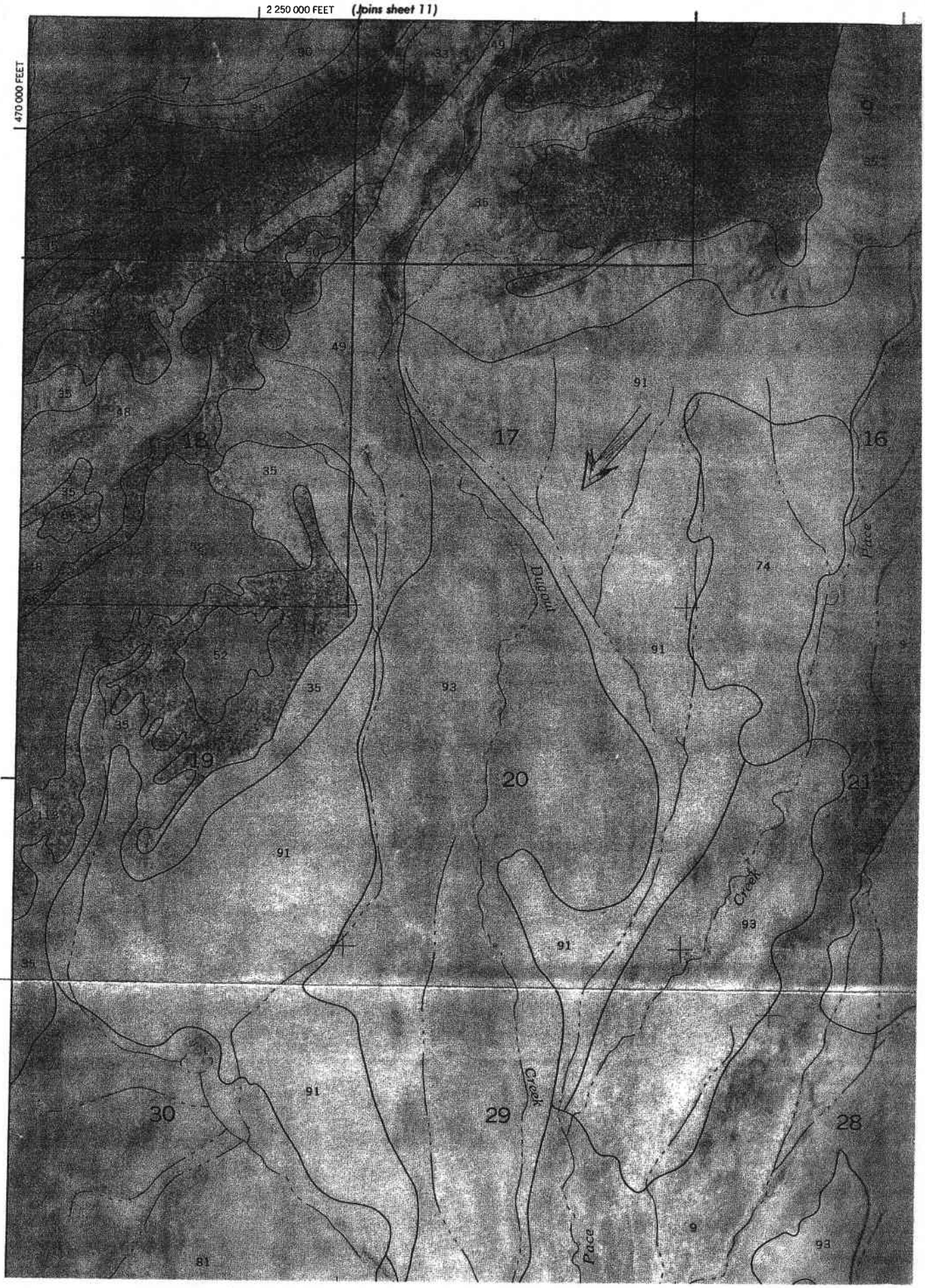

Carbon Area Soil Survey

Topsoil Borrow Area

The potential plant community on the Ravola soil is 50 percent grasses, 10 percent forbs, and 40 percent shrubs. Among the important plants are galleta, Indian ricegrass, shadscale, and winterfat.

Management practices that maintain or improve the rangeland vegetation include proper grazing use, a planned grazing system, and proper location of water developments. Severe drought may adversely affect the production of the perennial vegetation. Partial or total removal of livestock from the range may be necessary.

It is not practical to revegetate large areas of this unit because of the low annual precipitation. For critical erosion control, small areas can be mechanically treated and seeded. Native plants are suitable for critical area seedings.

If areas of this unit are irrigated, suitable management practices used to maintain or improve the area include conservation cropping systems with rotations of alfalfa hay, small grain, and corn. To maintain production, crop residue should be incorporated into the soil and fertilizer should be applied.

Irrigation water can be applied by the sprinkler or flood method. Fields can be leveled.

This map unit is in capability unit IIe-2, irrigated, and in capability subclass VIIe, nonirrigated. It is in the Desert Loam range site.

91—Ravola loam, 1 to 6 percent slopes, eroded. This very deep, well drained soil is on alluvial fans and narrow valley floors. It extends from Helper to Wellington and south to the Carbon-Emery county line. It formed in alluvium derived dominantly from sandstone and shale. Slopes are dominantly 3 to 6 percent, 100 to 300 feet long, and concave to convex. The vegetation in areas not cultivated is mainly galleta, shadscale, and some greasewood. Elevation is 5,300 to 6,000 feet. The average annual precipitation is 6 to 8 inches, the average annual air temperature is 48 to 50 degrees F, and the average freeze-free period is 115 to 140 days.

Typically, the surface layer is light brownish gray loam about 2 inches thick. The next layer is light brownish gray loam about 21 inches thick. Below this to a depth of 60 inches or more is light brownish gray silt loam.

Included in this unit are about 5 percent Billings silty clay loam, 5 percent Killpack clay loam, and small areas of Persayo loam. Also included are small areas of Ravola loam, 1 to 3 percent slopes.

Permeability of this Ravola soil is moderate. Available water capacity is about 7.5 to 10.5 inches. The water supplying capacity is 4 to 5 inches in areas not irrigated. Effective rooting depth is 60 inches or more. The organic matter content of the surface layer is 1 to 3 percent. Runoff is medium, and the hazard of water erosion is moderate. Runoff from adjacent areas has formed gullies in some areas of this soil. The gullies are *V*-shaped, are 4 to 8 feet deep, and in some areas are 100 to 400 feet apart. The hazard of soil blowing is moderate.

This unit is used mainly as rangeland and wildlife habitat. It is also used for irrigated crops and for homesite and urban development.

The potential plant community on the Ravola soil is 50 percent grasses, 10 percent forbs, and 40 percent shrubs. Among the important plants are galleta, Indian ricegrass, shadscale, and winterfat.

Management practices that maintain or improve the rangeland vegetation include proper grazing use, a planned grazing system, and proper location of water developments. Severe drought may adversely affect the production of the perennial vegetation. Partial or total removal of livestock from the range may be necessary.

It is not practical to revegetate large areas of this unit because of the low annual precipitation. For critical erosion control, small areas can be mechanically treated and seeded. Plants that may be suitable for critical area seedings are adapted native plants.

If areas of this unit are irrigated, suitable management practices include conservation cropping systems with rotations of hay or pasture and small grain. Crop residue should be kept on the surface of the soil. Pasture management that incorporates use of a rotation grazing system is best.

Sprinkler irrigation systems provide the best erosion control and the ability to apply irrigation water evenly to the fields. Flood irrigation can also be used if erosion is controlled.

This map unit is in capability unit IIIe-2, irrigated, and in capability subclass VIIe, nonirrigated. It is in the Desert Loam range site.

92—Ravola-Gullied land complex. This map unit is on alluvial fans and dissected narrow valley floors. It is widely distributed throughout the survey area. Some of the larger areas are along Drunkards Wash, Coal Creek, Miller Creek, Gordon Creek, and Soldier Creek. Slopes are 1 to 6 percent. Elevation is 5,300 to 6,000 feet. The average annual precipitation is 6 to 8 inches, the average annual air temperature is 48 to 50 degrees F, and the average freeze-free period is 115 to 140 days.

This unit is 70 percent Ravola loam, 1 to 6 percent slopes, eroded; 20 percent Gullied land; and 10 percent other soils. The Ravola soil is generally on valley floors, and the Gullied land is adjacent to the washes on the bottom of valleys. The components of this unit are so intricately intermingled that it was not practical to map them separately at the scale used.

Included in this unit is about 10 percent Green River silt loam on the bottom of washes. Also included are small areas of Killpack clay loam near the adjacent shale hills.

The Ravola soil is very deep and well drained. It formed in alluvium derived dominantly from shale and sandstone. Slopes are 50 to 150 feet long and are concave to convex. The present vegetation in most areas is mainly shadscale, halogeton, winterfat, yellow

LOCATION RAVOLA UT+NM CO

Established Series
Rev. RLM/DKR/SSP/WWJ
03/2005

RAVOLA SERIES

The Ravola series consists of very deep, well drained soils that formed in alluvium derived from shale, siltstone, and sandstone. Ravola soils are on alluvial fans and flood plains. Slopes range from 0 to 10 percent. Mean annual precipitation is about 7 inches and the mean annual temperature is about 50 degrees F.

TAXONOMIC CLASS: Fine-silty, mixed, active, calcareous, mesic Typic Torrifluvents

TYPICAL PEDON: Ravola loam under cultivation. (Colors are for dry soil unless otherwise noted.)

Ap1--0 to 6 inches; light brownish gray (2.5Y 6/2) loam, dark grayish brown (2.5Y 4/2) moist; weak coarse subangular blocky structure parting to weak fine subangular blocky; slightly hard, friable, slightly plastic; many fine roots, few coarse roots; common fine and medium pores; strongly effervescent; slightly alkaline (pH 7.8); clear smooth boundary. (2 to 6 inches thick)

Ap2--6 to 9 inches; light brownish gray (2.5Y 6/2) loam, dark grayish brown (2.5Y 4/2) moist; strongly compacted plowpan layer; weak coarse subangular blocky structure parting to weak coarse granular; hard, friable, slightly sticky and slightly plastic; many fine roots; common fine pores; few medium pores; strongly effervescent; slightly alkaline (pH 7.7); clear smooth boundary. (0 to 3 inches thick).

C1--9 to 18 inches; light brownish gray (2.5Y 6/2) loam, dark grayish brown (2.5Y 4/2) moist; weak thin platy structure parting to weak very thin platy; hard, friable, slightly sticky and slightly plastic; few coarse and many fine roots; many medium and common fine pores, strongly effervescent; slightly alkaline (pH 7.7); gradual wavy boundary. (9 to 24 inches thick)

C2--18 to 45 inches; light brownish gray (2.5Y 6/2) loam, dark grayish brown (2.5Y 4/2) moist; weak coarse subangular blocky structure parting to weak medium granular; slightly hard, friable, slightly sticky and slightly plastic; few medium and many fine roots; common medium pores; strongly effervescent; moderately alkaline (pH 7.9); gradual irregular boundary. (6 to 30 inches thick)

C3--45 to 60 inches; light brownish gray (2.5Y 6/2) loam, dark grayish brown (2.5Y 4/2) moist; massive; soft, very friable; few fine roots; few fine pores; strongly effervescent; moderately alkaline (pH 7.9).

TYPE LOCATION: Emery County, Utah; about 1 1/2 miles south and 1/2 mile east of Huntington; located about 2,000 feet west and 600 feet north of the southeast corner of sec. 31, T. 17 S., R. 9 E.

RANGE IN CHARACTERISTICS:
Mean annual soil temperature: 49 to 56 degrees F
Particle-size control section: 18 to 27 percent clay and less than 15 percent sand coarser than very fine sand

A horizon:
Hue: 10YR to 5Y
Value: 5 to 7 dry, 4 or 5 moist
Chroma: 2 or 4 dry or moist
Texture: loam, clay loam, very fine sandy loam, or silt loam
Calcium carbonate equivalent: 5 to 25 percent
Reaction: slightly to strongly alkaline

C horizon:
Hue: 10YR to 5Y
Value: 5 to 7 dry, 4 or 5 moist
Chroma: 2 to 4 dry or moist
Texture: stratified loamy sand to clay loam
Calcium carbonate equivalent: 5 to 25 percent
Reaction: slightly to strongly alkaline

COMPETING SERIES: This is the Billings series. Billings soils have particle-size control sections with 27 to 35 percent clay, and gypsum nodules below the series control section.

GEOGRAPHIC SETTING:
Parent material: alluvium derived from shale, siltstone, and sandstone
Landform: alluvial fans and flood plains
Slopes: 0 to 10 percent
Elevation: 4,500 to 6,000 feet
Mean annual temperature: 47 to 56 degrees F
Mean annual precipitation: 5 to 11 inches
Frost-free period: 110 to 160 days

GEOGRAPHICALLY ASSOCIATED SOILS: These are the competing Billings soils and the Hunting, Killpack, Mayfield, Saltair, and Skumpah soils. Hunting soils have mottles and a water table at depths between 20 and 40 inches. Killpack soils have a paralithic contact between 20 and 40 inches. Mayfield soils have carbonatic mineralogy. Saltair soils contain calcic horizons. Skumpah soils have a natric horizon. are poorly drained

DRAINAGE AND PERMEABILITY: well drained, negligible to medium runoff, moderate or moderately slow permeability. These soils are subject to occasional brief flooding following high intensity summer thunderstorms.

USE AND VEGETATION: Irrigated areas are used for growing small grains, corn, sugar beets, alfalfa, and pasture. Potential vegetation is shadscale, greasewood, Indian ricegrass, and galleta.

DISTRIBUTION AND EXTENT: Eastern Utah, northwest New Mexico and western Colorado. LRR D, MLRA 28A, 34, 35, 37. This series is of large extent.

MLRA OFFICE RESPONSIBLE: Lakewood, Colorado

SERIES ESTABLISHED: Emery and Grand Counties, Utah. 1940. Green River Soil Conservation District.

REMARKS: Diagnostic horizons and features recognized in this pedon are:

Ochric epipedon: The zone from 0 to 9 inches. (Ap1 and Ap2)

Classified according to Soil Taxonomy Second Edition, 1999

ADDITIONAL DATA: Lab sampled by NSSL in New Mexico. Pedon number S86NM-045-014.

National Cooperative Soil Survey
U.S.A.

Hernandez Family

The Hernandez family consists of very deep, well drained, moderately permeable soils on fan terraces. These soils formed in alluvium derived from sandstone and shale. Slope is 1 to 8 percent. Elevation is 5,600 to 7,100 feet. Average annual precipitation is 10 to 14 inches, and average annual air temperature is 45 to 49 degrees F.

These soils are fine-loamy, mixed, superactive mesic ~~Ustollic~~ Ustic ~~Calciorthids~~. Haplocalcids.

Reference pedon of Hernandez family, 3 to 8 percent slopes, about 4.5 miles northwest of Sunnyside Junction, about 1,000 feet south and 800 feet east of the northwest corner of sec. 19, T. 14 S., R. 12 E.

A1—0 to 3 inches; brown (7.5YR 5/4) loam, dark brown (7.5YR 4/2) moist; weak fine granular structure; slightly hard, friable, slightly sticky and slightly plastic; few very fine, common fine, and few medium roots; many fine and few medium pores; moderately calcareous; disseminated calcium carbonate; moderately alkaline (pH 8.2); abrupt smooth boundary.

B2—3 to 14 inches; brown (7.5YR 5/4) loam, dark brown (7.5YR 4/2) moist; weak medium subangular blocky structure; slightly hard, friable, slightly sticky and slightly plastic; few very fine, fine, and medium roots; common fine and few medium pores; moderately calcareous; disseminated calcium carbonate; moderately alkaline (pH 8.4); clear smooth boundary.

C1ca—14 to 39 inches; light brown (7.5YR 6/4) loam, brown (7.5YR 5/4) moist; moderate medium subangular blocky structure; hard, firm, slightly sticky and plastic; few very fine and fine roots; common fine and few medium pores; strongly calcareous; thin coatings of calcium carbonate on faces of peds; strongly alkaline (pH 8.8); gradual wavy boundary.

C2ca—39 to 60 inches; pink (7.5YR 7/4) loam, brown (7.5YR 5/4) moist; massive; hard, firm, slightly sticky and plastic; few very fine and fine roots; common fine and few medium pores; strongly calcareous; thin coatings of calcium carbonate on faces of peds; strongly alkaline (pH 9.0).

Secondary calcium carbonate is at a depth of 9 to 17 inches.

A horizon: Hue is 7.5YR or 10YR, value is 5 or 6 when dry, and chroma is 2 to 4. Texture is loam or very fine sandy loam.

B horizon: Hue is 7.5YR or 10YR, value is 5 or 6 when dry and 4 or 5 when moist, and chroma is 2 to 4.

Cca horizon: Hue is 7.5YR or 10YR, value is 6 to 8 when dry and 5 to 7 when moist, and chroma is 3 or 4. Calcium carbonate equivalent is 15 to 35 percent.

APPENDIX E

Photographs of Site and Soil Profiles
Soil Pit Locations

Refuse Pile soil borrow area, Dugout Canyon Mine, October 2005

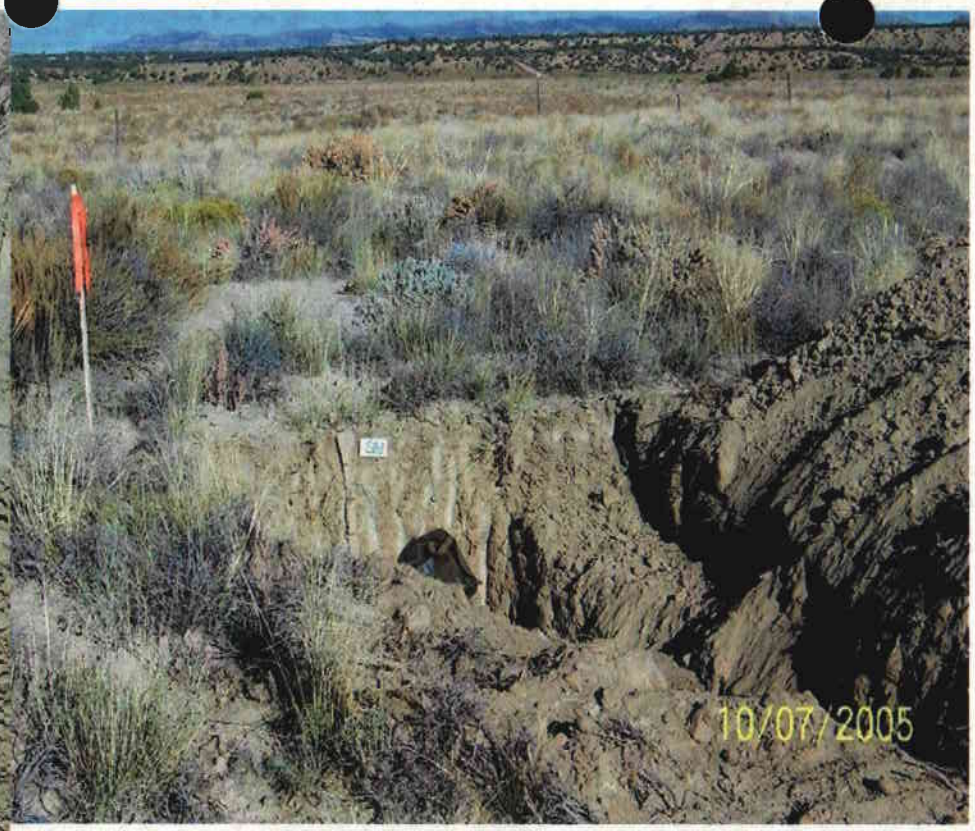

Soil Borrow Area – Sample Pit SB 1

Soil Borrow Area – Sample Pit SB 2

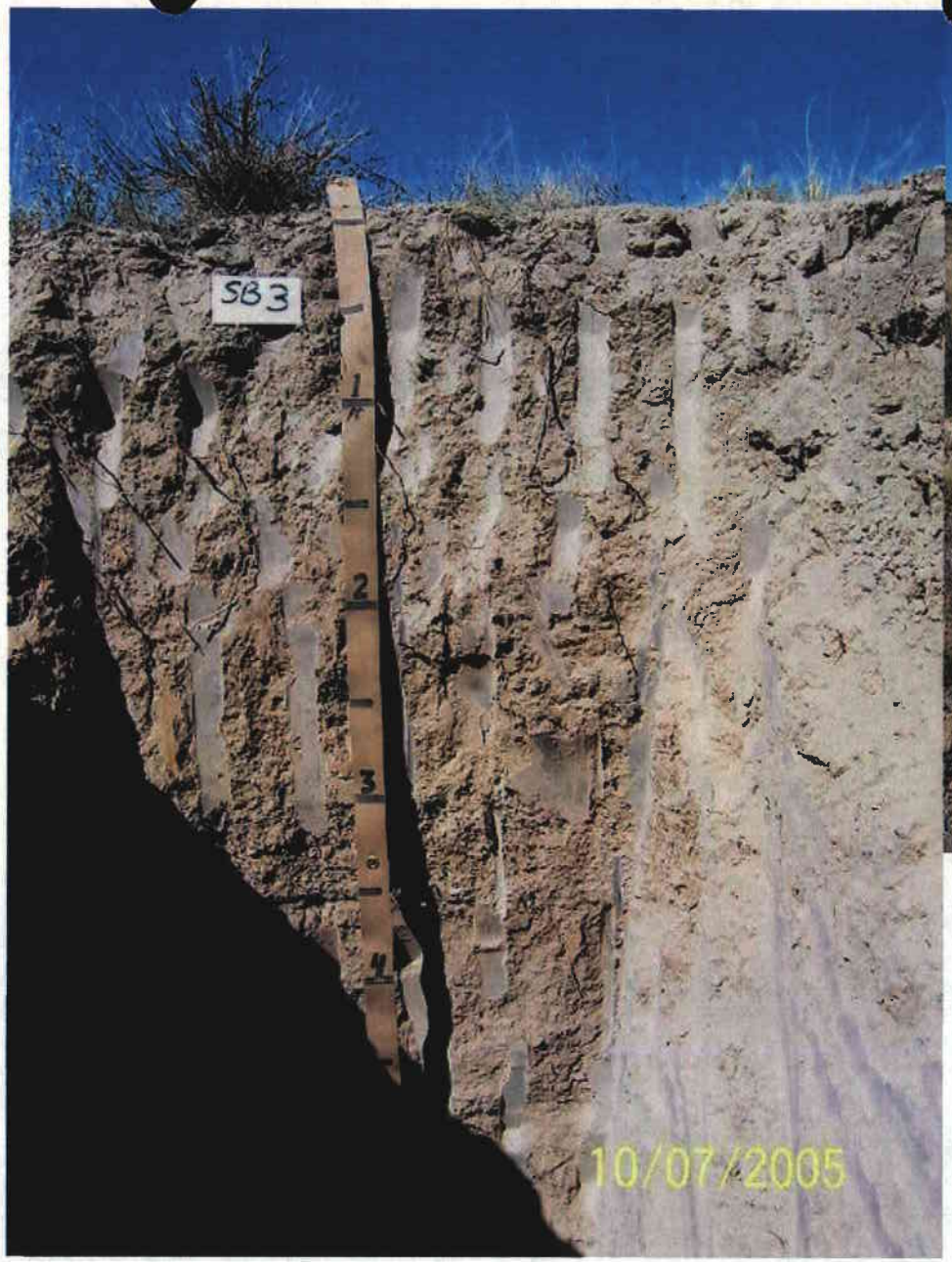

Soil Borrow Area – Sample Pit SB 3

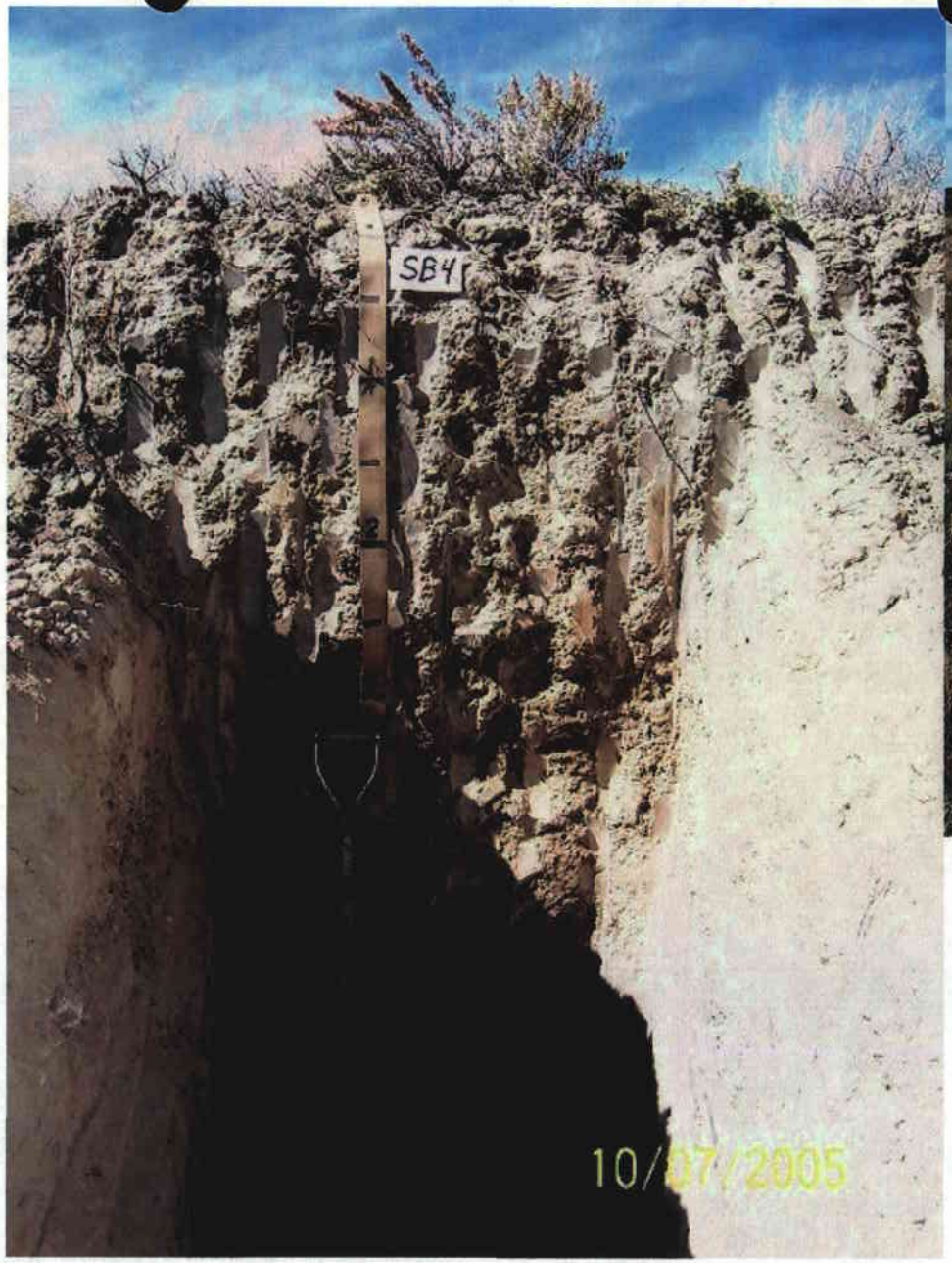

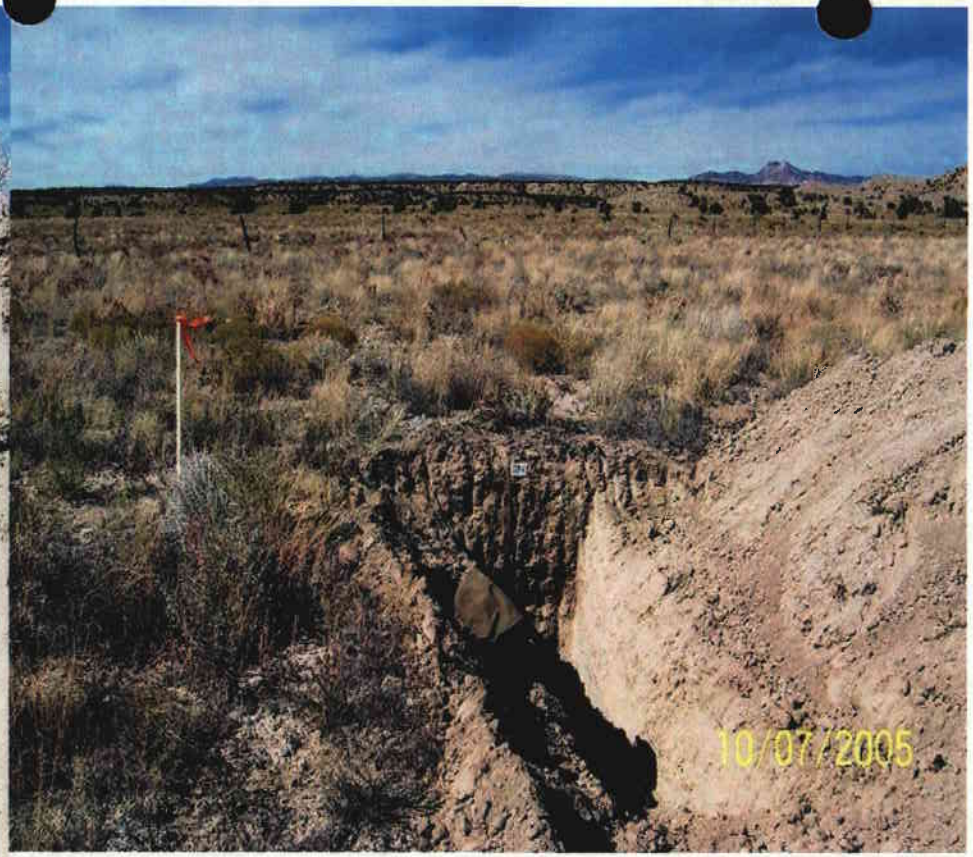

Soil Borrow Area – Sample Pit SB 4

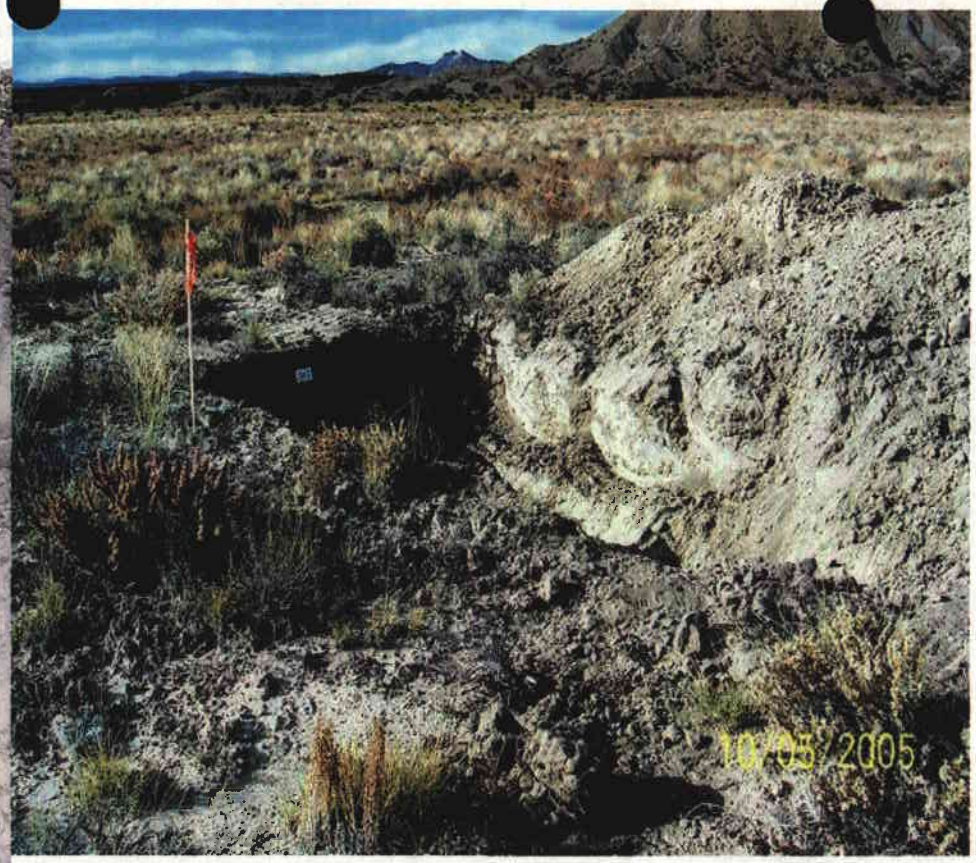

Soil Borrow Area – Sample Pit SB 5

Soil Borrow Area – Sample Pit SB 6

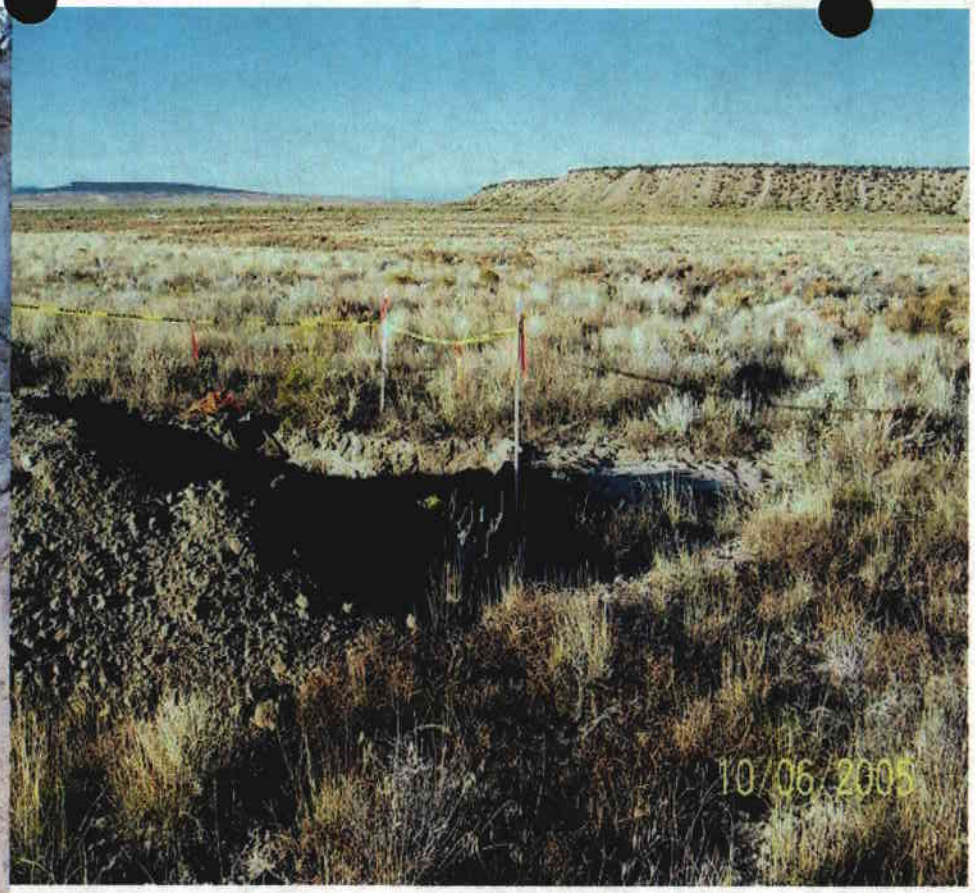

Soil Borrow Area – Sample Pit SB 7

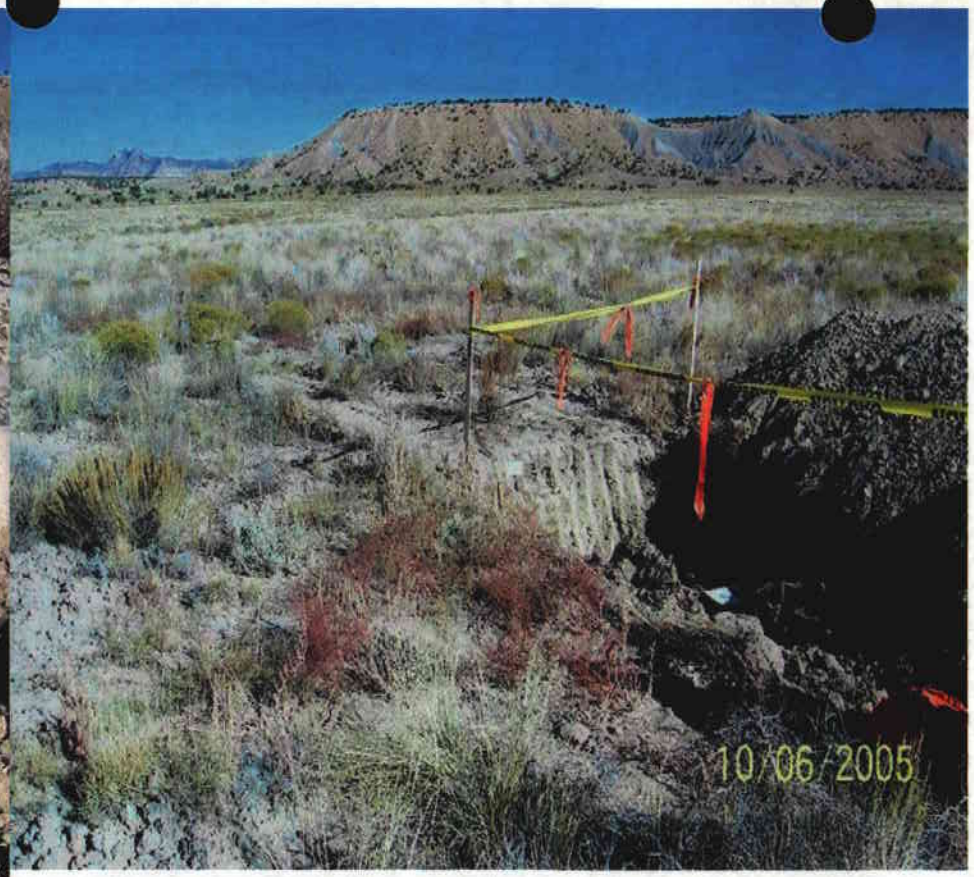

Soil Borrow Area – Sample Pit SB 8

Soil Borrow Area – Sample Pit SB 9

CHAPTER 3

BIOLOGY

340 RECLAMATION PLAN

See the approved M&RP reclamation plan for additional discussion as specified in this amendment.

341 Revegetation

The short-term goal of this revegetation plan is the immediate stabilization of the disturbed sites through erosion control. This objective will be achieved through controlled grading practices, proper seedbed preparation to encourage rapid plant establishment, inclusion of rapidly establishing species in the seed mixture to be planted, and mulch application.

The long-term goals are to establish useful, productive range and wildlife habitat. These goals will be attained through the selection and placement of desirable and productive plant species, and a commitment to monitor and maintain revegetated areas throughout the bond liability period.

341.100 Schedule and Timetable

The reclamation timetable and monitoring schedule are outlined in the approved M&RP. The monitoring outlined for the treatment areas is in Section 242.100.

341.200 Descriptions

Species and Amounts of Seed. The areas disturbed at the refuse pile site will be planted with one of the seed mixes listed below:

Interim Seed Mix (Broadcast Quantities)

SPECIES	# pls/acre	# pls/ft^2
Indian ricegrass	3	11.16
Blue grama	2	33.24
Sheep fescue	2	24.33
Western wheatgrass	4	10.46
TOTAL	11	79.19

The interim seed mix will be used on the substitute topsoil and subsoil stockpiles and any other areas requiring stabilization prior to final reclamation.

Final Reclamation Seed Mix (Broadcast Quantities)

SPECIES	# pls/acre	# pls/ft^2
Grasses, Forbs, and Shrubs		
Galleta grass	4.0	13.77
Indian ricegrass	3.0	11.16
Bottlebrush squirreltail	1.0	4.40
Blue grama	1.0	16.62
Sheep fescue	1.5	12.17
Palmer penstemon	1.0	14.00
Scarlet Globemallow	0.5	5.74
Black sagebrush	1.0	22.26
Wyoming big sagebrush	0.3	17.21
Shadscale	1.0	1.49
TOTAL	14.3	119

Bareroot Seedlings (200 each per acre)	
Shadscale*	
Black Sagebrush*	
TOTAL	400 per acre

* If available, otherwise substitutions or deletions will be made at the time of reclamation as determined jointly by UDOGM and the permittee.

Pinyon/ Juniper seed/seedlings have not been included in the seed mix or planting plan, but will be allowed to invade the area naturally.

Borrow Area - the Final Reclamation Seed Mix listed above will be planted at the borrow area, with the following exclusions, Palmer Penstemon, Shadscale seeds and no bareroot seedlings.

Method Used for Planting and Seeding. The refuse pile site will be permanently reclaimed section-by-section. Refer to Chapter 5, Sections 536 and 540 for a discussion of the sequence of the construction and contemporaneous reclamation of the refuse pile.

The area will be graded to final contours, and then ripped to relieve compaction. Ripping will be completed to a maximum depth of approximately 2 feet. Final ripping depths will be determined by the materials being ripped, to prevent incorporation of less desirable soil/rock into more productive materials.

Following ripping, stockpiled soil will be applied to the ripped surface and left in a extreme roughened state(pocked and gouged). Prior to seeding, one ton per acre of certified noxious weed free hay will be incorporated into the surface soils to assist in the reduction of wind and water erosion and provide organic matter. Except as noted all areas will be seeded the same.

Soil samples will be collected and sent to the laboratory for analysis to determine if amendments are necessary. Soil nutrients are discussed further in Section 243. Nutrients will be applied in a single application. On slopes greater than 3:1, the rough, disturbed surface will be treated by traversing a dozer perpendicular to the slope contour to incorporate the nutrients.

All seeds will be broadcast and/or incorporated with a small amount of mulch and applied by hydroseeding equipment. Hydroseeding will be accomplished in two applications, the first being the application of the seed to the soil and the second an application of mulch and tackifier on top of the seed.

Since warm season grasses and cool season grasses are both being planted during the reclamation of the refuse pile area, seeding for final reclamation will be split, warm season grasses will be applied with hydroseeding equipment as described above. Cool season grasses will be broadcast in the late Fall without mulch or tackifier (Personal communication Jerriann Ernstsen, UDOGM, December 20, 2002). Refer to Section 354 for the timing for the seeding.

Mulching Techniques. Following warm season seeding, the seeded areas will be mulched with an organic mulching material. Organic mulch will be applied at the rate of 2000 pounds per acre and anchored with a tackifier.

Irrigation, Pest and Disease Control. No irrigation is planned and pesticides will not be used unless previously approved by the Division.

Measures Proposed for Revegetation Success. Refer to Section 356 and the approved M&RP.

341.300 Greenhouse Studies, Field Trials or Other Equivalent Studies

Refer to the approved M&RP. Refer to Section 242 for information pertaining to a study of contemporaneous reclamation treatments used to provide justification for the reduction of cover necessary to comply with regulation R645-301-553.252.

342 Fish and Wildlife

Refer to the approved M&RP. There are no water sources within the refuse pile permitted area to support fish.

342.100 Enhancement Measures

No enhancements are planned other than those described in the approved M&RP.

342.200 Plants Used for Wildlife Habitat

Refer to the approved M&RP.

Nutritional Value. The nutritional value will be consistent with that of vegetation in the surrounding areas.

Cover. The goal is to establish plant species, which will provide sufficient cover for the wildlife of the area. Refer to the approved M&RP. There are no water sources within the refuse pile permitted area to support fish.

Ability to Support and Enhance. Refer to the approved M&RP.

342.300 Cropland

Cropland is not a postmining land use.

342.400 Residential, Public Service and Industrial Land Use

No residential, industrial or public service use is planned at the present time.

350 PERFORMANCE STANDARDS

351 General Requirements

CFC commits to conduct all operations in accordance with the plans submitted in Sections R645-301-330 through R645-301-340 of the permit application.

352 Contemporaneous Reclamation

Reclamation activities prior to final reclamation will, to the extent feasible, be performed contemporaneously with refuse storage operations. Two general areas will be contemporaneously reclaimed. These are the soil stockpile and outslope of the refuse pile, once it reaches final configuration. The soil storage area will receive interim seeding following the completion of soil stockpiling. The pile outslope will be covered with soil and seeded with the final vegetation seed mix.

A portion of the refuse pile will receive contemporaneous reclamation, the purpose will be to provide justification for the reduction of cover necessary to comply with regulation R645-301-553.252.

353 Revegetation: General Requirements

A vegetative cover will be established on all reclaimed areas to allow for the designated postmining land use of wildlife habitat and livestock grazing. Refer to Section 411 and the approved M&RP for additional information.

353.100 Vegetative Cover

The seed mix proposed for revegetation is intended to provide vegetative cover that will be diverse, effective, and permanent. The seed mixture was selected with respect to the climate, potential

CHAPTER 5

ENGINEERING

TABLE OF CONTENTS

Section — Page

CHAPTER 5 5-1

510 INTRODUCTION 5-1

511 General Requirements 5-1
512 Certification 5-1
512.100 Cross Sections and Maps 5-1
512.200 Plans and Engineering Designs 5-2
513 Compliance with MSHA Regulations and MSHA Approvals 5-2
513.100 Coal Processing Waste Dams and Embankments 5-2
513.200 Impoundments and Sedimentation Ponds 5-3
513.300 Underground Development Waste, Coal Processing Waste, and Excess Spoil 5-3
513.400 Refuse Piles 5-3
513.500 Underground Openings to the Surface 5-3
513.600 Discharges to Underground Mines 5-3
513.700 Surface Coal Mining and Reclamation Activities 5-3
513.800 Coal Mine Waste Fires 5-4
514 Inspections 5-4
514.100 Excess Spoil 5-4
514.200 Refuse Piles 5-4
514.300 Impoundments 5-5
515 Reporting and Emergency Procedures 5-5
515.100 Slides 5-5
515.200 Impoundment Hazards 5-5
515.300 Temporary Cessation of Operations 5-6

520 OPERATION PLAN 5-7

521 General 5-7
521.100 Cross Sections and Maps 5-8
521.200 Signs and Markers 5-9
522 Coal Recovery 5-9
523 Mining Methods 5-9
524 Blasting and Explosives 5-9
525 Subsidence 5-9
526 Mine Facilities 5-9
526.100 Mine Structures and Facilities 5-9
526.200 Utility Installation and Support Facilities 5-9
527 Transportation Facilities 5-9

TABLE OF CONTENTS (Continued)

Section — Page

527.100 Road Classification 5-9
527.200 Description of Transportation Facilities 5-10
528 Handling and Disposal of Coal, Excess Spoil, and Coal Mine Waste 5-11
529 Management of Mine Openings 5-11

530 OPERATIONAL DESIGN CRITERIA AND PLANS 5-11

531 General 5-11
532 Sediment Control 5-11
533 Impoundments 5-12
533.100 Slope Stability 5-12
533.200 Foundation Considerations 5-12
533.300 Slope Protection 5-12
533.400 Embankment Faces 5-12
533.500 Highwalls 5-12
533.600 MSHA Criteria 5-13
533.700 Pond Operation and Maintenance Plans 5-13
534 Roads 5-14
534.100 Location, Design, Construction, Reconstruction, Use, Maintenance, and Reclamation 5-14
534.200 Environmental Protection and Safety 5-14
534.300 Primary Roads 5-14
535 Spoil 5-15
536 Coal Mine Waste 5-15
536.100 Design 5-15
536.200 Waste Emplacement 5-16
537 Regraded Slopes 5-18
537.100 Division Approval 5-18
537.200 Regrading of Settled and Revegetated Fills 5-19

540 RECLAMATION PLAN 5-19

541 General 5-19
541.100 Commitment 5-19
541.200 Surface Coal Mining and Reclamation Activities 5-19
541.300 Underground Coal Mining and Reclamation Activities 5-19
541.400 Environmental Protection Performance Standards Performance Standards 5-19

TABLE OF CONTENTS (Continued)

Section — Page

542 Narratives, Maps, and Plans 5-20
542.100 Reclamation Timetable 5-20
542.200 Plan for Backfilling, Soil Stabilization, Compacting, and Grading 5-20
542.300 Final Surface Configuration Maps and Cross Sections 5-21
542.400 Removal of Temporary Structures 5-21
542.500 Removal of Sedimentation Pond 5-22
542.600 Roads 5-22
542.700 Final Abandonment of Mine Openings and Disposal Areas . 5-22
542.800 Estimated Cost of Reclamation 5-22

550 RECLAMATION DESIGN CRITERIA AND PLANS 5-22

551 Casing and Sealing of Underground Openings 5-22
552 Permanent Features 5-22
552.100 Small Depressions 5-22
552.200 Permanent Impoundments 5-23
553 Backfilling and Grading 5-23
553.100 Disturbed Area Backfilling and Grading 5-23
553.200 Spoil and Waste 5-24
553.250 Refuse Piles 5-24
553.300 Exposed Coal Seams, Acid- and Toxic-Forming Materials, and Combustible Materials 5-24
553.400 Cut-and-Fill Terraces 5-24
553.500 Highwalls From Previously Mined Areas 5-24
553.600 Previously Mined Areas 5-25
553.700 Backfilling and Grading - Thin Overburden 5-25
553.800 Backfilling and Grading - Thick Overburden 5-25
553.900 Regrading of Settled and Revegetated Fills 5-25

560 PERFORMANCE STANDARDS 5-25

LIST OF FIGURES

RA Figure 5-1 Reclamation Timetable 5-27
RA Figure 5-2 Typical Access Road Cross-Section 5-28
RA Figure 5-3 Typical Temporary Access Road Cross Sections 5-29

TABLE OF CONTENTS (Continued)

LIST OF PLATES

RA Plate 5-1 Storage Area Layout Operations Plan
RA Plate 5-1A Storage Area Operational Surface Cross Sections
RA Plate 5-2 Storage Area Reclamation Plan
RA Plate 5-2A Storage Area Reclamation Cross Sections
RA Plate 5-3 Storage Area Pre-mining Conditions

LIST OF ATTACHMENTS

RA Attachment 5-1 Sediment Pond Slope Stability Evaluation
RA Attachment 5-2 Refuse Pile Slope Stability Evaluation
RA Attachment 5-3 Refuse Pile Volume Calculations
RA Attachment 5-4 Waste Rock Analysis
RA Attachment 5-5 As-Built Topography Map
RA Attachment 5-6 Refuse Pile Access Road Drawings

CHAPTER 5

ENGINEERING

510 INTRODUCTION

This chapter provides a discussion of general engineering aspects, an operation plan, a reclamation plan, design criteria, and performance standards related to the refuse pile. The activities associated with the construction and reclamation of the refuse pile will be designed, located, constructed, maintained, and reclaimed in accordance with the operation and reclamation plans.

511 General Requirements

This permit application includes descriptions of the proposed refuse pile area construction, maintenance, and reclamation operations together with the appropriate maps, plans, and cross sections. Potential environmental impacts as well as methods and calculations utilized to achieve compliance with the design criteria are also presented.

512 Certification

Where required by the regulations, cross sections and maps in this permit application have been prepared by or under the direction of, and certified by, qualified registered professional engineers, geologist or land surveyors. As appropriate, these persons were assisted by experts in the fields of hydrology, geology, biology, etc.

512.100 Cross Sections and Maps

The configuration of the refuse pile and cross sections through the pile are provided on RA Plates 5-1 and 5-1A of this submittal. An as-built map of the refuse pile topography (Olympus Aerial Survey, May 2003) is included in Attachment 5-5.

512.200 Plans and Engineering Designs

All plans and engineering designs presented in this submittal were prepared by or under the direction of and certified by a qualified registered professional engineer.

Excess Spoil. No excess spoil will be generated from the refuse pile area.

Durable Rock Fills. No durable rock fills will exist in the refuse pile area.

Coal Mine Waste. If coal mine waste is generated by the Dugout Canyon Mine, it will be placed in the refuse pile site.

Impoundments. A sedimentation pond impoundment was built in the refuse pile area (see Section 732).

Primary Roads. The access road to the refuse pile and the temporary road to construct the refuse pile are classified as primary roads.

Variance From Approximate Original Contour. CFC does not request a variance from the approximate original contour requirements of the regulations for this site. The proposed configuration of the site will comply with the post-mining land use and blend into the surrounding area.

513 Compliance with MSHA Regulations and MSHA Approvals

513.100 Coal Processing Waste Dams and Embankments

No coal processing waste dams or embankments will exist within the permit area.

513.200 Impoundments and Sedimentation Ponds

No impoundments or sedimentation ponds in the permit area meet the size criteria of 30 CFR 77.216(a).

513.300 Underground Development Waste, Coal Processing Waste, and Excess Spoil

If underground development waste is generated by the Dugout Canyon Mine, it will be stored at the refuse pile site. Coal processing waste will be stored at the refuse pile site. No excess spoil will be generated or stored within this area.

513.400 Refuse Piles

Coal mine waste or underground development waste generated by the Dugout Canyon Mine, will be stored at the refuse pile site. The design of the pile will meet the requirements of MSHA, 30 CFR 77.124 and 30 CFR 77.215 in accordance with Section 536.900.

513.500 Underground Openings to the Surface

No underground openings will be present in this area.

513.600 Discharges to Underground Mines

No discharges to underground mines will occur in this area.

513.700 Surface Coal Mining and Reclamation Activities

No surface coal mining and reclamation activities will occur in this area.

513.800 Coal Mine Waste Fires

If any coal mine waste fires occur within the permit area, these will be reported immediately to MSHA and the Division. Immediate remedial action will be taken as deemed necessary by CFC to protect public health and safety as well as the environment. Following initial remedial efforts, a long-term plan will be formulated in discussion with MSHA and the Division to extinguish any existing fires and prevent future fires.

CFC will utilize a program of prevention and suppression to minimize the potential for coal mine waste fires. An ongoing educational program will emphasize the need for attention to fire prevention. Suppression will occur by separating smoldering material and compacting the adjacent material (to minimize oxygen content in the adjacent material). The burning material will then be extinguished using appropriate methods (see Section 528.300 of the approved M&RP and Section 536.200 of this amendment). No burning mine waste will be removed from the refuse pile area without a removal plan approved by the Division.

514 Inspections

514.100 Excess Spoil

Excess spoil will not be stored in this area.

514.200 Refuse Piles

Quarterly inspections will be made of the refuse pile area (see RA Plate 5-1). These inspections will be performed by a professional engineer or a specialist experienced in the construction of similar earth and waste structures. CFC will provide copies of the certified reports to the Division in the annual report. The report will discuss any appearances of instability, structural weakness, or other hazardous conditions. A copy of this report will be maintained at the mine site.

An MSHA permit was obtained before any refuse was placed in the pile area. All activities performed at this site will be in accordance with the applicable MSHA permit.

514.300 Impoundments

Regular inspections were made during construction of the sedimentation pond as well as upon completion of construction. These inspections were made by or under the direction of a registered professional engineer experienced in the construction of similar earth and water structures.

Quarterly inspections of the sedimentation pond will continue until removal of the structure or release of the performance bond. An annual certified report of inspection will be prepared by a qualified registered professional engineer and submitted to the Division in the annual report. The report will discuss any appearances of instability, structural weakness or other hazardous conditions, depth and elevation of any impounded waters, existing storage capacity, and existing or required monitoring procedures and instrumentation, and any other aspects of the structure affecting stability. A copy of this report will be maintained at the mine site.

No impoundments are anticipated within the permit area that are subject to 30 CFR 77.216.

515 Reporting and Emergency Procedures

515.100 Slides

If a slide occurs within the refuse pile area that may have a potential adverse effect on the public, property, health, safety, or the environment, CFC will notify the Division following discovery of the slide and will comply with any remedial measures required by the Division.

515.200 Impoundment Hazards

If any examination or inspection of an impoundment discloses that a potential hazard is associated

with that impoundment that may have an adverse effect on the public, property, health, safety, or the environment, the person who examined the impoundment will promptly inform the Division of the finding and of the emergency procedures formulated for public protection and remedial action. If adequate procedures cannot be formulated or implemented, the Division will be notified.

515.300 Temporary Cessation of Operations

Prior to a temporary cessation of operations within the permit area that will last for a period of 30 days or more or as soon as it is known that a temporary cessation will extend beyond 30 days, CFC will submit to the Division a notice of intention to cease or abandon operations. This notice will include the following:

A statement of the number of surface acres affected by mining operations in the permit area prior to cessation of operations,

A discussion of the extent and kind of reclamation activities which will have been accomplished prior to cessation of operations, and

An identification of the backfilling, regrading, revegetation, environmental monitoring, and water treatment activities that will continue during the temporary cessation.

During the temporary cessation, CFC will secure surface facilities in areas in which there are no current operations but where future operations are to be resumed under an approved permit.

520 OPERATION PLAN

521 General

521.100 Cross Sections and Maps

Existing Surface and Subsurface Facilities and Features. No buildings are located in and within 1000 feet of the refuse pile area. No surface or subsurface features are within, passing through or passing over the refuse pile area. An existing county road bypasses the area. The county road lies on land either owned by the State of Utah, the United States of America, or Canyon Fuel Company, LLC (see Plate 1-3 of the approved M&RP).

Landowner, Right-of-Entry, and Public Interest. CFC is the current land owner of the property where the refuse pile is built. It is located adjacent to the county road to Dugout Canyon. Public access will be limited to the site by construction of a suitable fence and gate. The contiguous surface owners are the United States of America and Canyon Fuel Company, LLC (See Figure RA 1-1B of this submittal). The contiguous subsurface owner is the United States of America (See Figure RA 1-1B of this submittal).

Mining Sequence and Planned . This does not apply to this site (see Section 525).

Land Surface Configuration. Surface contours of undisturbed areas within the storage area are provided on RA Plate 5-1 of this submittal. The initial segment of the refuse pile was constructed in a gravel pit. The first four (4) feet of refuse material was used to fill a pit and bring it to grade. The remainder of the refuse material will be placed above grade and reach a total pile height of sixty (60) feet above portions of the immediate surrounding area as provided on RA Plate 5-1 of this submittal. As shown on RA Plate 1-1, the hills surrounding the site range in elevation from 5887 to 6283, therefore the reclaimed elevation of the refuse pile of 5980 to 6000 will blend with the surrounding area.

Surface Facilities. The surface facilities associated with the refuse pile site include: the refuse pile, temporary material/snow storage areas, soil stockpiles, access road, sedimentation pond, and

drainage control structures. Facilities are shown or mentioned on RA Plate 5-1. Detailed information on sedimentation pond and drainage facilities is presented in Chapter 7 of this submittal. Cross sections of the refuse storage pile(s) are provided on RA Plate 5-1.

Transportation Facilities. A permanent road is not anticipated to be constructed, used, or maintained by CFC in the storage area. During construction of the pile, temporary access roads will be constructed and maintained. The temporary roads will be reclaimed and seeded with the permanent reclamation seed mix (Section 341.200 of this amendment). Refer to RA Attachment 5-6 for drawings of the paved access road.

521.200 Signs and Markers

Mine and Permit Identification Signs. A mine and permit identification sign will be displayed at the refuse pile site. This sign will be a design that can be easily seen and read, will be made of durable material, will conform to local regulations, and will be maintained until after the release of all bonds for the permit area. The sign will contain the following information:

Mine name,
Company name,
Company address and telephone number,
MSHA identification number, and
Permanent program permit identification number as obtained from the Division.

Perimeter Markers. The perimeter of all areas affected by surface operations were clearly marked before beginning mining activities. The markers will be a design that can be easily seen and will be made of durable material, will conform to local regulations, and will be maintained until after the release of all bonds for the permit area.

Buffer Zone Markers. Stream buffer zone markers are not required for this area.

Topsoil Markers. Markers will be placed on all soil stockpiles. These markers will be a design that can be easily seen and read, will be made of durable material, will conform to local regulations, and will be maintained until after the release of all bonds for the permit area.

522 Coal Recovery

No coal recovery will be performed at this site.

523 Mining Methods

No mining will be performed at this site.

524 Blasting and Explosives

No explosives are to be used at this site.

525 Subsidence

No subsidence will occur in this area, because no underground coal mining will occur beneath the refuse pile site. Therefore, there will be no effects on the site from coal mining related subsidence.

526 Mine Facilities

526.100 Mine Structures and Facilities

No buildings exist or are proposed at the refuse pile site; therefore, no existing buildings will be used in connection with or to facilitate this proposed coal mining and reclamation operation.

526.200 Utility Installation and Support Facilities

No utilities are to be installed at this site.

527 Transportation Facilities

527.100 Road Classification

No permanent roads are to be built in association with the construction of the refuse pile. A

temporary road will be used to access the site. The access road to the refuse pile and the temporary road to construct the refuse pile are classified as primary roads. Refer to Section 521.100 of this amendment for additional detail.

The existing road to access the site from the Dugout Canyon Road will be paved to provide all weather access to the site. The road will have a guard rail constructed to comply with engineering, UDOT and MSHA requirements. Refer to RA Attachment 5-6 for drawings of the road.

527.200 Description of Transportation Facilities

The access road to the refuse pile site follows the alignment of an existing road shown on RA Plate 7-1. The access road is approximately 840 feet long and will have paved surface approximately 20 feet wide. The access road will have a maximum grade of 16% and an average grade of 10%. The road will gently slope towards UD-1c which drains to culvert UC-1 (See cross-section RA Figure 5-1 2). The road does not cross any natural drainage. Culvert, UC-1, was installed at the intersection of the access road and the county road, to allow free flow of the runoff in the county road borrow ditch. Specific design information for the culvert is provided in RA Attachment 7-4.

The temporary access road is shown on RA Plate 5-1. The road is approximately 20 feet wide and is constructed on compacted subsoil. The road will have an uniform grade of 2% within the site (See cross-section RA Figure 5-2). The runoff from the road will flow into drainage ditches and then into the sediment pond.

During operations, the access road and temporary access road will be maintained using a road grader and any other equipment which may be necessary to ensure compliance. Drainage ditches will be maintained to ensure proper functioning.

Accidental spillage of coal mine waste during haulage from the mine site to the refuse pile will be minimized by not overloading the haulage trucks. Accidental spills, if they occur, will be cleaned up and transported to the refuse site, in a timely manner.

If a catastrophic events causes damage to access roads, the rapid repair of the road/roads will begin as soon as practical following the catastrophic damage.

528 Handling and Disposal of Coal, Excess Spoil, and Coal Mine Waste

Coal mine waste and/or underground development waste materials generated at the Dugout Mine, will be transported to the refuse site and disposed of in a controlled manner in accordance with Section 536. Construction of the refuse pile will meet MSHA and DOGM requirements in accordance with the approved plan.

Non-coal and hazardous wastes will not be disposed of in the refuse pile. They will be handled in accordance with the approved M&RP.

529 Management of Mine Openings

No mine openings will be built in the area.

530 OPERATIONAL DESIGN CRITERIA AND PLANS

531 General

This section contains the general plans for the construction of the sediment control measures and general construction and maintenance of the refuse pile area. This site will be used by CFC to handle coal mine waste or underground development waste that may be generated by the Dugout Mine. Also, a portion of the site will be used as a temporary storage yard for mine materials and a place for disposal of excess snow from the Dugout Mine site.

During operations, the runoff from the site area will be treated through the use of sediment controls such as diversion ditches and berms, a sediment pond, and silt fences and/or straw bales. These structures will be constructed, to handle the site runoff, before the initial refuse is placed.

532 Sediment Control

Sediment-control measures for the site area are described in detail in Sections 732 and 742 of this submittal. Runoff-control structures at the refuse pile area have been designed to convey runoff in a non-erosive manner. Sediment yields in the permit area are minimized by, disturbing the smallest

practicable area during the construction or modification of surface facilities and contemporaneously reclaiming areas suitable for such reclamation.

533 Impoundments

533.100 Slope Stability

The only impoundment with an embankment that will be constructed, used, or maintained by CFC will be the sedimentation pond at the refuse pile site. This pond is an incised pond with an embankment consisting of native materials. A slope-stability analysis was performed on this pond embankment material and is provided in RA Attachment 5-1. According to this analysis, the minimum safety factor for the sedimentation pond embankment is 1.9 under static moist conditions. Furthermore, the analysis presented in RA Attachment 5-1 indicates that a minimum safety factor of 2.2 will exist for the embankment under conditions of rapid drawdown. All analyses were performed assuming that the pond was full to its maximum design depth. These safety factors exceed the minimum requirements of R645-301-533.100.

533.200 Foundation Considerations

Soils investigations have been conducted at the site of the refuse pile area. Results of these investigations are presented in Chapter 2 and RA Attachment 5-1 of this submittal. During these investigations, foundation conditions in the area of the proposed sedimentation pond were evaluated. Based on these investigations, no conditions were encountered which suggested that the materials in which the pond would be constructed would be unstable. The slope-stability analyses presented in RA Attachment 5-1 indicate that the pond embankments will also be stable under operating conditions. Detailed cross sections of the sedimentation pond are presented on RA Plate 7-2 of this submittal.

533.300 Slope Protection

The inslopes of the sedimentation pond and portions of the outslope disturbed by the spillway construction were revegetated following construction to minimize surface erosion and protect the

embankments against sudden drawdown. The interim seed mix was used for this revegetation effort (see Section 341.200 of this submittal).

Rapid drawdown in the sedimentation pond would be restricted to pumping the vertical distance between the spillway and the pond bottom, a distance of 11 feet (see RA Plate 7-2). Drawdown of this magnitude and rate is not considered significant and, therefore, not a stability or erosion concern. The analysis presented in RA Attachment 5-1 indicates that the slope of the embankment will be stable under conditions of rapid drawdown (minimum safety factor of 2.2). During pumping of the sedimentation pond, flow rates (and drawdown) will be controlled. Hence, it is unlikely that this drawdown will cause surface erosion of the embankment face.

533.400 Embankment Faces

Embankment inslopes and portions of the outslopes were revegetated following construction of the sedimentation pond, as outlined in Section 533.300. Riprap will also be placed on the upstream face of the embankment near the emergency spillway structure.

533.500 Highwalls

No highwalls will be located below the discharge lines of the sedimentation pond.

533.600 MSHA Criteria

The sedimentation pond does not meet the size criteria of 30 CFR 216(a).

533.700 Pond Operation and Maintenance Plans

The sedimentation pond has been designed as a total containment pond to contain the 100-year, 24-hour storm event, plus an adequate freeboard. Details of the design and the requirements for operation and maintenance of the pond are presented in Chapter 7 of this submittal.

534 Roads

534.100 Location, Design, Construction, Reconstruction, Use, Maintenance, and Reclamation

No permanent roads will be constructed in the storage area. The refuse will be transported to the refuse pile area using the existing county road. A temporary access road between the refuse pile area and county road will be constructed to allow equipment access to the pile. The temporary road will be reclaimed. The temporary road will be maintained in accordance with the approved M&RP. Refer to Section 527.200 for additional description of the transportation facilities.

Control of Damage to Public or Private Property. Roads will be designed in accordance with applicable county and State standards. By designing according to these standards, damage to public or private property will be been minimized.

Road Surfacing. The county road surface, which accesses the mine site, consists of asphalt. The temporary access road surface material will be surfaced with asphalt. No acid- or toxic-forming materials will be used in the road surfaces. The characteristics of the substances used for road surfaces will be nonacid-and nontoxic-forming. The roads are not established on constructed lands and road slopes are less than 2:1.

534.200 Environmental Protection and Safety

The design and construction of the temporary road will be in accordance with Section 534.200 of the approved M&RP.

534.300 Primary Roads

The access road to the refuse pile will be constructed in accordance with the requirements of Section 534.300 of the M&RP.

535 Spoil

No spoil will be generated in the refuse pile permit area.

536 Coal Mine Waste

Coal mine and underground development waste resulting from mining activities at the Dugout Canyon Mine will be disposed of at the refuse pile.

536.100 Design

The designs and their associated evaluations were based on the results of detailed foundation and laboratory analyses of soils at the site of the refuse pile. These results are presented in RA Attachment 5-2 of this submittal.

Based on the materials encountered in the refuse pile site area, the refuse pile can be constructed to an approximate height of 60 feet with 2H:1V outslopes on the native alluvial soils and have a static safety factor of 1.59 for failure surfaces starting in the refuse and terminating in the underlying soils. If the weathered Mancos Shale, which is present over the majority of the site, is used in the evaluation, the static safety factor rises to 2.38 for the 60-foot height pile configuration. For failure surfaces originating and terminating in the refuse materials, the pile has a static safety factor of 2.27. Therefore, the proposed pile configuration meets the minimum regulatory requirements. Because the effects of bedrock were not included in the analyses, the results are considered to be conservative. RA Plate 5-1 presents the proposed configuration of the refuse pile. RA Plate 5-2 shows the reclamation topography and treatment for the refuse pile. Reclamation cross sections are shown on RA Plate 5-2A . The reclaimed refuse pile will have concave slopes with 2:1 slopes near the top of the pile and 3:1 slopes or less at the toe of the reclaimed slope. The top of the reclaimed pile will be regraded to have an irregular plateau surface that drains towards all pile outslopes instead of draining only towards one side of the pile. The top of the reclaimed refuse pile will have slopes of 6:1 or less. Where possible the reclaimed slopes will be varied to blend into the shape of undisturbed areas. Outslopes of the reclaimed pile will be varied as much as possible to prevent long straight surfaces with uniform slopes.

Storage capacity of the pile is estimated to be approximately 1,018,792 tons of refuse. Calculations are presented in RA Attachment 5-3.

536.200 Waste Emplacement

Construction. Prior to the start of refuse pile construction, the appropriate sediment control facilities (sediment pond, undisturbed diversion ditch/berm, and disturbed area diversions) described in Chapter 7 were in place. Since initial waste rock storage will occur in an area 4 feet below natural grade, it is anticipated that ditches DD-1 and DD-2 will be constructed to their full extent only after waste reaches a level equal to the currently existing ground surface. An interim berm will be constructed to direct surface runoff away from the storage area below grade and toward ditch DD-3 and the sediment pond. RA Plate 5-1 presents the layout of the refuse pile areas.

Vegetative cover will be removed from the refuse site area, prior to placement of any coal mine or underground development waste. Soil materials shall be removed, stockpiled, and properly protected for future use in reclaiming the site. As the site has previously been disturbed there is no topsoil present. CFC commits to reasonable mechanized efforts to collect the maximum amount of soil materials still present on the site. It is anticipated that all suitable soil materials down to the Mancos Shale will be stripped. The soil materials salvaged from the strip area will be stored in the soil stockpile. The details of the soil salvage operations and estimates of the volume of soil to be stripped are presented in Chapter 2.

Once the soils have been stripped from the area, the refuse material will be placed. Based on prior experience, the refuse materials anticipated to be generated by the mine will generally consist of shale with some sandstone, bone coal, and in limited quantities, sandstone from paleochannels.

Sediment pond wastes from either the mine site or refuse area sediment pond will be stored in the refuse pile.

Coal processing waste to will be stored at the refuse site, should economics justify the washing of coal. Waste stored at the refuse site will be hauled to a wash facility for processing and the waste material not shipped to customers will be returned to the Dugout refuse site for disposal. The waste

material returned to the Dugout refuse site could be from any of the Canyon Fuel mines. Waste material from other than Dugout Mine will be approved by the Division prior to placement at the Dugout refuse site. The returned waste materials will be sampled as described below under the subheading "Testing".

Operation. Refuse materials will be hauled to the site using either belly dump trailers or end dump trucks. At the refuse site, the trucks will deposit the refuse on a fill bench, where it will be spread and compacted by truck and equipment traffic. Successive lift will be allowed to drain (when necessary) before it is capped with the next lift in the construction sequence.

The gradation of the refuse material will most likely be coarse and poorly graded with a small percentage of fine materials. Therefore, it is necessary to rework and level the lifts to assist in achieving the desired densities and prevent the formation of large voids. Additional compaction of each lift can be accomplished by routing the loaded haul trucks over the lift surface in such a manner as to cover the surface uniformly.

Waste rock loads containing non-cemented, soft shale, clay, or fine-grained materials shall be mixed with coarser graded loads in a controlled manner to limit concentrations of fine materials within the fill. This will be especially true for sediment pond wastes from either the mine site or refuse area sediment pond.

All lifts will be emplaced in a controlled manner to ensure the mass stability of the refuse pile and prevent mass movement during and after construction. Additionally, the lifts shall be graded to promote drainage off the pile surface. No intentional impoundments will be created by the placement of the refuse materials.

As the limits of the site area are reached laterally, the outer slope shall conform to the slope indicated in RA Plate 5-1.

Maintenance. Coal mine and underground development waste may have high moisture content. Controlled placement and compaction of the refuse materials will minimize the potential for spontaneous combustion or ignition of these materials. In the unlikely event that any burning waste

is found during the regular inspections of the refuse pile area, it will be separated and extinguished either by burying the burning materials or by using water sprays. Once extinguished, the material will be placed, compacted, and buried on the active refuse pile bench.

Testing. Due to the anticipated coarse, open graded nature of the refuse materials, most quality control work for the fill will have to be on a visual basis. Conventional in-place density tests will not give reliable results under these circumstances.

Based on analyses of the materials that have been encountered in the Dugout Canyon Mine and other CFC mines to date, no acid-forming problems are anticipated. When the site is receiving materials, a representative sample will be collected of the material at a rate of one sample per 2,000 cubic yards of material through the fourth quarter of 2005 and one sample per 5,000 cubic yards of material, thereafter. These samples will be analyzed for the parameters listed in Table 6 of the Division's topsoil and overburden guidelines (Leatherwood and Duce, 1988). Analyses reports of the sampled waste rock will be submitted with the annual report.

Should a problem be identified, a mitigation plan will be prepared and submitted to the Division for approval. All identified potential acid or toxic-forming materials will be buried after the material handling plan is approved by the Division.

Copies of the toxicity/acid-base results from the samples collected at the Dugout Canyon Mine are presented in RA Attachment 5-4 and Appendix 5-7 of the approved M&RP.

537 Regraded Slopes

537.100 Division Approval

No mining or reclamation activities will be conducted in the refuse pile permit area that require approval of the Division for alternative specifications or for steep cut slope.

537.200 Regrading of Settled and Revegetated Fills

Upon completion of the filling of the refuse pile, the site will be reclaimed. The refuse fill will be constructed in a prudent manner to ensure that the pile will be stable. Geotechnical analysis of the proposed configuration is presented in RA Attachment 5-2.

Based on the proposed construction plans, the pile will be constructed to achieve the final configuration. Following completion of the construction, the pile surface will be prepared for soil distribution and revegetation according to plans presented in Chapter 2 and 3 of this submittal.

540 RECLAMATION PLAN

541 General

541.100 Commitment

Upon the permanent cessation of coal mining and reclamation operations at the Dugout Canyon Mine, CFC will close, backfill, or otherwise permanently reclaim all affected areas in accordance with the R645 regulations and this reclamation plan.

541.200 Surface Coal Mining and Reclamation Activities

No surface coal mining and reclamation activities will be conducted in the permit area.

541.300 Underground Coal Mining and Reclamation Activities

No underground activities are planned for this site.

541.400 Environmental Protection Performance Standards Performance Standards

The plan presented herein is designed to meet the requirements of R645-301 and the environmental

protection performance standards of the State Program.

542 Narratives, Maps, and Plans

542.100 Reclamation Timetable

A timetable for the completion of each major step in the reclamation plan is presented in RA Figure 5-1. The first phase consists of regrading the site, placing soil, surface roughening, and seeding (vegetating) the site. This phase will take approximately six (6) months to complete based on the number and anticipated types of construction equipment to be used, the number of operators and laborers necessary to complete the work, and the number of weather days (when work cannot take place) anticipated to occur. Work will be completed sooner if bad weather is not encountered. The second phase will be an approximate 10 month period where the success of the surface reclamation will be evaluated in relation to the surface roughening and the initial seeding success. If the surface roughening and/or initial reseeding (vegetation) does not appear successful, additional seeding or reworking of portions of the reclaimed surface may be necessary.

542.200 Plan for Backfilling, Soil Stabilization, Compacting, and Grading

Based on the proposed construction plans, the pile will be constructed so that the pile will be at final configuration when the disposal of waste is completed. Therefore, it is anticipated that little regrading will need to be conducted. The construction plans for the refuse pile area were designed to meet the objectives of maximizing refuse storage quantities and maintaining a geotechnically stable base. The primary features of this plan are:

Constructing a 2H to 1V outslope for the refuse pile;

Placement of soil;

Revegetation and mulching of the soiled site; and

Breaching and filling of the sedimentation pond with embankment materials.

Following completion of the construction, the pile surface will be prepared for soil distribution from the soils in the stage storage area. The quantity of soil cover required for the refuse pile facility is discussed in Section 242 of this amendment.

Grading activities during operations will develop a pile with a final surface configuration approximating that defined by RA Plates 5-1. Once this final surface is achieved, the top two feet of the surface not be compacted or the surface will be ripped to prepare it for soil spreading. Details regarding soil placement and revegetation following regrading are provided in Chapters 2 and 3, respectively.

Sedimentation Pond Removal and Interim Sediment Control. The sedimentation pond will be retained for as long as practical during reclamation. Because the pond is constructed as an incised structure, the pond reclamation will consist primarily of breaching the pond and pushing the embankment into the pond to create a gentle slope. The emergency spillway outlet channel will be removed and the rock from the spillway will be used in the construction of reclaimed channel RD-1c. During reclamation the berm materials of the diversion ditches around the refuse pile will be pushed into the ditch and a free draining slope will be constructed to allow runoff from the pile site to enter the natural drainages. Once the sediment pond and ditch areas are adequately graded, the soil materials will be redistributed and revegetated in accordance with Chapters 2 and 3.

542.300 Final Surface Configuration Maps and Cross Sections

Final surface configuration maps and cross sections for the Dugout Canyon refuse pile site are provided on RA Plates 5-2 and 5-2A. The topography illustrated on RA Plate 5-2 shows the proposed pile configuration and the proposed final configuration of the ground surface. RA Plate 5-2A presents final configuration cross-sections of the refuse pile site.

542.400 Removal of Temporary Structures

No surface structures are planned to be associated with the refuse pile operation.

542.500 Removal of Sedimentation Pond

Refer to Section 542.200 of this amendment.

542.600 Roads

All temporary access roads constructed during refuse pile construction activities will be reclaimed when no longer needed for access to the site. Any surfacing material will be removed, the area will be regraded, ripped, and the final reclamation seed mix will be applied as specified in Chapter 3.

542.700 Final Abandonment of Mine Openings and Disposal Areas

No mine openings or disposal areas will exist in this area.

542.800 Estimated Cost of Reclamation

Refer to the existing M&RP. It is anticipated that the cost of reclamation of the refuse pile is adequately covered within the existing Dugout Canyon Mine reclamation bond.

550 RECLAMATION DESIGN CRITERIA AND PLANS

551 Casing and Sealing of Underground Openings

No underground openings will exist in the area.

552 Permanent Features

552.100 Small Depressions

No small depressions will be created as part of the refuse pile construction and reclamation. Additionally, the original topographic divide that existed on the site pre-disturbance will be enhanced as part of the refuse pile construction plan.

552.200 Permanent Impoundments

No permanent impoundments will be left following reclamation.

553 Backfilling and Grading

553.100 Disturbed Area Backfilling and Grading

Approximate Original Contour. As indicated earlier, the site of the refuse pile is a previously disturbed site. The proposed configuration of the site will comply with the post-mining land use and blend into the surrounding area.

Based on the proposed plan, a portion of the existing ground surface will be raised by the construction of the refuse pile. Prior to placing refuse, the soils present on the site will be stripped and temporarily stored on site. At final reclamation, the stored soil will be redistributed and revegetated as described in Chapters 2 and 3 of this submittal.

The reclaimed slopes of the refuse pile will have a similar shape to the slopes in the surrounding area, including concave slopes and slope breaks. The top of the reclaimed pile will be regraded to have an irregular plateau surface that drains towards all pile outslopes instead of draining only towards one side of the pile (refer to RA Plates 5-2 and 5-2A).

Erosion and Water Pollution. Sediment-control measures will be implemented during and following reclamation activities.

Prior to seeding, all areas with a slope steepness of 3H:1V or steeper will be roughened using a trackhoe. The final surface will consist of mounds and depressions capable of holding runoff. Refer to Sections 355 and 341 regarding erosion-control and revegetation.

During these activities temporary sediment controls will consist of installation of silt fences, berms, and/or straw bales, surface roughening, and re-establishment of the vegetative cover for the limited areas. As vegetation becomes established on the reclaimed surfaces, erosion potentials will be

further minimized. By minimizing erosion, water pollution will also be precluded.

Post-Mining Land Use. The disturbed area will be reclaimed in a manner that supports the approved post-mining land use.

553.200 Spoil and Waste

Spoil. No spoil will be generated within the permit area.

Coal Processing Waste. No coal processing waste will be generated within the permit area. However, should coal from the CFC mines be processed at a washing facility, there is potential for the processing waste to be returned to the refuse pile site for disposal.

553.250 Refuse Piles

The refuse pile site is a previously disturbed area. The site is to be located in a played out gravel pit. Therefore, little soil materials remain available on the site. The refuse pile surface will be prepared and the soil will be distributed and revegetated in accordance with the plans proposed in Chapters 2 and 3.

553.300 Exposed Coal Seams, Acid- and Toxic-Forming Materials, and Combustible Materials

No coal seams are present in the area.

553.400 Cut-and-Fill Terraces

No cut-and-fill terraces will be built at the site.

553.500 Highwalls From Previously Mined Areas

No highwalls exist or will be built at the refuse pile site.

553.600 Previously Mined Areas

The area has not been previously mined.

553.700 Backfilling and Grading - Thin Overburden

Backfilling and grading will occur during reclamation, as described in Sections 534.100 and 542.600.

553.800 Backfilling and Grading - Thick Overburden

Backfilling and grading will occur during reclamation, as described in Sections 534.100 and 542.600.

553.900 Regrading of Settled and Revegetated Fills

No settled or revegetated fills currently or will exist at the storage site.

560 PERFORMANCE STANDARDS

Coal mining and reclamation operations at the Dugout Canyon Mine will be conducted in accordance with the approved permit and the requirements of R645-301-510 through R645-301-553.

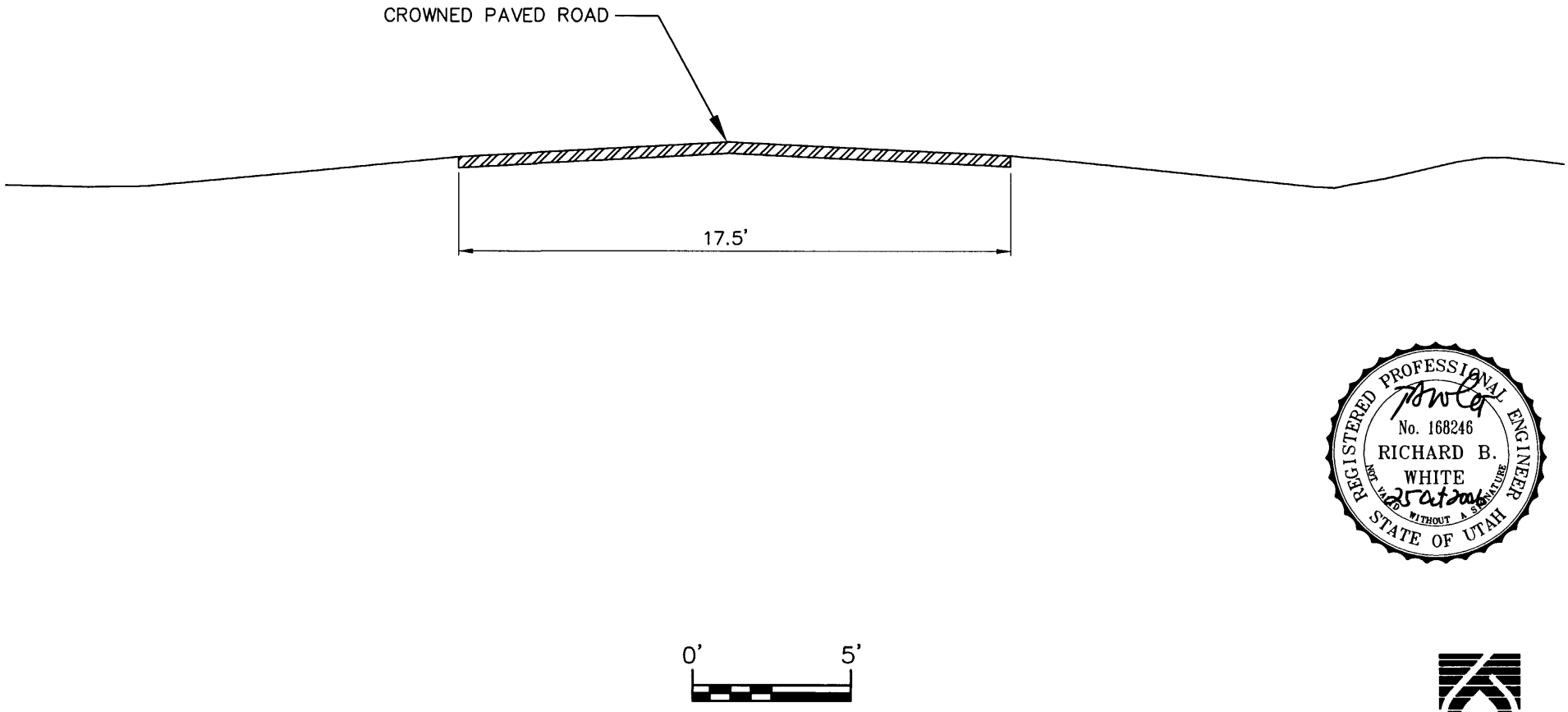

REGISTERED PROFESSIONAL ENGINEER
No. 168246
RICHARD B. WHITE
25 Oct 2006
NOT VALID WITHOUT A SIGNATURE
STATE OF UTAH

RA FIGURE 5-2. TYPICAL ACCESS ROAD CROSS-SECTION

EarthFax

G:\Uc801\15\dwg\FIG5-3.dwg, 10/25/2006 11:35:51 AM

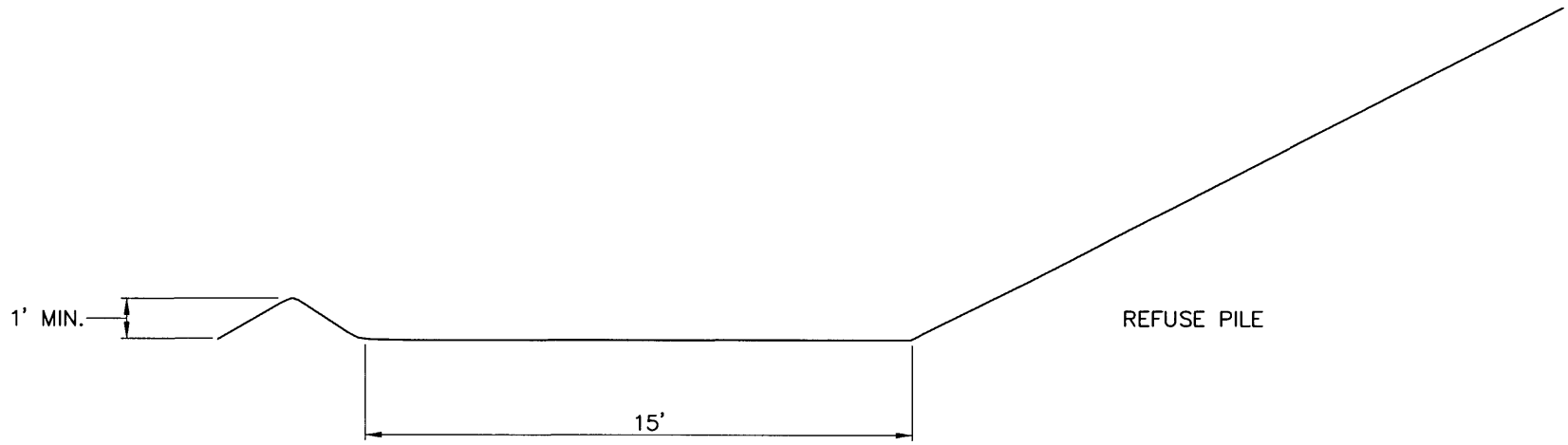

REGISTERED PROFESSIONAL ENGINEER
No. 168246
RICHARD B. WHITE
25 Oct 2006
NOT VALID WITHOUT A SIGNATURE
STATE OF UTAH

RA FIGURE 5-3. TYPICAL TEMPORARY ACCESS ROAD CROSS-SECTION

EarthFax

RA ATTACHMENT 5-2

REFUSE PILE SLOPE STABILITY EVALUATION

EarthFax

EarthFax
Engineering Inc
Engineers/Scientists
7324 So. Union Park Ave.
Suite 100
Midvale, Utah 84047
Telephone 801-561-1555
Fax 801-561-1861

November 10, 1999

Mr. Chris Hansen
Canyon Fuel Company, LLC
Dugout Canyon Mine
HC35 Box 380
Helper, Utah 84526

Subject: Results of a foundation investigation for the proposed waste-rock pile at the Dugout Canyon Mine

Dear Chris:

The purpose of this letter is to present the results of a foundation investigation for the proposed waste-rock pile at the Dugout Canyon Mine near Wellington, Utah. The proposed waste-rock pile is located about 4.5 miles southwest of the mine. The project was conducted in general accordance with the proposal from EarthFax dated September 8, 1999 except as noted below:

1. Only local areas with small quantities of weathered Mancos Shale were encountered. Therefore, only 2 series of laboratory tests (Atterberg Limits, gradation, hydrometer, and direct shear) were conducted on weathered Mancos Shale samples, rather than the three that were proposed.

2. Gradation and direct shear tests were conducted on samples of granular alluvium and silty sand from the site to provide soil strength parameters for all of the native soils.

3. Nine test pits were installed to investigate the different soil types, rather than the proposed six test pits.

4. One additional test pit was excavated near the proposed location of a sedimentation pond embankment for the waste-rock pile. Gradation and direct shear tests were conducted on a sample from this test pit. The data are presented in this report, but slope stability analyses were not conducted for the sedimentation pond embankment.

SOILS INFORMATION

The site was originally investigated by RB&G Engineering, Inc. (1998; Provo, Utah) as a potential borrow source for granular fill used at the Dugout Canyon Mine. The results of that investigation indicated that the soils consisted of interbedded layers of gravel and clay overlying Mancos Shale. Following removal and stockpiling of the topsoil, the soils were excavated, crushed, screened, and transported to the Dugout Canyon Mine. The excavation

typically continued until Mancos Shale was encountered. As a result, the remaining soil consisted primarily of remnants of granular alluvium and weathered Manco Shale.

Nine shallow test pits identified as DCW-1 through DCW-9 were excavated using a rubber tire backhoe within the footprint of the proposed waste-rock pile. One test pit was excavated near the proposed location of a sedimentation pond embankment for the waste-rock pile. The locations of the test pits are presented in Figure 1 (attached). The test pits were logged by a geotechnical engineer from EarthFax and by a soil scientist from EIS, Inc. (Salt Lake City, Utah). EarthFax's test pit logs are attached. Nuclear density/moisture tests were conducted on the surface soils at most of the test pits to provide remolding criteria for samples submitted for direct shear tests. Select samples were submitted to Applied Geotechnical Engineering Consultants, Inc. (Sandy, Utah) for geotechnical laboratory analyses.

According to the test pit logs, a thin layer (2 to 2.2 feet thick) of weathered Mancos Shale over Mancos Shale bedrock was encountered at Test Pits DCW-3 and DCW-9. Remnants (2.7 to 9 feet thick) of gravelly sand alluvium were encountered at Test Pits DCW-1, DCW-2, DCW-4, DCW-5. Mancos Shale was encountered below the alluvial soil at Test Pits DCW-1 and DCW-4. Test Pit DCW-6 contained layers of silty sand and sandy silt to a depth of 6 feet overlying alluvium to a depth of 7.5 feet. At Test Pit DCW-7, some coal, sandstone gravel, and soil extended to a depth of 0.7 feet, silty sand alluvium extended to a depth of 6 feet, and gravelly sand alluvium extended to a depth of about 7 feet. Stockpiled topsoil was encountered to a depth of 5 feet at Test Pit DCW-8, under which a gravelly sand alluvium extended to a depth of 6.5 feet. At the location of the proposed sedimentation pond embankment (Test Pit DCW-10), the subsurface soils consisted of a silty sand topsoil to a depth of 1.1 feet over a gravelly sand layer to a depth of 8.5 feet.

Results of the laboratory analyses are attached and are summarized in Table 1. Direct shear tests were conducted on samples that were remolded to the same dry density and moisture contents that were recorded in the field from the nuclear density/moisture tests. From Table 1:

- **Weathered Mancos Shale (Test Pits DCW-3 and DCW-9):** The material contained 0 to 49% gravel, 15 to 16% sand, 25 to 61% silt, and 10 to 24% clay. According to the Atterberg Limits data, the liquid limit was 26 to 33, the plastic limit was 17 to 18, and the plastic index was 9 to 15. The angle of internal friction ranged between 33 and 37 degrees, and the cohesion intercept values ranged between 1320 and 1360 pounds per square foot ("psf"). The direct shear tests were conducted under consolidated, undrained, unsaturated (moist) conditions.

- **Gravelly Sand Alluvium (Test Pit DCW-1):** The material contained 52% gravel, 30% sand, and 18% silt. The angle of internal friction was 43 degrees and the

soil was noncohesive from direct shear tests conducted under consolidated, undrained, unsaturated (moist) conditions.

- **Sandy Silt (Test Pit DCW-6):** The material contained 59% silt and 41% sand. The angle of internal friction was 45 degrees. and the soil was noncohesive from direct shear tests conducted under consolidated, undrained, unsaturated (moist) conditions.

- **Sedimentation Pond Embankment Subgrade (Test Pit DCW-10):** The material contained 34% gravel, 34% sand, and 32% silt. The angle of internal friction was 43 degrees and the cohesion intercept value was 210 psf from direct shear tests conducted under consolidated, undrained, unsaturated (moist) conditions.

WASTE-ROCK

The waste-rock to be placed at the site will originate as roof-fall and other rock materials being cleaned from the Dugout Canyon Mine. Similar waste-rock had been tested for a slope stability analysis of a temporary waste-rock pile at the Dugout Canyon Mine. The results of this analysis were presented in a letter dated July 27, 1998 from EarthFax Engineering to Canyon Fuel Company. As part of that investigation, gradation, Atterberg Limits, Standard Proctor compaction, and direct shear tests were conducted on the waste-rock. Results of these analyses are attached (data sheets dated July 15, 1998). According to these analyses, the waste-rock is coarse-grained, with about 95% retained on the No. 200 sieve (i.e., sand fraction or larger), and about 82% retained on the No. 4 sieve (i.e., gravel fraction). The material has further been classified as poorly-graded, with a Unified Soil Classification of GP-GM. The sample had an angle of internal friction of 35 degrees and a cohesion strength of 490 pounds per square foot. These strength parameters will be used for the slope stability analysis of the proposed waste-rock pile.

ASSUMPTIONS

The following assumptions were made for the slope stability analyses:

1. The waste-rock will be placed to a maximum thickness of 60 feet with a maximum outslope of 2 horizontal to 1 vertical (27 degrees).

2. As a worst-case condition, the native soil is vertically continuous and the failure surfaces do not intersect the Mancos Shale bedrock. This assumption was included because the Mancos Shale bedrock surface is variable.

3. The soil property parameters used for the analyses are representative of the native soils throughout the site. In the interest of conservatism, the weakest

soils from the direct shear tests were used for the analyses, which were as follows (see Table 1):

	Granular Soil	Weathered Mancos Shale
Angle of Internal Friction (degrees)	43	33
Cohesive Strength (psf)	0	1360

4. The soils do not become saturated, and there is no phreatic surface. The soils drain rapidly, and excess pore pressures do not develop in response to strains and stress changes.

5. The results of direct shear tests on the waste-rock presented in the letter dated July 27, 1998 from EarthFax Engineering to Canyon Fuel Company are representative of the proposed waste-rock pile. Therefore, the angle of internal friction is 35 degrees and the cohesive strength is 490 pounds per square foot.

RESULTS

Slope stability analyses were performed using the computer program GEOSLOPE (Version 5.0). GEOSLOPE utilizes the limit equilibrium procedure of slices (Simplified Bishop's method) to determine the safety factor of potential failure surfaces for circular shapes.

Prior to conducting the analyses, the topography of the native slope in Figure 1 was studied to determine the most critical slopes. The steepest native slopes occur along the southern end of the west edge of the property, where sections of the slope are about 30 to 40 degrees, although the slope lengths are relatively short. The longest native slopes occur along the eastern edge of the property, but the slope angles in this area are only 15 to 20 degrees. Intermediate slope angles and lengths are present in the vicinity of Test Pit DCW-10. Sections from all three of these areas were analyzed, and the results indicated that the most critical slopes occurred along the southern end of the west edge of the property. Therefore, the analysis cross-section for this project is presented as Section A-A' in Figure 1.

Using the assumptions presented above, results of the slope stability analyses are attached and are summarized in Table 2 (attached). The results of the stability analyses include the data files, the output files, and the cross-sections that show the trial failure surfaces and the ten critical failure surfaces. Table 2 includes a description of the analysis slope, the number of trial failure surfaces, and the safety factor against sliding. From Table 2, the critical safety factor was 1.59 for failure surfaces originating at the toe of the native slope (alluvial soil) and terminating in the waste-rock pile. When soil strength parameters for

weathered Mancos Shale were used for the native soils, the safety factor increased to 2.38. The critical safety factor was 2.27 for failure surfaces originating and terminating in the waste-rock pile. These values satisfy the minimum regulatory requirement of 1.5 promulgated by the Utah Division of Oil, Gas, and Mining (R645-301-536.110). Because the effects of bedrock were not included in the analyses, the results are considered to be conservative.

We have appreciated the opportunity to provide this information. If you have any questions, please call.

Sincerely,

Rhett Brooks

Rhett Brooks, P.E.
EarthFax Engineering, Inc.

cc: Richard White, EarthFax
Tom Suchoski, EarthFax

REGISTERED PROFESSIONAL ENGINEER
92-187704-2202
RHETT K. BROOKS
STATE OF UTAH

Rhett Brooks
Nov. 10, 1999

REFERENCES

RB&G Engineering, Inc. 1998. Canyon Fuel Company, Dugout Canyon Surface Coal Handling Facilities near Wellington, Utah. Project report dated June 1998 prepared for Canyon Fuel Company. Provo, Utah.

Utah Division of Oil, Gas, and Mining. 1996. Utah Coal Mining Regulations. Salt Lake City, Utah.

TABLE 1

SUMMARY OF LABORATORY TEST RESULTS

Test Pit and Depth (Ft.)	Gradation (%)				Atterberg Limits			Direct Shear Test Values	
	Gravel	Sand	Silt	Clay	Liquid Limit	Plastic Index	Plastic Limit	Cohesive Strength (psf)	Angle of Internal Friction (degrees)
DCW-1 0-3.2[a]	52	30	18		--	--	--	0	43
DCW-3 0-2.2[b]	49	16	25	10	33	15	18	1320	37
DCW-6 2.5-6[c]	0	41	59		--	--	--	0	45
DCW-9 0-1.2[d]	0	15	61	24	26	9	17	1360	33
DCW-10 1.1-8.5[e]	34	34	32		--	--	--	210	43

(a) Alluvium. Sample for direct shear test remolded to a dry density of 115 pcf at a moisture content of 6%, which were the results of a nuclear density/moisture test conducted on the ground surface near the test pit. Direct shear test conducted under consolidated-undrained (CU) unsaturated conditions with vertical effective pressures of 1200, 3600, and 6000 psf.

(b) Weathered Mancos Shale. Direct shear test samples remolded to a dry density of 113 pcf at a moisture content of 6%, which were the results of a nuclear tests conducted on the ground surface near the test pit. Direct shear test conducted under consolidated-undrained (CU) unsaturated conditions with vertical effective pressures of 1200, 3600, and 6000 psf.

(c) Silty sand. Sample for direct shear test remolded to a dry density of 112 pcf at a moisture content of 9%, which were the results of a nuclear density/moisture test conducted on the ground surface near the test pit. Direct shear test conducted under consolidated-undrained (CU) unsaturated conditions with vertical effective pressures of 1200, 3600, and 6000 psf.

(d) Weathered Mancos Shale. Direct shear test samples remolded to a dry density of 98 pcf at a moisture content of 6%, which were the results of a nuclear test conducted on the ground surface near the test pit. Direct shear test conducted under consolidated-undrained (CU) unsaturated conditions with vertical effective pressures of 1200, 3600, and 6000 psf.

(e) Silty Sand at proposed location of a sedimentation pond embankment. Direct shear test samples remolded to a dry density of 100 pcf at a moisture content of 8%, which were the results of a nuclear test conducted on the ground surface near the test pit. Direct shear test conducted under consolidated-undrained (CU) unsaturated conditions with vertical effective pressures of 500, 1500, and 2500 psf.

TABLE 2

RESULTS OF SLOPE STABILITY ANALYSES

Slope	Number of Trial Failure Surfaces	Safety Factor
Native Soil (Alluvium) and Waste-Rock Pile	6200	1.59
Native Soil (Mancos Shale) and Waste-Rock Pile	6200	2.38
Waste-Rock Pile	6000	2.27

LEGEND

DCW-1
● TEST PIT LOCATION

0' 200'

FIGURE 1. TEST PIT LOCATIONS

EarthFax

TEST PIT DCW-1
(Excavated and logged on September 16, 1999)

Depth (ft.)	Description
0 - 3.2	Sandy Gravel w/ Silt and Cobbles. Alluvium. About 42% gravel, 30% sand, 10% cobbles, and 18% silt. Sand is typically fine to coarse grained. Cobbles are up to 7 inches in diameter, subround. Gravel is subround to subangular. Moist. No cementation or cohesion. Good foundation material or fill material. From a 12-inch nuclear density/moisture test: moisture content = 5.7%, dry density = 115.5 pounds per cubic foot, wet density = 122.1 pounds per cubic foot. Brown 10YR 4/3. GM.
3.2 - 4.6	Mancos Shale Bedrock. Fractured. Gray. Hard to dig.

TEST PIT DCW-2
(Excavated and logged on September 16, 1999)

Depth (ft.)	Description
0 - 7.7	Gravelly Sand w/ Silt, Cobbles, and Boulders. Alluvium. About 45% sand, 25% gravel, 15% cobbles/boulders, and 15% silt. Sand is typically fine to coarse grained. Gravel is subround to subangular. Moist. No cementation or cohesion. Good foundation material or fill material. From a 8-inch nuclear density/moisture test: moisture content = 7.8%, dry density = 115.0 pounds per cubic foot, wet density = 124.0 pounds per cubic foot. Brown 10YR 4/3. Boulders at bottom impeded digging deeper. SM.

TEST PIT DCW-3
(Excavated and logged on September 16, 1999)

Depth (ft.)	Description
0 - 2.2	Weathered Mancos Shale. 49% gravel (fractured Mancos Shale), 16% sand, 25% silt, and 10% clay. Loose in top 3 inches, firmer and less weathered with depth. From a 12-inch nuclear density/moisture test: moisture content = 5.6%, dry density = 112.6 pounds per cubic foot, wet density = 118.8 pounds per cubic foot.
2.2 - 3.2	Mancos Shale Bedrock. Fractured and slightly weathered. Gray. Hard to dig.

TEST PIT DCW-4
(Excavated and logged on September 16, 1999)

Depth (ft.)	Description
0 - 2.7	Gravelly Sand w/ Silt. Alluvium. About 55% sand, 20% gravel, 10% cobbles, and 15% silt. Sand is typically fine to coarse grained. Cobbles are up to 7 inches in diameter, subround. Gravel is subround to subangular. Moist. No cementation or cohesion. Good foundation material or fill material. From a 12-inch nuclear density/moisture test: moisture content = 5.7%, dry density = 115.5 pounds per cubic foot, wet density = 122.1 pounds per cubic foot. Brown 10YR 4/3. SM.
2.7 - 3.2	Mancos Shale Bedrock. Fractured. Gray. Hard to dig.

TEST PIT DCW-5
(Excavated and logged on September 16, 1999)

Depth (ft.)	Description
0 - 9	Gravelly Sand w/ Silt. Alluvium. About 55% sand, 20% gravel, 10% cobbles, and 15% silt. Sand is typically fine to coarse grained. Cobbles are up to 7 inches in diameter, subround. Gravel is subround to subangular. Moist. No cementation or cohesion. Good foundation material or fill material. From a 12-inch nuclear density/moisture test: moisture content = 5.7%, dry density = 115.5 pounds per cubic foot, wet density = 122.1 pounds per cubic foot. Brown 10YR 4/3. SM.

TEST PIT DCW-6
(Excavated and logged on September 16, 1999)

Depth (ft.)	Description
0 - 1.5	Silty Sand. About 60% sand and 40% silt. Sand is very fine to fine grained. Nonplastic. Numerous large roots from pine trees. From a 12-inch nuclear density/moisture test: moisture content = 8.8%, dry density = 102.9 pounds per cubic foot, wet density = 111.9 pounds per cubic foot. Yellowish brown 10YR 5/4. SM.
1.5 - 2.5	Sandy Silt. About 65% silt and 35% silt. Sand is very fine grained. Low plasticity, somewhat cohesive. Dry and hard. Very friable. ML.
2.5 - 6	Sandy Silt. About 59% silt and 41% sand. Sand is very fine grained. Nonplastic. Probably a blow sand layer. Light yellowish brown 2.5Y 6/3. ML.
6 - 7.5	Gravelly Sand w/ Silt. Alluvium. About 55% sand, 20% gravel, 10% cobbles/boulders, and 15% silt. Sand is typically fine to coarse grained. Gravel is subround to subangular. Moist. No cementation or cohesion. Brown 10YR 4/3. SM.

TEST PIT DCW-7
(Excavated and logged on September 16, 1999)

Depth (ft.)	Description
0 - 0.7	Mix of Rubbish. Mix of coal, sandstone, and dark brown soil (silt through cobbles). SM.
0.7 - 6	Silty Sand w/ Gravel. Alluvium. About 70% sand, 10% gravel/cobbles, 20% silt. Sand is typically fine to coarse grained. Gravel is subround to subangular. Moist. No cementation or cohesion. Brown 10YR 4/3. SM.
6 - 7	Gravelly Sand w/ Silt. Alluvium. About 55% sand, 20% gravel, 10% cobbles, and 15% silt. Sand is typically fine to coarse grained. Gravel is subround to subangular. Moist. No cementation or cohesion. Brown 10YR 4/3. SM.

TEST PIT DCW-8
Topsoil Stockpile
(Excavated and logged on September 16, 1999)

Depth (ft.)	Description
0 - 5	Topsoil Stockpile. Topsoil that had been stripped from the site and piled in this area. Primarily silty sand with gravel and organic matter.
5 - 6.5	Gravelly Sand w/ Silt. Alluvium. About 55% sand, 20% gravel, 10% cobbles, and 15% silt. Sand is typically fine to coarse grained. Gravel is subround to subangular. Moist. No cementation or cohesion. Brown 10YR 4/3. SM.

TEST PIT DCW-9
(Excavated and logged on September 16, 1999)

Depth (ft.)	Description
0 - 2	Weathered Mancos Shale. 61% silt, 24% clay, and 15% sand. Loose in top 14 inches, firmer and less weathered with depth. From a 12-inch nuclear density/moisture test: moisture content = 5.7%, dry density = 98.3 pounds per cubic foot, wet density = 103.8 pounds per cubic foot. CL.
2 - 2.5	Mancos Shale Bedrock. Fractured and slightly weathered. Gray. Hard to dig.

TEST PIT DCW-10
Near Proposed Sedimentation Pond Embankment
(Excavated and logged on September 16, 1999)

Depth (ft.)	Description
0 - 1.1	Silty Sand Topsoil. About 75% sand and 25% silt. Sand is very fine to fine grained. Nonplastic. Numerous fine roots. From a 12-inch nuclear density/moisture test: moisture content = 8.2%, dry density = 95.9 pounds per cubic foot, wet density = 103.7 pounds per cubic foot. Brown 10YR 4/3. SM.
1.1 - 8.5	Gravelly Sand w/ Silt. Alluvium. About 34% sand, 34% gravel/cobbles, and 32% silt. Sand is typically fine to coarse grained. Gravel is subround to subangular. Moist. No cementation or cohesion. Brown 10YR 4/3. SM.

Applied Geotechnical Engineering Consultants, Inc.

July 15, 1998

TESTS CONDUCTED FOR SLOPE STABILITY ANALYSES OF A TEMPORARY WASTE-ROCK PILE AT THE DUGOUT CANYON MINE. RESULTS PRESENTED IN A LETTER DATED JULY 27, 1998, FROM EARTHFAX ENGINEERING TO CANYON FUEL COMPANY. RKB

Earthfax Engineering
7324 South 1300 East, Suite 100
Midvale, UT 84047

Attention: Richard B. White

Subject: Soils Laboratory Testing
AGEC Project No. 973301

Gentlemen:

Applied Geotechnical Engineering Consultants, Inc. was requested to provide laboratory testing on a sample received July 2, 1998. The following tests have been performed in general accordance with the test method listed.

Test	Test Method
Particle Size Analysis	ASTM D-422
Atterberg Limits	ASTM D-4318
Direct Shear	ASTM D-3080
Standard Proctor	ASTM D-698

The results of the laboratory testing are shown graphically in Figures 1-2. The direct shear test specimens were remolded to approximately 90% of the standard proctor maximum dry density near optimum moisture content. Only material passing the #4 sieve was used in direct shear testing.

If you have any questions, or if we can be of further service, please call.

Sincerely,

APPLIED GEOTECHNICAL ENGINEERING CONSULTANTS, INC.

Stephanie Francom

Stephanie Francom
Rev. SDA, E.I.T.

600 West Sandy Parkway • Sandy, Utah 84070 • (801) 566-6399 • FAX (801) 566-6493

Applied Geotechnical Engineering Consultants, Inc.

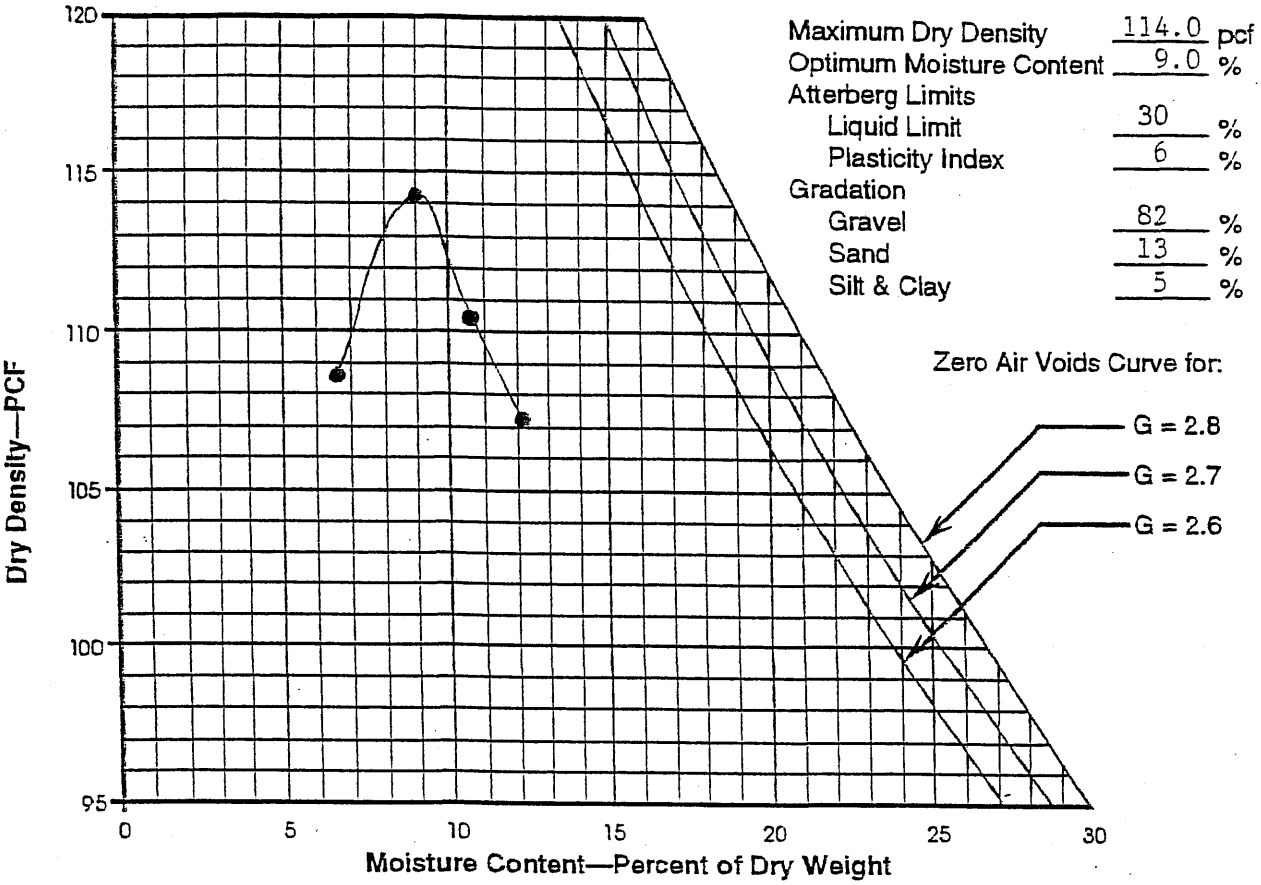

Maximum Dry Density	114.0	pcf
Optimum Moisture Content	9.0	%
Atterberg Limits		
Liquid Limit	30	%
Plasticity Index	6	%
Gradation		
Gravel	82	%
Sand	13	%
Silt & Clay	5	%

Compaction Test Procedure ASTM D-698 Method D

Sample of: Poorly-Graded Gravel with Silt (GP-GM) From: DCM-1 (7/6/98)

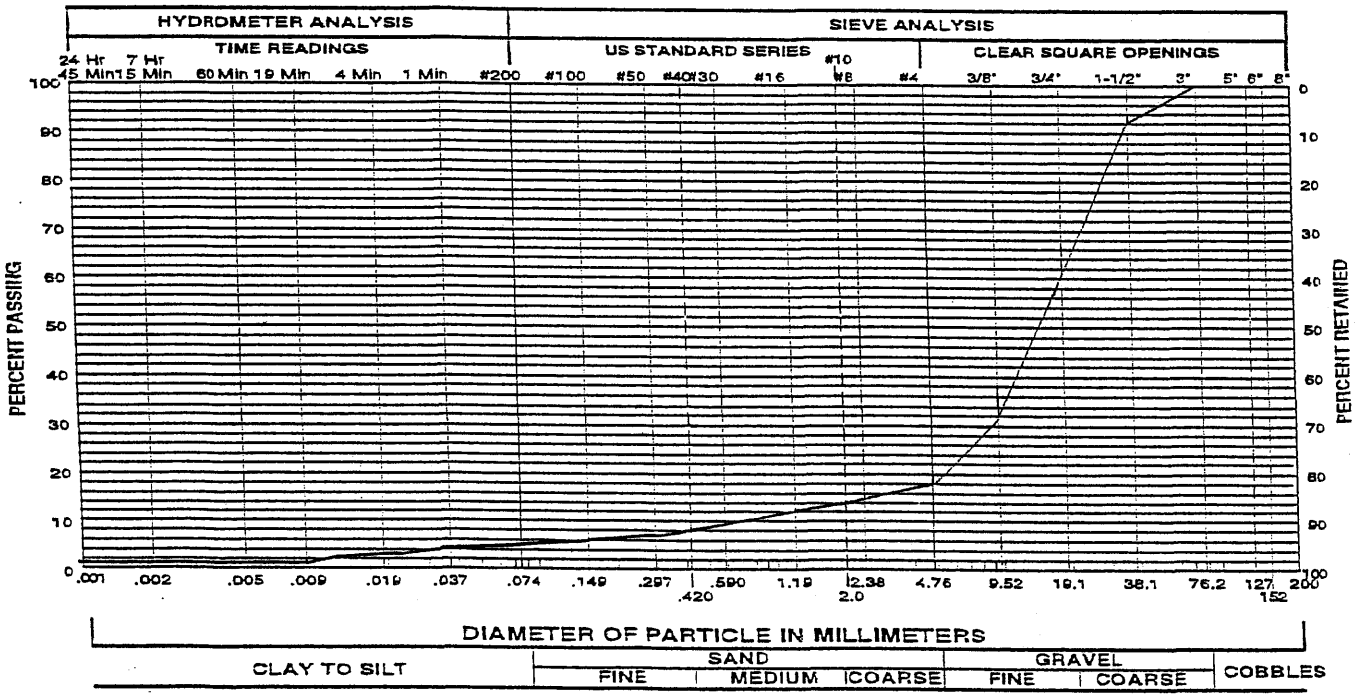

Project No. 973301

GRADATION & COMPACTION TEST RESULTS

Figure 1

Applied Geotechnical Engineering Consultants, Inc.

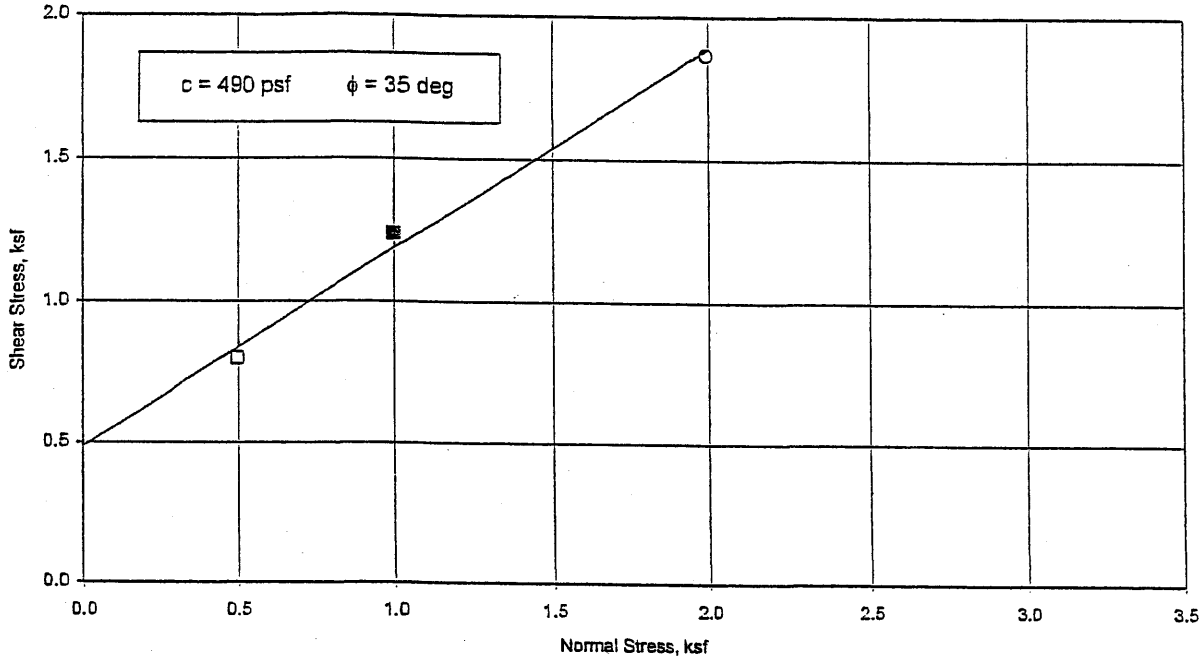

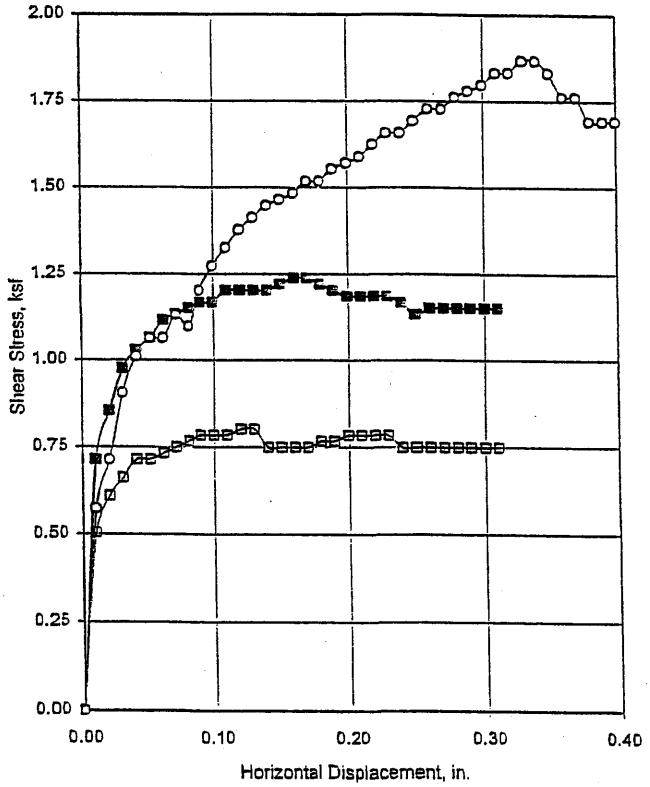

Test No. (Symbol)	1(□)	2(■)	3(○)
Sample Type	Remolded		
Length, in.	0.75	0.75	0.75
Diameter, in.	1.93	1.93	1.93
Dry Density, pcf	112	112	112
Moisture Content, %	9	9	9
Consolidation Load, ksf	0.5	1.0	2.0
Normal Load, ksf	0.5	1.0	2.0
Shear Stress, ksf	0.80	1.24	1.87
Remarks	Strain Rate 0.05 in/min.		
	Only soil passing the #4 sieve was used		
	in test.		

Sample Index Properties	
Dry Density, pcf	N/A
Moisture Content, %	N/A
Liquid Limit, %	30
Plasticity Index, %	6
Percent Gravel	82
Percent Sand	13
Percent Passing No. 200 Sieve	5

Type of Test: Consolidated Undrained/Saturated

Sample Description: Poorly Graded Gravel with Silt (GP-GM) From: DCM-1

Project No. 973301

DIRECT SHEAR TEST RESULTS

Figure 2

Applied Geotechnical Engineering Consultants, Inc.

October 19, 1999

Earthfax Engineering
7324 South 1300 East, Suite 100
Midvale, UT 84047

Attention: Rhett Brooks

Subject: Soil Testing for Waste Rock Pile Foundation Investigation
Dugout Canyon, Utah
AGEC Project No. 1990648

Gentlemen:

Applied Geotechnical Engineering Consultants, Inc. was requested to provide laboratory testing on five bucket samples delivered to our laboratory September 17, 1999. The following tests were performed in general accordance with the test methods listed.

Test	Test Method
Particle Size Analysis	ASTM D 422
Atterberg Limits	ASTM D 4318
Direct Shear	ASTM D 3080

The results of the laboratory testing are summarized in Table I and shown graphically in Figures 1 through 8.

If you have any questions, or if we can be of further service, please call.

Sincerely,

APPLIED GEOTECHNICAL ENGINEERING CONSULTANTS, INC.

Stephanie Merkley

Stephanie Merkley

Reviewed by SDA, E.I.T.

600 West Sandy Parkway • Sandy, Utah 84070 • (801) 566-6399 • FAX (801) 566-6493

APPLIED GEOTECHNICAL ENGINEERING CONSULTANTS, INC.

Table I. Summary of Laboratory Results

Sample Location	Gradation			Atterberg Limits		Sample Classification
	Gravel (%)	Sand (%)	Silt/ Clay (%)	Liquid Limit (%)	Plasticity Index (%)	
DCW-1 @ 0"-38"	52	30	18			Silty Gravel with Sand (GM)
DCW-3 @ 0"-26"	49	16	35	33	15	Clayey Gravel with Sand (GC)
DCW-6 @ 2.5'-6'	0	41	59			Sandy Silt (ML)
DCW-9 @ 0"-14"	0	15	85	26	9	Lean Clay with Sand (CL)
DCW-10 @ 13"-102"	34	34	32			Silty Sand with Gravel (SM)

Applied Geotechnical Engineering Consultants, Inc.

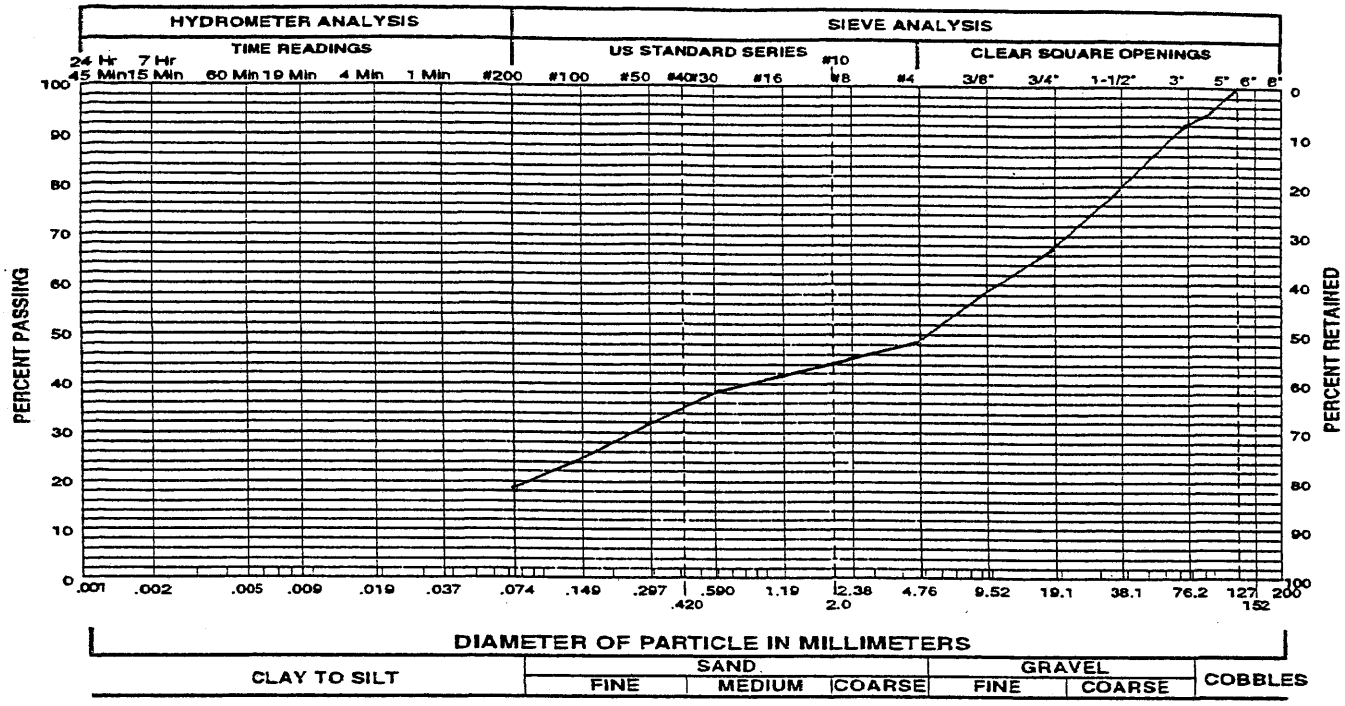

Gravel 52 % Sand 30 % Silt and Clay 18 %

Liquid Limit _____ % Plasticity Index _____ %

Sample of Silty Gravel with Sand (GM) From Test Pit DCW-1 @ 0"-38"

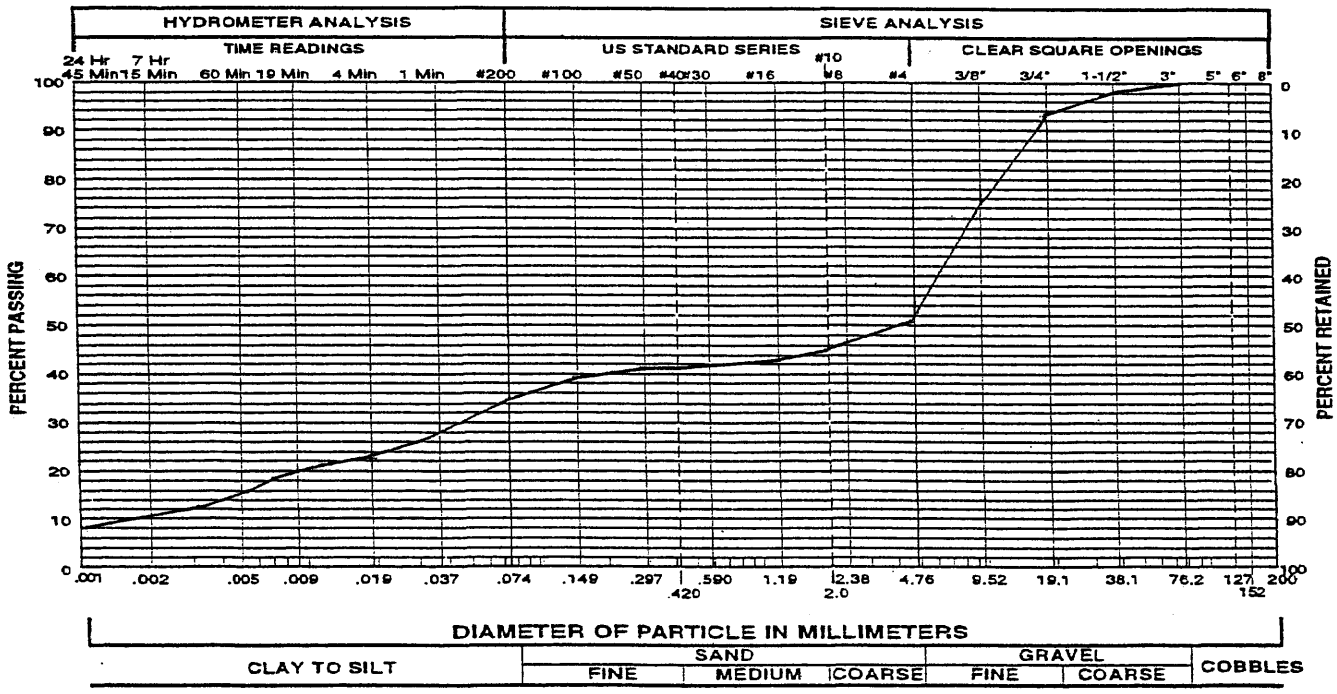

Gravel 49 % Sand 16 % Silt and Clay 35 %

Liquid Limit 33 % Plasticity Index 15 %

Sample of Clayey Gravel with Sand (GC) From Test Pit DCW-3 @ 0"-26"

Project No. 1990648 **GRADATION TEST RESULTS** Figure 1

Applied Geotechnical Engineering Consultants, Inc.

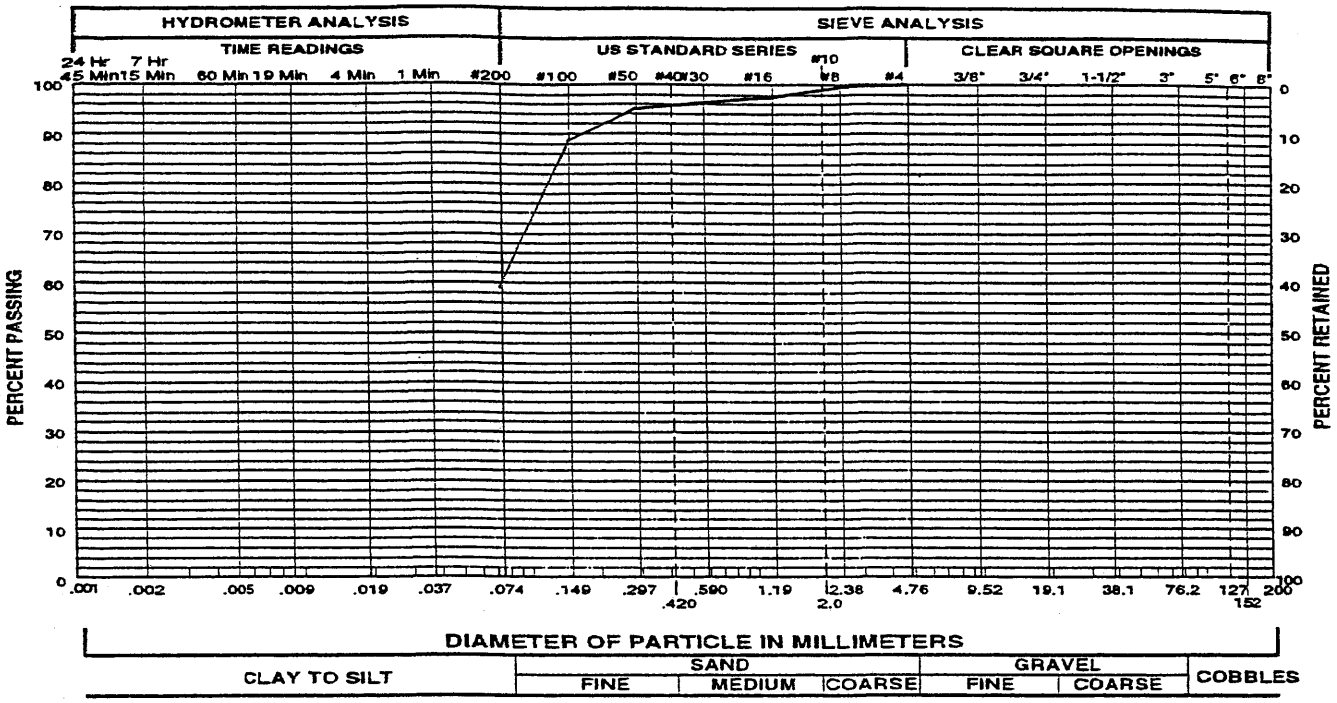

Gravel 0 % Sand 41 % Silt and Clay 59 %
Liquid Limit ____ % Plasticity Index ____ %
Sample of Sandy Silt (ML) From Test Pit DCW-6 @ 2.5'-6'

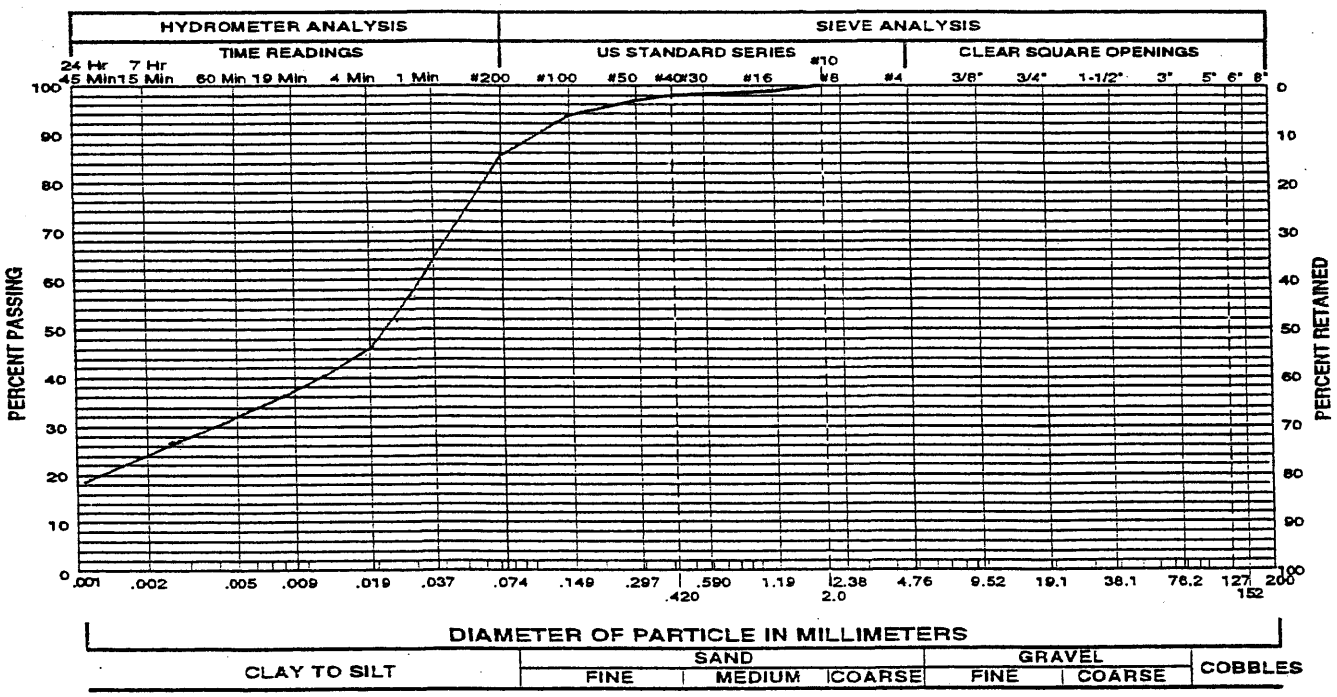

Gravel 0 % Sand 15 % Silt and Clay 85 %
Liquid Limit 26 % Plasticity Index 9 %
Sample of Lean Clay with Sand (CL) From Test Pit DCW-9 @ 0"-14"

Project No. 1990648 **GRADATION TEST RESULTS** Figure 2

Applied Geotechnical Engineering Consultants, Inc.

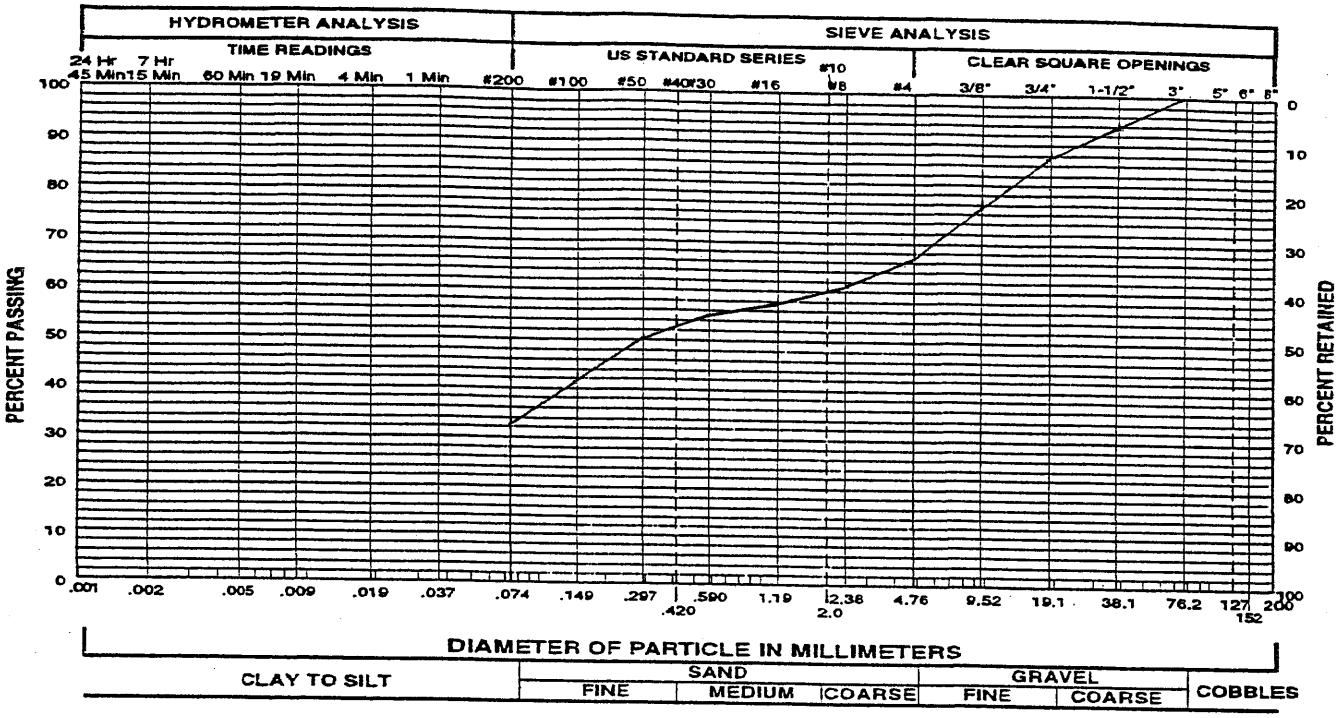

Gravel 34 % Sand 34 % Silt and Clay 32 %
Liquid Limit _____ % Plasticity Index _____ %
Sample of Silty Sand with Gravel (SM) From Test Pit DCW-10 @ 13"-102"

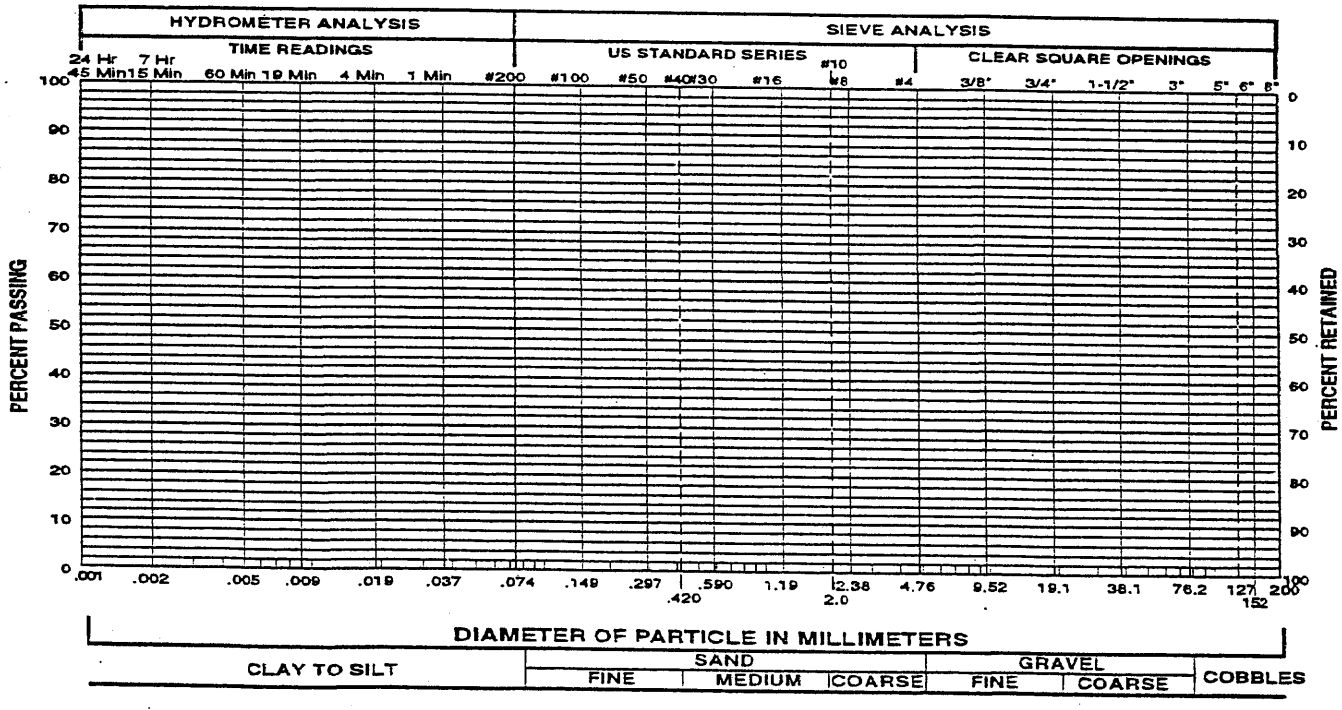

Gravel _____ % Sand _____ % Silt and Clay _____ %
Liquid Limit _____ % Plasticity Index _____ %
Sample of _____ From _____

Project No. 1990648 **GRADATION TEST RESULTS** Figure 3

Applied Geotechnical Engineering Consultants, Inc.

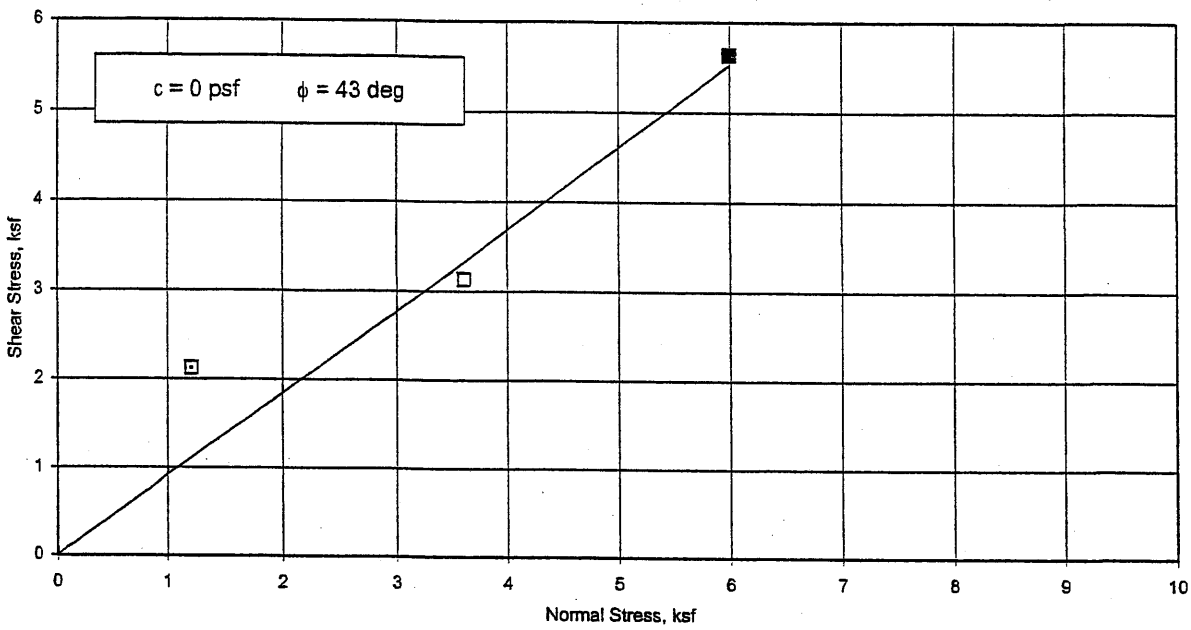

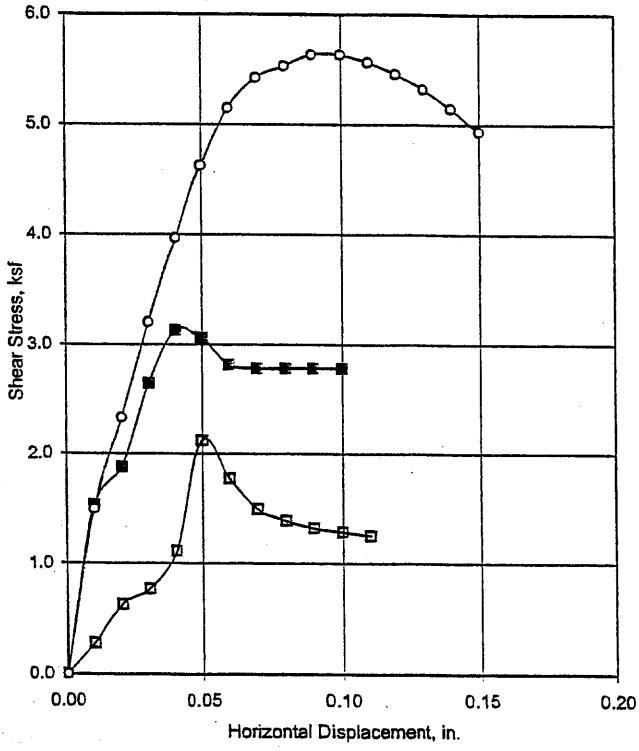

Test No. (Symbol)	1(□)	2(■)	3(○)
Sample Type	Remolded		
Length, in.	1.00	1.00	1.00
Diameter, in.	1.93	1.93	1.93
Dry Density, pcf	115	115	115
Moisture Content, %	6	6	6
Consolidation Load, ksf	1.2	3.6	6.0
Normal Load, ksf	1.2	3.6	6.0
Shear Stress, ksf	2.12	3.13	5.64
Remarks	Strain Rate 0.05 in/min.		
	Test performed on material passing the		
	No. 4 sieve.		

Sample Index Properties	
Dry Density, pcf	N/A
Moisture Content, %	N/A
Liquid Limit, %	N/A
Plasticity Index, %	N/A
Percent Gravel	52
Percent Sand	30
Percent Passing No. 200 Sieve	18

Type of Test: Consolidated Undrained/Unsaturated

Sample Description: Silty Gravel with Sand (GM) From: Test Pit DCW-1 @ 0"-38"

Project No. 1990648

DIRECT SHEAR TEST RESULTS

Figure 4

Applied Geotechnical Engineering Consultants, Inc.

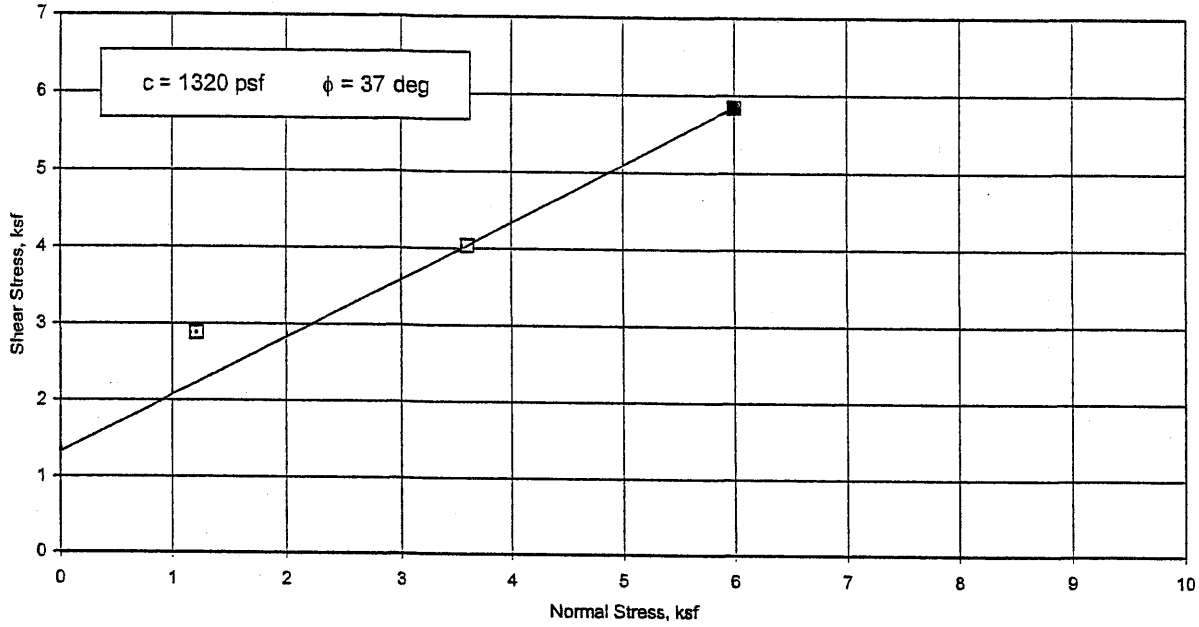

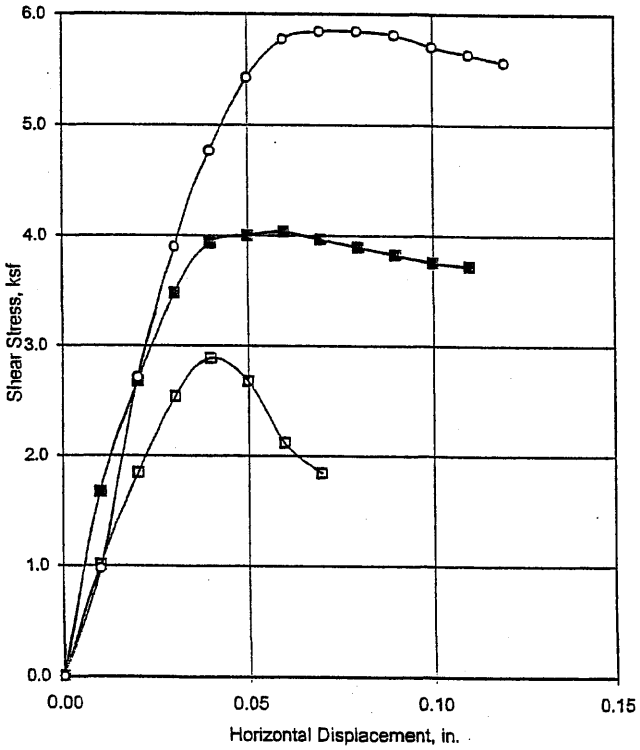

Test No. (Symbol)	1(□)	2(■)	3(○)
Sample Type	Remolded		
Length, in.	1.00	1.00	1.00
Diameter, in.	1.93	1.93	1.93
Dry Density, pcf	113	113	113
Moisture Content, %	6	6	6
Consolidation Load, ksf	1.2	3.6	6.0
Normal Load, ksf	1.2	3.6	6.0
Shear Stress, ksf	2.89	4.04	5.85
Remarks	Strain Rate 0.05 in/min.		
	Test performed on material passing the		
	No. 4 sieve.		

Sample Index Properties	
Dry Density, pcf	N/A
Moisture Content, %	N/A
Liquid Limit, %	33
Plasticity Index, %	15
Percent Gravel	49
Percent Sand	16
Percent Passing No. 200 Sieve	35

Type of Test: Consolidated Undrained/Unsaturated

Sample Description: Clayey Gravel with Sand (GC) From: Test Pit DCW-3 @ 0"-26"

Project No. 1990648

DIRECT SHEAR TEST RESULTS

Figure 5

Applied Geotechnical Engineering Consultants, Inc.

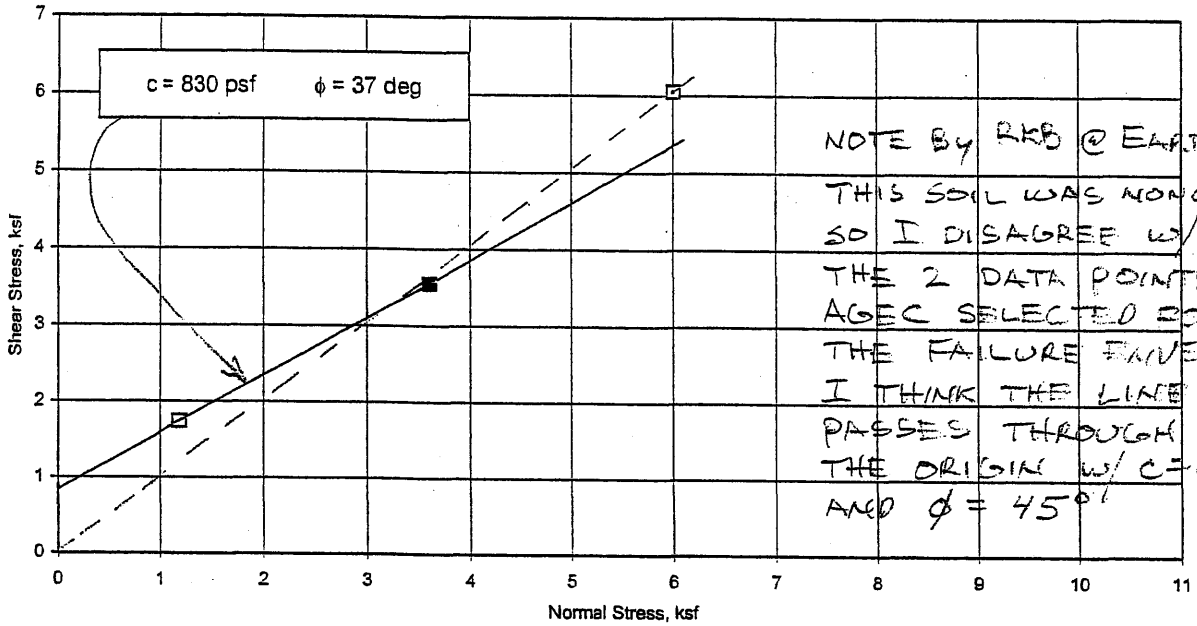

NOTE BY RKB @ EARTHFAX:
THIS SOIL WAS NONCOHESIVE,
SO I DISAGREE W/
THE 2 DATA POINTS
AGEC SELECTED FOR
THE FAILURE ENVELOPE.
I THINK THE LINE
PASSES THROUGH
THE ORIGIN W/ C=0 PSF
AND $\phi = 45°$

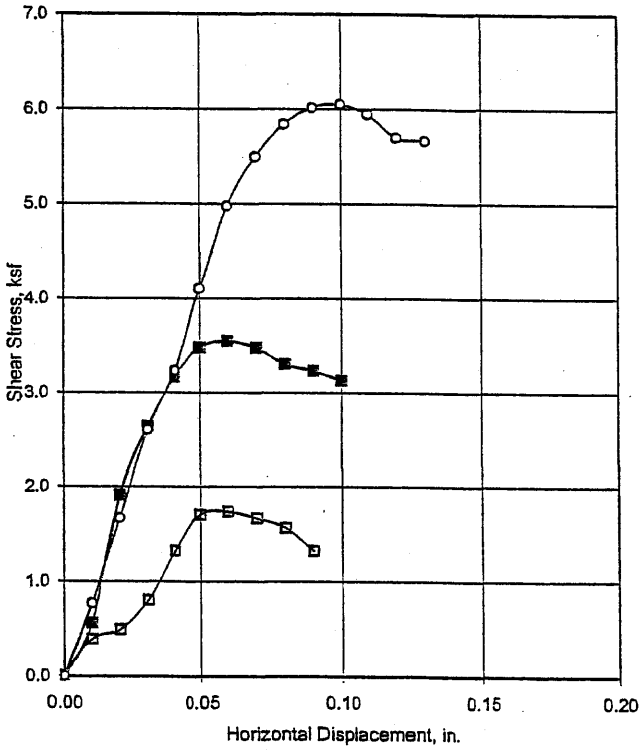

Test No. (Symbol)	1(□)	2(■)	3(O)
Sample Type	Remolded		
Length, in.	1.00	1.00	1.00
Diameter, in.	1.93	1.93	1.93
Dry Density, pcf	112	112	112
Moisture Content, %	9	9	9
Consolidation Load, ksf	1.2	3.6	6.0
Normal Load, ksf	1.2	3.6	6.0
Shear Stress, ksf	1.74	3.55	6.05
Remarks	Strain Rate 0.05 in/min.		
	Test performed on material passing the		
	No. 4 sieve.		

Sample Index Properties	
Dry Density, pcf	N/A
Moisture Content, %	N/A
Liquid Limit, %	N/A
Plasticity Index, %	N/A
Percent Gravel	0
Percent Sand	41
Percent Passing No. 200 Sieve	59

Type of Test: Consolidated Undrained/Unsaturated

Sample Description: Sandy Silt (ML) From: Test Pit DCW-6 @ 2.5'-6'

Project No. 1990648

DIRECT SHEAR TEST RESULTS

Figure 6

Applied Geotechnical Engineering Consultants, Inc.

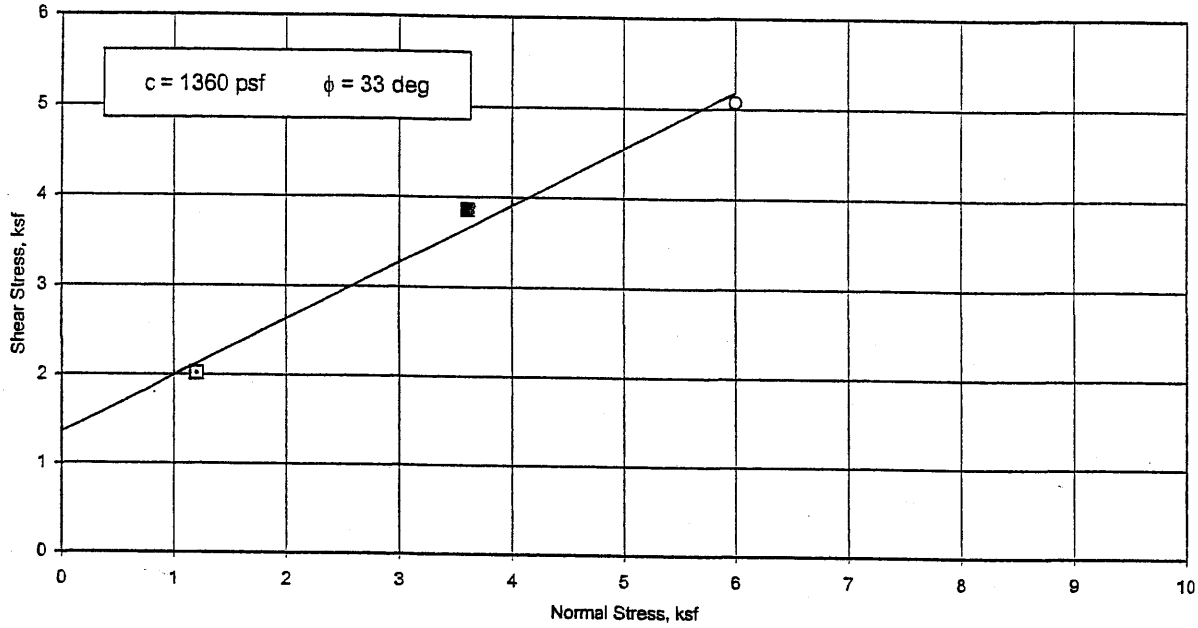

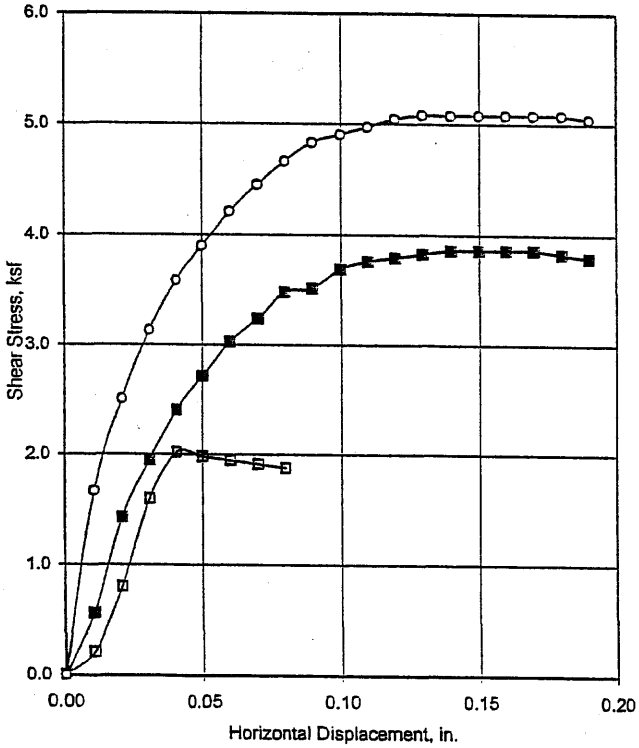

Test No. (Symbol)	1(□)	2(■)	3(○)
Sample Type	Remolded		
Length, in.	1.00	1.00	1.00
Diameter, in.	1.93	1.93	1.93
Dry Density, pcf	98	98	98
Moisture Content, %	6	6	6
Consolidation Load, ksf	1.2	3.6	6.0
Normal Load, ksf	1.2	3.6	6.0
Shear Stress, ksf	2.02	3.86	5.08
Remarks	Strain Rate 0.05 in/min.		
	Test performed on material passing the		
	No. 4 sieve.		

Sample Index Properties	
Dry Density, pcf	N/A
Moisture Content, %	N/A
Liquid Limit, %	26
Plasticity Index, %	9
Percent Gravel	0
Percent Sand	15
Percent Passing No. 200 Sieve	85

Type of Test: Consolidated Undrained/Unsaturated

Sample Description: Lean Clay with Sand (CL) From: Test Pit DCW-9 @ 0"-14"

Project No. 1990648

DIRECT SHEAR TEST RESULTS

Figure 7

Applied Geotechnical Engineering Consultants, Inc.

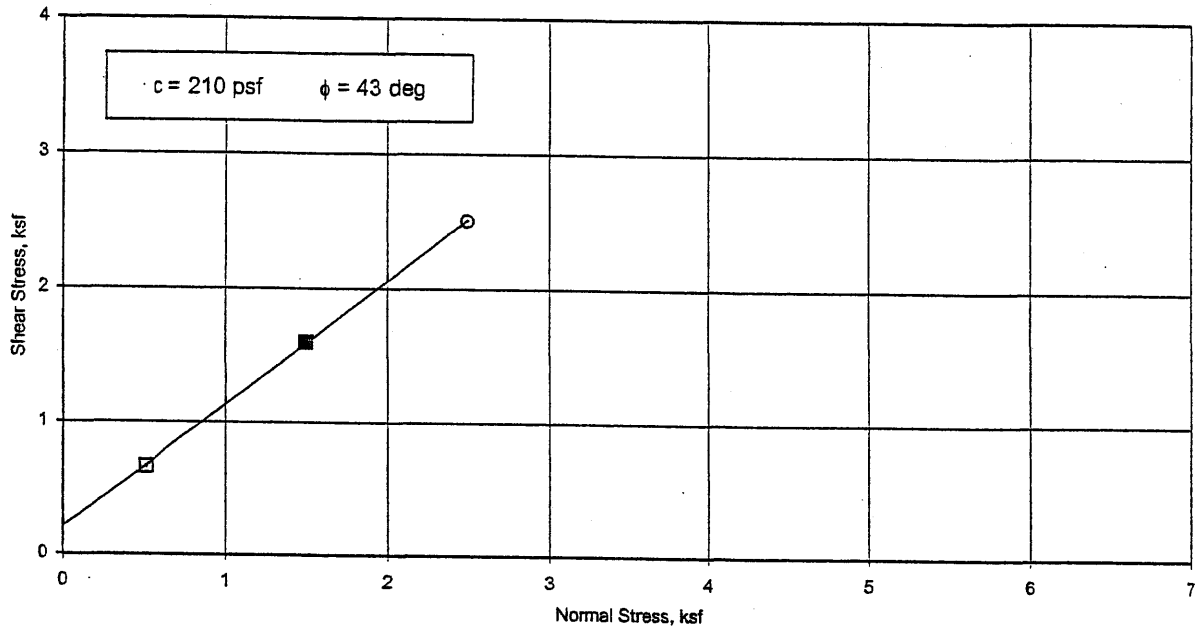

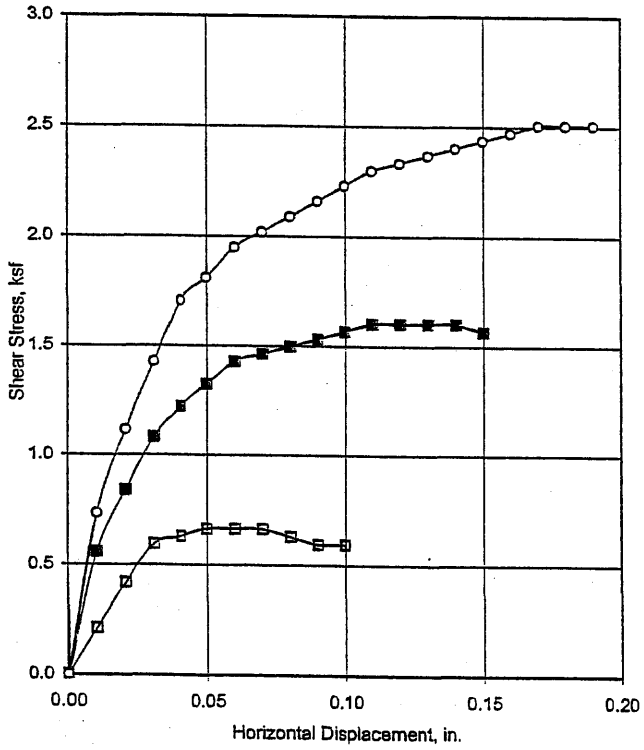

Test No. (Symbol)	1(□)	2(■)	3(○)
Sample Type	Remolded		
Length, in.	1.00	1.00	1.00
Diameter, in.	1.93	1.93	1.93
Dry Density, pcf	100	100	100
Moisture Content, %	8	8	8
Consolidation Load, ksf	0.5	1.5	2.5
Normal Load, ksf	0.5	1.5	2.5
Shear Stress, ksf	0.66	1.60	2.51
Remarks	Strain Rate 0.05 in/min.		
	Test performed on material passing the		
	No. 4 sieve.		

Sample Index Properties	
Dry Density, pcf	N/A
Moisture Content, %	N/A
Liquid Limit, %	N/A
Plasticity Index, %	N/A
Percent Gravel	34
Percent Sand	34
Percent Passing No. 200 Sieve	32

Type of Test: Consolidated Undrained/Unsaturated

Sample Description: Silty Sand with Gravel (SM) From: Test Pit DCW-10 @ 13"-102"

Project No. 1990648

DIRECT SHEAR TEST RESULTS

Figure 8

Bishop Circular Surfaces - Most Critical Surfaces

Canyon Fuel Company, LLC
Dugout Canyon Mine
Waste Rock Pile
Section A-A'
6200 Failure Surfaces
File: WRA-ALV.DAT

Minimum Factor of Safety : 1.591

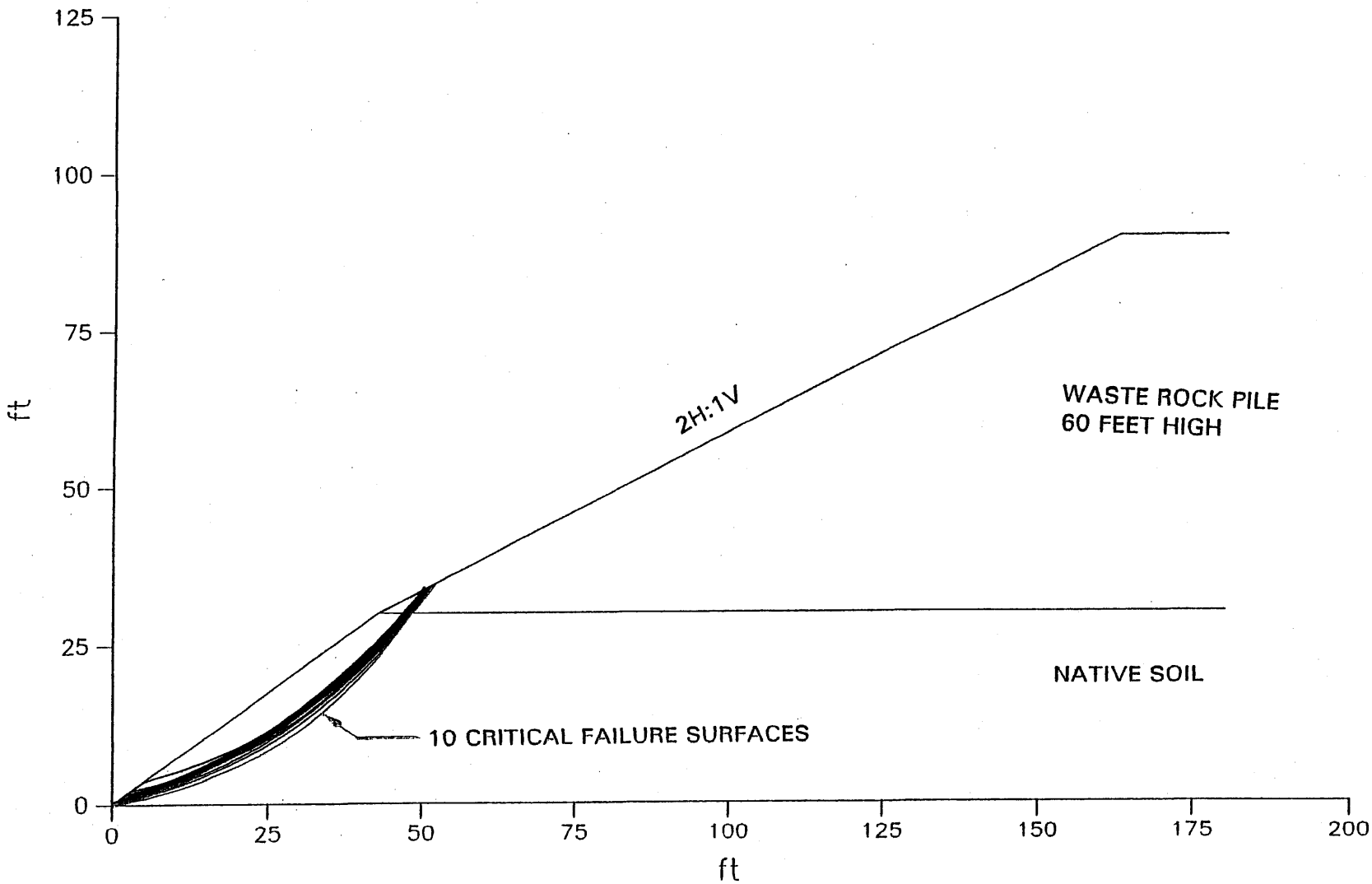

Bishop Circular Surfaces – Search for Critical Surfaces

Canyon Fuel Company, LLC
Dugout Canyon Mine
Waste Rock Pile
Section A-A'
6200 Failure Surfaces
File: WRA-ALV.DAT

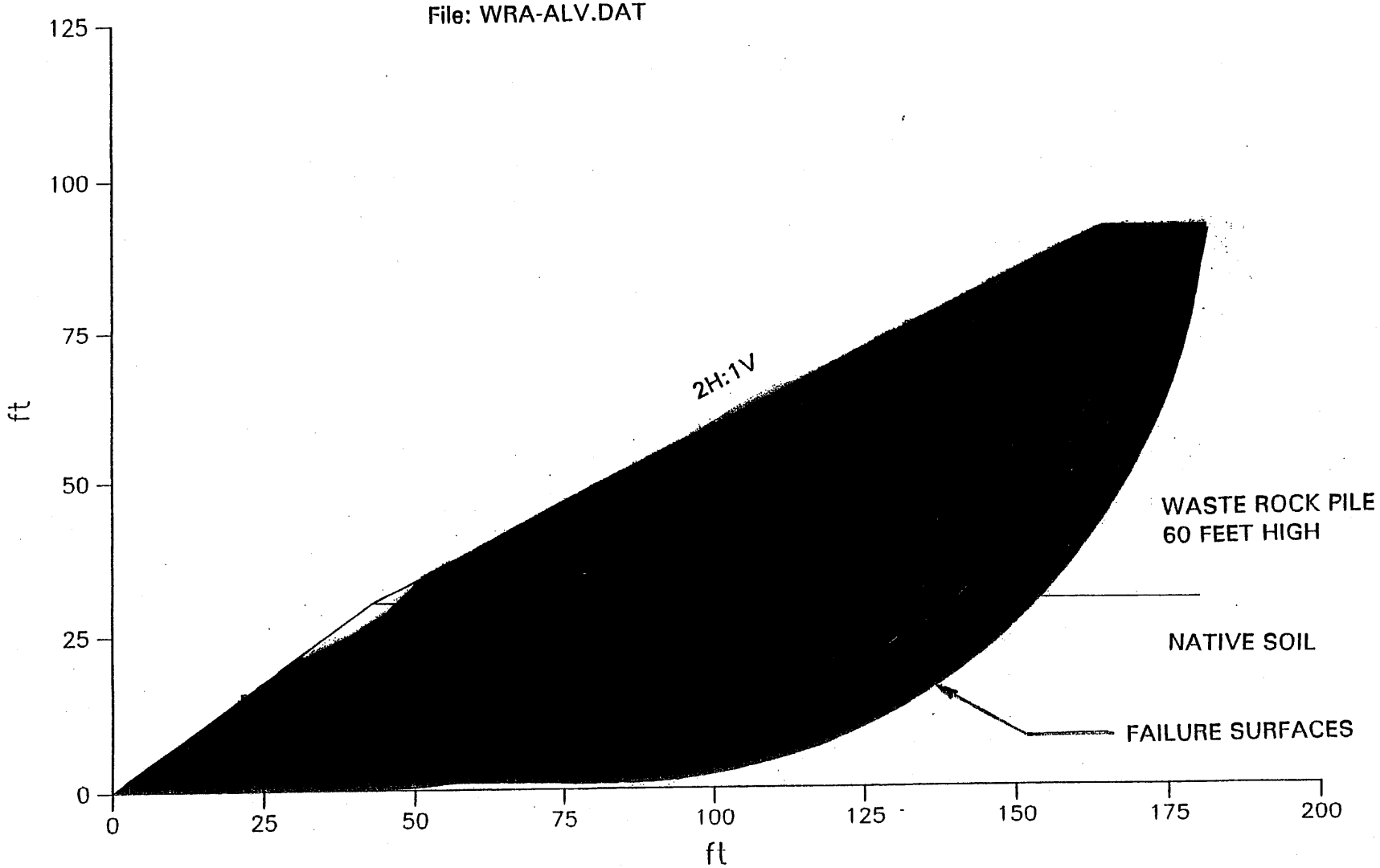

```
TITLE
DUGOUT CANYON MINE
PROPOSED WASTE-ROCK PILE
SECTION A-A', ALLUVIAL SOIL, NATIVE SLOPE
PROFIL
4 3
0 0 43 30 2
43 30 163 90 1
163 90 180 90 1
43 30 180 30 2
SOIL
2
122 122 490 35 0 0 0
122 122 0 43 0 0 0
CIRCL2
31 200 0 30 50 180 0 5 25 -35
END
```

```
*****************************************************************
*****                                                       *****
*****                    GeoSlope                           *****
*****                  Version 5.00                         *****
*****                                                       *****
*****                                                       *****
*****   (c)1992 by GEOCOMP Corp, Concord, MA                *****
*****          Licensed to EarthFax Engineering             *****
*****************************************************************
```

Problem Title: DUGOUT CANYON MINE
Description: PROPOSED WASTE-ROCK PILE
Remarks: SECTION A-A', ALLUVIAL SOIL, NATIVE SLOPE

```
*****************************************************************
*****                    INPUT DATA                         *****
*****************************************************************
```

Profile Boundaries

Number of Boundaries: 4
Number of Top Boundaries: 3

Boundary No.	X-Left (ft)	Y-Left (ft)	X-Right (ft)	Y-Right (ft)	Soil Type Below Bnd
1	0.00	0.00	43.00	30.00	2
2	43.00	30.00	163.00	90.00	1
3	163.00	90.00	180.00	90.00	1
4	43.00	30.00	180.00	30.00	2

Soil Parameters

Number of Soil Types : 2

Soil Type No.	Total Unit Wt. (pcf)	Saturated Unit Wt. (pcf)	Cohesion Intercept (psf)	Friction Angle (deg)	Pore Pressure Param.	Pressure Constant (psf)	Piez. Surface No.
1	122.0	122.0	490.0	35.0	0.00	0.0	0
2	122.0	122.0	0.0	43.0	0.00	0.0	0

****
***** TRIAL SURFACE GENERATION *****
****

Data for Generating Circular Surfaces

Number of Initiation Points:	31
Number of Surfaces From Each Point:	200
Left Initiation Point:	0.00 ft
Right Initiation Point:	30.00 ft
Left Termination Point:	50.00 ft
Right Termination Point:	180.00 ft
Minimum Elevation:	0.00 ft
Segment Length:	5.00 ft
Positive Angle Limit:	25.00 deg
Negative Angle Limit:	-35.00 deg

****
***** RESULTS *****
****

Critical Surfaces

No.	Safety Factor	Center X (ft)	Center Y (ft)	Circle Radius (ft)
1	1.591	-26.84	95.11	98.83
2	1.593	-16.84	79.65	81.41
3	1.612	-18.05	83.16	85.10
4	1.613	-10.85	74.00	73.23
5	1.619	-14.55	77.91	79.26
6	1.622	-12.11	76.75	76.17
7	1.628	-14.19	81.99	80.82
8	1.630	-14.40	82.43	81.29
9	1.633	-8.69	68.06	68.61
10	1.633	-20.87	90.73	92.21

Bishop Circular Surfaces Most Critical Surfaces

Canyon Fuel Company, LLC
Dugout Canyon Mine
Waste Rock Pile
Section A-A'
6200 Failure Surfaces
File: WRA-MS1.DAT

Minimum Factor of Safety : 2.387

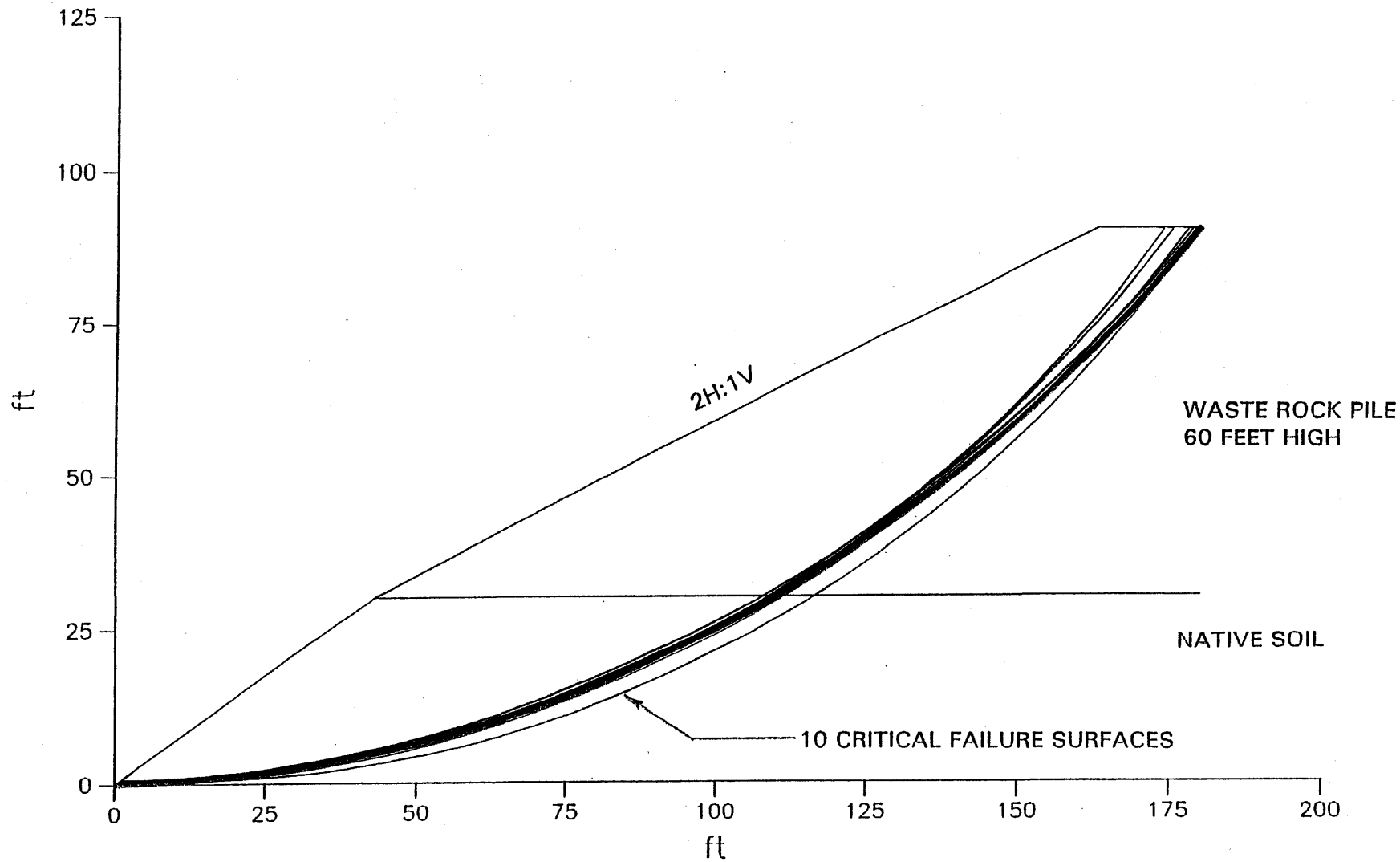

Bishop Circular Surfaces – Search for Critical Surfaces

Canyon Fuel Company, LLC
Dugout Canyon Mine
Waste Rock Pile
Section A-A'
6200 Failure Surfaces
File: WRA-MS1.DAT

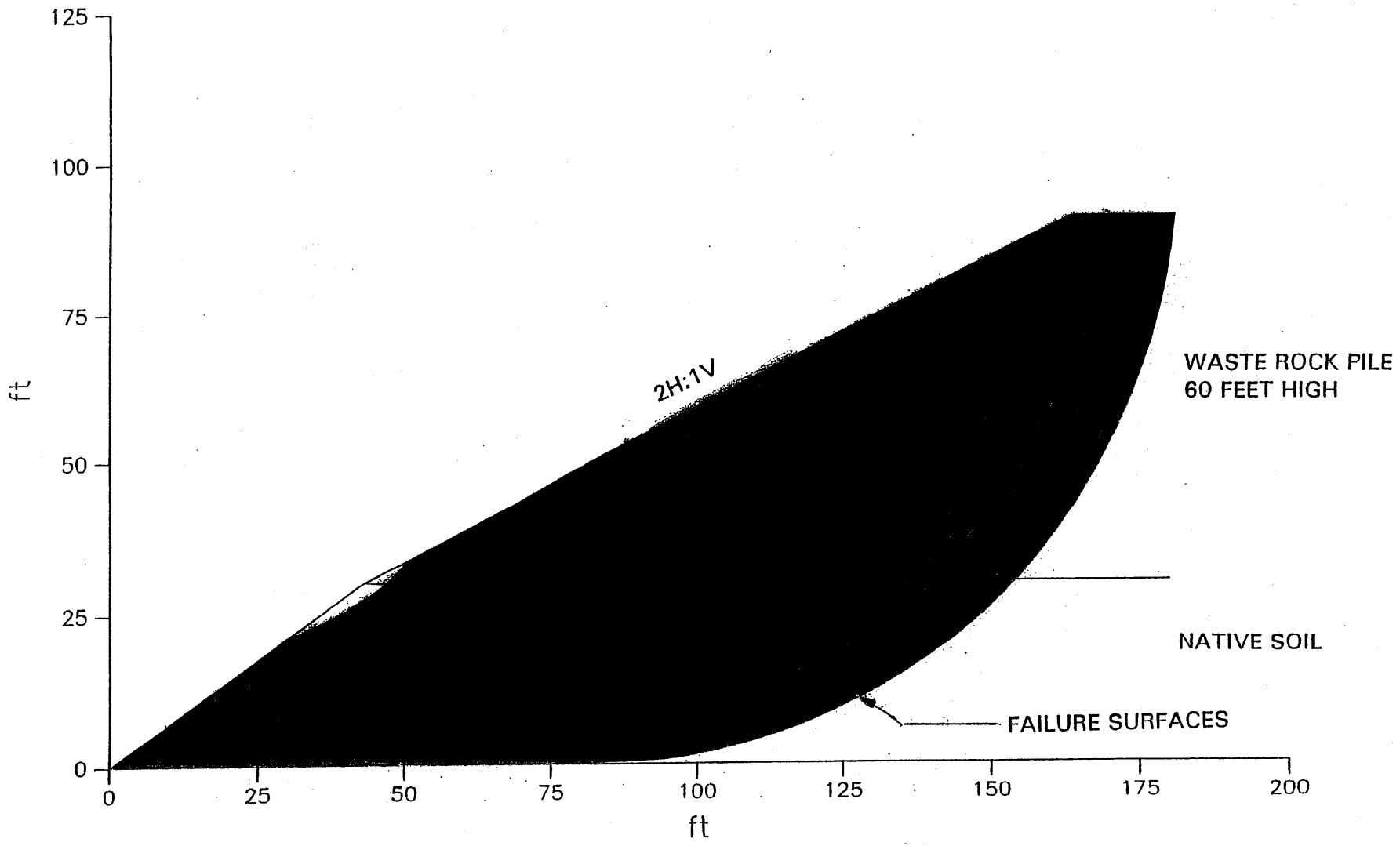

```
TITLE
DUGOUT CANYON MINE
PROPOSED WASTE-ROCK PILE
SECTION A-A', MANCOS SOIL, NATIVE SLOPE
PROFIL
4 3
0 0 43 30 2
43 30 163 90 1
163 90 180 90 1
43 30 180 30 2
SOIL
2
122 122 490 35 0 0 0
122 122 1360 33 0 0 0
CIRCL2
31 200 0 30 50 180 0 5 25 -35
END
```

```
*****************************************************************
*****                                                       *****
*****                    GeoSlope                           *****
*****                  Version 5.00                         *****
*****                                                       *****
*****   (c)1992 by GEOCOMP Corp, Concord, MA                *****
*****        Licensed to EarthFax Engineering               *****
*****                                                       *****
*****************************************************************
```

Problem Title : DUGOUT CANYON MINE
Description : PROPOSED WASTE-ROCK PILE
Remarks : SECTION A-A', MANCOS SOIL, NATIVE SLOPE

```
*****************************************************************
*****                                                       *****
*****                    INPUT DATA                         *****
*****                                                       *****
*****************************************************************
```

Profile Boundaries

Number of Boundaries: 4
Number of Top Boundaries: 3

Boundary No.	X-Left (ft)	Y-Left (ft)	X-Right (ft)	Y-Right (ft)	Soil Type Below Bnd
1	0.00	0.00	43.00	30.00	2
2	43.00	30.00	163.00	90.00	1
3	163.00	90.00	180.00	90.00	1
4	43.00	30.00	180.00	30.00	2

Soil Parameters

Number of Soil Types: 2

Soil Type No.	Total Unit Wt. (pcf)	Saturated Unit Wt. (pcf)	Cohesion Intercept (psf)	Friction Angle (deg)	Pore Pressure Param.	Pressure Constant (psf)	Piez. Surface No.
1	122.0	122.0	490.0	35.0	0.00	0.0	0
2	122.0	122.0	1360.0	33.0	0.00	0.0	0

****
***** TRIAL SURFACE GENERATION *****
****

Data for Generating Circular Surfaces

Number of Initiation Points:	31
Number of Surfaces From Each Point:	200
Left Initiation Point:	0.00 ft
Right Initiation Point:	30.00 ft
Left Termination Point:	50.00 ft
Right Termination Point:	180.00 ft
Minimum Elevation:	0.00 ft
Segment Length:	5.00 ft
Positive Angle Limit:	25.00 deg
Negative Angle Limit:	-35.00 deg

****
***** RESULTS *****
****

Critical Surfaces

No.	Safety Factor	Center X (ft)	Center Y (ft)	Circle Radius (ft)
1	2.387	-4.27	233.50	233.54
2	2.388	-6.73	238.39	238.49
3	2.389	-5.26	232.61	232.67
4	2.391	-8.87	241.03	241.19
5	2.392	-0.33	216.70	216.70
6	2.393	-0.13	227.00	226.30
7	2.393	-2.03	219.90	219.91
8	2.395	3.18	216.25	215.57
9	2.395	11.14	203.34	202.90
10	2.395	2.04	209.21	209.22

Bishop Circular Surfaces ● Most Critical Surfaces

Canyon Fuel Company, LLC
Dugout Canyon Mine
Waste Rock Pile
Section A-A'
6000 Failure Surfaces
File: WRA-WR.DAT

Minimum Factor of Safety : 2.271

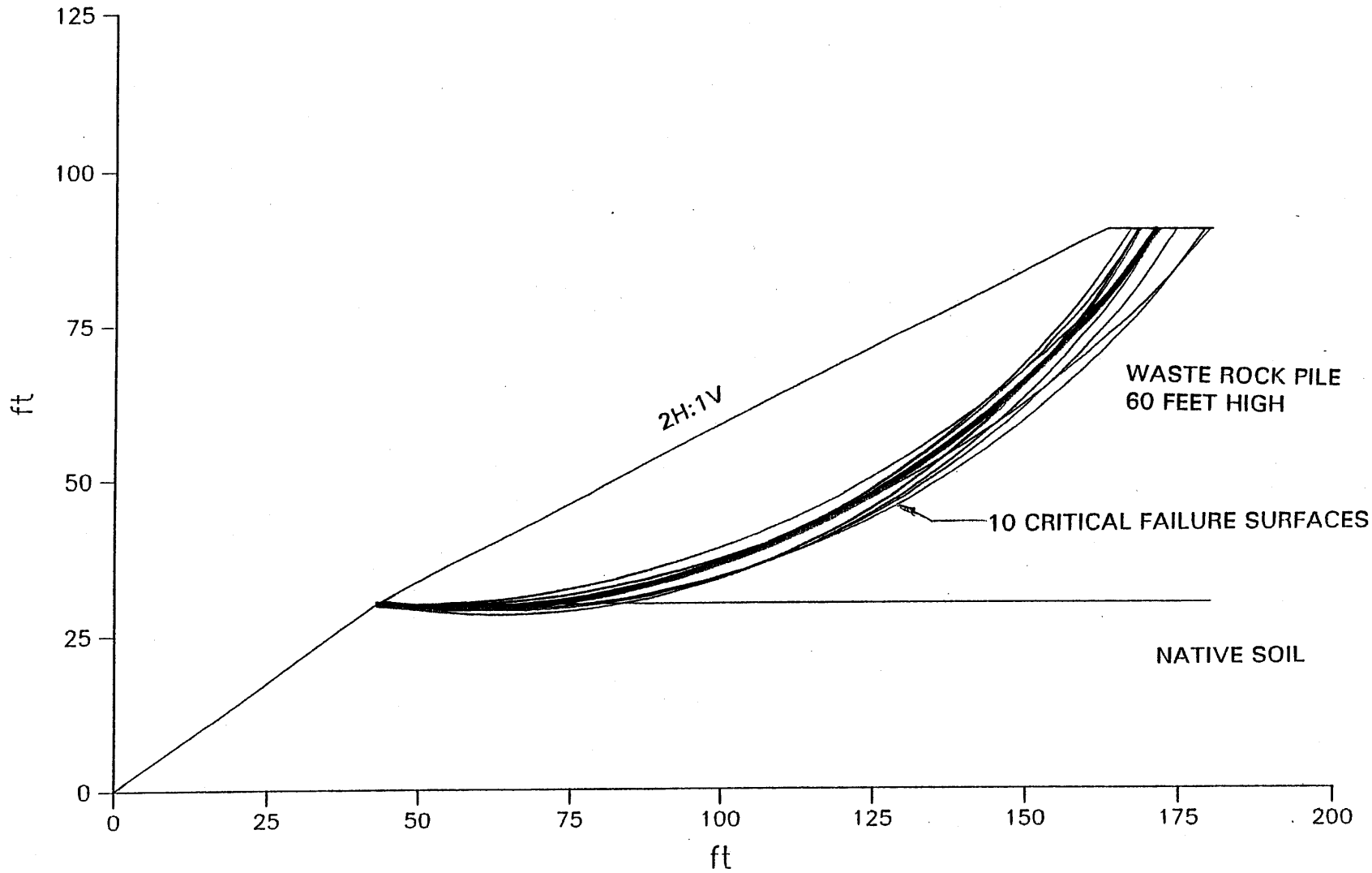

Bishop Circular Surfaces – Search for Critical Surfaces

Canyon Fuel Company, LLC
Dugout Canyon Mine
Waste Rock Pile
Section A-A'
6000 Failure Surfaces
File: WRA-WR.DAT

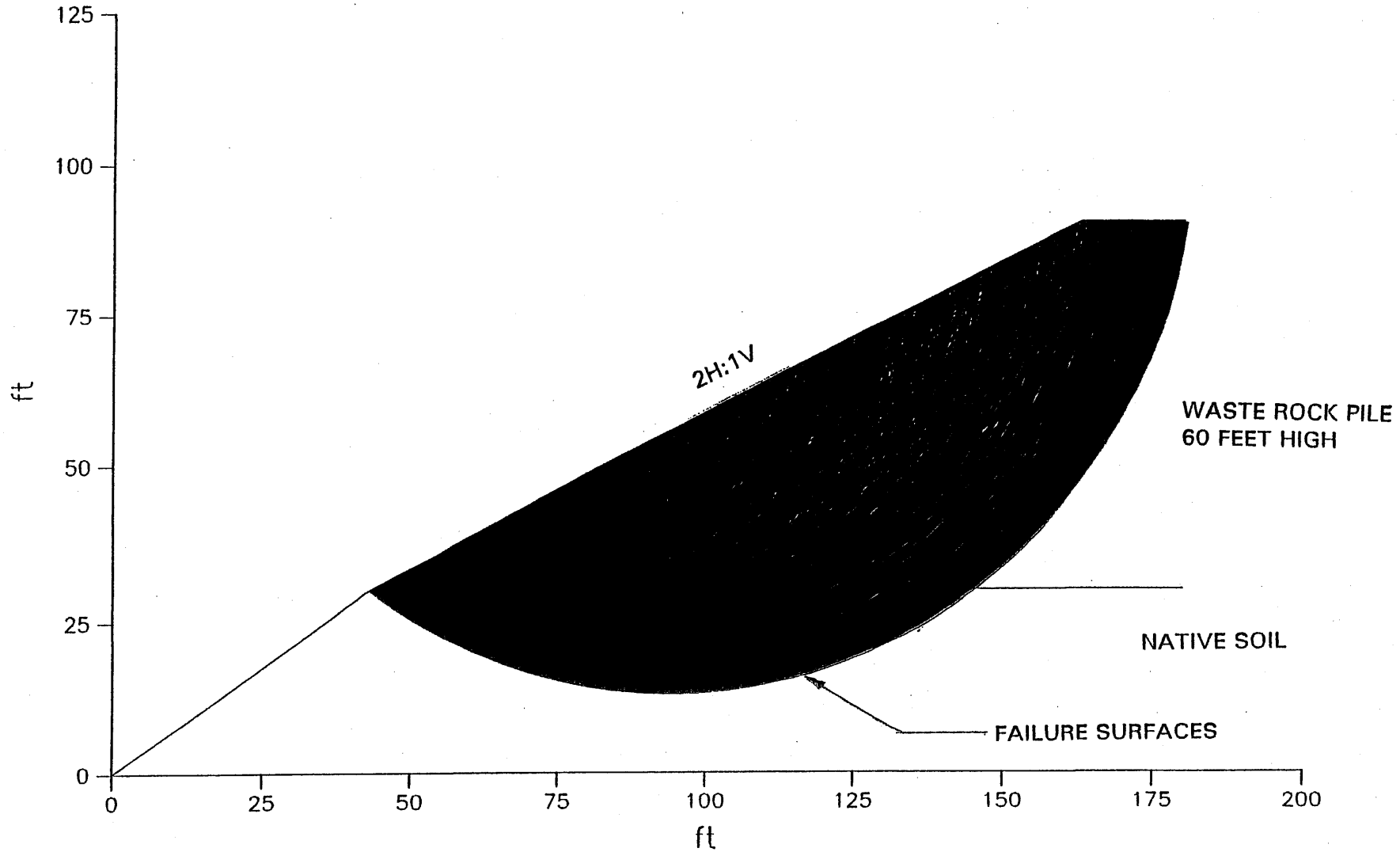

```
TITLE
DUGOUT CANYON MINE
PROPOSED WASTE-ROCK PILE
SECTION A-A', WASTE ROCK SLOPE ONLY
PROFIL
4 3
0 0 43 30 2
43 30 163 90 1
163 90 180 90 1
43 30 180 30 2
SOIL
2
122 122 490 35 0 0 0
122 122 0 43 0 0 0
CIRCL2
6 500 43 48 55 180 0 5 25 -35
END
```

```
*****************************************************************
*****                    GeoSlope                           *****
*****                  Version 5.00                         *****
*****                                                       *****
*****   (c)1992 by GEOCOMP Corp, Concord, MA                *****
*****     Licensed to EarthFax Engineering                  *****
*****************************************************************
```

Problem Title: DUGOUT CANYON MINE
Description: PROPOSED WASTE-ROCK PILE
Remarks: SECTION A-A', WASTE ROCK SLOPE ONLY

```
*****************************************************************
*****                    INPUT DATA                         *****
*****************************************************************
```

Profile Boundaries

Number of Boundaries: 4
Number of Top Boundaries: 3

Boundary No.	X-Left (ft)	Y-Left (ft)	X-Right (ft)	Y-Right (ft)	Soil Type Below Bnd
1	0.00	0.00	43.00	30.00	2
2	43.00	30.00	163.00	90.00	1
3	163.00	90.00	180.00	90.00	1
4	43.00	30.00	180.00	30.00	2

Soil Parameters

Number of Soil Types: 2

Soil Type No.	Total Unit Wt. (pcf)	Saturated Unit Wt. (pcf)	Cohesion Intercept (psf)	Friction Angle (deg)	Pore Pressure Param.	Pressure Constant (psf)	Piez. Surface No.
1	122.0	122.0	490.0	35.0	0.00	0.0	0
2	122.0	122.0	0.0	43.0	0.00	0.0	0

****
***** TRIAL SURFACE GENERATION *****
****

Data for Generating Circular Surfaces

Number of Initiation Points:	6
Number of Surfaces From Each Point:	500
Left Initiation Point:	43.00 ft
Right Initiation Point:	48.00 ft
Left Termination Point:	55.00 ft
Right Termination Point:	180.00 ft
Minimum Elevation:	0.00 ft
Segment Length:	5.00 ft
Positive Angle Limit:	25.00 deg
Negative Angle Limit:	-35.00 deg

****
***** RESULTS *****
****

Critical Surfaces

No.	Safety Factor	Center X (ft)	Center Y (ft)	Circle Radius (ft)
1	2.271	56.82	167.20	137.89
2	2.287	57.37	157.99	128.79
3	2.292	63.42	153.66	125.33
4	2.297	51.46	196.36	166.58
5	2.301	63.46	148.34	120.10
6	2.304	63.45	147.51	119.27
7	2.307	63.94	159.04	130.08
8	2.311	63.03	169.80	140.59
9	2.325	47.82	187.82	157.89
10	2.329	57.83	160.97	131.20

RA ATTACHMENT 5-3

REFUSE PILE VOLUME CALCULATIONS

REGISTERED PROFESSIONAL ENGINEER
2-11-05
No. 189797
LAYNE D.
JENSEN
STATE OF UTAH

Determination of Refuse Tonnage for Final Pile Configuration

The existing topography shown on the maps is representative of the site when the last aerial survey was conducted on August 12, 2004. At that time Olympus Aerial Surveys had estimated that 46,217 CY of coal refuse had already been placed at the site.

At the final pile configuration an additional 639,838 CY of coal waste will have been added to the refuse pile.

Total coal refuse in the pile = 46,217 CY + 639,838 CY = 686,055 CY

Unit weight of coal refuse = 110 lbs/ft^3

Tonnage = (686,055 CY * 27 ft^3/CY * 110 lbs/ft^3) / 2000 lbs/ft^3 = 1,018,792 tons

RA ATTACHMENT 5-4

WASTE ROCK ANALYSIS

Inter-Mountain Laboratories, Inc.

Report ID: 010501744

1673 Terra Avenue
Sheridan, WY 82801

Soil Analysis Report
Canyon Fuel Co
Dugout Mine
P.O. Box 1029
Wellington, UT 84542

Client Project ID: Dugout Canyon Mine
Date Received: 03/23/05

Set #0105S01744
Report Date: 04/08/05

Lab Id	Sample Id	pH	Saturation	EC @ 25°C	Calcium	Magnesium	Sodium	SAR	Sand	Silt	Clay	Texture
		s.u.	%	dS/m	meq/L	meq/L	meq/L		%	%	%	
0105S01744	12-3-04A	6.6	46.0	1.59	8.44	7.19	1.25	0.45	88.0	8.0	4.0	SAND
0105S01745	12-3-04B	6.9	46.1	1.68	8.49	7.01	1.15	0.41	84.0	12.0	4.0	LOAMY SAND
0105S01746	12-6-04A	7.0	41.4	1.80	9.31	7.77	1.25	0.43	86.0	10.0	4.0	LOAMY SAND
0105S01747	12-6-04B	6.7	40.0	1.98	10.7	8.98	1.45	0.46	84.0	10.0	6.0	LOAMY SAND
0105S01748	12-07-04A	6.8	42.9	2.04	11.2	9.19	1.16	0.36	87.0	9.0	4.0	LOAMY SAND
0105S01749	12-07-04B	6.9	43.1	1.86	9.94	8.10	1.07	0.35	88.0	8.0	4.0	SAND
0105S01750	12-9-04A	6.8	37.3	2.50	14.8	11.3	1.27	0.35	84.0	10.0	6.0	LOAMY SAND
0105S01751	12-9-04B	6.9	38.5	2.36	14.5	11.0	1.20	0.33	84.0	12.0	4.0	LOAMY SAND
0105S01752	12-16-04A	7.3	37.8	2.64	16.4	12.9	1.37	0.36	86.0	10.0	4.0	LOAMY SAND
0105S01753	12-16-04B	7.1	40.2	2.19	12.5	10.5	1.16	0.34	86.0	9.0	5.0	LOAMY SAND
0105S01754	12-29-04	7.1	39.7	1.56	6.96	7.39	1.31	0.49	86.0	10.0	4.0	LOAMY SAND
0105S01755	12-20-04A	7.2	37.3	2.01	11.5	9.52	1.11	0.34	84.0	12.0	4.0	LOAMY SAND
0105S01756	12-20-04B	7.1	37.6	2.35	14.3	11.3	1.26	0.35	86.0	10.0	4.0	LOAMY SAND
0105S01757	12-21-04A	6.9	40.6	1.89	10.0	8.89	1.14	0.37	87.0	9.0	4.0	LOAMY SAND
0105S01758	12-21-04B	7.2	37.6	1.87	10.1	8.93	1.12	0.36	84.0	12.0	4.0	LOAMY SAND

These results only apply to the samples tested.

Abbreviations for extractants: PE= Saturated Paste Extract, H20Sol= water soluble,AB-DTPA= Ammonium Bicarbonate-DTPA, AAO= Acid Ammonium Oxalate
Abbreviations used in acid base accounting: T.S.= Total Sulfur, AB= Acid Base, ABP= Acid Base Potential, PyrS= Pyritic Sulfur, Pyr+Org= Pyritic Sulfur + Organic Sulfur, Neut. Pot.= Neutralization Potential
Miscellaneous Abbreviations: SAR= Sodium Adsorption Ratio, CEC= Cation Exchange Capacity, ESP= Exchangeable Sodium Percentage

Reviewed By: _____
Joey Sheeley, Soils Lab Supervisor

Inter-Mountain Laboratories, Inc.

Report ID: 010501744

1673 Terra Avenue
Sheridan, WY 82801

Soil Analysis Report
Canyon Fuel Co
Dugout Mine
P.O. Box 1029
Wellington, UT 84542

Client Project ID: Dugout Canyon Mine
Date Received: 03/23/05

Set #0105S01744
Report Date: 04/08/05

Lab Id	Sample Id	Coarse Fragments %	Field Capacity %	Wilt Point %	Available Sodium meq/100g	Exchangeable Sodium meq/100g	Boron ppm	Nitrogen Nitrate ppm	Selenium ppm	TKN %
105S01744	12-3-04A	24.3	17.5	4.9	0.07	0.01	0.48	0.20	0.04	0.79
105S01745	12-3-04B	22.9	17.6	4.7	0.07	0.02	0.40	0.14	0.04	0.56
105S01746	12-6-04A	19.5	20.3	5.2	0.07	0.02	0.50	0.12	0.04	0.96
105S01747	12-6-04B	20.2	22.1	5.1	0.08	0.02	0.38	0.10	0.04	0.53
105S01748	12-07-04A	27.6	16.1	4.3	0.06	0.01	0.54	0.12	0.08	0.83
105S01749	12-07-04B	32.6	16.6	4.6	0.07	0.02	0.44	0.10	0.06	0.55
105S01750	12-9-04A	36.9	21.9	4.9	0.08	0.03	0.48	0.10	0.08	0.42
105S01751	12-9-04B	30.2	17.6	5.1	0.07	0.02	0.46	0.10	0.08	0.79
105S01752	12-16-04A	35.3	17.7	4.8	0.07	0.02	0.40	0.08	0.06	0.31
105S01753	12-16-04B	35.2	18.6	5.2	0.07	0.02	0.36	0.12	0.06	1.16
105S01754	12-29-04	14.7	22.1	4.6	0.08	0.03	0.42	0.08	0.02	0.39
105S01755	12-20-04A	30.6	19.2	4.7	0.07	0.03	0.26	0.06	0.04	0.67
105S01756	12-20-04B	32.4	17.8	4.7	0.07	0.02	0.36	0.08	0.04	0.59
105S01757	12-21-04A	33.1	20.0	4.7	0.08	0.03	0.36	0.10	0.04	0.40
105S01758	12-21-04B	31.1	18.5	4.7	0.07	0.03	0.42	0.08	0.04	0.86

These results only apply to the samples tested.

Abbreviations for extractants: PE= Saturated Paste Extract, H20Sol= water soluble,AB-DTPA= Ammonium Bicarbonate-DTPA, AAO= Acid Ammonium Oxalate
Abbreviations used in acid base accounting: T.S.= Total Sulfur, AB= Acid Base, ABP= Acid Base Potential, PyrS= Pyritic Sulfur, Pyr+Org= Pyritic Sulfur + Organic Sulfur, Neut. Pot.= Neutralization Potential
Miscellaneous Abbreviations: SAR= Sodium Adsorption Ratio, CEC= Cation Exchange Capacity, ESP= Exchangeable Sodium Percentage

Reviewed By: _____
Joey Sheeley, Soils Lab Supervisor

Inter-Mountain Laboratories, Inc.

Report ID: 010501744

1673 Terra Avenue
Sheridan, WY 82801

Soil Analysis Report
Canyon Fuel Co
Dugout Mine
P.O. Box 1029
Wellington, UT 84542

Client Project ID: Dugout Canyon Mine
Date Received: 03/23/05

Set #0105S01744
Report Date: 04/08/05

Lab Id	Sample Id	TOC %	Total Sulfur %	T.S. AB t/1000t	Neutral. Pot. t/1000t	T.S. ABP t/1000t
105S01744	12-3-04A	71.5	0.61	19.1	18.0	-1.06
105S01745	12-3-04B	70.1	0.64	20.0	18.2	-1.81
105S01746	12-6-04A	64.1	0.69	21.6	19.9	-1.67
105S01747	12-6-04B	62.7	0.69	21.6	20.5	-1.02
105S01748	12-07-04A	65.6	0.70	21.9	20.0	-1.83
105S01749	12-07-04B	64.2	0.71	22.2	21.6	-0.60
105S01750	12-9-04A	57.6	0.64	20.0	17.3	-2.71
105S01751	12-9-04B	56.0	0.65	20.3	18.6	-1.74
105S01752	12-16-04A	60.7	0.55	17.2	21.2	4.04
105S01753	12-16-04B	54.0	0.56	17.5	21.6	4.06
105S01754	12-29-04	51.5	0.52	16.2	31.2	15.0
105S01755	12-20-04A	51.9	0.56	17.5	21.2	3.66
105S01756	12-20-04B	51.8	0.56	17.5	20.3	2.78
105S01757	12-21-04A	52.7	0.55	17.2	32.3	15.1
105S01758	12-21-04B	52.2	0.50	15.6	31.4	15.8

These results only apply to the samples tested.

Abbreviations for extractants: PE= Saturated Paste Extract, H20Sol= water soluble,AB-DTPA= Ammonium Bicarbonate-DTPA, AAO= Acid Ammonium Oxalate
Abbreviations used in acid base accounting: T.S.= Total Sulfur, AB= Acid Base, ABP= Acid Base Potential, PyrS= Pyritic Sulfur, Pyr+Org= Pyritic Sulfur + Organic Sulfur, Neut. Pot.= Neutralization Potential
Miscellaneous Abbreviations: SAR= Sodium Adsorption Ratio, CEC= Cation Exchange Capacity, ESP= Exchangeable Sodium Percentage

Reviewed By: _____
Joey Sheeley, Soils Lab Supervisor

Inter-Mountain Laboratories, Inc.

1673 Terra Avenue
Sheridan, WY 82801

Report ID: 010501744

Soil Analysis Report
Canyon Fuel Co
Dugout Mine
P.O. Box 1029
Wellington, UT 84542

Client Project ID: Dugout Canyon Mine
Date Received: 03/23/05

Set #0105S01744
Report Date: 04/08/05

Lab Id	Sample Id	pH	Saturation	EC @ 25°C	Calcium	Magnesium	Sodium	SAR	Sand	Silt	Clay	Texture
		s.u.	%	dS/m	meq/L	meq/L	meq/L		%	%	%	
05S01759	12-22-04A	7.2	38.2	1.89	10.1	9.36	1.31	0.42	84.0	12.0	4.0	LOAMY SAND
05S01760	12-22-04B	7.3	39.5	1.88	9.21	9.00	1.27	0.42	84.0	12.0	4.0	LOAMY SAND
05S01761	1-4-05A	7.3	40.8	1.40	6.79	6.24	1.29	0.51	86.3	8.7	5.0	LOAMY SAND
05S01762	1-7-05A	7.6	40.1	2.54	17.0	11.2	1.38	0.37	90.0	6.0	4.0	SAND
05S01763	1-13-05A	7.5	36.4	2.40	14.5	11.7	1.76	0.49	87.0	9.0	4.0	LOAMY SAND
05S01764	1-14-05A	7.3	39.0	2.89	21.0	13.2	1.52	0.37	88.0	8.0	4.0	SAND
05S01765	1-15-05A	7.2	39.9	2.85	20.7	13.0	1.35	0.33	86.0	10.0	4.0	LOAMY SAND
05S01766	2-9-05A	7.5	43.1	1.26	4.60	5.58	1.67	0.74	84.0	12.0	4.0	LOAMY SAND
05S01767	2-10-05A	7.5	43.9	1.15	4.13	4.86	1.57	0.74	88.0	8.0	4.0	SAND
05S01768	2-11-05A	7.6	42.5	1.13	3.88	4.72	1.76	0.85	91.0	7.0	2.0	SAND
05S01769	2-28-05A	7.5	40.4	1.40	5.66	5.85	1.64	0.68	89.0	7.0	4.0	SAND
05S01770	3-1-05A	7.5	39.1	1.18	4.13	4.79	1.63	0.77	85.0	9.0	6.0	LOAMY SAND
05S01771	3-2-05A	7.4	36.9	1.69	5.58	7.10	1.82	0.72	83.0	11.0	6.0	LOAMY SAND
05S01772	3-3-05A	7.4	38.5	1.41	5.69	6.07	1.67	0.69	83.0	11.0	6.0	LOAMY SAND
05S01773	3-8-05A	7.7	40.0	1.09	3.15	4.13	2.11	1.11	85.0	9.0	6.0	LOAMY SAND

These results only apply to the samples tested.

Abbreviations for extractants: PE= Saturated Paste Extract, H20Sol= water soluble,AB-DTPA= Ammonium Bicarbonate-DTPA, AAO= Acid Ammonium Oxalate
Abbreviations used in acid base accounting: T.S.= Total Sulfur, AB= Acid Base, ABP= Acid Base Potential, PyrS= Pyritic Sulfur, Pyr+Org= Pyritic Sulfur + Organic Sulfur, Neut. Pot.= Neutralization Potential
Miscellaneous Abbreviations: SAR= Sodium Adsorption Ratio, CEC= Cation Exchange Capacity, ESP= Exchangeable Sodium Percentage

Reviewed By: _____
Joey Sheeley, Soils Lab Supervisor

Inter-Mountain Laboratories, Inc.

Report ID: 010501744

1673 Terra Avenue
Sheridan, WY 82801

Soil Analysis Report
Canyon Fuel Co
Dugout Mine
P.O. Box 1029
Wellington, UT 84542

Client Project ID: Dugout Canyon Mine
Date Received: 03/23/05

Set #0105S01744
Report Date: 04/08/05

Lab Id	Sample Id	Coarse Fragments %	Field Capacity %	Wilt Point %	Available Sodium meq/100g	Exchangeable Sodium meq/100g	Boron ppm	Nitrogen Nitrate ppm	Selenium ppm	TKN %
I05S01759	12-22-04A	10.4	19.0	4.6	0.07	0.02	0.48	0.16	0.04	0.40
I05S01760	12-22-04B	11.4	18.1	4.8	0.07	0.02	0.48	0.22	0.04	0.83
I05S01761	1-4-05A	4.6	20.1	5.3	0.11	0.06	0.52	0.12	0.02	0.48
I05S01762	1-7-05A	48.7	21.6	4.6	0.08	0.02	0.50	0.20	0.02	0.96
I05S01763	1-13-05A	6.1	22.8	5.1	0.08	0.02	0.50	0.16	0.04	0.28
I05S01764	1-14-05A	59.7	20.5	5.1	0.08	0.02	0.34	0.16	0.02	0.73
I05S01765	1-15-05A	60.9	19.2	5.5	0.07	0.02	0.40	0.14	0.02	0.74
I05S01766	2-9-05A	1.9	14.9	6.6	0.10	0.03	0.46	0.16	0.02	0.59
I05S01767	2-10-05A	2.8	23.8	6.3	0.09	0.02	0.38	0.16	0.02	0.64
I05S01768	2-11-05A	2.5	21.8	6.7	0.10	0.03	0.34	0.14	0.02	0.85
I05S01769	2-28-05A	3.8	21.6	6.9	0.10	0.03	0.44	0.24	0.02	0.54
I05S01770	3-1-05A	3.5	22.1	6.6	0.10	0.04	0.42	0.14	0.02	0.56
I05S01771	3-2-05A	3.1	21.8	6.9	0.10	0.03	0.48	0.16	0.02	0.89
I05S01772	3-3-05A	3.7	22.2	7.1	0.10	0.04	0.50	0.16	0.02	0.33
I05S01773	3-8-05A	3.7	19.8	7.4	0.12	0.04	0.66	0.20	0.02	0.42

hese results only apply to the samples tested.

.bbreviations for extractants: PE= Saturated Paste Extract, H20Sol= water soluble,AB-DTPA= Ammonium Bicarbonate-DTPA, AAO= Acid Ammonium Oxalate
.bbreviations used in acid base accounting: T.S.= Total Sulfur, AB= Acid Base, ABP= Acid Base Potential, PyrS= Pyritic Sulfur, Pyr+Org= Pyritic Sulfur + Organic Sulfur, Neut. Pot.= Neutralization Potential
liscellaneous Abbreviations: SAR= Sodium Adsorption Ratio, CEC= Cation Exchange Capacity, ESP= Exchangeable Sodium Percentage

teviewed By: _____
Joey Sheeley, Soils Lab Supervisor

Inter-Mountain Laboratories, Inc.

Report ID: 010501744

1673 Terra Avenue
Sheridan, WY 82801

Soil Analysis Report
Canyon Fuel Co
Dugout Mine
P.O. Box 1029
Wellington, UT 84542

Client Project ID: Dugout Canyon Mine
Date Received: 03/23/05

Set #0105S01744
Report Date: 04/08/05

Lab Id	Sample Id	TOC %	Total Sulfur %	T.S. AB t/1000t	Neutral. Pot. t/1000t	T.S. ABP t/1000t
105S01759	12-22-04A	53.5	0.53	16.6	26.9	10.4
105S01760	12-22-04B	52.7	0.55	17.2	26.7	9.52
105S01761	1-4-05A	61.9	0.49	15.3	20.7	5.42
105S01762	1-7-05A	60.7	0.54	16.9	25.2	8.31
105S01763	1-13-05A	49.3	0.48	15.0	38.1	23.1
105S01764	1-14-05A	57.5	0.53	16.6	28.5	11.9
105S01765	1-15-05A	57.7	0.55	17.2	27.1	9.90
105S01766	2-9-05A	67.1	0.54	16.9	18.0	1.10
105S01767	2-10-05A	72.9	0.51	15.9	18.1	2.16
105S01768	2-11-05A	71.5	0.52	16.2	14.3	-1.93
105S01769	2-28-05A	63.7	0.51	15.9	21.9	6.00
105S01770	3-1-05A	58.7	0.53	16.6	22.4	5.80
105S01771	3-2-05A	53.7	0.50	15.6	22.8	7.15
105S01772	3-3-05A	54.2	0.47	14.7	20.5	5.85
105S01773	3-8-05A	57.1	0.47	14.7	31.0	16.4

hese results only apply to the samples tested.

bbreviations for extractants: PE= Saturated Paste Extract, H20Sol= water soluble,AB-DTPA= Ammonium Bicarbonate-DTPA, AAO= Acid Ammonium Oxalate
bbreviations used in acid base accounting: T.S.= Total Sulfur, AB= Acid Base, ABP= Acid Base Potential, PyrS= Pyritic Sulfur, Pyr+Org= Pyritic Sulfur + Organic Sulfur, Neut. Pot.= Neutralization Potential
liscellaneous Abbreviations: SAR= Sodium Adsorption Ratio, CEC= Cation Exchange Capacity, ESP= Exchangeable Sodium Percentage

teviewed By: _____
Joey Sheeley, Soils Lab Supervisor

Inter-Mountain Laboratories, Inc.

Report ID: 010501744

1673 Terra Avenue
Sheridan, WY 82801

Soil Analysis Report
Canyon Fuel Co
Dugout Mine
P.O. Box 1029
Wellington, UT 84542

Client Project ID: Dugout Canyon Mine
Date Received: 03/23/05

Set #0105S01744
Report Date: 04/08/05

Lab Id	Sample Id	pH	Saturation	EC @ 25°C	Calcium	Magnesium	Sodium	SAR	Sand	Silt	Clay	Texture
		s.u.	%	dS/m	meq/L	meq/L	meq/L		%	%	%	
105S01774	3-9-05A	7.5	38.8	1.10	3.47	4.23	1.78	0.91	87.0	9.0	4.0	LOAMY SAND
105S01775	3-10-05A	7.6	39.2	1.13	3.31	4.10	2.11	1.09	80.0	14.0	6.0	LOAMY SAND
105S01776	3-11-05A	7.6	38.3	1.40	4.72	5.20	2.53	1.14	82.0	14.0	4.0	LOAMY SAND
105S01777	3-15-05A	7.8	41.0	0.73	1.73	2.00	1.91	1.40	86.0	10.0	4.0	LOAMY SAND

These results only apply to the samples tested.

Abbreviations for extractants: PE= Saturated Paste Extract, H20Sol= water soluble,AB-DTPA= Ammonium Bicarbonate-DTPA, AAO= Acid Ammonium Oxalate
Abbreviations used in acid base accounting: T.S.= Total Sulfur, AB= Acid Base, ABP= Acid Base Potential, PyrS= Pyritic Sulfur, Pyr+Org= Pyritic Sulfur + Organic Sulfur, Neut. Pot.= Neutralization Potential
Miscellaneous Abbreviations: SAR= Sodium Adsorption Ratio, CEC= Cation Exchange Capacity, ESP= Exchangeable Sodium Percentage

Reviewed By: _____
Joey Sheeley, Soils Lab Supervisor

Inter-Mountain Laboratories, Inc.

Report ID: 010501744

1673 Terra Avenue
Sheridan, WY 82801

Soil Analysis Report
Canyon Fuel Co
Dugout Mine
P.O. Box 1029
Wellington, UT 84542

Client Project ID: Dugout Canyon Mine
Date Received: 03/23/05

Set #0105S01744
Report Date: 04/08/05

Lab Id	Sample Id	Coarse Fragments %	Field Capacity %	Wilt Point %	Available Sodium meq/100g	Exchangeable Sodium meq/100g	Boron ppm	Nitrogen Nitrate ppm	Selenium ppm	TKN %
105S01774	3-9-05A	4.2	20.0	7.3	0.13	0.06	0.72	0.14	0.02	0.43
105S01775	3-10-05A	5.1	26.2	7.0	0.12	0.04	0.56	0.16	0.02	0.69
105S01776	3-11-05A	4.6	25.2	6.6	0.12	0.02	0.60	0.16	0.02	0.59
105S01777	3-15-05A	5.7	28.5	6.0	0.12	0.04	0.64	0.18	0.02	0.56

These results only apply to the samples tested.

Abbreviations for extractants: PE= Saturated Paste Extract, H20Sol= water soluble,AB-DTPA= Ammonium Bicarbonate-DTPA, AAO= Acid Ammonium Oxalate
Abbreviations used in acid base accounting: T.S.= Total Sulfur, AB= Acid Base, ABP= Acid Base Potential, PyrS= Pyritic Sulfur, Pyr+Org= Pyritic Sulfur + Organic Sulfur, Neut. Pot.= Neutralization Potential
Miscellaneous Abbreviations: SAR= Sodium Adsorption Ratio, CEC= Cation Exchange Capacity, ESP= Exchangeable Sodium Percentage

Reviewed By: _____
Joey Sheeley, Soils Lab Supervisor

Inter-Mountain Laboratories, Inc.

Report ID: 010501744

1673 Terra Avenue
Sheridan, WY 82801

Soil Analysis Report
Canyon Fuel Co
Dugout Mine
P.O. Box 1029
Wellington, UT 84542

Client Project ID: Dugout Canyon Mine
Date Received: 03/23/05

Set #0105S01744
Report Date: 04/08/05

Lab Id	Sample Id	TOC %	Total Sulfur %	T.S. AB t/1000t	Neutral. Pot. t/1000t	T.S. ABP t/1000t
105S01774	3-9-05A	56.5	0.49	15.3	23.7	8.38
105S01775	3-10-05A	54.9	0.48	15.0	20.4	5.42
105S01776	3-11-05A	58.6	0.50	15.6	22.4	6.79
105S01777	3-15-05A	67.5	0.52	16.2	14.1	-2.19

hese results only apply to the samples tested.

bbreviations for extractants: PE= Saturated Paste Extract, H20Sol= water soluble,AB-DTPA= Ammonium Bicarbonate-DTPA, AAO= Acid Ammonium Oxalate
bbreviations used in acid base accounting: T.S.= Total Sulfur, AB= Acid Base, ABP= Acid Base Potential, PyrS= Pyritic Sulfur, Pyr+Org= Pyritic Sulfur + Organic Sulfur, Neut. Pot.= Neutralization Potential
liscellaneous Abbreviations: SAR= Sodium Adsorption Ratio, CEC= Cation Exchange Capacity, ESP= Exchangeable Sodium Percentage

Reviewed By: _____
Joey Sheeley, Soils Lab Supervisor

Inter-Mountain Laboratories, Inc.

Report ID: 010501744

1673 Terra Avenue
Sheridan, WY 82801

Soil Analysis Report
Canyon Fuel Co
Dugout Mine
P.O. Box 1029
Wellington, UT 84542

Client Project ID: Dugout Canyon Mine
Date Received: 03/23/05

Set #0105S01744
Report Date: 04/08/05

Lab Id	Sample Id	pH	Saturation	EC @ 25°C	Calcium	Magnesium	Sodium	SAR	Sand	Silt	Clay	Texture
		s.u.	%	dS/m	meq/L	meq/L	meq/L		%	%	%	
)105S01761	1-4-05A	7.3	40.8	1.40	6.79	6.24	1.29	0.51	86.3	8.7	5.0	LOAMY SAND
)105S01761D	1-4-05A	7.1	37.9	1.70	8.34	7.48	1.49	0.53	85.0	12.5	2.5	LOAMY SAND
)105S01770	3-1-05A	7.5	39.1	1.18	4.13	4.79	1.63	0.77	85.0	9.0	6.0	LOAMY SAND
)105S01770D	3-1-05A	7.5	38.6	1.07	3.64	4.24	1.47	0.74	89.0	5.0	6.0	SAND
)105S01772	3-3-05A	7.4	38.5	1.41	5.69	6.07	1.67	0.69	83.0	11.0	6.0	LOAMY SAND
)105S01772D	3-3-05A	7.5	41.2	1.16	4.51	4.68	1.35	0.63	85.0	9.0	6.0	LOAMY SAND
)105S01774	3-9-05A	7.5	38.8	1.10	3.47	4.23	1.78	0.91	87.0	9.0	4.0	LOAMY SAND
)105S01774D	3-9-05A	7.5	40.7	0.96	2.83	3.43	1.49	0.84	87.0	7.0	6.0	LOAMY SAND

These results only apply to the samples tested.

Abbreviations for extractants: PE= Saturated Paste Extract, H20Sol= water soluble,AB-DTPA= Ammonium Bicarbonate-DTPA, AAO= Acid Ammonium Oxalate
Abbreviations used in acid base accounting: T.S.= Total Sulfur, AB= Acid Base, ABP= Acid Base Potential, PyrS= Pyritic Sulfur, Pyr+Org= Pyritic Sulfur + Organic Sulfur, Neut. Pot.= Neutralization Potential
Miscellaneous Abbreviations: SAR= Sodium Adsorption Ratio, CEC= Cation Exchange Capacity, ESP= Exchangeable Sodium Percentage

Reviewed By: _____
Joey Sheeley, Soils Lab Supervisor

Inter-Mountain Laboratories, Inc.

Report ID: 010501744

1673 Terra Avenue
Sheridan, WY 82801

Soil Analysis Report
Canyon Fuel Co
Dugout Mine
P.O. Box 1029
Wellington, UT 84542

Client Project ID: Dugout Canyon Mine
Date Received: 03/23/05

Set #0105S01744
Report Date: 04/08/05

Lab Id	Sample Id	Coarse Fragments %	Field Capacity %	Wilt Point %	Available Sodium meq/100g	Exchangeable Sodium meq/100g	Boron ppm	Nitrogen Nitrate ppm	Selenium ppm	TKN %
105S01761	1-4-05A	4.6	20.1	5.3	0.11	0.06	0.52	0.12	0.02	0.48
105S01761D	1-4-05A		22.1	5.1	0.11	0.05	0.56	0.12	0.02	0.33
105S01770	3-1-05A	3.5	22.1	6.6	0.10	0.04	0.42	0.14	0.02	0.56
105S01770D	3-1-05A		20.9	6.1	0.09	0.03	0.50	0.16	0.02	0.38
105S01772	3-3-05A	3.7	22.2	7.1	0.10	0.04	0.50	0.16	0.02	0.33
105S01772D	3-3-05A		18.6	6.1	0.08	0.02	0.58	0.18	0.02	0.54
105S01774	3-9-05A	4.2	20.0	7.3	0.13	0.06	0.72	0.14	0.02	0.43
105S01774D	3-9-05A		16.9	6.7	0.12	0.06	0.52	0.20	0.02	0.36

These results only apply to the samples tested.

Abbreviations for extractants: PE= Saturated Paste Extract, H20Sol= water soluble,AB-DTPA= Ammonium Bicarbonate-DTPA, AAO= Acid Ammonium Oxalate
Abbreviations used in acid base accounting: T.S.= Total Sulfur, AB= Acid Base, ABP= Acid Base Potential, PyrS= Pyritic Sulfur, Pyr+Org= Pyritic Sulfur + Organic Sulfur, Neut. Pot.= Neutralization Potential
Miscellaneous Abbreviations: SAR= Sodium Adsorption Ratio, CEC= Cation Exchange Capacity, ESP= Exchangeable Sodium Percentage

Reviewed By: _____
Joey Sheeley, Soils Lab Supervisor

Inter-Mountain Laboratories, Inc.

Report ID: 010501744

1673 Terra Avenue
Sheridan, WY 82801

Soil Analysis Report
Canyon Fuel Co
Dugout Mine
P.O. Box 1029
Wellington, UT 84542

Client Project ID: Dugout Canyon Mine
Date Received: 03/23/05

Set #0105S01744
Report Date: 04/08/05

Lab Id	Sample Id	TOC %	Total Sulfur %	T.S. AB t/1000t	Neutral. Pot. t/1000t	T.S. ABP t/1000t
0105S01761	1-4-05A	61.9	0.49	15.3	20.7	5.42
0105S01761D	1-4-05A	59.2	0.49	15.3	22.6	7.34
0105S01770	3-1-05A	58.7	0.53	16.6	22.4	5.80
0105S01770D	3-1-05A	58.1	0.53	16.6	22.1	5.59
0105S01772	3-3-05A	54.2	0.47	14.7	20.5	5.85
0105S01772D	3-3-05A	54.2	0.45	14.1	21.0	6.93
0105S01774	3-9-05A	56.5	0.49	15.3	23.7	8.38
0105S01774D	3-9-05A	56.9	0.49	15.3	23.2	7.93

These results only apply to the samples tested.

Abbreviations for extractants: PE= Saturated Paste Extract, H20Sol= water soluble,AB-DTPA= Ammonium Bicarbonate-DTPA, AAO= Acid Ammonium Oxalate
Abbreviations used in acid base accounting: T.S.= Total Sulfur, AB= Acid Base, ABP= Acid Base Potential, PyrS= Pyritic Sulfur, Pyr+Org= Pyritic Sulfur + Organic Sulfur, Neut. Pot.= Neutralization Potential
Miscellaneous Abbreviations: SAR= Sodium Adsorption Ratio, CEC= Cation Exchange Capacity, ESP= Exchangeable Sodium Percentage

Reviewed By: _____
Joey Sheeley, Soils Lab Supervisor

CHAPTER 7

HYDROLOGY

TABLE OF CONTENTS

Section — Page

CHAPTER 7 7-1

710 INTRODUCTION 7-1
- 711 General Requirements 7-1
- 712 Certification 7-1
- 713 Inspection 7-1

720 ENVIRONMENTAL DESCRIPTION 7-2

- 721 General Requirements 7-2
- 722 Cross Sections and Maps 7-2
  - 722.100 Location and Extent of Subsurface Water 7-2
  - 722.200 Location of Surface Water Bodies 7-2
  - 722.300 Locations of Monitoring Stations 7-2
  - 722.400 Location and Depth of Water Wells 7-2
  - 722.500 Surface Topography 7-3
- 723 Sampling and Analysis 7-3
- 724 Baseline Information 7-3
  - 724.100 Groundwater Information 7-3
  - 724.200 Surface Water Information 7-4
  - 724.300 Geologic Information 7-5
  - 724.400 Climatological Information 7-5
  - 724.500 Supplemental Information 7-5
  - 724.600 Survey of Renewable Resource Lands 7-5
  - 724.700 Alluvial Valley Floor Requirements 7-5
- 725 Baseline Cumulative Impact Area Information 7-6
- 726 Modeling 7-6
- 727 Alternative Water Source Information 7-6
- 728 Probable Hydrologic Consequences 7-6
  - 728.100 Potential Impacts to Surface and Groundwater 7-6
  - 728.200 Baseline Hydrologic and Geologic Information 7-7
  - 728.300 PHC Determination 7-7
- 729 Cumulative Hydrologic Impact Assessment (CHIA) 7-8

730 OPERATION PLAN 7-9

- 731 General Requirements 7-9
  - 731.100 Hydrologic-Balance Protection 7-9
  - 731.200 Water Monitoring 7-10

TABLE OF CONTENTS (Continued)

731.300 Acid- and Toxic-Forming Materials 7-11
731.400 Transfer of Wells 7-11
731.500 Discharges 7-12
731.600 Stream Buffer Zones 7-12
731.700 Cross Sections and Maps 7-12
731.800 Water Rights and Replacement 7-12
732 Sediment Control Measures 7-12
732.100 Siltation Structures 7-13
732.200 Sedimentation Ponds 7-13
732.300 Diversions 7-14
732.400 Road Drainage 7-15
733 Impoundments 7-15
733.100 General Plans 7-15
733.200 Permanent and Temporary Impoundments 7-16
734 Discharge Structures 7-16
735 Disposal of Excess Spoil 7-17
736 Coal Mine Waste 7-17
737 Noncoal Mine Waste 7-17
738 Temporary Casing and Sealing of Wells 7-17

740 DESIGN CRITERIA AND PLANS 7-17

741 General Requirements 7-17
742 Sediment Control Measures 7-18
742.100 General Requirements 7-18
742.200 Siltation Structures 7-18
742.300 Diversions 7-21
742.400 Road Drainage 7-23
743 Impoundments 7-24
744 Discharge Structures 7-24
745 Disposal of Excess Spoil 7-24
746 Coal Mine Waste 7-24
746.100 General Requirements 7-24
746.200 Refuse Piles 7-24
746.300 Impounding Structures 7-25
746.400 Return of Coal Processing Waste to Abandoned Underground Workings 7-25
747 Disposal of Noncoal Mine Waste 7-25
748 Casing and Sealing of Wells 7-25

750 PERFORMANCE STANDARDS 7-25

TABLE OF CONTENTS (Continued)

751 Water Quality Standards and Effluent Limitations 7-26
752 Sediment Control Measures 7-26
752.100 Siltation Structures and Diversions 7-26
752.200 Road Drainage 7-26
753 Impoundments and Discharge Structures 7-26
754 Disposal of Excess Spoil, Coal Mine Waste and Noncoal Mine Waste 7-27
755 Casing and Sealing of Wells 7-27

760 RECLAMATION 7-27

761 General Requirements 7-27
762 Roads 7-27
762.100 Restoring the Natural Drainage Patterns 7-27
762.200 Reshaping Cut and Fill Slopes 7-29
763 Siltation Structures 7-29
763.100 Maintenance of Siltation Structures 7-29
763.200 Removal of Siltation Structures 7-29
764 Structure Removal 7-29
765 Permanent Casing and Sealing of Wells 7-29

LIST OF FIGURES

RA Figure 7-1 Potentiometric Surface 7-31

LIST OF TABLES

RA Table 7-3 Diversion Design Summary 7-34
RA Table 7-4 Culvert Design Summary 7-35

LIST OF ATTACHMENTS

RA Attachment 7-1 Baseline Data
RA Attachment 7-2 Sediment Pond Design Calculations
RA Attachment 7-3 Topsoil/Subsoil Stockpile Sediment Control
RA Attachment 7-4 Diversion and Culvert Design Calculations
RA Attachment 7-5 Climatological Information
RA Attachment 7-6 Soldier Canyon Mine Plate 7-1

LIST OF PLATES

RA Plate 7-1 Drainages, Sediment Control Structures and Sampling Locations
RA Plate 7-2 As-Built Sediment Pond Details
RA Plate 7-3 Reclaimed Drainages and Watersheds

CHAPTER 7

HYDROLOGY

710 INTRODUCTION

711 General Requirements

This chapter presents a description of:

Proposed operations and the potential impacts to the hydrologic balance;

Methods of compliance with design criteria and the calculations utilized to show compliance; and

Applicable hydrologic performance standards.

712 Certification

A qualified, registered professional engineer has certified all maps, plans, and cross sections presented in this chapter.

713 Inspection

Refer to the approved M&RP

720 ENVIRONMENTAL DESCRIPTION

721 General Requirements

This section presents a description of the pre-mining hydrologic resources within the permit and adjacent areas that may be affected or impacted by the proposed coal mining and reclamation operation.

Reference RA Attachment 2-3 for soil information, pictures and drawings and RA Attachment 7-3, Addendum A for hydrologic information pertaining to the soil borrow area to be used for reclamation of the refuse pile.

722 Cross Sections and Maps

722.100 Location and Extent of Subsurface Water

No seeps or springs are present in the immediate area of the refuse pile site. Three monitoring wells were installed in the site area (see RA Plate 7-1). The completion details of these wells are discussed in Chapter 6, RA Attachment 6-1of this submittal.

722.200 Location of Surface Water Bodies

Dugout Creek is located to the east of the refuse pile between an 1/8 and 1/4 of a mile. Due to the distance to the creek, no impact to this stream is anticipated.

722.300 Locations of Monitoring Stations

Two surface water monitoring stations have been located for the refuse pile area (see RA Plate 7-1). These stations are discussed in Section 731 of this submittal.

722.400 Location and Depth of Water Wells

No water-supply wells exist in the refuse pile area.

722.500 Surface Topography

Surface topographic features in the permit and adjacent areas are shown on the base map used for RA Plate 7-1.

723 Sampling and Analysis

Refer to the approved M&RP.

724 Baseline Information

Baseline information for Dugout Creek is presented in the approved M&RP. Baseline data for the sampling of the groundwater and surface water stations are presented in RA Attachment 7-1.

724.100 Groundwater Information

Mancos Shale. The refuse pile area is located on the Mancos Shale. The relatively impermeable marine shale is not considered to be a regional or local aquifer. Groundwater samples collected from four monitoring wells (MW-1M, MW-2M, MW-3M and MW-1C) located approximately 2 miles south of Soldier Canyon Mine (see Plate 7-1, RA Attachment 7-6) have a mean TDS concentration of approximately 10,000 mg/l and are of the sodium-sulfate-chloride type (Appendix 7-3 of the approved M&RP). Chemical compositions are consistent with the dissolution of halite and gypsum as well as cation exchange. While it is anticipated that the water quality within the Mancos Shale in the Soldier Canyon Mine area is similar to the waste rock site, samples will be obtained from DH-

1 beginning in the first quarter of 2003. Water samples from this drill hole will be analyzed for the parameters listed in Table 7-4 of the existing M&P.

Recharge and Discharge Relations. Recharge to the Mancos Shale within the refuse pile area would be minimal since the formation is relatively impermeable, the refuse pile area is limited to only a few acres, and the refuse pile area is not located within a known recharge area.

Depth to Groundwater. Water level measurements from the three monitoring wells located on or immediately adjacent to the refuse pile site indicate that water is found at a depth ranging from 35 to 90 feet below ground surface. The water is originating either from the Mancos Shale or from the Alluvium/ Mancos Shale contact. It took approximately one month for the water levels in the wells to stabilize, indicating a very low permeability for the formation. The direction of groundwater flow is to south toward Dugout Creek (see RA Figure 7-1).

724.200 Surface Water Information

The refuse pile area exists entirely within the Dugout Creek watershed. Based on field observations, Dugout Creek is considered to be intermittent in this area. Several smaller tributaries to the creek in the area are ephemeral. No gauging stations are located within the immediate area of the refuse pile. The disturbance associated with the construction of the refuse pile is not anticipated to significantly increase or decrease runoff to Dugout Creek (Appendix 7-9, Addendum A).

Two baseline surface water monitoring stations have been located in the ephemeral drainage to the southwest of the refuse pile. Data from these stations is presented in RA Attachment 7-1. No flow has been identified in the drainage through during the period of monitoring (August 2002).

724.300 Geologic Information

Geologic information related to the refuse pile area and adjacent areas is presented in Chapter 6 of this submittal and the approved M&RP.

724.400 Climatological Information

Climatological data are summarized in Appendix 4-1 of the approved M&RP and in RA Attachment 7-5.

724.500 Supplemental Information

All information pertinent to a determination of the probable hydrologic consequences of the constructing, maintaining, and reclaiming of the proposed refuse pile are presented in both this submittal and the approved M&RP.

724.600 Survey of Renewable Resource Lands

The existence and recharge of groundwater systems in the refuse pile and adjacent areas is discussed in Section 724.100 of this submittal and the approved M&RP.

724.700 Alluvial Valley Floor Requirements

Information regarding the presence or absence of alluvial valley floors in the permit and adjacent areas is presented in Chapter 9 of the approved M&RP and this submittal.

725 Baseline Cumulative Impact Area Information

The hydrologic and geologic information required for the Division to develop a Cumulative Hydrologic Impact Assessment is presented in the approved M&RP and this submittal under Chapters 6 and 7. Required information not available in these chapters is available from the Utah Divisions of Water Rights and Water Resources and from the U.S. Geological Survey and the U.S. Bureau of Land Management.

726 Modeling

No numerical groundwater or surface water modeling was conducted in support of this submittal.

727 Alternative Water Source Information

No surface mining will be conducted in this area and adjacent areas. Therefore, this section does not apply.

728 Probable Hydrologic Consequences

This section addresses the probable hydrologic consequences of construction and reclamation operations in the refuse pile area. Mitigating measures are discussed generally in this section and in detail in Section 730 of the approved M&RP.

728.100 Potential Impacts to Surface and Groundwater

Potential impacts of storing refuse and materials in this area on the quality and quantity of surface and groundwater flow may include:

Contamination from acid- or toxic- forming materials;
Increased sediment yield from disturbed areas;

Increased total dissolved solids concentrations;

Impacts to groundwater or surface water availability;

Hydrocarbon contamination from the use of hydrocarbons in the refuse pile area; and

Contamination of surface and groundwater from road salting activities.

These potential impacts are addressed in the following sections and in the approved M&RP.

728.200 Baseline Hydrologic and Geologic Information

Baseline geologic information is presented in Chapter 6 of the approved M&RP and this submittal. Baseline hydrologic information is presented in Sections 724.100 and 724.200 of the approved M&RP.

728.300 PHC Determination

Potential Impacts to the Hydrologic Balance. Potential impacts of the Dugout Canyon Mine on the hydrologic balance of the refuse pile and adjacent areas are addressed in the following subsections of this submittal and the approved M&RP.

Acid- or Toxic- Forming Materials. No acid- or toxic-forming materials have been identified in the soils or strata of the Dugout Canyon Mine (Chapter 6 of the approved M&RP). Canyon Fuel commits to sampling any refuse materials generated by the mine in accordance with the approved M&RP to aid in identifying any acid- or toxic-forming materials. Thus, no significant potential exists for the contamination of surface and groundwater in the refuse pile and adjacent areas by acid- or toxic-forming materials. In the event that acid- or toxic-forming materials are identified, this material will be buried with a minimum of 4 feet of non-acid, non-toxic, non-combustible materials.

Sediment Yield. The potential impact of construction, maintenance, and reclamation of the refuse pile on sediment yield is an increase in sediment in the surface waters downstream from disturbed

areas. Sediment-control measures (such as diversions, sediment pond, straw bales, etc.) will be installed to minimize this impact. These facilities will be regularly inspected (see Section 514 of the M&RP) and maintained to ensure that they remain in proper operating condition.

Various sediment-control measures will be implemented during reclamation as the vegetation becomes established. As discussed in Section 542.200 of this submittal, these measures will include maintenance of sediment pond, berms, and diversions in appropriate locations to minimize potential contributions of sediment to Dugout Creek and off-site areas. These measures will reduce the amount of erosion from the reclaimed areas, thereby precluding adverse impacts to the environment.

Once vegetation is adequately established, the berms will be pushed into the diversion ditches and revegetated in accordance with Chapter 2 and 3 of this submittal. Additionally, the sediment pond embankment will be breached and the outlet works of the sediment pond will be removed, thereby ensuring a positive drainage from the site area.

Acidity, Total Suspended Solids, and Total Dissolved Solids. Probable impacts of mining and reclamation operations on the acidity and total suspended solids concentrations of surface and groundwater in the permit and adjacent areas were addressed previously in this section.

Groundwater and Surface Water Availability. Construction, maintenance, and reclamation of the refuse pile will not affect groundwater and surface water availability. As discussed previously, the refuse pile is of limited areal extent, is located on the Mancos Shale, and does not significantly affect surface runoff.

Potential Hydrocarbon Contamination. Diesel fuel, oils, greases, and other hydrocarbon products will not be stored at the site. Fuels, greases and other oils may leak from equipment during construction operations. These spills will be handled as specified in the approved M&RP.

Road Salting. No salting of roads will occur within the refuse pile area. Hence, this impact is not a significant concern.

729 Cumulative Hydrologic Impact Assessment (CHIA)

A Cumulative Hydrologic Impact Assessment to include the permit and adjacent areas is to be prepared by the Division.

730 OPERATION PLAN

731 General Requirements

731.100 Hydrologic-Balance Protection

Groundwater Protection. The affect on groundwater in this area is expected to be minimal as discussed in Section 724.200. Groundwater will not be encountered or used during construction, maintenance, and reclamation of the refuse pile. The three wells that have been drilled in this area are used to aid in monitoring the potential impacts of the refuse pile.

Surface Water Protection. To protect the hydrologic balance, construction, maintenance, and reclamation operations will be conducted to handle earth materials and runoff in a manner that prevents, to the extent possible, additional contributions of suspended solids to streamflow outside the permit area, and otherwise prevents water pollution. Additionally, CFC will maintain adequate runoff- and sediment-control facilities to protect local surface waters.

During initial construction and prior to installation of all runoff- and sediment-control facilities, silt fences were installed along the down gradient edge of the refuse pile area. These silt fences were installed in accordance with the approved M&RP. If required for control of local erosion, straw-bale dikes may also be installed at the site during initial construction. The silt fences and straw-bale

dikes will be periodically inspected, and accumulated sediment will be removed as needed to maintain functionality. Once the diversion ditches are installed, the silt fences and straw-bale dikes will be removed.

The initial placement of waste rock will take place in an area lower than the existing surrounding grade. The operator will construct the appropriate ditches adjacent to and upstream of the growing pile once the surface of the pile meets and exceeds the level of the surrounding existing ground surface. Prior to construction of the ditches, a temporary interim berm will be constructed upstream of the below-grade storage area to divert water to the sediment pond (RA Plate 7-1)

Once the runoff- and sediment-control facilities outlined in Section 732 have been installed, these structures will prevent additional contributions of suspended solids to streamflow outside the permit area. A description of sediment control following reclamation is presented in Sections 540 and 760 of this submittal and the approved M&RP.

Reference RA Attachment 7-3, Addendum A for hydrologic information pertaining to the soil borrow area.

731.200 Water Monitoring

Groundwater Monitoring. Groundwater monitoring associated with the refuse pile will include quarterly water level measurements. In accordance with Table 7-4, Groundwater Monitoring Program of the approved M&RP, Wells DH-1, DH-2 and DH-3 will be monitored using Protocols A, 1. Water quality samples will be obtained quarterly from DH-1 beginning in the first quarter of 2003 and ending the 4th quarter of 2004. Thereafter, a water quality sample from DH-1 will be taken annually, until bond release. The samples from DH-1 will be analyzed for the parameters listed in Table 7-4, "Groundwater Monitoring Program". At least one borehole volume of water will be removed from the well prior to obtaining the water sample for analysis. Water level data collected through the first quarter of 2002 are presented in RA Attachment 7-1.

Should the subsoil stockpile be moved to the area of Well DH-2, the casing will be elevated above the stockpile to allow for continued monitoring (RA Plate 7-1).

Surface Water Monitoring. Two surface water monitoring sites are located in the refuse pile area (see RA Plate 7-1). These stations are located on the ephemeral drainage to the west and southwest of the pile. One point is located upstream of the pile, while the second point is located downstream of the site at the county road crossing. These stations are monitored to evaluate surface-water conditions upstream and downstream from the pile. The stations will be monitored in accordance with the schedule and protocols established in the approved M&RP. In accordance with Table 7-5, Surface Water Monitoring Program of the approved M&RP, Surface Water Monitoring Sites SS-1 and SS-2 are monitored using Protocol 1. Data collected through the third quarter of 2002 are presented in RA Attachment 7-1.

731.300 Acid- and Toxic-Forming Materials

Acid- or toxic forming materials are not expected to be produced from the mine. CFC commits to monitor all materials produced and analyze them for acid- or toxic-forming materials. If any materials are identified, they will be placed in the refuse pile and covered with a minimum of 4 feet of non-acid, non-toxic, non-combustible materials. Copies of the toxicity/acid-base results from the samples collected at the Dugout Canyon Mine are presented in RA Attachment 5-4 and Appendix 5-7 of the approved M&RP.

731.400 Transfer of Wells

The three ground water monitoring wells, which exist at the site, will be abandoned following the reclamation of the site when no longer required for ground water monitoring. Therefore, no well transfers are required.

731.500 Discharges

No mines are located in the refuse pile area, thus no discharges to mines is possible.

731.600 Stream Buffer Zones

The refuse pile for the Dugout Canyon Mine will not be constructed within 100 feet of a perennial stream.

Stream Channel Diversions. No stream channel diversions are planned for this site.

Buffer Zone Designation. No buffer zone designation is necessary at this site.

731.700 Cross Sections and Maps

RA Plate 7-1 shows the location of each monitoring station and the watershed boundaries for the area watersheds. RA Plate 7-1 shows the proposed location of the diversion ditches and culverts and sediment pond associated with the refuse pile area. RA Plate 7-2 presents the design details of the sediment pond with appropriate cross sections of the pond and embankment.

731.800 Water Rights and Replacement

No surface or groundwater sources are located within the refuse pile area.

732 Sediment Control Measures

The sediment control measures within the refuse pile area have been designed to prevent additional contributions of sediment to stream flow or to runoff outside the permit area. In addition, they have been designed to meet applicable effluent limitations, and minimize erosion to the extent possible.

The structures to be used for the runoff-control plan for the permit area include disturbed and undisturbed area diversion channels, a sedimentation pond, berms, silt fences, and road diversions and culverts.

Reference RA Attachment 7-3, Addendum A for hydrologic information pertaining to the soil borrow area.

732.100 Siltation Structures

The siltation structure within the permit area is a sediment pond as described in Section 732.200. In addition to the sediment pond, a berm encircles the topsoil/subsoil stockpiles, providing treatment and total containment of the runoff from the stockpiles (RA Attachment 7-3). Typical cross sections of the ditches, berm and containment area are located in RA Attachment 7-4.

732.200 Sedimentation Ponds

There is a single sedimentation pond operating at the refuse pile site. The sedimentation pond topography and cross sections are presented on RA Plate 7-2 of this submittal. Details regarding sedimentation pond design are presented in Section 742.100 and RA Attachment 7-2. The sedimentation pond is defined as a Class A pond in accordance with TR-60 (U.S. Soil Conservation Service, 1976). A clean-out marker will be installed in the sediment pond.

The sedimentation pond is within the disturbed area boundary and is subject to final reclamation. The area is included in the calculation of the disturbed area subject to bonding and in the calculation of final reclamation costs.

Compliance Requirements. The sedimentation pond will be maintained until removal in accordance with the reclamation plan (see Section 540 of this submittal). When the pond is removed, the land will be revegetated in accordance with the reclamation plan defined in Section 540.

MSHA Requirements. MSHA requirements defined in 30 CFR 77.216 are not applicable since the sedimentation pond will not impound water or sediment to an elevation of 20 feet or more above the upstream toe of the structure. The pond will have a storage volume of less than 20 acre-feet.

732.300 Diversions

The objective of the runoff control plan is to isolate, to the maximum degree possible, runoff from disturbed areas from that of undisturbed areas. This is accomplished by routing runoff from the undisturbed slope above the refuse pile facilities via diversion berm/ditch UD-2 around the upstream side of the pile (see RA Plate 7-1). Disturbed area runoff will be collected by five diversion ditches and conveyed to the sediment pond. A brief list of each proposed diversion structure is as follows:

Diversion Ditches:

Undisturbed drainage ditches UD-1a,b and c located on the north side of the pile, will collect runoff from the undisturbed watershed above of the pile. The runoff will be discharge into UC-1.

Disturbed drainage ditch DD-1 is located along the east side of the pile.

Disturbed drainage ditches DD-2a and b are located on the west side of the pile.

Disturbed drainage ditches DD-3a and b will connect ditches DD-1 and DD-2 to the sediment pond.

Diversion Culverts:

Culvert UC-1 will convey runoff from the county road borrow ditch under the pile access road. This runoff will ultimately discharge to the natural drainage under the county road.

Culvert UC-2 will be constructed only if the "topsoil stockpile" is relocated adjacent to the Dugout Canyon Road. UC-2 will convey water from the undisturbed drainage above the disturbed area, under the stockpile to the undisturbed drainage below the site (RA Table 7-4 and RA Attachment 7-4). Detailed diversion design is presented in Section 742.

732.400 Road Drainage

No permanent roads are to be built within the refuse pile area. Road drainage facilities will include diversion ditches and culverts. The road drainage diversion ditches and culverts for the refuse pile area are included in the list of diversions presented in Section 732.300 above. Additional road drainage design information is presented in Section 742.

All road drainage diversions will be maintained and repaired as needed. The culvert to be installed in the county road borrow ditch within the disturbed area is discussed in Section 742.300.

733 Impoundments

733.100 General Plans

There is a single sedimentation pond operating at the refuse pile facility as described in Section 732.200. The sedimentation pond is located in the southern portion of the disturbed area. The sedimentation pond topography and cross sections are presented on RA Plate 7-2 of this submittal. Detailed design information is presented in RA Attachment 7-2.

Certification. All maps and cross sections of the sedimentation pond have been prepared by or under the direction of, and certified by a qualified, registered, professional engineer.

Maps and Cross Sections. The topography and cross sections for the sedimentation pond are provided on RA Plate 7-2 of this submittal.

Narrative. A description of the sedimentation pond is presented in Sections 732.200 and 742 of this submittal.

Subsidence Survey Results. No underground coal mining will occur beneath the proposed sedimentation pond. Therefore, there will be no effects on the pond or pond embankment from subsidence.

Hydrologic Impact. The hydrologic and geologic information required to assess the hydrologic impacts of the proposed sedimentation pond are presented in Section 724 and Chapter 6 of this submittal and approved M&RP, respectively.

Design Plans and Construction Schedule. There are no additional structures proposed for the refuse pile area at this time. Any structures proposed in the future will not be constructed until the Division has approved the detailed design plan for the structure.

733.200 Permanent and Temporary Impoundments

Requirements. The sedimentation pond has been designed using current, prudent engineering practices. Specific foundation design and construction criteria are presented in Chapter 5 of this submittal. Specific hydrologic design criteria for the pond are presented in Section 743. The pond will be inspected regularly based on the schedule contained in Section 514.300.

Permanent Impoundments. There are no permanent impoundment structures proposed for use in mining and reclamation operations within the permit and adjacent areas.

Temporary Impoundments. The Division's authorization is being sought for the construction of the sedimentation pond as a temporary impoundment at the refuse pile area as part of coal mining and reclamation operations.

Hazard Notifications. The sedimentation pond will be examined for structural weakness and erosion in accordance with the schedule presented in Section 514.300. A report of these findings will be submitted to the Division as outlined in Section 514.300.

734 Discharge Structures

Discharge structures within the refuse pile area will consist of the emergency spillway on the sedimentation pond. All discharge structures will be constructed and maintained to comply with R645-301-744.

Reference RA Attachment 7-3, Addendum A for hydrologic information pertaining to the soil borrow area.

735 Disposal of Excess Spoil

There will be no excess spoil generated in the refuse pile area.

736 Coal Mine Waste

Coal mine waste generated by the Dugout Mine, will be stored and disposed of as described in Chapter 5 of this submittal.

737 Noncoal Mine Waste

Noncoal mine waste will be stored and disposed of as described in Chapter 5 of the approved M&RP.

738 Temporary Casing and Sealing of Wells

Each groundwater monitoring well identified on RA Plate 7-1 will be operated and maintained as described in Section 748.

740 DESIGN CRITERIA AND PLANS

741 General Requirements

This submittal includes site-specific plans that incorporate minimum design criteria for the control of drainage from disturbed and undisturbed areas.

742 Sediment Control Measures

742.100 General Requirements

Design. Sediment-control measures have been designed to provide the following:

Prevent additional contributions of sediment to stream flow or to runoff outside the permit area;

Meet the effluent limitations defined in Section 751 of this amendment; and

Minimize erosion to the extent possible.

Measures and Methods. The sediment control measures at the mine will include practices carried out within and adjacent to the disturbed area. Sediment control methods will include:

Retention of sediment within the disturbed area;

Diversion of upstream runoff away from the disturbed area; and

Provision of silt fences, riprap, contemporaneous revegetation, vegetative sediment filters, a sediment pond, and other measures that reduce overland flow velocities, reduce runoff volumes or trap sediment.

742.200 Siltation Structures

General Requirements. Additional contributions of suspended solids and sediment to stream flow or runoff outside the permit area will be prevented to the extent possible using a sedimentation pond. The pond will be constructed before refuse pile construction operations begin. A qualified registered professional engineer will certify pond construction.

Sedimentation Ponds. A single sedimentation pond has been designed for the refuse pile facilities. The sedimentation pond is located in the southern portion of the disturbed area. This pond will function as a single total containment pond with no planned discharge.

The location of the sedimentation pond is shown on RA Plate 7-1. The pond will not be located within a perennial stream channel.

Design, Construction, and Maintenance

The entire area draining to the sedimentation pond has been defined as a single watershed (DWS-1). The sedimentation pond has been designed to control sediment from areas which have been disturbed. The disturbed area contributing runoff to the sedimentation pond contains 15.60 acres. Refer to RA Plate 7-1 for a delineation of watershed boundaries and RA Attachment 7-2 for additional pond detail.

The sedimentation pond was designed to fully contain the sediment generated within the disturbed area. The sedimentation pond has been designed with a sediment storage capacity of 0.67 feet. The elevation of the maximum sediment level is 5897.55 feet. The 60% sediment clean-out volume of 0.40 acre-feet is an elevation of 5896.5 feet.

Sediment Removal. Sediment removal from the sedimentation pond will occur when the sediment level reaches the 60% clean-out level. The sediment will be disposed in the refuse pile as discussed in Section 526.100 and 732.200 of this M&RP.

Design Event. As this is a total containment structure, the sedimentation pond has been designed to fully contain runoff resulting from the 100-year, 24-hour precipitation event (2.8 inches), instead of the 10-year, 24-hour event (1.65inches). This will provide a significant additional storage volume.

Detention Time. As this structure is planned to be a total containment pond, no decant structure will be part of the pond design. If collected water is to be removed from the structure,

Division approval will be obtained and an adequate detention time will be provided in the water collected in the pond to allow the effluent to meet UPDES and 40 CFR Part 434 limitations.

Runoff Volume. The curve numbers used to determine the runoff volumes were based on professional judgment and soil and vegetation information presented in Chapters 2 and 3 of this submittal. The curve number for the pond area was assumed to be 90.

The storm runoff volume to the sedimentation pond resulting from the 100-year, 24-hour storm event was calculated to be 2.22 acre-feet. The combined volume of the runoff from the 100-year, 24-hour storm event and the maximum sediment storage is 2.89 ac-ft. Calculations for pond sizing are contained in RA Attachment 7-2.

As the pond is a total containment structure, no principal spillway or dewatering structure is included in the design. RA Attachment 7-2 presents the stage-capacity table for the pond.

An open-channel emergency spillway has been designed for the pond to allow discharge from the pond in the event that a series of greater than design events occur within a short period. Details regarding this emergency spillway are discussed in RA Attachment 7-2.

The emergency spillway has been designed with a median riprap diameter of 6 inches within the crest section and 12 and 9 inches in the outslope sections of the spillway. This riprap was underlain with a geofabric liner. The expected velocity at the spillway outlet to the ephemeral channel will be 4.47 feet per second, which velocity is not considered erosive. Calculations regarding the emergency spillway are presented in RA Attachment 7-2.

Dewatering Device. No dewatering device is planned for the pond. Runoff water collected will seep through the pond bottom, evaporate from the ponded water surface, and be used for dust suppression on the site area.

Short Circuiting. Short circuiting will not occur as the pond will be a total containment structure.

Excessive Settlement. The sedimentation pond is to be incised in native material. Therefore, it is not expected that embankment settlement will be a significant concern. Stability analyses presented in Chapter 5 indicate that the pond embankment will be stable under both normal and rapid drawdown conditions.

Embankment Material. During construction of the sedimentation pond, the inslope of the pond was shaped to provide a 2H:1V slope. Material to be used on the inslope was inspected to ensure the material is free of sod, large roots, and frozen soil.

Compaction. The sedimentation pond was incised in native materials. Any materials that are disturbed during the inslope reshaping will be compacted to a minimum dry density of 90% as determined by ASTM D1557.

MSHA Sedimentation Ponds. MSHA requirements defined in 30 CFR 77.216 are not applicable at this site since the proposed sedimentation pond will not impound water or sediment to an elevation of 20 feet or more above the upstream toe of the structure. The pond will also store a volume less than 20 acre-feet.

Other Treatment Facilities. There are no other treatment facilities within the mine permit area.

Exemptions. No exemptions are being proposed at this time.

742.300 Diversions

General Requirements. The diversions within the refuse pile area will consist of drainage ditches and culverts. All diversions within the site area have been designed to minimize adverse impacts to the hydrologic balance, to prevent material damage outside the permit area, and to assure the safety of the public.

All diversions and diversion structures have been designed and will be constructed, maintained and used to:

Be stable;

Provide protection against flooding and resultant damage to life and property;

Prevent, to the extent possible, additional contributions of suspended solids to stream flow outside the permit area; and

Comply with all applicable local, state, and federal laws and regulations.

All diversions within the refuse pile area will be removed when no longer needed. The diversions will be reclaimed in accordance with the reclamation plan defined in Chapter 5.

Peak discharge rates from the undisturbed and disturbed area drainages within the site area were calculated for use in designing diversion ditches and culverts. The storm runoff calculations for the temporary diversion structures were based on the 100-year, 6-hour precipitation event of 2.05 inches.

Curve numbers were based on professional judgment and information presented in Chapters 2 and 3 of this submittal. The curve numbers for the various watersheds are summarized in RA Attachment 7-4.

The drainage areas within and above the facilities area are presented on RA Plate 7-1. A summary of the characteristics of watersheds contributing to the diversions is presented in RA Attachment 7-4.

The size and location of each proposed diversion ditch and culvert will be verified in the field prior to initiating refuse pile construction. All proposed diversions are presented on RA Plate 7-1. The minimum capacity and freeboard of each diversion ditch and culvert was determined based on the minimum ditch slope. The maximum velocity and need for a channel lining or outlet protection was

calculated based on the maximum ditch or culvert slope. Slopes were measured from a contour map with a scale of 1" = 100'. All diversion and culvert calculations are presented in RA Attachment 7-4 and summarized in RA Tables 7-3 and 7-4.

Diversion Berms. Diversion ditch DD-1 planned for this site will be an asymetrical ditch which will have a 10H:1V slope from the pile to the ditch bottom and a 2H:1V slope out of the ditch. The purpose of this ditch shape is to provide vehicle access to the pile outslope once the final configuration is reached, as well as a means of conveying the runoff from the pile. However, to meet MSHA requirements for safety concerns adjacent to slopes, a berm will need to be placed immediately adjacent to the ditch along the outslope. Since none of the berms have been designed specifically to convey runoff, no calculations concerning the hydraulic characteristics of these berms are provided.

An temporary interim berm will be constructed to divert water away from the below grade waste rock storage area. This will remain in place until the waste rock fill reaches the level of the surrounding ground and the construction of Ditches DD-1 and DD-2 is completed.

742.400 Road Drainage

No permanent roads are to be built in the refuse pile area. Runoff from the temporarily constructed road within the disturbed area will be treated by collection in the diversion ditches and sediment pond. The drainage ditches associated with the county road will be maintained during operations by placing a culvert under the refuse pile access road. Once the refuse pile is completed and reclaimed so that the road is no longer required for access, the drainage ditch along the county road will be restored by removing the culvert and reclaiming the road in accordance with Chapter 5 of this submittal. None of these roads are located in the channel of an intermittent or perennial stream. Control structures have been located to minimize downstream sedimentation and flooding. Diversion ditches and culverts for all roads are described in Section 732.300.

743 Impoundments

All pertinent information regarding the sedimentation pond is presented in Sections 732.200 and 742.200.

744 Discharge Structures

The discharge structure within the permit area is the emergency spillway on the sedimentation pond. The spillway on the sedimentation pond has been designed to pass the 100-year, 6-hour storm event assuming that the pond was full. Therefore, the spillway will adequately pass the peak discharge from the 25-year, 6-hour precipitation event. Detailed information concerning the sedimentation pond is presented in Section 742.200.

745 Disposal of Excess Spoil

There will be no excess spoil generated within the refuse pile area.

746 Coal Mine Waste

746.100 General Requirements

All coal mine waste will be placed in a controlled manner to minimize adverse effects of leachate and surface water runoff on surface and groundwater quality and quantity. This waste will be placed in the refuse pile facility as described in Chapter 5 of this submittal.

746.200 Refuse Piles

A detailed description of the refuse pile is presented in Chapter 5 of this submittal.

746.300 Impounding Structures

No impounding structures within the refuse pile area will be constructed of coal mine waste or used to impound coal mine waste.

746.400 Return of Coal Processing Waste to Abandoned Underground Workings

No coal processing waste will be generated in the permit area.

747 Disposal of Noncoal Mine Waste

Disposal of noncoal mine waste is discussed in Chapter 5 of the approved M&RP.

748 Casing and Sealing of Wells

Each monitoring well has been cased, sealed, or otherwise managed, as approved by the Division, to prevent acid or other toxic drainage from entering ground or surface water, to minimize disturbance to the hydrologic balance, and to ensure the safety of people, livestock, fish and wildlife, and machinery in the site and adjacent area. The drill logs and completion diagrams for the wells are contained in RA Attachment 6-1.

750 PERFORMANCE STANDARDS

All operations will be conducted to minimize disturbance to the hydrologic balance within the permit and adjacent areas, to prevent material damage to the hydrologic balance outside the permit area, and support approved post-mining land uses.

751 Water Quality Standards and Effluent Limitations

Discharges of water from disturbed areas will be in compliance with all Utah and federal water quality laws and regulations and with effluent limitations for coal mining contained in 40 CFR Part 434.

752 Sediment Control Measures

All sediment control measures will be located, maintained, constructed and reclaimed according to plans and designs presented in Sections 732, 742, and 760 of this submittal and the approved M&RP.

752.100 Siltation Structures and Diversions

Siltation structures and diversions will be located, maintained, constructed and reclaimed according to plans and designs presented in Sections 732, 742, and 763 of this submittal and the approved M&RP.

752.200 Road Drainage

Runoff from temporary roads will be treated through siltation structures which will be located, maintained, constructed and reclaimed according to plans and designs presented in Sections 732, 742, and 763 of this submittal and the approved M&RP.

753 Impoundments and Discharge Structures

Impoundments and discharge structures will be located, maintained, constructed and reclaimed as described in Sections 733, 734, 743, 745, and 760 of this M&RP.

754 Disposal of Excess Spoil, Coal Mine Waste and Noncoal Mine Waste

Disposal areas for coal mine waste and noncoal mine waste will be located, maintained, constructed and reclaimed as described in Sections 736, 737, 746, 747, 760 and Chapter 5 of this submittal and the approved M&RP.

755 Casing and Sealing of Wells

All wells will be managed as described in Sections 551, 748 and 765 of this submittal.

760 RECLAMATION

761 General Requirements

A detailed reclamation plan for the mine is presented in Section 540. In general, CFC will ensure that all temporary structures are removed and reclaimed. Other than for restoration of natural drainage patterns, no permanent diversions are included in the reclamation plan. Reference RA Attachment 2-3 for soil information, pictures and drawings and RA Attachment 7-3, Addendum A for hydrologic information pertaining to the soil borrow area.

762 Roads

No roads will be retained after reclamation of the site.

762.100 Restoring the Natural Drainage Patterns

Natural drainages will be restored during reclamation of the refuse pile area by removing the sediment pond and diversion ditches. As presented in Chapter 5, the existing topography will be altered by the construction of the refuse pile. This alteration will not significantly alter the natural

drainage pattern of the area. This is because the site is located on a topographic divide between two small ephemeral drainages. RA Plate 7-3 presents the reclaimed drainages.

Two channels will be installed as part of the final reclamation (see RA Plates 5-2 and 7-3). Due to the proximity of the adjacent refuse, the channels will be designed to safely convey the peak flow resulting from the 100-year, 6-hour precipitation event. Table 7-3 summarizes the reclaimed channel configurations.

Erosive velocity has been determined to be 5 feet per second based on alluvial silts and fine gravels expected in the area (Chow, V.T., 1959. Open Channel Flow. McGraw-Hill Book Company, New York, New York. Page 680). For channels RD-1 and RD-2, riprap will only be installed in the steeper channel sections. A typical riprap cross section is provided in RA Attachment 7-4.

The cross-sections for the reclamation channel were designed using the minimum channel slope, while riprap sizing was designed using the maximum channel slope. Reclamation slopes were estimated from the topographic contours provided in RA Plate 7-3. Thickness of the riprap layer will be a minimum of 12". Sand filter blankets will be installed beneath the riprap at a thickness equal to one-half the thickness of the riprap or 6 inches; whichever is greater.

Since the site materials will be reworked during reclamation of the facility, pre-construction samples of channel bed materials would not likely be representative of reclamation conditions. Hence, no information is presented in this submittal regarding filter blanket sizing. Following regrading of the materials at the location of the reclamation channel, and prior to installation of the riprap, samples of the bed material will be collected and analyzed to determine soil gradations. The filter blanket will then be sized in accordance with standard practices at the time (e.g., Barfield et al., 1981) to determine the thickness and gradation of filter blanket materials.

762.200 Reshaping Cut and Fill Slopes

Through the use of contemporaneous reclamation, the fill slopes of the pile will be reclaimed as they are constructed. Section 540 describes the regrading process. All slopes will be shaped to be compatible with the post-mining land use and to complement the drainage pattern of the surrounding terrain.

763 Siltation Structures

763.100 Maintenance of Siltation Structures

All siltation structures will be maintained until removed in accordance with the approved reclamation plan.

763.200 Removal of Siltation Structures

The land on which the siltation structure were located will be regraded and revegetated in accordance with the reclamation plan presented in Section 540 of this amendment.

764 Structure Removal

A timetable for the reclamation of the site is presented in RA Figure 5-1.

765 Permanent Casing and Sealing of Wells

When no longer required to monitor ground water levels in the area of the refuse pile or other use approved by the Division upon a finding of no adverse environmental or health and safety effects, or unless approved for transfer as a water well, each well will be capped, sealed, backfilled, or otherwise properly managed, as required by the Division. Permanent closure measures will be designed to prevent access.

Figure7-1WR.dwg

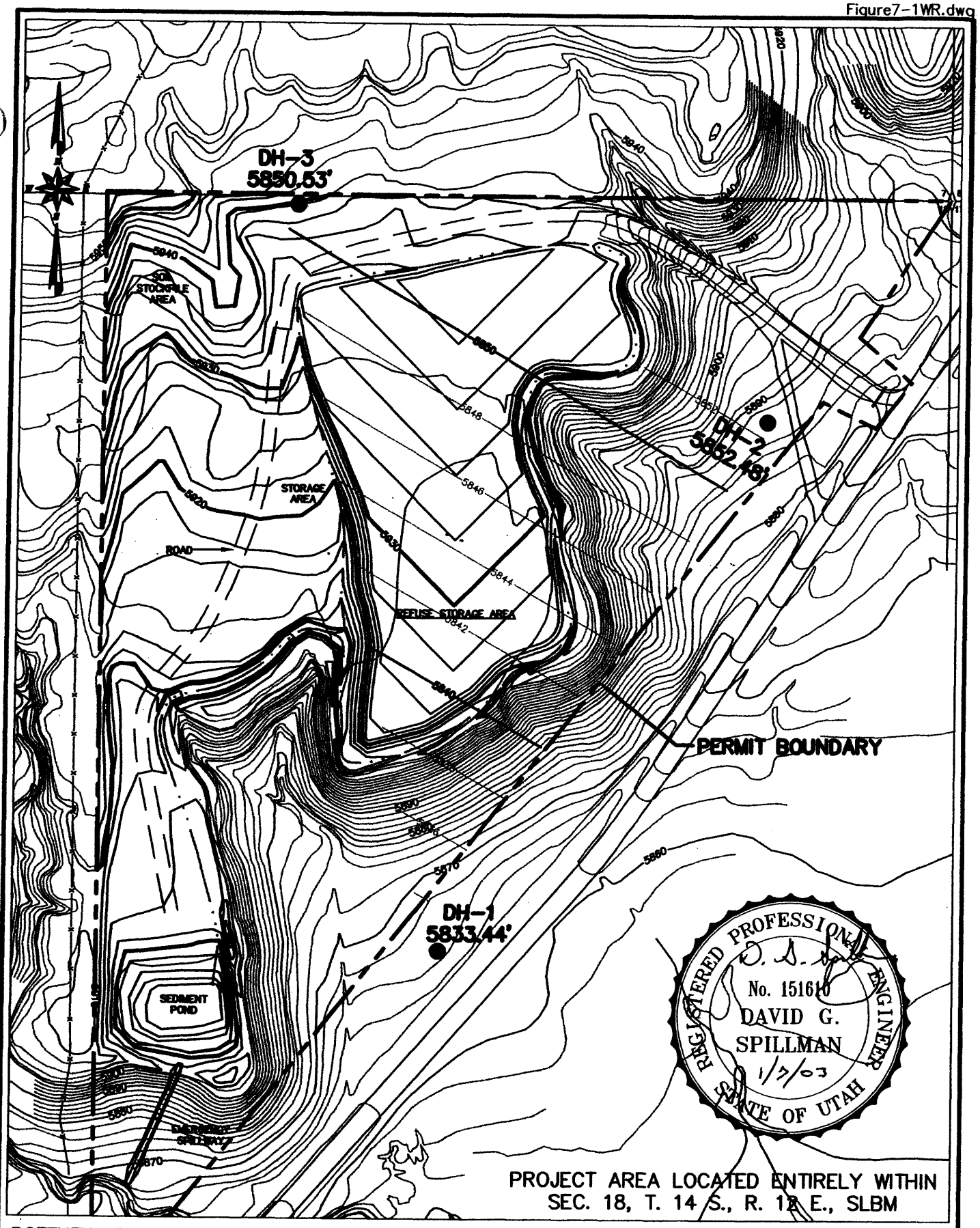

PROJECT AREA LOCATED ENTIRELY WITHIN SEC. 18, T. 14 S., R. 12 E., SLBM

POTENTIOMETRIC SURFACE BASED ON WATER ELEVATIONS MEASURED MARCH 25, 2002 ADDITIONAL WATER LEVEL DATA CONTAINED IN RA ATTACHMENT 7-1.

0' 200'

RA FIGURE 7-1. POTENTIOMETRIC SURFACE

RA TABLE 7-3

DIVERSION DESIGN SUMMARY

I.D. No.	Min. Bottom Width (ft)	Min. Channel Depth (ft)	Left Side Slope (xH:1V)	Right Side Slope (xH:1V)	Max. Flow Depth (ft)	Min. Slope (%)	Max. Slope (%)	Peak Flow (cfs)[a]	Req. Riprap D_{50} (ft)	Minimum Freeboard (ft)
OPERATIONAL DIVERSIONS										
DD-1	4.0	1.5	2.0	2.0	0.96	0.6	12.9	12.82	0.5*	0.54
DD-2a	15.0	1.0	2.0	2.0	0.22	1.9	10.0	8.02	None	0.78
DD-2b	4.0	1.0	2.0	2.0	0.41	5.0	13.5	8.02	0.5	0.59
DD-3a	15.0	1.0	2.0	2.0	0.37	1.3	3.5	16.03	None	0.63
DD-3b	2.0	1.5	2.0	2.0	1.03	1.3	9.0	16.03	0.5	0.47
UD-1a	1.0	1.0	2.0	2.0	0.27	2.0	15.0	0.71	None	0.73
UD-1b	2.0	1.5	2.0	2.0	0.87	0.3	2.8	4.74	None	0.63
UD-1c	2.0	1.0	2.0	2.0	0.5	4.4	23.3	4.74	0.5	0.5
RECLAMATION CHANNELS										
RD-1a	1.0	1.0	2.0	2.0	0.35	2.0	15.0	5.41	None	0.65
RD-1b	3.0	1.5	2.0	2.0	0.83	0.3	4.6	5.41	None	0.67
RD-1c	2.0	1.0	2.0	2.0	0.59	4.4	23.3	6.36	0.5	0.41
RD-2	1.0	1.0	2.0	2.0	0.37	1.0	14.3	0.71	None	0.63
RD-3	2.0	1.0	2.0	2.0	0.14	8.0	30.5	0.9	None	0.86
RD-4	1.0	1.0	2.0	2.0	0.19	2.8	6.1	0.41	None	0.81
RD-5	3.0	1.0	2.0	2.0	0.56	1.7	2.4	6.87	None	0.44
Swale 1	3.0	1.0	4.0	4.0	0.44	NA	NA	6.36	None	0.56

(a) Peak discharge resulting from the 100-year, 6-hour precipitation event.

* 6" only on slopes exceeding 4%.

RA TABLE 7-4

CULVERT DESIGN SUMMARY

Diversion Culvert	Minimum Diameter (in)	Culvert Material	Inlet Type	Culvert Slope (%)	Peak Flow (cfs) [(a)]	Outlet Velocity (fps)	Outlet Riprap D_{50} (in)
UC-1	24	CMP	Projecting	4.5	4.74	6.31	6
UC-2*	24	CMP	Projecting	1.5	6.78	4.66	None

(a) Peak discharge resulting from the 100-year, 6-hour precipitation event.

* Culvert UC-2 will be constructed only if the Topsoil Stockpile is relocated adjacent to the Dugout Canyon Road.

RA ATTACHMENT 7-2

SEDIMENT POND DESIGN CALCULATIONS

REGISTERED PROFESSIONAL ENGINEER
2-11-05
No. 189797
LAYNE D.
JENSEN
STATE OF UTAH

Ongont Canyon Mine Refuse Pile
Sedimentation Pond As-built Calculation

The entire area draining to the sedimentation pond has been defined as a single watershed (OWS-1). The entire watershed has been assumed to have a curve number of 90 (dirt road)

The runoff depth is controled by the curve number and precipitation event in the following equation.

$$Q = \frac{(P-0.2S)^2}{P+0.8S} \qquad S = \frac{1000}{CN} - 10 = 1.11$$

Assuming a 100-year 24-hour storm event $P = 2.8''$

$$Q = \frac{(2.8-0.2(1.11))^2}{2.8+0.8(1.11)} = 1.8''$$

Watershed Area = 644750 ft^2

Runoff Volume = $(644750)(1.8/12) = 96713\ ft^3 \Rightarrow 2.22$ Ac-ft

This pond has a single open channel spillway. (RA Plate 7-2)

Spillway elevation = 5902.5 ft
BW = 10'
Left SS = 4:1
Right SS = 3:1
Crest length = 10'

Capacity at the bottom of the spillway = 2.89 Ac-ft (pg 2+3)
Total sediment capacity = 0.67 Ac-ft (Elevation = 5897.55)
60% cleanout volume = 0.40 Ac-ft (Elevation = 5896.5)

The hydraulic efficiency was assessed using SEDCAD (Warner and Schwab, 1992)

Assuming a 100-year 6-hour storm event beginning with the pond full the peak discharge is 9.73 cfs with a peak stage of 5903.0. Thus, the maximum flow depth is 6"

Minimum embankment elevation = 5905.0
Minimum freeboard = 2.0 ft

SEDCAD calculations can be found on Pgs 4-9

Dugout Canyon Mine Refuse Pile Sediment Pond

Stage-Capacity Table

Elevation (ft)	Area* (ft^2)	Average Area (ft^2)	Contour Interval (ft)	Incremental Volume (ft^3)	Cummulative Volume (ft^3)	Cummulative Volume (ac-ft)
5894	114					
		2742	1	2742	2742	0.06
5895	5370					
		7697	1	7697	10439	0.24
5896	10024					
		11415.5	1	11415.5	21854.5	0.50
5897	12807					
		13792.5	1	13792.5	35647	0.82
5898	14778					
		15754	1	15754	51401	1.18
5899	16730					
		18099.5	1	18099.5	69500.5	1.60
5900	19469					
		20646	1	20646	90146.5	2.07
5901	21823					
		23068	1	23068	113214.5	2.60
5902	24313					
		25177	0.5	12588.5	125803	2.89
5902.5	26041					
		26964	0.5	13482	139285	3.20
5903	27887					
		30017	1	30017	169302	3.89
5904	32147					
		37227	1	37227	206529	4.74
5905	42307					

* Determined from the topography of the existing pond (See RA Plate 7-2).

Stage-Capacity Curve
Refuse Pile Sediment Pond

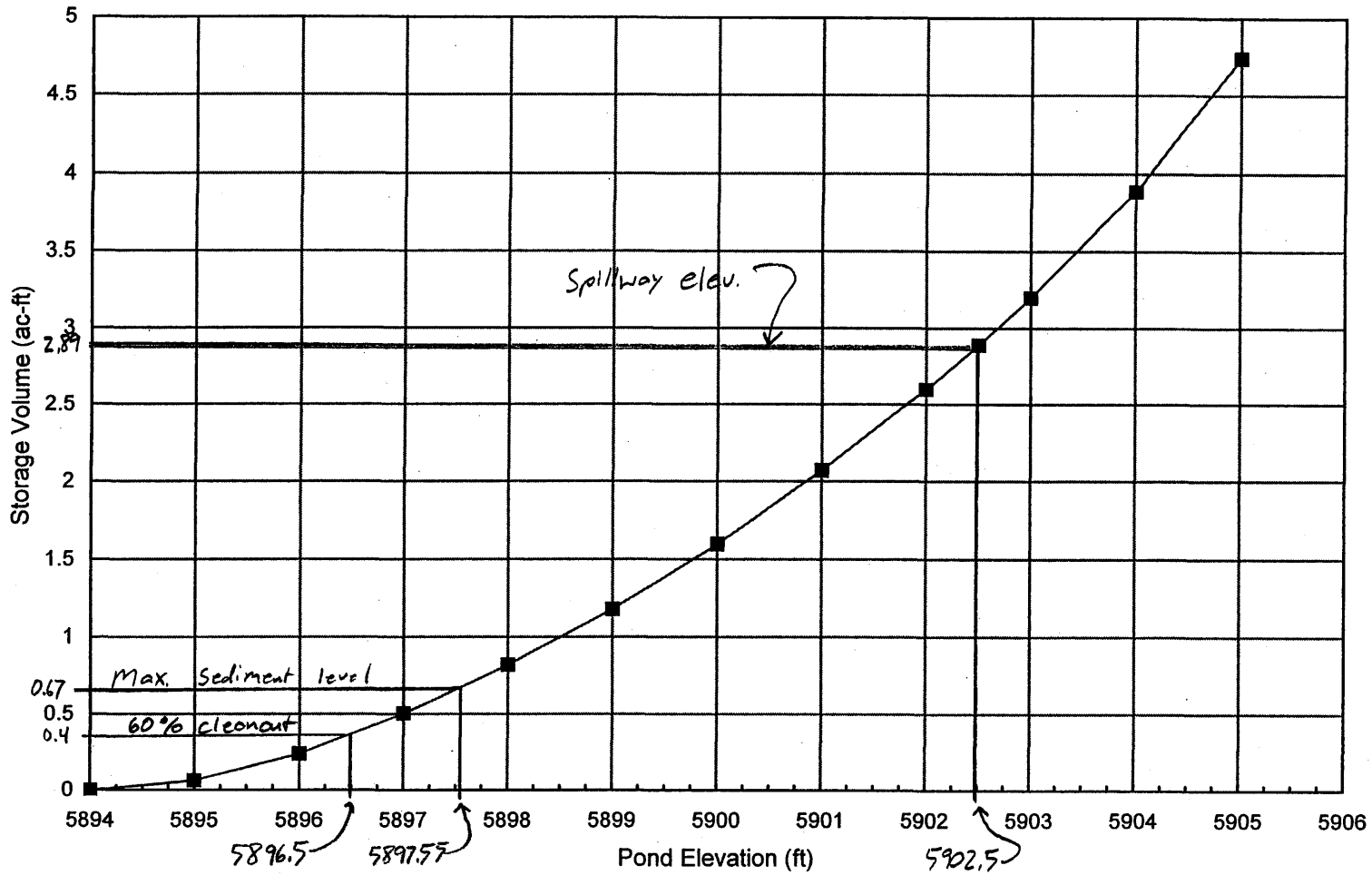

CIVIL SOFTWARE DESIGN

SEDCAD+ Version 3

DUGOUT REFUSE PILE SEDIMENT POND

by

Name: LDJ

Company Name: EarthFax Engineering INC.
File Name: G:\UC801\08\POND

Date: 01-31-2005

Civil Software Design -- SEDCAD+ Version 3.1
Copyright (C) 1987-1992. Pamela J. Schwab. All rights reserved.

Company Name: EarthFax Engineering INC.
Filename: G:\UC801\08\POND User: LDJ
Date: 01-31-2005 Time: 16:24:15
DUGOUT REFUSE PILE SEDIMENT POND
Storm: 2.05 inches, 100 year- 6 hour, SCS 6 Hour
Hydrograph Convolution Interval: 0.1 hr

SUBWATERSHED/STRUCTURE INPUT/OUTPUT TABLE

-Hydrology-

JBS	SWS	Area (ac)	CN	UHS	Tc (hrs)	K (hrs)	X	Base-Flow (cfs)	Runoff Volume (ac-ft)	Peak Discharge (cfs)
111	1	14.80	90	F	0.055	0.000	0.000	0.0	1.40	15.98
			Type: Pond		Label: POND					
111	Structure	14.80							1.40	
111	Total IN	14.80							1.40	15.98
111	Total OUT								1.40	9.73

Civil Software Design -- SEDCAD+ Version 3.1
Copyright (C) 1987-1992. Pamela J. Schwab. All rights reserved.

Company Name: EarthFax Engineering INC.
Filename: G:\UC801\08\POND User: LDJ
Date: 01-31-2005 Time: 16:24:15
DUGOUT REFUSE PILE SEDIMENT POND
Storm: 2.05 inches, 100 year- 6 hour, SCS 6 Hour
Hydrograph Convolution Interval: 0.1 hr

POND INPUT/OUTPUT TABLE

J1, B1, S1
POND

Drainage Area from J1, B1, S1, SWS(s)1: 14.8 acres
Total Contributing Drainage Area: 14.8 acres

DISCHARGE OPTIONS:

	Emergency Spillway
Riser Diameter (in)	----
Riser Height (ft)	----
Barrel Diameter (in)	----
Barrel Length (ft)	----
Barrel Slope (%)	----
Manning's n of Pipe	----
Spillway Elevation	----
Lowest Elevation of Holes	----
# of Holes/Elevation	----
Entrance Loss Coefficient	----
Tailwater Depth (ft)	----
Notch Angle (degrees)	----
Weir Width (ft)	----
Siphon Crest Elevation	----
Siphon Tube Diameter (in)	----
Siphon Tube Length (ft)	----
Manning's n of Siphon	----
Siphon Inlet Elevation	----
Siphon Outlet Elevation	----
Emergency Spillway Elevation	5902.5
Crest Length (ft)	10.0
Z:1 (Left and Right)	4 3
Bottom Width (ft)	10.0

POND RESULTS:

Permanent Pool (ac-ft)
2.9

	Runoff Volume (ac-ft)	Peak Discharge (cfs)
IN	1.40	15.98
OUT	1.40	9.73

Peak Elevation	Hydrograph Detention Time (hrs)
5903.0	0.00

****

Civil Software Design -- SEDCAD+ Version 3.1
Copyright (C) 1987-1992. Pamela J. Schwab. All rights reserved.

Company Name: EarthFax Engineering INC.
Filename: G:\UC801\08\POND User: LDJ
Date: 01-31-2005 Time: 16:24:15
DUGOUT REFUSE PILE SEDIMENT POND
Storm: 2.05 inches, 100 year- 6 hour, SCS 6 Hour
Hydrograph Convolution Interval: 0.1 hr

ELEVATION-DISCHARGE TABLE

J1, B1, S1
POND

Drainage Area from J1, B1, S1, SWS(s)1: 14.8 acres
Total Contributing Drainage Area: 14.8 acres

Elevation	Emergency Spillway (cfs)	Total Discharge (cfs)
5894.00	0.0	0.0
5894.50	0.0	0.0
5895.00	0.0	0.0
5895.50	0.0	0.0
5896.00	0.0	0.0
5896.50	0.0	0.0
5897.00	0.0	0.0
5897.50	0.0	0.0
5898.00	0.0	0.0
5898.50	0.0	0.0
5899.00	0.0	0.0
5899.50	0.0	0.0
5900.00	0.0	0.0
5900.50	0.0	0.0
5901.00	0.0	0.0
5901.50	0.0	0.0
5902.00	0.0	0.0
5902.50	0.0	0.0
5903.00	9.9	9.9
5903.10	11.8	11.8
5903.20	16.0	16.0
5903.30	20.6	20.6
5903.40	25.8	25.8
5903.50	30.9	30.9
5904.00	68.5	68.5
5904.50	118.4	118.4
5905.00	182.6	182.6

Civil Software Design -- SEDCAD+ Version 3.1
Copyright (C) 1987-1992. Pamela J. Schwab. All rights reserved.

Company Name: EarthFax Engineering INC.
Filename: G:\UC801\08\POND User: LDJ
Date: 01-31-2005 Time: 16:24:15
DUGOUT REFUSE PILE SEDIMENT POND
Storm: 2.05 inches, 100 year- 6 hour, SCS 6 Hour
Hydrograph Convolution Interval: 0.1 hr

ELEVATION-AREA-CAPACITY-DISCHARGE TABLE

J1, B1, S1
POND

Drainage Area from J1, B1, S1, SWS(s)1: 14.8 acres
Total Contributing Drainage Area: 14.8 acres

SW#1: Emergency Spillway

Elev	Stage (ft)	Area (ac)	Capacity (ac-ft)	Discharge (cfs)	
5894.00	0.00	0.00	0.00	0.00	
5894.50	0.50	0.04	0.01	0.00	
5895.00	1.00	0.12	0.05	0.00	
5895.50	1.50	0.17	0.12	0.00	
5896.00	2.00	0.23	0.22	0.00	
5896.50	2.50	0.26	0.34	0.00	
5897.00	3.00	0.29	0.48	0.00	
5897.50	3.50	0.32	0.64	0.00	
5898.00	4.00	0.34	0.80	0.00	
5898.50	4.50	0.36	0.97	0.00	
5899.00	5.00	0.38	1.16	0.00	
5899.50	5.50	0.41	1.36	0.00	
5900.00	6.00	0.45	1.58	0.00	
5900.50	6.50	0.47	1.81	0.00	
5901.00	7.00	0.50	2.05	0.00	
5901.50	7.50	0.53	2.31	0.00	
5902.00	8.00	0.56	2.58	0.00	
5902.50	8.50	0.60	2.87	0.00	Stage of SW#1
5902.99	8.99	0.60	3.17	9.73	Peak Stage
5903.00	9.00	0.64	3.18	9.85	
5903.10	9.10	0.65	3.24	11.83	
5903.20	9.20	0.66	3.31	15.96	
5903.30	9.30	0.67	3.37	20.62	
5903.40	9.40	0.68	3.44	25.78	
5903.50	9.50	0.69	3.51	30.87	
5904.00	10.00	0.74	3.87	68.51	
5904.50	10.50	0.85	4.26	118.41	
5905.00	11.00	0.97	4.72	182.55	

As-built spillway verification.

The channel dimensions vary throughout the length of the spillway. The minimum channel dimensions will be assumed.

$BW = 9'$
$SS = 1.75:1$
$Depth = 18''$
$D_{50} = 6''$

minimum slope = 5.03 %

Maximum slope = 30.4 %

To make the verification more conservative a peak flow equal to the peak inflow will be used instead of the calculated discharge rate

$Q = 15.98$ cfs

Maximum velocity = 6.54 ft/s. (pg 11)
6" riprap on a 1.75:1 slope can handle a velocity upto 7.0 fps.

Maximum Depth = 0.39 ft (pg 12)
Minimum Freeboard = 1.11 ft

References

Abt, S.R., Khattak, M.S., Nelson, J.D., Ruff, J.F., Shaikh, A., Wittler, R.J., Lee, D.W., and Hinkle, N.E. 1987. Development of Riprap Design Criteria by riprap testing in flumes: Phase I U.S. Nuclear Regulatory Commission. Washington D.C.

Searcy, J.K., 1967. Use of Riprap for bank protection. U.S. Dept. of Transportation, Bureau of Public Roads. U.S. Government Printing office. Washington D.C.

Warner, R.C. and Schwab P.J., 1992 SEOCAD Version 3.0 Civil Software Design.

Emergency Spillway Max. Slope
Worksheet for Trapezoidal Channel

Project Description	
Worksheet	REFUSE PILE PONC
Flow Element	Trapezoidal Channel
Method	Manning's Formula
Solve For	Channel Depth

Input Data		
Mannings Coeffic	0.050	D_{50} = 6" Slope = 30.4 %
Slope	304000	ft/ft
Left Side Slope	1.75	V : H
Right Side Slope	1.75	V : H
Bottom Width	9.00	ft
Discharge	15.95	cfs

Results		
Depth	0.27	ft
Flow Area	2.4	ft²
Wetted Perim	9.61	ft
Top Width	9.30	ft
Critical Depth	0.46	ft
Critical Slope	0.051755	ft/ft
Velocity	6.54	ft/s < 7.0 fps ∴ ok
Velocity Head	0.66	ft
Specific Energ	0.93	ft
Froude Numb	2.25	
Flow Type	Supercritical	

© Haestad Methods, Inc.
EarthFax Engineering Inc
37 Brookside Road Waterbury, CT 06708 USA (203) 755-1666

Emergency Spillway Min. Slope
Worksheet for Trapezoidal Channel

Project Description	
Worksheet	REFUSE PILE PONC
Flow Element	Trapezoidal Channel
Method	Manning's Formula
Solve For	Channel Depth

Input Data		
Mannings Coeffic	0.038	D_{50} = 6" Slope = 5%
Slope	050000	ft/ft
Left Side Slope	1.75	V : H
Right Side Slope	1.75	V : H
Bottom Width	9.00	ft
Discharge	15.95	cfs

Results		
Depth	0.39	ft << 1.5 ft min, freeboard = 1.11 ft
Flow Area	3.6	ft²
Wetted Perim	9.89	ft
Top Width	9.44	ft
Critical Depth	0.46	ft
Critical Slope	0.029189	ft/ft
Velocity	4.47	ft/s
Velocity Head	0.31	ft
Specific Energ	0.70	ft
Froude Numb	1.28	
Flow Type	Supercritical	

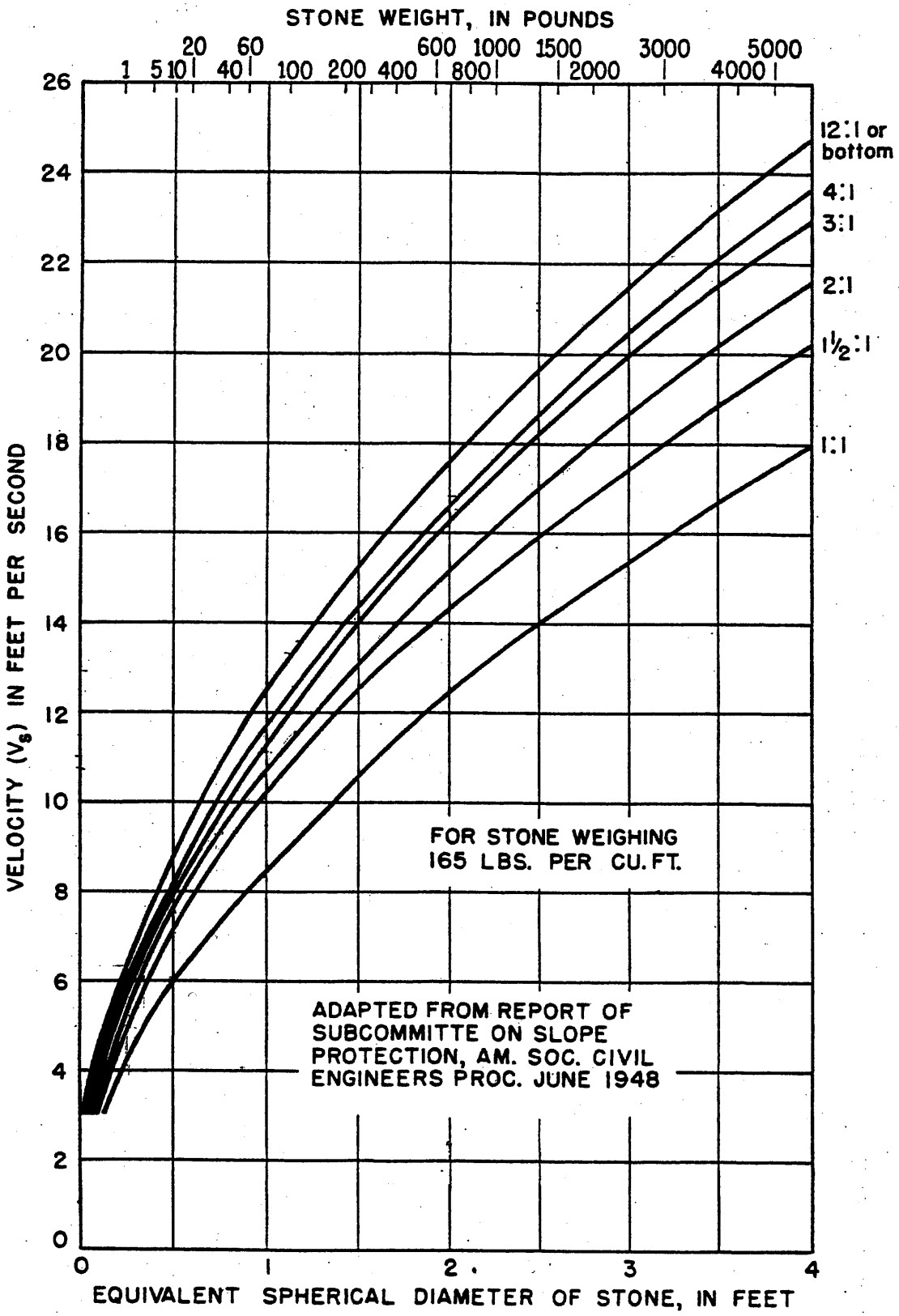

FIG. 2-SIZE OF STONE THAT WILL RESIST DISPLACEMENT FOR VARIOUS VELOCITIES AND SIDE SLOPES

Searcy, J.K. 1967. Use of Riprap for Bank Protection. U.S. Dept. of Transportation, Bureau of Public Roads, U.S Government Printing Office, Washington D.C.

RA ATTACHMENT 7-3

TOPSOIL/SUBSOIL STOCKPILE SEDIMENT CONTROL

REGISTERED PROFESSIONAL ENGINEER
1-20-05
No. 189797
LAYNE D.
JENSEN
STATE OF UTAH

Topsoil Stockpile Sediment Control

A berm will be placed around the entire topsoil stockpile to contain all runoff from the topsoil stockpile. The berm has been designed to completely contain the 10-yr 24-hour storm event with a spillway through a silt fence to handle a larger event.

Rainfall depth = 1.95 in (10-yr 24-hr)

Although the topsoil pile will be gouged and reseeded a bare earth condition will be assumed with a hydrologic soil group of B

$$CN = 82 \quad \text{(dirt road)}$$

$$\text{Runoff depth} = \frac{(P - 0.2S)^2}{P + 0.8S}$$

$$S = 1000/CN - 10 = \frac{1000}{82} - 10 = 2.2$$

$$\text{Runoff depth} = \frac{(1.95 - (0.2)(2.2))^2}{1.95 + 0.8(2.2)} = 0.61 \text{ inch}$$

Topsoil stockpile Area = 31,148 ft^2

Total runoff = $\left(\frac{0.61}{12}\right)(31{,}148\ ft^2) = 1595\ ft^3$

Runoff will be split roughly equally between a north and south containment area.

North containment

Containment Area = $(2)(5.75) + (2)(4) = 19.5\ ft^2$

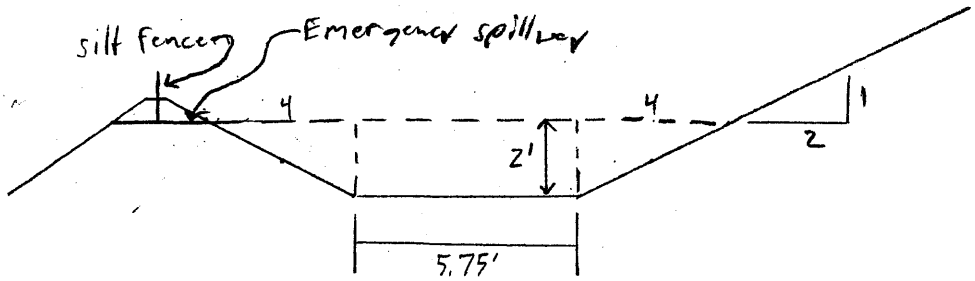

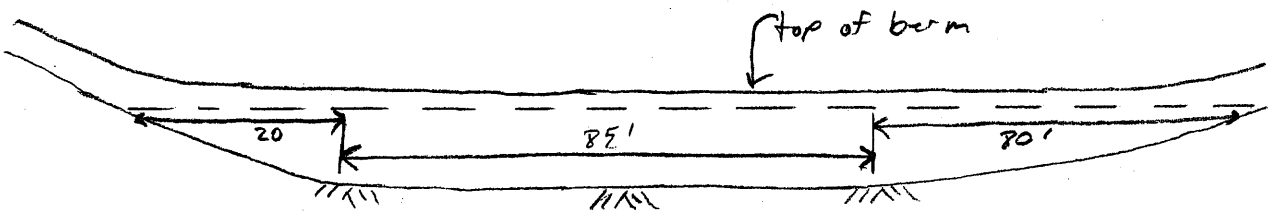

space between berm and pile is only 2.5' here reduce vol. by 2/3

$$Vol = (19.5\,ft^2)(85') + \tfrac{1}{2}(19.5)(20) + (\tfrac{1}{2})(\tfrac{1}{3})(19.5)(80)$$

$$= 1657.5 + 195 + 234 = 2086.5\ ft^3$$

This side of the containment can hold the entire storm event with 491.5 ft^3 to spare.

South containment

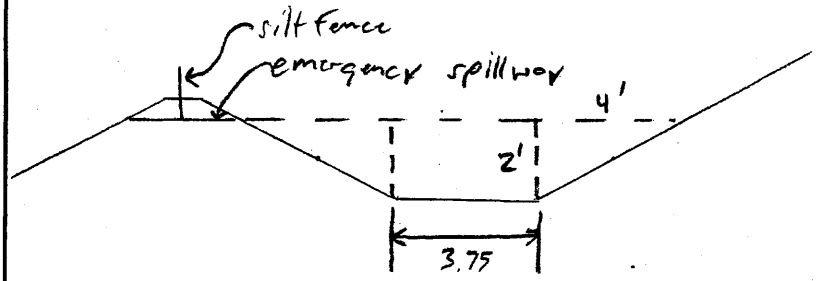

Containment area $= (2)(3.75) + (2)(4) = 15.5\ ft^2$

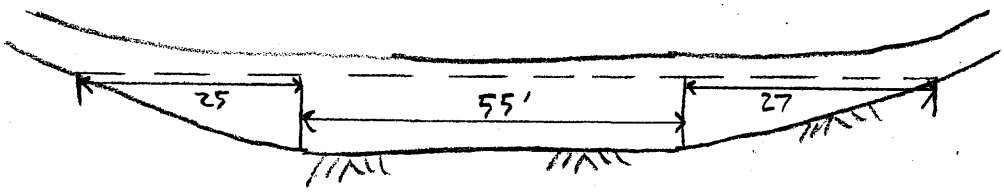

Containment vol. $= (55)(15.5') + \tfrac{1}{3}(25)(15.5) + \tfrac{1}{3}(27)(15.5) = 1121.0\ ft^3$

This side of the containment can handle well over half of the total runoff.

Subsoil Stockpile Sediment Control

Sediment control for the subsoil stockpile will be configured the same as for the topsoil stockpile. However, the subsoil will shed a greater percentage of the precipitation.

Assume hydrologic soil group C

$$CN = 87 \quad \text{(Dirt road)}$$

$$S = \frac{1000}{87} - 10 = 1.49$$

$$\text{Runoff depth} = \frac{(1.95 - 0.2(1.49))^2}{1.95 + 0.8(1.49)} = 0.87 \text{ in}$$

Stockpile Area = 43564 ft^2

$$\text{Runoff volume} = \frac{0.87}{12}(43564 ft^2) = 3158.4 \ ft^3$$

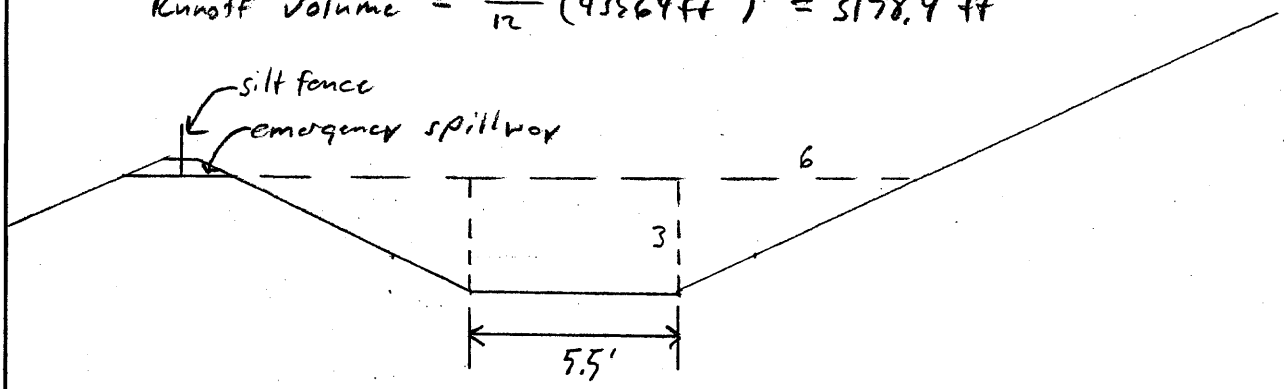

$$\text{Containment Area} = (5.5)(3) + (3)(6) = 34 ft^2$$

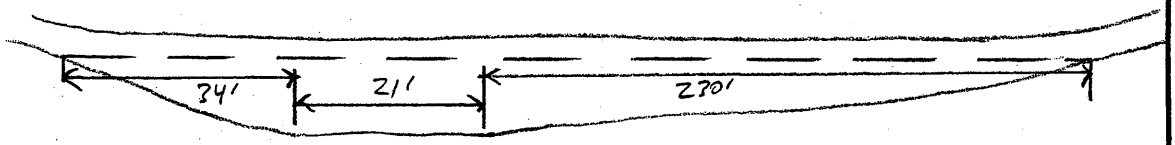

$$\text{Containment vol} = (21)(34) + \tfrac{1}{2}(34)(34) + \tfrac{1}{3}(230)(34) = 3899 \ ft^3$$

$3899 > 3158.4 \quad \therefore$ Adequate containment

RA ATTACHMENT 7-3, ADDENDUM A

TOPSOIL/SUBSOIL BORROW AREA

Borrow Area Hydrology

When the refuse pile is reclaimed some of the cover material will come from the soil borrow area. The soil borrow area will only be impacted during the short period during which the refuse pile is being reclaimed. Reclamation of the site will occur immediately after the required volume of soil has been removed. The soil borrow area is a little under a mile from the refuse pile. The site has a gentle 3 to 4% slope to the south towards an incised ephermeral channel flowing to the southeast. The site is dry with limited vegetation typical of the area, namely, sage brush and grasses. Climatological information for the area can be seen in Appendix 4-1 of the approved M&RP and in RA Attachment 7-5.

Soil in the area is easily erodible as demonstrated by the gullies running through the site with depths ranging between 6 and 20 feet. Gullies in the area are typically 8 to 10 feet deep. The 20 foot deep gully through the site indicates that soil has a depth of at least 20 feet. The following sections discuss how degradation of groundwater and surface water will be avoided during soil removal activities and reclamation.

Groundwater

The effect on groundwater from soil removal activities is expected to be minimal. No springs are evident at the soil borrow area or in areas upgradient of the soil borrow area. The deep gullies at the site are dry. Thus, it can be concluded that groundwater is at least below the deepest gully, which is approximately 20 feet deep. Thus, groundwater at the site is well below the 3 to 4 foot depth of soil to be removed from the site and therefore will not be encountered during soil removal activities. Based on the monitoring wells around the refuse pile the depth to groundwater in this area can be expected to be 30 to 40 feet below ground surface. Since the only activity at the site will be soil removal, there is very little potential for groundwater impact. Therefore groundwater quality will not be monitored.

Surface Water

All of the drainages in the vicinity of the soil borrow area are ephemeral in nature and only flow in response to large storm events and snow melt. Runoff from areas upgradient of the soil borrow area are collected into gullies before reaching the soil borrow area. These gullies convey runoff through the site with some runoff flowing into the gullies from the soil borrow area. The watershed upgradient of the site is less than 60 acres in size. Thus, the gullies at the site represent ephemeral drainages according to the definition of an ephemeral drainage in the regulations.

To protect the hydrologic balance, soil removal activities and reclamation activities will be conducted in a manner that prevents, to the extent possible, additional contributions of suspended solids to streamflow outside the permit area, and otherwise prevent water pollution. During soil removal activities and reclamation CFC will maintain adequate runoff- and sediment-control facilities to protect local surface waters.

Access to the soil borrow area will require the crossing of a channel. This channel flows only in

response to storm events or snow melt. A broad swale will be constructed to cross the drainage. Soil removal activities will only occur if the channel is dry. To facilitate removal of the soil and to reduce sediment from the swale, the swale may be covered with clean gravel. Soil removed to create the swale will be replaced to the extent possible during reclamation. However, the drainage has vertical sides in most places but the soil can only be replaced to a maximum slope of 2:1. The swale crossing will be reclaimed such that there are no sharp changes in slope or direction. The reclaimed slopes of the swale will be deep gouged and seeded following regrading. The reclaimed channel will have the same bottom width as the undisturbed channel and will be composed of the same material as the rest of the channel. The undisturbed channel is composed of the same soil as that being removed with an occasional rock. The reclaimed swale will be more stable than the undisturbed channel due to the side slopes being laid back rather than being vertical.

During soil removal and reclamation activities a combination of sediment control methods will be used. Before commencing any soil removal activities silt fences will be installed down gradient of any areas to be disturbed. After installation of the silt fences the top twelve inches of soil will be pushed into berms around the site. These berms will contain runoff that falls within the borrow area and will divert upgradient runoff around the borrow area. The removal of 3 to 4 feet of soil from the site will, by the nature of the activity, create a depression that will contain the runoff from inside the soil borrow area. The silt fences will be maintained during soil removal activities to provide sediment treatment in addition to the berms and depression.

To minimize the impact to the site the soil will be removed from between the gullies running through the site. Thus, the current drainage pattern will not be impacted by soil removal activities. The gullies on either side of the soil borrow area are much deeper than the expected soil excavation depth. Therefore, after 3 to 4 feet of soil is removed, the site will be regraded to drain towards the one of the existing gullies. By removing soil in this manner no reclamation drainages will need to be constructed.

During reclamation the silt fences will be removed during final grading. Once the silt fences are removed the site will be deep gouged, mulched and seeded as soon as possible. The silt fences will not be removed if a storm is expected in the time between when the silt fences are removed and when the site can be deep gouged. Deep gouging has been demonstrated to be very effective at controlling sediment from reclaimed sites, especially from relatively flat sites such as this. The deep gouges will also promote revegetation of the site.

RA ATTACHMENT 7-4

HYDROLOGY CALCULATIONS

REGISTERED PROFESSIONAL ENGINEER
1-23-06
No. 189797
LAYNE D.
JENSEN
STATE OF UTAH

RA ATTACHMENT 7-4

DIVERSION AND CULVERT DESIGN CALCULATIONS

REGISTERED PROFESSIONAL ENGINEER
2-11-05
No. 189797
LAYNE D.
JENSEN
STATE OF UTAH

Dugout Canyon Mine Refuse Pile
Hydrology Calculations

Rainfall Depths

Since this site is a refuse pile the 100-year storm event will be used for all calculations

100-year 6-hour	2.05 inches
100-year 24-hour	2.80 inches

Curve Number

This area was a gravel pit prior to being used as a refuse pile. Thus, the vast majority of the disturbed areas have no vegetation and little if any soil remaining. The entire site whether covered with waste rock or bare soil will behave like a dirt road. The typical curve number for dirt roads is 90.

The undisturbed portions of any watersheds are typically Pinyon/Juniper or Sagebrush/Grass vegetation type. The majority being Pinyon/Juniper. Undisturbed soils in the undisturbed watersheds have a hydrologic soil of B. Combining the vegetation type and hydrologic soil type the estimated curve number is 75.

Soil from the site and a borrow area will be used to reclaim the site. Although the native soils justify a lower curve number the uncertainty regarding the soil borrow source justifies a conservative choice of 80 for the reclaimed areas.

A summary of watershed characteristics can be found on the following pages.

Drainage Ditch Design

Assumptions

1. All ditches designed for the 100-yr 6-hr storm event,

2. When riprap is required the method presented by Searcy, (1967) will be used,

3. Riprap thickness is twice the D_{50},

4. A Mannings n of 0.03 will be assumed for bare earth,

5. A Mannings n of 0.035 will be assumed for rocky earth,

6. A Mannings n for riprap channels will be determined using the method presented by Abt, S.R., et. al. (1987)

$$n = 0.0456(D_{50} \times \text{Slope})^{0.159}$$

Where: D50 = median riprap size (inches)
Slope = (ft\ft)

7. A geotextile will be used beneath riprap for operational ditches,

8. A filter blanket will be used beneath the riprap for all reclamation channels. The filter thickness will be half of the riprap thickness.

Operational Ditches and Culvert

UD-1a

Contributing Watershed is Approximately 15% of UWS-1

Peak Flow = 4.74 x 0.15 = 0.71 cfs

Minimum Slope = 2.0%
Maximum Slope = 15.0%

Trapizoidal Ditch
Side slopes = 2:1
Depth = 1 ft
Bottom Width = 1 ft
Riprap = none

Maximum Velocity = 4.59 fps
Maximum Depth = 0.27 ft
Freeboard = 0.73 ft

See pages 22 and 23 for calculation sheets and page 56 for a typical cross-section of the ditch

UD-1b

Contributing Watershed is UWS-1

Peak Flow = 4.74 cfs

Minimum Slope = 0.3%
Maximum Slope = 2.8%

Trapizoidal Ditch
Side slopes = 2:1
Depth = 1.5 ft
Bottom Width = 2 ft
Riprap = none

Maximum Velocity = 3.92 fps
Maximum Depth = 0.87 ft
Freeboard = 0.63 ft

See pages 24 and 25 for calculation sheets and page 57 for a typical cross-section of the ditch

UD-1c

Contributing Watershed is UWS-1

Peak Flow = 4.74 cfs
Minimum Slope = 4.4%
Maximum Slope = 23.3%

Trapizoidal Ditch
Side slopes = 2:1
Depth = 1.0 ft
Bottom Width = 2.0 ft
Riprap = 6 inch

Maximum Velocity = 6.26 fps
Maximum Depth = 0.5 ft
Freeboard = 0.5 ft

See pages 26 and 27 for calculation sheets and page 58 for a typical cross-section of the ditch

A single watershed has been defined for the area draining to the sediment pond. Since the refuse pile may slope in different directions during construction ditches DD-1 and DD-2 may receive most of the runoff. Thus, both ditches will be designed to handle the majority of the runoff from the upper part of the watershed.

DD-1

Contributing Watershed is Approximately 80% of DWS-1

Peak Flow = 16.03 x 0.8 = 12.82 cfs
Minimum Slope = 0.6%
Maximum Slope = 12.9%

Trapizoidal Ditch
Side slopes = 2:1
Depth = 1.5 ft
Bottom Width = 4 ft
Riprap = 6 inch on slopes exceeding a slope of 4%. A few places have short areas with slopes exceeding 4%, these areas will need to be riprapped.

Maximum Velocity = 6.22 fps
Maximum Depth = 0.96 ft
Freeboard = 0.54 ft

See pages 28, 29, and 30 for calc sheets and page 59 and 60 for a typ. cross-section of the ditch

DD-2a

Contributing Watershed is Approximately 50% of DWS-1

Peak Flow = 16.03 x 0.5 = 8.02 cfs

Minimum Slope = 1.9%
Maximum Slope = 10.0%

Trapizoidal Ditch
Side slopes = 2:1
Depth = 1 ft
Bottom Width = 15 ft
Riprap = none

Maximum Velocity = 4.03 fps
Maximum Depth = 0.22 ft
Freeboard = 0.78 ft

See pages 31 and 32 for calculation sheets and page 61 for a typical cross-section of the ditch

DD-2b

Contributing Watershed is Approximately 50% of DWS-1

Peak Flow = 16.03 x 0.5 = 8.02 cfs

Minimum Slope = 5.0%
Maximum Slope = 13.5%

Trapizoidal Ditch
Side slopes = 2:1
Depth = 1 ft
Bottom Width = 4 ft
Riprap = 6 inch

Maximum Velocity = 5.57 fps
Maximum Depth = 0.41 ft
Freeboard = 0.59 ft

See pages 33 and 34 for calculation sheets and page 62 for a typical cross-section of the ditch

DD-3a

Contributing Watershed is DWS-1

Peak Flow = 16.03 x 1.0 = 16.03 cfs

Minimum Slope = 1.3%
Maximum Slope = 3.5%

Trapizoidal Ditch
Side slopes = 2:1
Depth = 1.0 ft
Bottom Width = 15.0 ft
Riprap = none

Maximum Velocity = 3.84 fps
Maximum Depth = 0.37 ft
Freeboard = 0.63 ft

See pages 35 and 36 for calculation sheets and page 63 for a typical cross-section of the ditch

DD-3b

Contributing Watershed is DWS-1

Peak Flow = 16.03 x 1.0 = 16.03 cfs

Minimum Slope = 1.3%
Maximum Slope = 9.0%

Trapizoidal Ditch
Side slopes = 2:1
Depth = 1.5 ft
Bottom Width = 2.0 ft
Riprap = 6 inch

Maximum Velocity = 7.28 fps
Maximum Depth = 1.03 ft
Freeboard = 0.47 ft

See pages 37 and 38 for calculation sheets and page 64 for a typical cross-section of the ditch

Culvert

UC-1

Culvert Diameter = 24 inches

Contributing Watershed = UWS-1

Peak Flow = 4.74 cfs

Culvert Slope = 4.5 %

Culvert inlet capacity = 11.9 cfs (projecting inlet)

Culvert capacity based on culvert slope = 26.11 cfs

Culvert capacity is controlled by the inlet. However, the inlet capacity is still over twice the peak flow from the 100-year 6-hour.

Outlet velocity = 6.31 fps thus outlet protection is needed (pg 39)

Place D_{50} = 6 inch riprap at the outlet for outlet protection

UC-2

Culvert Diameter = 24 inches

Contributing Watershed = UWS-2

Peak Flow = 6.78 cfs

Culvert Slope = 1.5 %

Culvert inlet capacity = 11.9 cfs (projecting inlet)

Culvert capacity based on culvert slope = 15.01 cfs

Culvert capacity is controlled by the inlet. However, the inlet capacity is still over twice the peak flow from the 100-year 6-hour.

Outlet velocity = 4.66 fps thus outlet protection is not needed (pg 40)

mod 1-06

RECLAMATION CHANNELS

RD-1a

Contributing Watershed is Approximately 15% of RWS-1

Peak Flow = 6.55 x 0.15 = 0.98 cfs

Minimum Slope = 4.86%
Maximum Slope = 13.59%

Trapizoidal Ditch
Side slopes = 2:1
Depth = 1 ft
Bottom Width = 1 ft
Riprap = none

Maximum Velocity = 4.46 fps
Maximum Depth = 0.27 ft
Freeboard = 0.73 ft

See pages 41 and 42 for calculation sheets and page 65 for a typical cross-section of the ditch

RD-1b

Contributing Watershed is 85% of RWS-1

Peak Flow = 6.55 x 0.85 = 5.57 cfs

Minimum Slope = 0.68%
Maximum Slope = 3.24%

Trapizoidal Ditch
Side slopes = 2:1
Depth = 1.25 ft
Bottom Width = 3 ft
Riprap = none

Maximum Velocity = 4.28 fps
Maximum Depth = 0.66 ft
Freeboard = 0.59 ft

See pages 43 and 44 for calculation sheets and page 66 for a typical cross-section of the ditch

RD-1c

Contributing Watershed is RWS-1

Peak Flow = 6.55 cfs
Minimum Slope = 4.4%
Maximum Slope = 23.3%

Trapizoidal Ditch
Side slopes = 2:1
Depth = 1.25 ft
Bottom Width = 2.0 ft
Riprap = 6 inch

Maximum Velocity = 6.97 fps
Maximum Depth = 0.61 ft
Freeboard = 0.64 ft

See pages 45 and 46 for calculation sheets and page 67 for a typical cross-section of the ditch

RD-2

Contributing Watershed is RWS-2

Peak Flow = 0.59 cfs
Minimum Slope = 1.77%
Maximum Slope = 17.24%

Trapizoidal Ditch
Side slopes = 2:1
Depth = 1.0 ft
Bottom Width = 1 ft
Riprap = none

Maximum Velocity = 4.07 fps
Maximum Depth = 0.27 ft
Freeboard = 0.73 ft

See pages 47 and 48 for calculation sheets and page 68 for a typical cross-section of the ditch

mod 1-06

RD-3

Contributing Watershed is RWS-3

Peak Flow = 1.47 cfs
Minimum Slope = 15.38%
Maximum Slope = 31.80%

Trapizoidal Ditch
Side slopes = 2:1
Depth = 1.0 ft
Bottom Width = 2.0 ft
Riprap = 3"

Maximum Velocity = 4.79 fps
Maximum Depth = 0.17 ft
Freeboard = 0.83 ft

See pages 49 and 50 for calculation sheets and page 69 for a typical cross-section of the ditch

RD-4

Contributing Watershed is RWS-4

Peak Flow = 0.50 cfs
Minimum Slope = 3.25%
Maximum Slope = 11.44%

Trapizoidal Ditch
Side slopes = 2:1
Depth = 1.0 ft
Bottom Width = 1.0 ft
Riprap = none

Maximum Velocity = 3.36 fps
Maximum Depth = 0.21 ft
Freeboard = 0.79 ft

See pages 51 and 52 for calculation sheets and page 70 for a typical cross-section of the ditch

RD-5

Contributing Watershed is RWS-5

Peak Flow = 6.87 cfs
Minimum Slope = 1.7 %
Maximum Slope = 2.4 %

Trapizoidal Ditch
Side slopes = 2:1
Depth = 1.0 ft
Bottom Width = 3.0 ft
Riprap = none

Maximum Velocity = 4.16 fps
Maximum Depth = 0.56 ft
Freeboard = 0.44 ft

See pages 53 and 54 for calculation sheets and page 71 for a typical cross-section of the ditch

Swale 1

Contributing Watershed is RWS-1

Peak Flow = 6.36 cfs
Slope = 3.6%

Trapizoidal Ditch
Side slopes = 4:1
Depth = 1.0 ft
Bottom Width = 3.0 ft
Riprap = none

Maximum Velocity = 4.66 fps
Maximum Depth = 0.44 ft
Freeboard = 0.56 ft

See page 55 for calculation sheets and page 72 for a typical cross-section of the ditch

Summary of Watershed Data

Watershed Area	Drainage Area (ac)	Curve Number	S (in)	Y (%)	l (ft)	L (hr)	Time of Conc. (hr)	Peak Flow (cfs)
Operational Watersheds								
DWS-1	14.8	90	1.111	25.5	700	0.033	0.055	16.03
UWS-1	18	75	3.333	11	1500	0.154	0.257	4.74
UWS-2	25.5	75	3.333	18.4	1975	0.148	0.248	6.78
Reclamation Watersheds								
RWS-1	21.2	76	3.158	13.2	1500	0.136	0.228	6.55
RWS-2	1	80	2.500	20.3	260	0.024	0.040	0.59
RWS-3	2.6	80	2.500	21	510	0.040	0.068	1.47
RWS-4	0.87	80	2.500	19.9	330	0.029	0.049	0.5
RWS-5	26.1	75	3.333	18.4	2060	0.153	0.256	6.87

Notes

Watershed locations can be found on Plates RA7-1 and RA7-3
S = 1000/CN - 10
Y = average watershed slope = (length of contour lines)(contour interval)/(watershed area)
l = hydraulic length
L = watershed lag =(l^0.8(S+1)^0.7) / (1900(Y)^0.5)
Time of Concentration + 1.67L
Peak Flow is based on a 100-yr 6-hr storm event

12
mod 1-06

Triangular Hydrograph Calculations using

SCSHYDRO Program

Watershed I.D.:
DWS-1 100-yr 6-hr

INPUT SUMMARY

STORM :	WATERSHED :
Dist.= SCS Type `b'	Area = 14.80 acres
Depth = 2.05 inches	CN = 90.00
Duration = 6.0 hrs	Time conc.= 0.06 hrs

OUTPUT SUMMARY

Runoff depth: 1.137 inches
Initial abstr: 0.222 inches
Peak flow: 16.03 cfs (1.074 iph)
at time: 2.508 hrs

Triangular Hydrograph Calculations using

SCSHYDRO Program

Watershed I.D.:
UWS-1 100-yr 6-hr

INPUT SUMMARY

STORM :	WATERSHED :
Dist.= SCS Type `b'	Area = 18.00 acres
Depth = 2.05 inches	CN = 75.00
Duration = 6.0 hrs	Time conc.= 0.26 hrs

OUTPUT SUMMARY

Runoff depth: 0.406 inches
Initial abstr: 0.667 inches
Peak flow: 4.74 cfs (0.261 iph)
at time: 2.639 hrs

Triangular Hydrograph Calculations using

SCSHYDRO Program

Watershed I.D.:
UWS-2

INPUT SUMMARY

STORM :	WATERSHED :
Dist.= SCS Type `b'	Area = 25.50 acres
Depth = 2.05 inches	CN = 75.00
Duration = 6.0 hrs	Time conc.= 0.25 hrs

OUTPUT SUMMARY

Runoff depth: 0.406 inches
Initial abstr: 0.667 inches
Peak flow: 6.78 cfs (0.264 iph)
at time: 2.612 hrs

16
mod 1-06

Triangular Hydrograph Calculations using

SCSHYDRO Program

Watershed I.D.:
RWS-1 100-YEAR 6-HOUR

INPUT SUMMARY

STORM :	WATERSHED :
Dist.= SCS Type `b'	Area = 21.20 acres
Depth = 2.05 inches	CN = 76.00
Duration = 6.0 hrs	Time conc.= 0.23 hrs

OUTPUT SUMMARY

Runoff depth: 0.440 inches
Initial abstr: 0.632 inches
Peak flow: 6.55 cfs (0.306 iph)
at time: 2.614 hrs

Triangular Hydrograph Calculations using

SCSHYDRO Program

Watershed I.D.:
RWS-2 100-YEAR 6-HOUR

INPUT SUMMARY

STORM :	WATERSHED :
Dist.= SCS Type `b'	Area = 1.00 acres
Depth = 2.05 inches	CN = 80.00
Duration = 6.0 hrs	Time conc.= 0.04 hrs

OUTPUT SUMMARY

Runoff depth: 0.593 inches
Initial abstr: 0.500 inches
Peak flow: 0.59 cfs (0.581 iph)
at time: 2.507 hrs

Triangular Hydrograph Calculations using

SCSHYDRO Program

Watershed I.D.:
RWS-3 100-YEAR 6-HOUR

INPUT SUMMARY

STORM :	WATERSHED :
Dist.= SCS Type `b'	Area = 2.60 acres
Depth = 2.05 inches	CN = 80.00
Duration = 6.0 hrs	Time conc.= 0.07 hrs

OUTPUT SUMMARY

Runoff depth: 0.593 inches
Initial abstr: 0.500 inches
Peak flow: 1.47 cfs (0.562 iph)
at time: 2.511 hrs

Triangular Hydrograph Calculations using

SCSHYDRO Program

Watershed I.D.:
RWS-4 100-YEAR 6-HOUR

INPUT SUMMARY

STORM :	WATERSHED :
Dist.= SCS Type `b'	Area = 0.87 acres
Depth = 2.05 inches	CN = 80.00
Duration = 6.0 hrs	Time conc.= 0.05 hrs

OUTPUT SUMMARY

Runoff depth: 0.593 inches
Initial abstr: 0.500 inches
Peak flow: 0.50 cfs (0.574 iph)
at time: 2.509 hrs

Page Intentionally Left Blank

Triangular Hydrograph Calculations using

SCSHYDRO Program

Watershed I.D.:
RWS-5

INPUT SUMMARY

STORM :	WATERSHED :
Dist.= SCS Type `b'	Area = 26.10 acres
Depth = 2.05 inches	CN = 75.00
Duration = 6.0 hrs	Time conc.= 0.26 hrs

OUTPUT SUMMARY

Runoff depth: 0.406 inches
Initial abstr: 0.667 inches
Peak flow: 6.87 cfs (0.261 iph)
at time: 2.628 hrs

UD-1a Minimum Slope
Worksheet for Trapezoidal Channel

Project Description	
Worksheet	Dugout Refuse F
Flow Element	Trapezoidal Cha
Method	Manning's Formı
Solve For	Channel Depth

Input Data		
Mannings Coeffic	0.030	bare earth
Slope	.020000	ft/ft
Left Side Slope	2.00	V : H
Right Side Slope	2.00	V : H
Bottom Width	1.00	ft
Discharge	0.71	cfs

Results		
Depth	0.27	ft <1' ∴ ok freeboard 0.73'
Flow Area	0.3	ft²
Wetted Perim	1.60	ft
Top Width	1.27	ft
Critical Depth	0.24	ft
Critical Slope	0.029060	ft/ft
Velocity	2.32	ft/s
Velocity Head	0.08	ft
Specific Energ	0.35	ft
Froude Numb	0.83	
Flow Type	Subcritical	

© Haestad Methods, Inc.
EarthFax Engineering Inc
37 Brookside Road Waterbury, CT 06708 USA (203) 755-1666

UD-1a Maximum Slope
Worksheet for Trapezoidal Channel

Project Description	
Worksheet	Dugout Refuse F
Flow Element	Trapezoidal Cha
Method	Manning's Form
Solve For	Channel Depth

Input Data		
Mannings Coeffic	0.030	bare earth
Slope	0.150000	ft/ft
Left Side Slope	2.00	V : H
Right Side Slope	2.00	V : H
Bottom Width	1.00	ft
Discharge	0.71	cfs

Results		
Depth	0.14	ft
Flow Area	0.2	ft²
Wetted Perim	1.32	ft
Top Width	1.14	ft
Critical Depth	0.24	ft
Critical Slope	0.029060	ft/ft
Velocity	4.59	ft/s < 5fps ∴ no riprap
Velocity Head	0.33	ft
Specific Energ	0.47	ft
Froude Numb	2.20	
Flow Type	Supercritical	

UD-1b Minimum Slope
Worksheet for Trapezoidal Channel

Project Description	
Worksheet	Dugout Refuse F
Flow Element	Trapezoidal Cha
Method	Manning's Form
Solve For	Channel Depth

Input Data		
Mannings Coeffic	0.030	bare earth
Slope	0.003000	ft/ft
Left Side Slope	2.00	V : H
Right Side Slope	2.00	V : H
Bottom Width	2.00	ft
Discharge	3.79	cfs

Results		
Depth	0.87	ft < 1.5' ∴ ok freeboard = 0.63 ft
Flow Area	2.1	ft²
Wetted Perim	3.94	ft
Top Width	2.87	ft
Critical Depth	0.46	ft
Critical Slope	0.023150	ft/ft
Velocity	1.79	ft/s
Velocity Head	0.05	ft
Specific Energ	0.92	ft
Froude Numb	0.37	
Flow Type	Subcritical	

© Haestad Methods, Inc.
EarthFax Engineering Inc
37 Brookside Road Waterbury, CT 06708 USA (203) 755-1666

UD-1b Maximum Slope
Worksheet for Trapezoidal Channel

Project Description	
Worksheet	Dugout Refuse I
Flow Element	Trapezoidal Cha
Method	Manning's Form
Solve For	Channel Depth

Input Data		
Mannings Coeffic	0.030	
Slope	0.028000	ft/ft
Left Side Slope	2.00	V : H
Right Side Slope	2.00	V : H
Bottom Width	2.00	ft
Discharge	3.79	cfs

Results		
Depth	0.44	ft
Flow Area	1.0	ft²
Wetted Perim	2.98	ft
Top Width	2.44	ft
Critical Depth	0.46	ft
Critical Slope	0.023150	ft/ft
Velocity	3.92	ft/s < 5 fps ∴ no riprap
Velocity Head	0.24	ft
Specific Energ	0.67	ft
Froude Numb	1.10	
Flow Type	Supercritical	

© Haestad Methods, Inc.
EarthFax Engineering Inc
37 Brookside Road Waterbury, CT 06708 USA (203) 755-1666

UD-1c Minimum Slope
Worksheet for Trapezoidal Channel

Project Description	
Worksheet	Dugout Refuse I
Flow Element	Trapezoidal Cha
Method	Manning's Formı
Solve For	Channel Depth

Input Data		
Mannings Coeffic	0.037	$D_{50} = 6''$ Slope = 4.4%
Slope	044000	ft/ft
Left Side Slope	2.00	V : H
Right Side Slope	2.00	V : H
Bottom Width	2.00	ft
Discharge	4.74	cfs

Results		
Depth	0.50	ft < 1.0 ft ∴ ok
Flow Area	1.1	ft²
Wetted Perim	3.11	ft
Top Width	2.50	ft
Critical Depth	0.53	ft
Critical Slope	0.034748	ft/ft
Velocity	4.25	ft/s
Velocity Head	0.28	ft
Specific Energ	0.78	ft
Froude Numb	1.12	
Flow Type	Supercritical	

UD-1c Maximum Slope
Worksheet for Trapezoidal Channel

Project Description	
Worksheet	Dugout Refuse I
Flow Element	Trapezoidal Cha
Method	Manning's Form
Solve For	Channel Depth

Input Data		
Mannings Coeffic	0.048	D_{50} = 6" Slope = 23.3%
Slope	233000	ft/ft
Left Side Slope	2.00	V : H
Right Side Slope	2.00	V : H
Bottom Width	2.00	ft
Discharge	4.74	cfs

Results		
Depth	0.35	ft
Flow Area	0.8	ft²
Wetted Perim	2.78	ft
Top Width	2.35	ft
Critical Depth	0.53	ft
Critical Slope	0.058969	ft/ft
Velocity	6.26	ft/s < 7.5 fps ∴ ok
Velocity Head	0.61	ft
Specific Energ	0.96	ft
Froude Numb	1.94	
Flow Type	Supercritical	

© Haestad Methods, Inc.
EarthFax Engineering Inc
37 Brookside Road Waterbury, CT 06708 USA (203) 755-1666

DD-1 Min Slope
Worksheet for Trapezoidal Channel

Project Description	
Worksheet	Dugout Refuse F
Flow Element	Trapezoidal Cha
Method	Manning's Formi
Solve For	Channel Depth

Input Data		
Mannings Coeffic	0.035	rocky earth
Slope	006000	ft/ft
Left Side Slope	2.00	V : H
Right Side Slope	2.00	V : H
Bottom Width	4.00	ft
Discharge	11.22	cfs

Results		
Depth	0.96	ft < 1.5' ∴ ok freeboard = 0.54'
Flow Area	4.3	ft²
Wetted Perim	6.16	ft
Top Width	4.96	ft
Critical Depth	0.61	ft
Critical Slope	0.026358	ft/ft
Velocity	2.60	ft/s
Velocity Head	0.10	ft
Specific Energ	1.07	ft
Froude Numb	0.49	
Flow Type	Subcritical	

DD-1 Max Slope
Worksheet for Trapezoidal Channel

Project Description	
Worksheet	Dugout Refuse I
Flow Element	Trapezoidal Cha
Method	Manning's Formi
Solve For	Channel Depth

Input Data		
Mannings Coeffic	0.044	$D_{50} = 6''$
Slope	129000	ft/ft
Left Side Slope	2.00	V : H
Right Side Slope	2.00	V : H
Bottom Width	4.00	ft
Discharge	11.22	cfs

Results		
Depth	0.43	ft
Flow Area	1.8	ft²
Wetted Perim	4.96	ft
Top Width	4.43	ft
Critical Depth	0.61	ft
Critical Slope	0.041091	ft/ft
Velocity	6.22	ft/s < 7.5 fps ∴ ok
Velocity Head	0.60	ft
Specific Energ	1.03	ft
Froude Numb	1.72	
Flow Type	Supercritical	

© Haestad Methods, Inc.
EarthFax Engineering Inc
37 Brookside Road Waterbury, CT 06708 USA (203) 755-1666

DD-1 Max Slope Not Requireing Riprap
Worksheet for Trapezoidal Channel

Project Description	
Worksheet	Dugout Refuse I
Flow Element	Trapezoidal Cha
Method	Manning's Form
Solve For	Channel Depth

Input Data		
Mannings Coeffic	0.035	rocky soil
Slope	040000	ft/ft
Left Side Slope	2.00	V : H
Right Side Slope	2.00	V : H
Bottom Width	4.00	ft
Discharge	11.22	cfs

all channel sections with a slope greater than 4% will need $D_{50} = 6''$ riprap

Results		
Depth	0.54	ft
Flow Area	2.3	ft²
Wetted Perim	5.20	ft
Top Width	4.54	ft
Critical Depth	0.61	ft
Critical Slope	0.026358	ft/ft
Velocity	4.91	ft/s < 5 fps
Velocity Head	0.37	ft
Specific Energ	0.91	ft
Froude Numb	1.22	
Flow Type	Supercritical	

DD-2a Minimum Slope
Worksheet for Trapezoidal Channel

Project Description	
Worksheet	Dugout Refuse I
Flow Element	Trapezoidal Cha
Method	Manning's Formı
Solve For	Channel Depth

Input Data		
Mannings Coeffic	0.030	bare earth/coal refuse
Slope	019000	ft/ft
Left Side Slope	2.00	V : H
Right Side Slope	2.00	V : H
Bottom Width	15.00	ft
Discharge	8.02	cfs

Results		
Depth	0.22	ft < 2' ∴ ok
Flow Area	3.3	ft²
Wetted Perim	15.49	ft
Top Width	15.22	ft
Critical Depth	0.21	ft
Critical Slope	0.022733	ft/ft
Velocity	2.43	ft/s
Velocity Head	0.09	ft
Specific Energ	0.31	ft
Froude Numb	0.92	
Flow Type	Subcritical	

DD-2a Maximum Slope
Worksheet for Trapezoidal Channel

Project Description	
Worksheet	Dugout Refuse I
Flow Element	Trapezoidal Cha
Method	Manning's Form
Solve For	Channel Depth

Input Data		
Mannings Coeffic	0.030	bare earth / coal refuse
Slope	100000	ft/ft
Left Side Slope	2.00	V : H
Right Side Slope	2.00	V : H
Bottom Width	15.00	ft The ditch is also the access road for the sediment pond.
Discharge	8.02	cfs

Results		
Depth	0.13	ft
Flow Area	2.0	ft²
Wetted Perim	15.30	ft
Top Width	15.13	ft
Critical Depth	0.21	ft
Critical Slope	0.022733	ft/ft
Velocity	4.03	ft/s < 5.0 fps ∴ no riprap
Velocity Head	0.25	ft
Specific Energ	0.38	ft
Froude Numb	1.96	
Flow Type	Supercritical	

DD-2b Minimum Slope
Worksheet for Trapezoidal Channel

Project Description	
Worksheet	Dugout Refuse I
Flow Element	Trapezoidal Cha
Method	Manning's Form
Solve For	Channel Depth

Input Data		
Mannings Coeffic	0.038	D_{50} = 6" slope = 5%
Slope	050000	ft/ft
Left Side Slope	2.00	V : H
Right Side Slope	2.00	V : H
Bottom Width	4.00	ft
Discharge	8.02	cfs

Results		
Depth	0.43	ft < 1.0 ft ∴ ok
Flow Area	1.8	ft²
Wetted Perim	4.95	ft
Top Width	4.43	ft
Critical Depth	0.49	ft
Critical Slope	0.031690	ft/ft
Velocity	4.48	ft/s
Velocity Head	0.31	ft
Specific Energ	0.74	ft
Froude Numb	1.24	
Flow Type	Supercritical	

DD-2b Maximum Slope
Worksheet for Trapezoidal Channel

Project Description	
Worksheet	Dugout Refuse F
Flow Element	Trapezoidal Cha
Method	Manning's Form
Solve For	Channel Depth

Input Data		
Mannings Coeffic	0.044	$D_{50} = 6''$ slope = 13.5%
Slope	135000	ft/ft
Left Side Slope	2.00	V : H
Right Side Slope	2.00	V : H
Bottom Width	4.00	ft
Discharge	8.02	cfs

Results		
Depth	0.35	ft
Flow Area	1.4	ft²
Wetted Perim	4.77	ft
Top Width	4.35	ft
Critical Depth	0.49	ft
Critical Slope	0.043363	ft/ft
Velocity	5.57	ft/s < 7.5 fps ∴ ok
Velocity Head	0.48	ft
Specific Energ	0.83	ft
Froude Numb	1.71	
Flow Type	Supercritical	

DD-3a Minimum Slope
Worksheet for Trapezoidal Channel

Project Description	
Worksheet	Dugout Refuse I
Flow Element	Trapezoidal Cha
Method	Manning's Form
Solve For	Channel Depth

Input Data		
Mannings Coeffic	0.030	bare earth
Slope	013000	ft/ft
Left Side Slope	2.00	V : H
Right Side Slope	2.00	V : H
Bottom Width	15.00	ft
Discharge	16.03	cfs

Results		
Depth	0.37	ft < 1.0 ∴ ok
Flow Area	5.6	ft²
Wetted Perim	15.83	ft
Top Width	15.37	ft
Critical Depth	0.33	ft
Critical Slope	0.019771	ft/ft
Velocity	2.84	ft/s
Velocity Head	0.13	ft
Specific Energ	0.50	ft
Froude Numb	0.83	
Flow Type	Subcritical	

© Haestad Methods, Inc.
EarthFax Engineering Inc
37 Brookside Road Waterbury, CT 06708 USA (203) 755-1666

DD-3a Maximum Slope
Worksheet for Trapezoidal Channel

Project Description	
Worksheet	Dugout Refuse I
Flow Element	Trapezoidal Cha
Method	Manning's Form
Solve For	Channel Depth

Input Data			
Mannings Coeffic	0.030	bare earth	
Slope	035000	ft/ft	
Left Side Slope	2.00	V : H	
Right Side Slope	2.00	V : H	
Bottom Width	15.00	ft	
Discharge	16.03	cfs	

Results			
Depth	0.28	ft	
Flow Area	4.2	ft²	
Wetted Perim	15.62	ft	
Top Width	15.28	ft	
Critical Depth	0.33	ft	
Critical Slope	0.019771	ft/ft	
Velocity	3.84	ft/s	< 5.0 fps ∴ ok
Velocity Head	0.23	ft	
Specific Energ	0.51	ft	
Froude Numb	1.30		
Flow Type	Supercritical		

DD-3b Minimum Slope
Worksheet for Trapezoidal Channel

Project Description	
Worksheet	Dugout Refuse F
Flow Element	Trapezoidal Cha
Method	Manning's Formı
Solve For	Channel Depth

Input Data		
Mannings Coeffic	0.037	$D_{50} = 6''$ Slope = 4.6%
Slope	046000	ft/ft
Left Side Slope	2.00	V : H
Right Side Slope	2.00	V : H
Bottom Width	2.00	ft
Discharge	16.03	cfs

Results		
Depth	1.03	ft < 1.5' ∴ ok
Flow Area	2.6	ft²
Wetted Perim	4.31	ft
Top Width	3.03	ft
Critical Depth	1.14	ft
Critical Slope	0.033467	ft/ft
Velocity	6.15	ft/s
Velocity Head	0.59	ft
Specific Energ	1.62	ft
Froude Numb	1.17	
Flow Type	Supercritical	

DD-3b Maximum Slope
Worksheet for Trapezoidal Channel

Project Description	
Worksheet	Dugout Refuse I
Flow Element	Trapezoidal Cha
Method	Manning's Form
Solve For	Channel Depth

Input Data		
Mannings Coeffic	0.041	D_{50} = 6" Slope = 9.1%
Slope	091000	ft/ft
Left Side Slope	2.00	V : H
Right Side Slope	2.00	V : H
Bottom Width	2.00	ft
Discharge	16.03	cfs

Results		
Depth	0.90	ft
Flow Area	2.2	ft²
Wetted Perim	4.01	ft
Top Width	2.90	ft
Critical Depth	1.14	ft
Critical Slope	0.041698	ft/ft
Velocity	7.28	ft/s < 7.5 fps ∴ ok
Velocity Head	0.82	ft
Specific Energ	1.72	ft
Froude Numb	1.47	
Flow Type	Supercritical	

© Haestad Methods, Inc.
EarthFax Engineering Inc
37 Brookside Road Waterbury, CT 06708 USA (203) 755-1666

UC-1
Worksheet for Circular Channel

Project Description	
Worksheet	Dugout Refuse
Flow Element	Circular Channe
Method	Manning's Form
Solve For	Channel Depth

Input Data		
Mannings Coeffic	0.024	
Slope	045400	ft/ft
Diameter	24	in
Discharge	4.74	cfs

Results			
Depth	0.58	ft	< 2.0' ∴ ok
Flow Area	0.8	ft²	
Wetted Perime	2.27	ft	
Top Width	1.81	ft	
Critical Depth	0.77	ft	
Percent Full	28.9	%	
Critical Slope	0.015456	ft/ft	
Velocity	6.31	ft/s	> 5 fps ∴ riprap is needed
Velocity Head	0.62	ft	
Specific Energ	1.20	ft	
Froude Numbe	1.73		
Maximum Disc	28.08	cfs	
Discharge Full	26.11	cfs	
Slope Full	0.001496	ft/ft	
Flow Type	Supercritical		

UC-2
Worksheet for Circular Channel

Project Description	
Worksheet	Dugout Refuse
Flow Element	Circular Channe
Method	Manning's Form
Solve For	Channel Depth

Input Data		
Mannings Coeffic	0.024	
Slope	015000	ft/ft
Diameter	24	in
Discharge	6.78	cfs

Results		
Depth	0.94	ft < 2' ∴ ok
Flow Area	1.5	ft²
Wetted Perime	3.03	ft
Top Width	2.00	ft
Critical Depth	0.92	ft
Percent Full	47.1	%
Critical Slope	0.016113	ft/ft
Velocity	4.66	ft/s < 5.0 fps ∴ no riprap
Velocity Head	0.34	ft
Specific Energ	1.28	ft
Froude Numbe	0.96	
Maximum Disc	16.14	cfs
Discharge Full	15.01	cfs
Slope Full	0.003062	ft/ft
Flow Type	Subcritical	

© Haestad Methods, Inc.
EarthFax Engineering Inc
37 Brookside Road Waterbury, CT 06708 USA (203) 755-1666

41
mod 1-06

RD-1a Minimum Slope
Worksheet for Trapezoidal Channel

Project Description	
Worksheet	Refuse Pile Rec
Flow Element	Trapezoidal Cha
Method	Manning's Formı
Solve For	Channel Depth

Input Data		
Mannings Coeffic	0.035	Rocky Earth
Slope	048600	ft/ft
Left Side Slope	2.00	V : H
Right Side Slope	2.00	V : H
Bottom Width	1.00	ft
Discharge	0.98	cfs

Results		
Depth	0.27	ft <1.0'. ok
Flow Area	0.3	ft²
Wetted Perim	1.61	ft
Top Width	1.27	ft
Critical Depth	0.29	ft
Critical Slope	0.038867	ft/ft
Velocity	3.13	ft/s
Velocity Head	0.15	ft
Specific Energ	0.43	ft
Froude Numb	1.12	
Flow Type	Supercritical	

42
mod 1-06

RD-1a Maximum Slope
Worksheet for Trapezoidal Channel

Project Description	
Worksheet	Refuse Pile Rec
Flow Element	Trapezoidal Cha
Method	Manning's Form
Solve For	Channel Depth

Input Data		
Mannings Coeffic	0.035	Rocky Earth
Slope	135900	ft/ft
Left Side Slope	2.00	V : H
Right Side Slope	2.00	V : H
Bottom Width	1.00	ft
Discharge	0.98	cfs

Results		
Depth	0.20	ft
Flow Area	0.2	ft²
Wetted Perim	1.45	ft
Top Width	1.20	ft
Critical Depth	0.29	ft
Critical Slope	0.038866	ft/ft
Velocity	4.46	ft/s < 5.0 fps ∴ ok
Velocity Head	0.31	ft
Specific Energ	0.51	ft
Froude Numb	1.84	
Flow Type	Supercritical	

43
mod 1-06

RD-1b Minimum Slope
Worksheet for Trapezoidal Channel

Project Description	
Worksheet	Refuse Pile Rec
Flow Element	Trapezoidal Cha
Method	Manning's Form
Solve For	Channel Depth

Input Data		
Mannings Coeffic	0.030	bare ground
Slope	006800	ft/ft
Left Side Slope	2.00	V : H
Right Side Slope	2.00	V : H
Bottom Width	3.00	ft
Discharge	5.57	cfs

Results		
Depth	0.66	ft < 1.25' ok
Flow Area	2.2	ft²
Wetted Perim	4.47	ft
Top Width	3.66	ft
Critical Depth	0.46	ft
Critical Slope	0.021275	ft/ft
Velocity	2.54	ft/s
Velocity Head	0.10	ft
Specific Energ	0.76	ft
Froude Numb	0.58	
Flow Type	Subcritical	

RD-1b Maximum Slope
Worksheet for Trapezoidal Channel

Project Description	
Worksheet	Refuse Pile Rec
Flow Element	Trapezoidal Cha
Method	Manning's Form
Solve For	Channel Depth

Input Data			
Mannings Coeffic	0.030		bare ground
Slope	032400	ft/ft	
Left Side Slope	2.00	V : H	
Right Side Slope	2.00	V : H	
Bottom Width	3.00	ft	
Discharge	5.57	cfs	

Results			
Depth	0.41	ft	
Flow Area	1.3	ft²	
Wetted Perim	3.91	ft	
Top Width	3.41	ft	
Critical Depth	0.46	ft	
Critical Slope	0.021275	ft/ft	
Velocity	4.28	ft/s	< 5.0 fps
Velocity Head	0.28	ft	
Specific Energ	0.69	ft	
Froude Numb	1.22		
Flow Type	Supercritical		

45
mod 1-06

RD-1c Minimum Slope
Worksheet for Trapezoidal Channel

Project Description	
Worksheet	Refuse Pile Rec
Flow Element	Trapezoidal Cha
Method	Manning's Form
Solve For	Channel Depth

Input Data		
Mannings Coeffic	0.037	$D_{50} = 6''$ slope = 4.4%
Slope	044000	ft/ft
Left Side Slope	2.00	V : H
Right Side Slope	2.00	V : H
Bottom Width	2.00	ft
Discharge	6.55	cfs

Results		
Depth	0.61	ft < 1.25
Flow Area	1.4	ft²
Wetted Perim	3.35	ft
Top Width	2.61	ft
Critical Depth	0.65	ft
Critical Slope	0.034226	ft/ft
Velocity	4.69	ft/s
Velocity Head	0.34	ft
Specific Energ	0.95	ft
Froude Numb	1.13	
Flow Type	Supercritical	

46
mod 1-06

RD-1c Maximum Slope
Worksheet for Trapezoidal Channel

Project Description	
Worksheet	Refuse Pile Rec
Flow Element	Trapezoidal Cha
Method	Manning's Form
Solve For	Channel Depth

Input Data		
Mannings Coeffic	0.048	$D_{50} = 6''$ slope = 23.3 %
Slope	0.233000	ft/ft
Left Side Slope	2.00	V : H
Right Side Slope	2.00	V : H
Bottom Width	2.00	ft
Discharge	6.55	cfs

Results		
Depth	0.42	ft
Flow Area	0.9	ft²
Wetted Perim	2.95	ft
Top Width	2.42	ft
Critical Depth	0.65	ft
Critical Slope	0.057602	ft/ft
Velocity	6.97	ft/s < 7.5 fps ∴ ok
Velocity Head	0.75	ft
Specific Energ	1.18	ft
Froude Numb	1.97	
Flow Type	Supercritical	

RD-2 Minimum Slope
Worksheet for Trapezoidal Channel

Project Description	
Worksheet	Refuse Pile Rec
Flow Element	Trapezoidal Cha
Method	Manning's Form
Solve For	Channel Depth

Input Data		
Mannings Coeffic	0.035	Rocky ground
Slope	017700	ft/ft
Left Side Slope	2.00	V : H
Right Side Slope	2.00	V : H
Bottom Width	1.00	ft
Discharge	0.59	cfs

Results		
Depth	0.27	ft < 1.0' ∴ ok
Flow Area	0.3	ft²
Wetted Perim	1.61	ft
Top Width	1.27	ft
Critical Depth	0.21	ft
Critical Slope	0.040045	ft/ft
Velocity	1.89	ft/s
Velocity Head	0.06	ft
Specific Energ	0.33	ft
Froude Numb	0.67	
Flow Type	Subcritical	

48
mad 1-06

RD-2 Maximum Slope
Worksheet for Trapezoidal Channel

Project Description	
Worksheet	Refuse Pile Rec
Flow Element	Trapezoidal Cha
Method	Manning's Form
Solve For	Channel Depth

Input Data		
Mannings Coeffic	0.035	Rocky ground
Slope	172400	ft/ft
Left Side Slope	2.00	V : H
Right Side Slope	2.00	V : H
Bottom Width	1.00	ft
Discharge	0.59	cfs

Results		
Depth	0.14	ft
Flow Area	0.1	ft²
Wetted Perim	1.30	ft
Top Width	1.14	ft
Critical Depth	0.21	ft
Critical Slope	0.040044	ft/ft
Velocity	4.07	ft/s < 5.0 fps ∴ ok
Velocity Head	0.26	ft
Specific Energ	0.39	ft
Froude Numb	2.01	
Flow Type	Supercritical	

RD-3 Minimum Slope
Worksheet for Trapezoidal Channel

Project Description	
Worksheet	Refuse Pile Rec
Flow Element	Trapezoidal Cha
Method	Manning's Form
Solve For	Channel Depth

Input Data		
Mannings Coeffic	0.040	$D_{50} = 3''$ slope = 15.38
Slope	153800	ft/ft
Left Side Slope	2.00	V : H
Right Side Slope	2.00	V : H
Bottom Width	2.00	ft
Discharge	1.47	cfs

Results		
Depth	0.17	ft < 1.0' ∴ ok
Flow Area	0.4	ft²
Wetted Perim	2.38	ft
Top Width	2.17	ft
Critical Depth	0.25	ft
Critical Slope	0.045437	ft/ft
Velocity	4.09	ft/s
Velocity Head	0.26	ft
Specific Energ	0.43	ft
Froude Numb	1.77	
Flow Type	Supercritical	

50
mad 1-06

RD-3 Maximum Slope
Worksheet for Trapezoidal Channel

Project Description	
Worksheet	Refuse Pile Rec
Flow Element	Trapezoidal Cha
Method	Manning's Form
Solve For	Channel Depth

Input Data		
Mannings Coeffic	0.045	$D_{50} = 3''$
Slope	318000	ft/ft
Left Side Slope	2.00	V : H
Right Side Slope	2.00	V : H
Bottom Width	2.00	ft
Discharge	1.47	cfs

slope = 31.8 %

Results		
Depth	0.15	ft
Flow Area	0.3	ft²
Wetted Perim	2.33	ft
Top Width	2.15	ft
Critical Depth	0.25	ft
Critical Slope	0.057411	ft/ft
Velocity	4.79	ft/s
Velocity Head	0.36	ft
Specific Energ	0.50	ft
Froude Numb	2.23	
Flow Type	Supercritical	

< 5.0 fps ∴ ok.

51
mad 1-06

RD-4 Minimum Slope
Worksheet for Trapezoidal Channel

Project Description	
Worksheet	Refuse Pile Rec
Flow Element	Trapezoidal Cha
Method	Manning's Form
Solve For	Channel Depth

Input Data		
Mannings Coeffic	0.035	Rocky Ground
Slope	032500	ft/ft
Left Side Slope	2.00	V : H
Right Side Slope	2.00	V : H
Bottom Width	1.00	ft
Discharge	0.50	cfs

Results		
Depth	0.21	ft < 1.0' ∴ ok
Flow Area	0.2	ft²
Wetted Perim	1.46	ft
Top Width	1.21	ft
Critical Depth	0.19	ft
Critical Slope	0.040547	ft/ft
Velocity	2.21	ft/s
Velocity Head	0.08	ft
Specific Energ	0.28	ft
Froude Numb	0.90	
Flow Type	Subcritical	

52
mod 1-06

RD-4 Maximum Slope
Worksheet for Trapezoidal Channel

Project Description	
Worksheet	Refuse Pile Rec
Flow Element	Trapezoidal Cha
Method	Manning's Form
Solve For	Channel Depth

Input Data		
Mannings Coeffic	0.035	Rocky Ground
Slope	114400	ft/ft
Left Side Slope	2.00	V : H
Right Side Slope	2.00	V : H
Bottom Width	1.00	ft
Discharge	0.50	cfs

Results		
Depth	0.14	ft
Flow Area	0.1	ft²
Wetted Perim	1.31	ft
Top Width	1.14	ft
Critical Depth	0.19	ft
Critical Slope	0.040546	ft/ft
Velocity	3.36	ft/s < 5.0 fps ∴ ok
Velocity Head	0.18	ft
Specific Energ	0.31	ft
Froude Numb	1.64	
Flow Type	Supercritical	

RD-5 Minimum Slope
Worksheet for Trapezoidal Channel

Project Description	
Worksheet	Refuse Pile Reclam
Flow Element	Trapezoidal Chann
Method	Manning's Formula
Solve For	Channel Depth

Input Data		
Mannings Coeffic	0.030	bare soil
Slope	017000	ft/ft
Left Side Slope	2.00	V : H
Right Side Slope	2.00	V : H
Bottom Width	3.00	ft
Discharge	6.87	cfs

Results		
Depth	0.56	ft < 1.0' ∴ ok
Flow Area	1.9	ft²
Wetted Perim	4.26	ft
Top Width	3.56	ft
Critical Depth	0.53	ft
Critical Slope	0.020872	ft/ft
Velocity	3.71	ft/s
Velocity Head	0.21	ft
Specific Energ	0.78	ft
Froude Numb	0.91	
Flow Type	Subcritical	

RD-5 Maximum Slope
Worksheet for Trapezoidal Channel

Project Description	
Worksheet	Refuse Pile Reclam
Flow Element	Trapezoidal Channe
Method	Manning's Formula
Solve For	Channel Depth

Input Data		
Mannings Coeffic	0.030	bare soil
Slope	024000	ft/ft
Left Side Slope	2.00	V : H
Right Side Slope	2.00	V : H
Bottom Width	3.00	ft
Discharge	6.87	cfs

Results		
Depth	0.51	ft
Flow Area	1.7	ft²
Wetted Perim	4.13	ft
Top Width	3.51	ft
Critical Depth	0.53	ft
Critical Slope	0.020871	ft/ft
Velocity	4.16	ft/s < 5.0 ∴ ok
Velocity Head	0.27	ft
Specific Energ	0.78	ft
Froude Numb	1.07	
Flow Type	Supercritical	

Swale 1
Worksheet for Trapezoidal Channel

Project Description	
Worksheet	Refuse Pile Reclam
Flow Element	Trapezoidal Channe
Method	Manning's Formula
Solve For	Channel Depth

Input Data		
Mannings Coeffic	0.030	bare soil
Slope	036000	ft/ft
Left Side Slope	4.00	V : H
Right Side Slope	4.00	V : H
Bottom Width	3.00	ft
Discharge	6.36	cfs

Results		
Depth	0.44	ft <1.0' ∴ ok
Flow Area	1.4	ft²
Wetted Perim	3.90	ft
Top Width	3.22	ft
Critical Depth	0.51	ft
Critical Slope	0.022267	ft/ft
Velocity	4.66	ft/s < 5.0 fps ∴ ok
Velocity Head	0.34	ft
Specific Energ	0.78	ft
Froude Numb	1.26	
Flow Type	Supercritical	

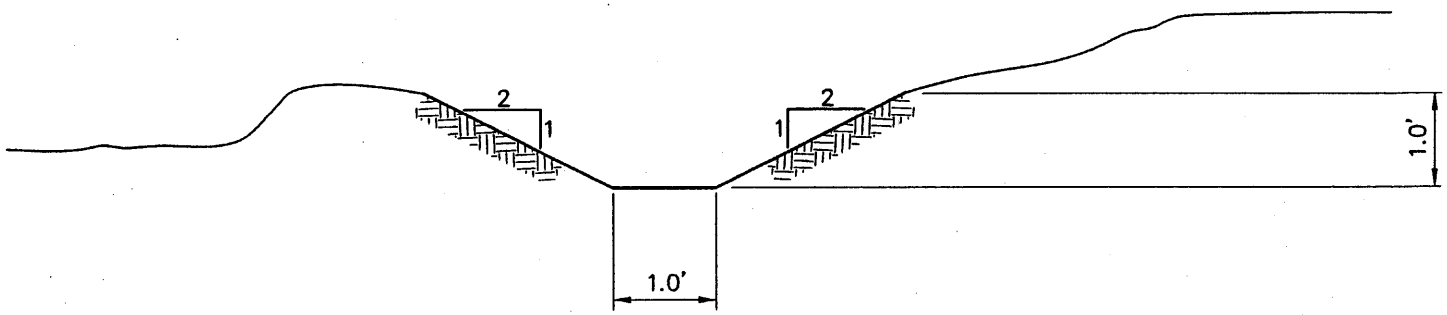

NO SCALE

UD-1a

EarthFax

G:\UC801\08\HYDROLOGY\FG-UD-1a.DWG

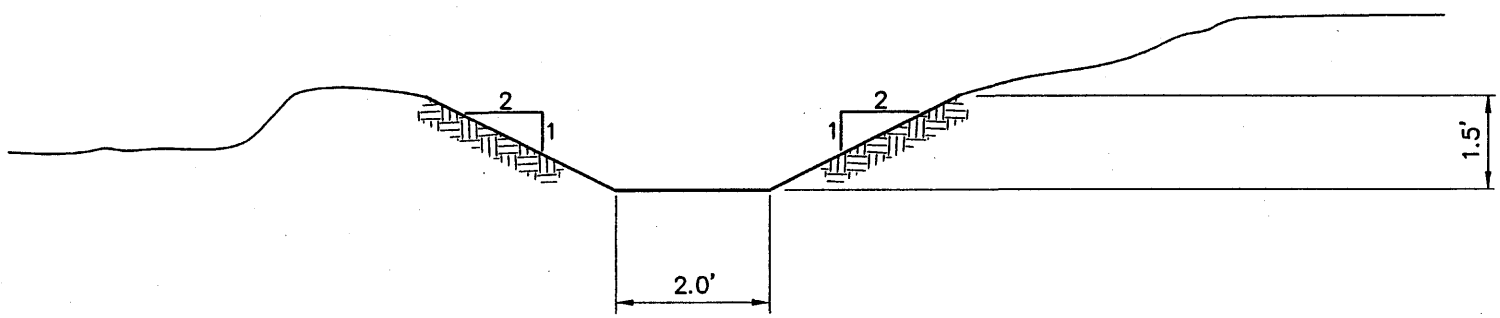

NO SCALE

UD-1b

EarthFax

G:\UC801\OB\HYDROLOGY\FG-UD-1b.DWG

57

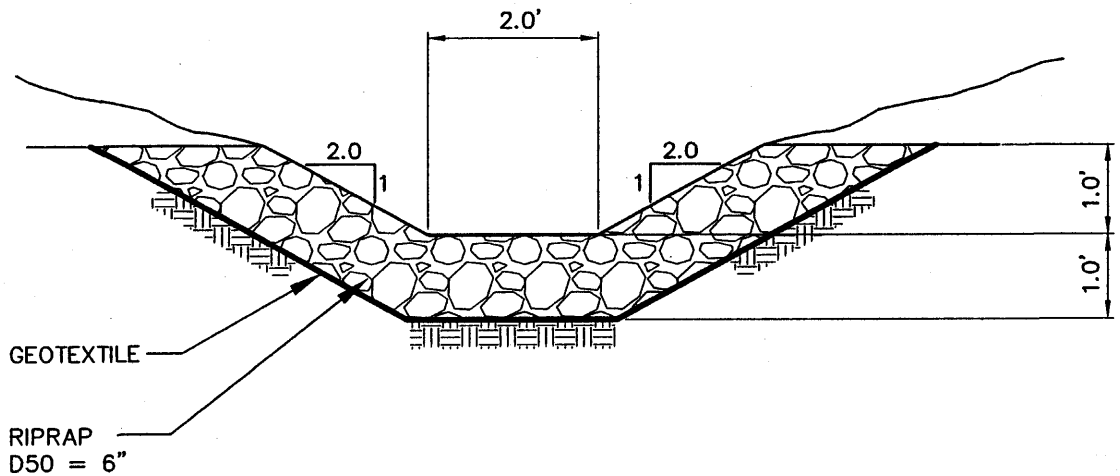

NO SCALE

UD–1c

EarthFax

G:\UC801\OB\HYDROLOGY\FIG-UD-1c.DWG

58

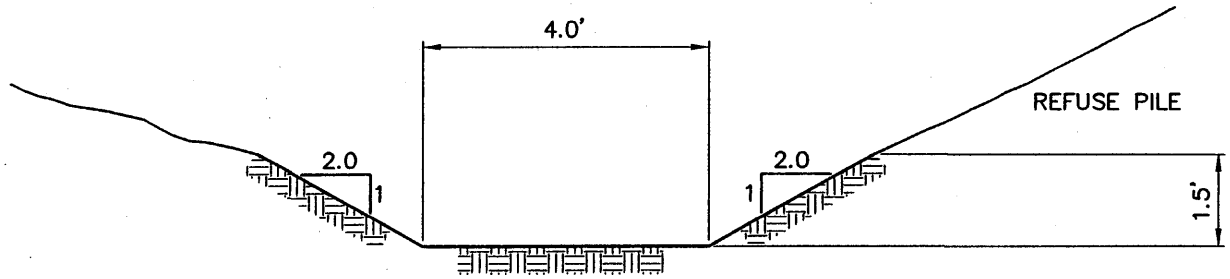

NO SCALE

DD-1 NON-RIPRAPPED SECTIONS (SLOPE UNDER 4%)

EarthFax

G:\UCB01\DB\HYDROLOGY\FIG-DD-1NORIP.DWG

59

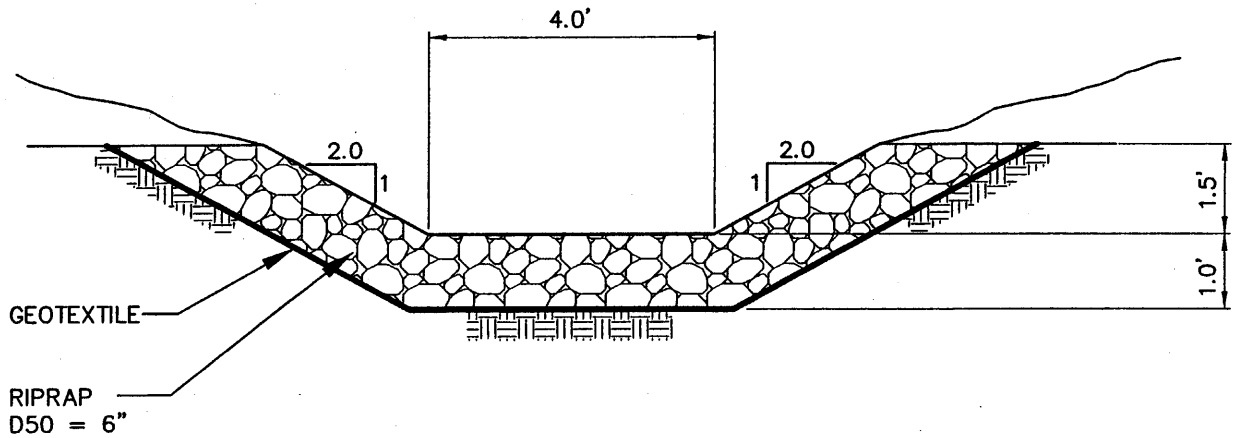

NO SCALE

DD-1 RIPRAPPED SECTIONS (SLOPE OVER 4%)

EarthFax

G:\UCB01\GB\HYDROLOGY\FIG-DD-1.DWG

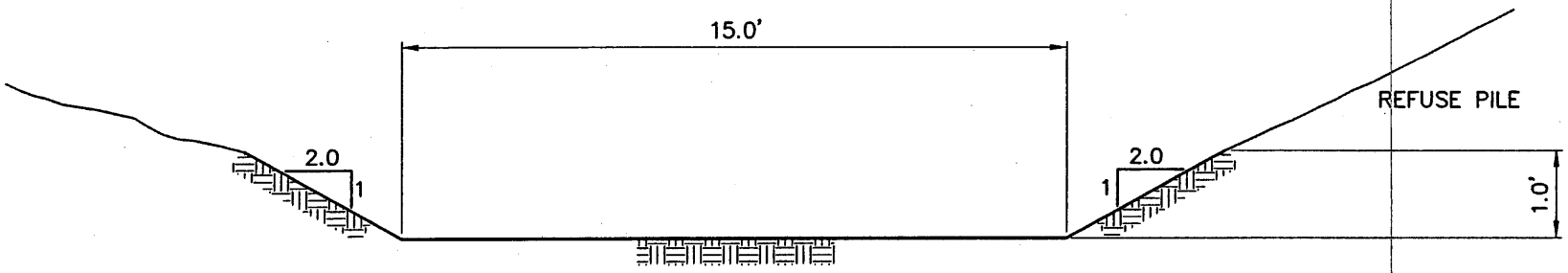

NO SCALE

DD-2a

EarthFax

G:\UC801\DB\HYDROLOGY\FIG-DD-2a.DWG

61

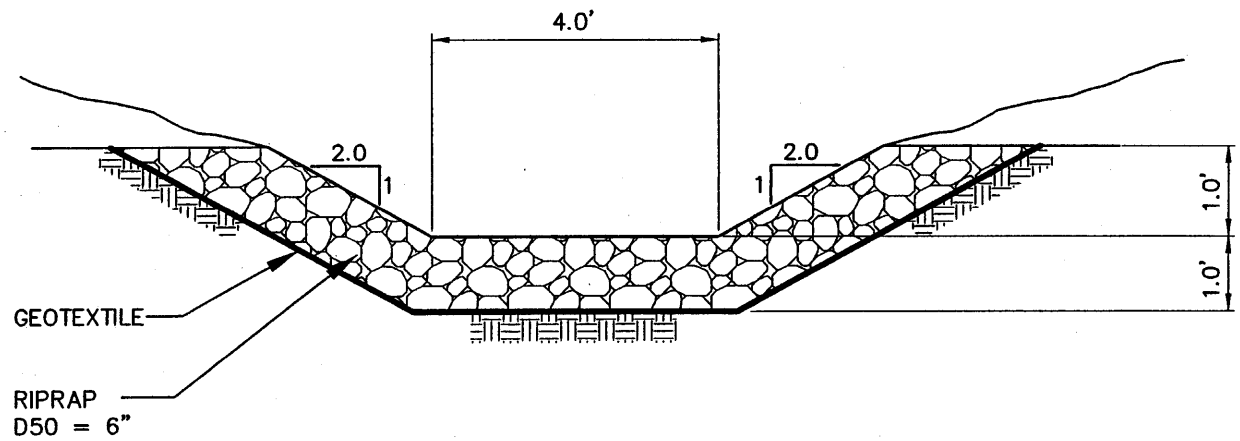

NO SCALE

DD-2b

EarthFax

G:\UCB01\08\HYDROLOGY\FIG-DD-2b.DWG

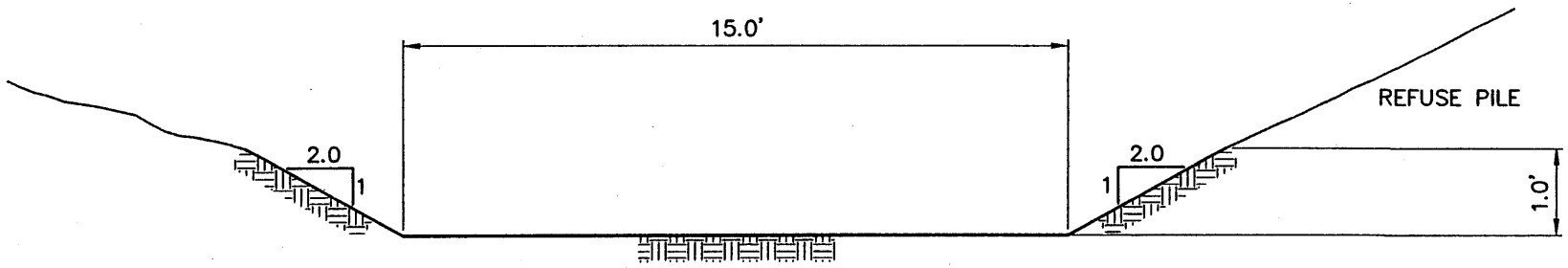

NO SCALE

DD-3a

EarthFax

G:\UC801\GB\HYDROLOGY\FIG-DD-3a.DWG

63

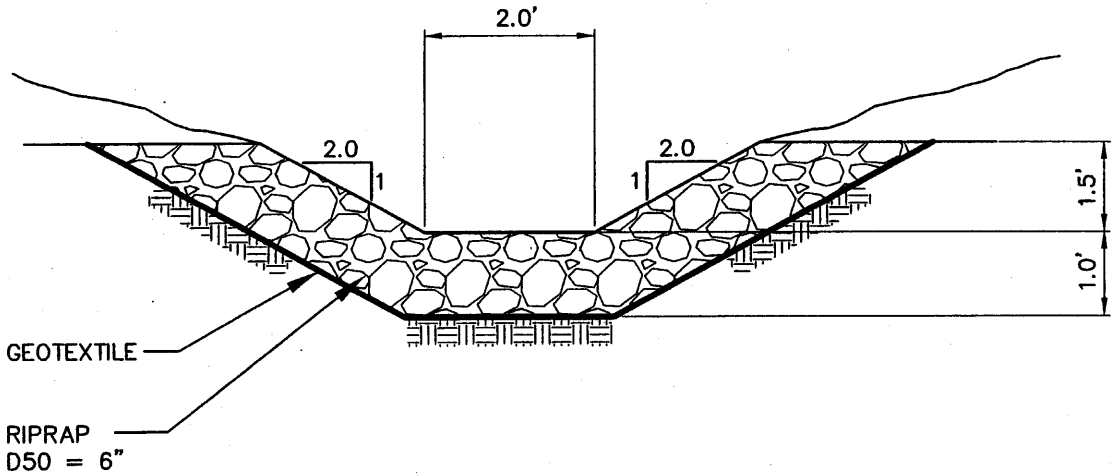

NO SCALE

DD-3b

EarthFax

G:\UC801\08\HYDROLOGY\FIG-DD-3b.DWG

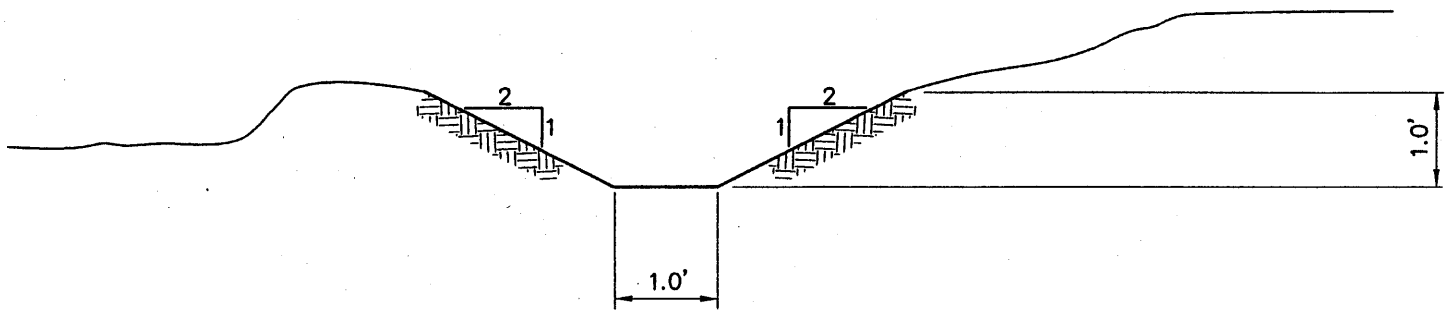

NO SCALE

RD-1a

EarthFax

G:\UC801\08\HYDROLOGY\FG-RD-1a.DWG

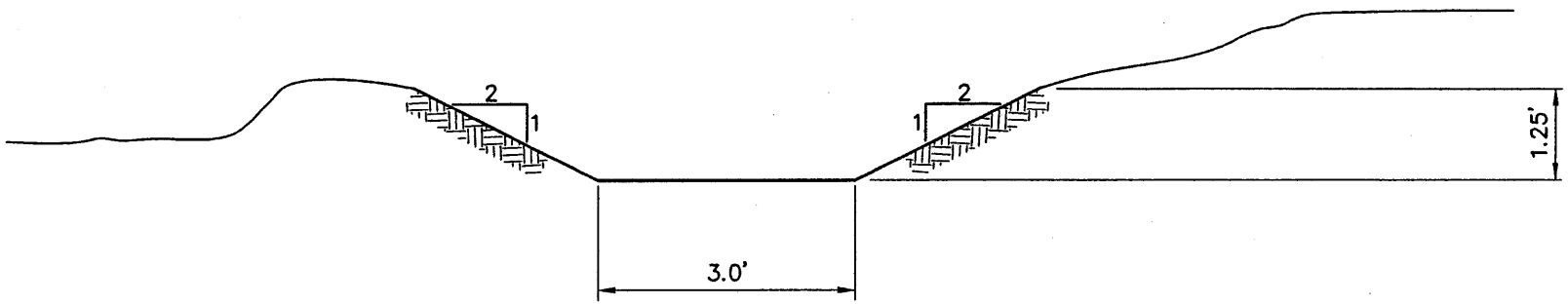

NO SCALE

RD-1b

EarthFax

mar 1-06

G:\UC801\08\HYDROLOGY\FG-RD-1b.DWG

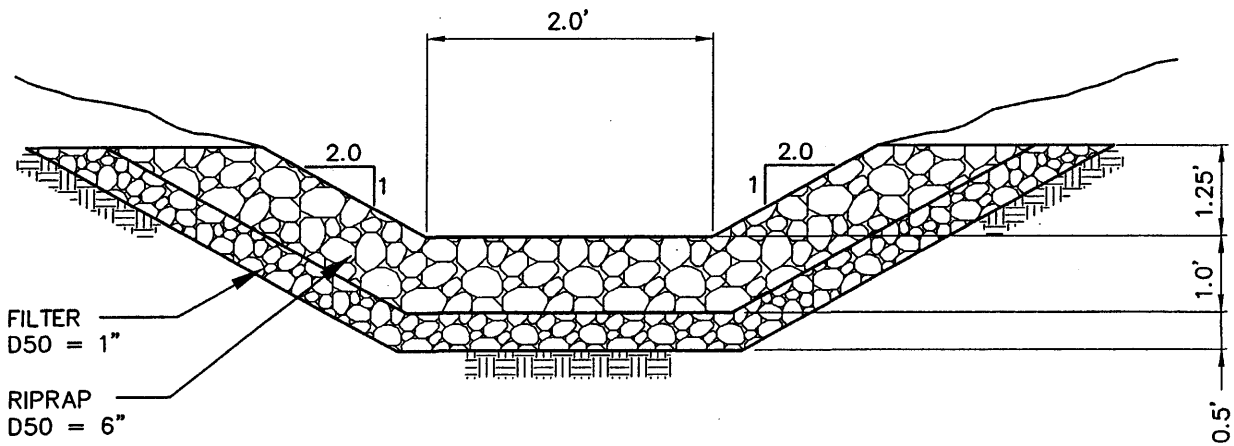

NO SCALE

RD–1c

EarthFax

G:\UCB01\15\FIG-RD-1c.DWG

mod 1-06

67

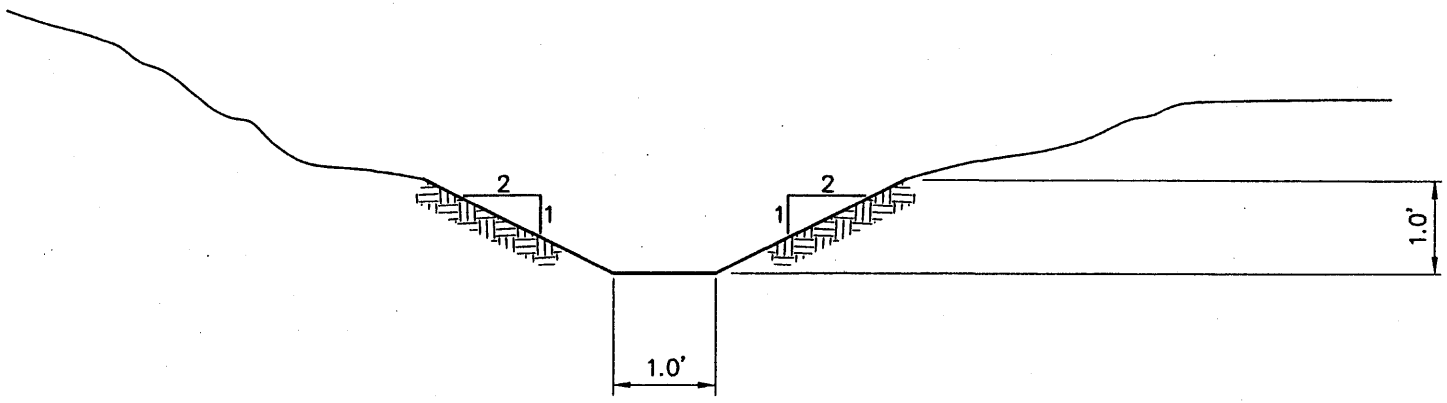

NO SCALE

RD-2

EarthFax

G:\UCB01\OB\HYDROLOGY\FG-RD-2.DWG

68

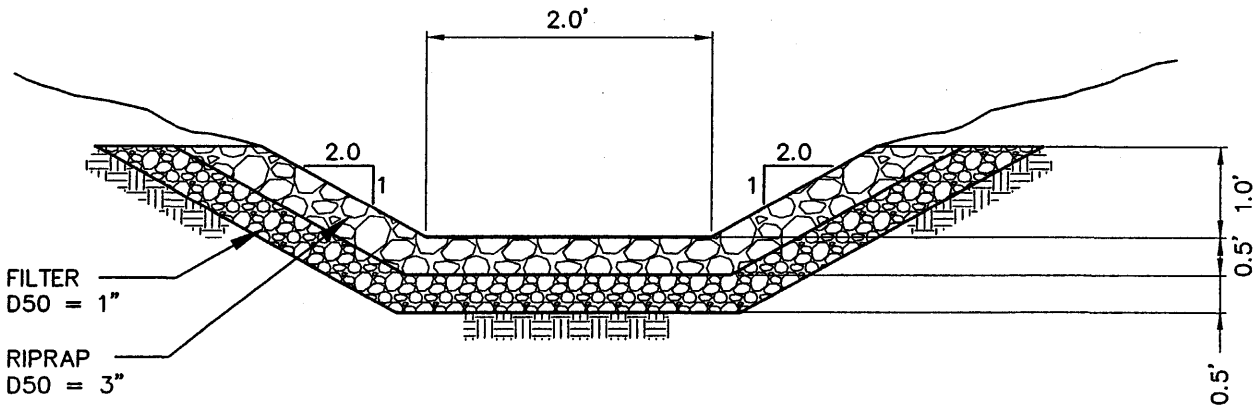

NO SCALE

RD-3

EarthFax

G:\UC801\15\FIG-RD-3.DWG

rev 1-06

69

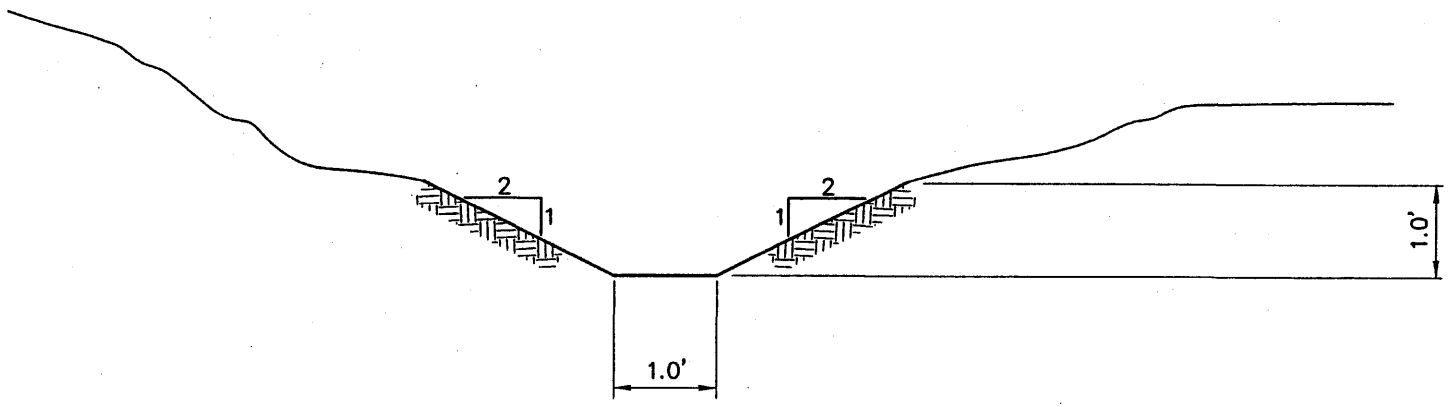

NO SCALE

RD-4

EarthFax

G:\UC801\08\HYDROLOGY\FG-RD-2.DWG

70

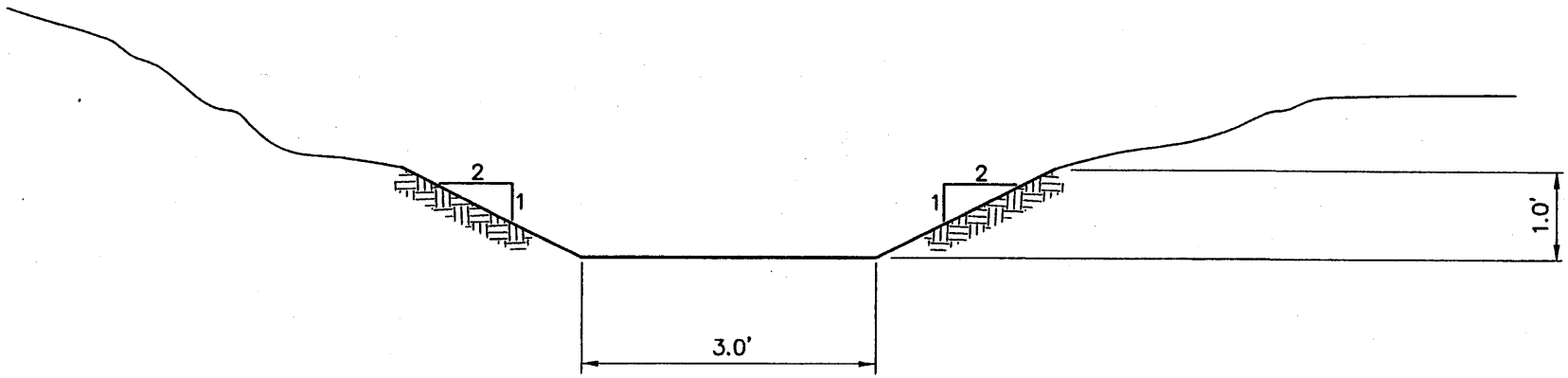

NO SCALE

RD-5

EarthFax

G:\UC801\OB\HYDROLOGY\FG-RD-5.DWG

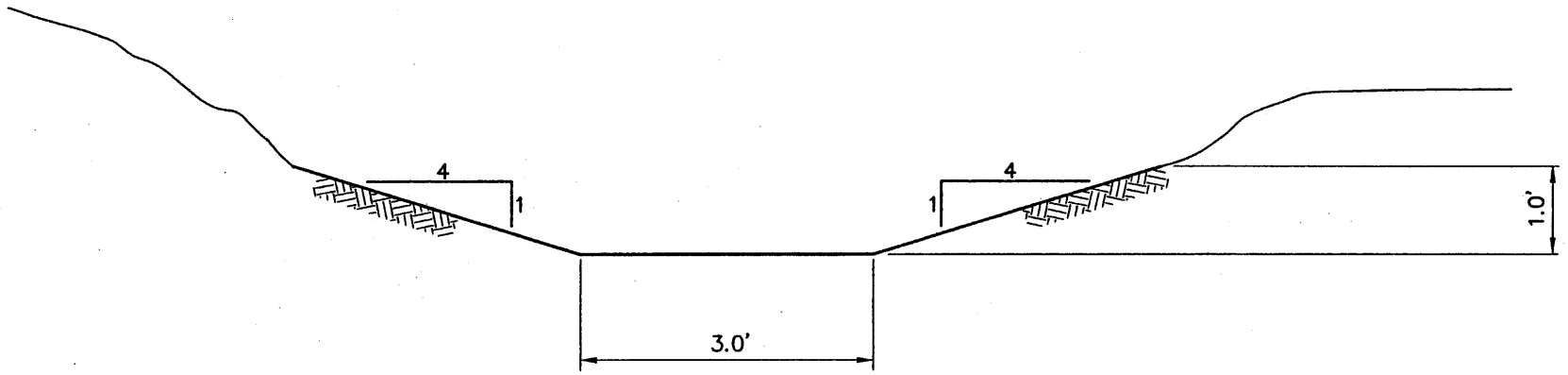

NO SCALE

SWALE 1

EarthFax

G:\UC801\08\HYDROLOGY\FIG-SWALE 1.DWG

72

CHAPTER 8

BONDING AND INSURANCE

TABLE OF CONTENTS

Section — Page

CHAPTER 8 8-1

810 BONDING DEFINITIONS AND DIVISION RESPONSIBILITIES 8-1

820 REQUIREMENT TO FILE A BOND 8-1

830 DETERMINATION OF BOND AMOUNT 8-1

840 GENERAL TERMS AND CONDITIONS OF THE BOND 8-2

850 BONDING REQUIREMENTS FOR UNDERGROUND COAL MINING AND RECLAMATION ACTIVITIES 8-2

860 FORMS OF BONDS 8-2

870 REPLACEMENT OF BONDS 8-2

880 REQUIREMENTS TO RELEASE PERFORMANCE BONDS 8-2

890 TERMS AND CONDITIONS FOR LIABILITY INSURANCE 8-2

CHAPTER 8
BONDING AND INSURANCE

810 BONDING DEFINITIONS AND DIVISION RESPONSIBILITIES

This chapter provides information regarding the bonding for coal mining and reclamation operations at the Dugout Canyon Mine Refuse Pile. CFC will have on file with the Division a bond or bonds made payable to the Division for performance of all the requirements of the State Program.

820 REQUIREMENT TO FILE A BOND

The disturbed area (15.60 acres) covered by the bond is outlined on RA Plate 5-1 of this amendment. The disturbed area and specific acres to be reclaimed are discussed in Section 340. The performance bond period is for the duration of the coal mining and reclamation operations including the extended period designated by the Division. The bond is in the form of a surety bond and is described in Section 860 of the M&RP.

830 DETERMINATION OF BOND AMOUNT

The reclamation bond (direct and indirect costs) for the Dugout Canyon Mine refuse pile site is found in Appendix 5-6 of the M&RP. The most current formulas from the Office of Surface Mining, *Handbook for Calculation of Reclamation Bond Amounts*, were used to determine the coverage necessary for reclamation (Means, 2006). Additional details concerning the estimate can be found in Sections 540, and 550 of this amendment. The bond coverage will be adjusted per the Division's determination of required bond coverage.

840 GENERAL TERMS AND CONDITIONS OF THE BOND

Refer to Chapter 8 of the approved M&RP.

850 BONDING REQUIREMENTS FOR UNDERGROUND COAL MINING AND RECLAMATION ACTIVITIES

Refer to Chapter 8 of the approved M&RP.

860 FORMS OF BONDS

Refer to Chapter 8 of the approved M&RP.

870 REPLACEMENT OF BONDS

Refer to Chapter 8 of the approved M&RP.

880 REQUIREMENTS TO RELEASE PERFORMANCE BONDS

The applicant will comply with the requirements described in Section R645-301-880 of the Division regulations when applying for the release of performance bonds.

890 TERMS AND CONDITIONS FOR LIABILITY INSURANCE

Certificates of Insurance issued for the Dugout Mine are included as Appendix 1-2 of the M&RP. For additional information refer to Chapter 8 of the approved M&RP.