APPENDIX 7-4

WEST RIDGE MINE
SEDIMENTATION AND DRAINAGE CONTROL PLAN
(AS CONSTRUCTED)

PREPARED BY: **DAN W. GUY, P.E.**
BLACKHAWK ENGINEERING, INC.
SEPTEMBER 2002

APPLICATION FOR PERMIT PROCESSING

Permit Change ☐	New Permit ☐	Renewal ☐	Transfer ☐	Exploration ☐	Bond Release ☐	Permit Number: C/007/041
Title of Proposal: Division Order DO00A – ASCA's						Mine: WEST RIDGE
						Permittee: **WEST RIDGE Resources, Inc.**

Description, include reason for application and timing required to implement: Incorporate the As Built Construction of the ASCA areas into the permit.

Instructions: *If you answer yes to any of the first 8 questions (gray), submit the application to the Salt Lake Office. Otherwise, you may submit it to your reclamation specialist.*

☐ Yes	☐ No	1. Change in the size of the Permit Area? _____ acres Disturbed Area? _____ acres ☐ increase ☐ decrease.
☐ Yes	☐ No	2. Is the application submitted as a result of a Division Order?
☐ Yes	☐ No	3. Does application include operations outside a previously identified Cumulative Hydrologic Impact Area?
☐ Yes	☐ No	4. Does application include operations in hydrologic basins other than as currently approved?
☐ Yes	☐ No	5. Does application result from cancellation, reduction or increase of insurance or reclamation bond?
☐ Yes	☐ No	6. Does the application require or include public notice/publication?
☐ Yes	☐ No	7. Does the application require or include ownership, control, right-of-entry, or compliance information?
☐ Yes	☐ No	8. Is proposed activity within 100 feet of a public road or cemetery or 300 feet of an occupied dwelling?
☐ Yes	☐ No	9. Is the application submitted as a result of a Violation?
☐ Yes	☐ No	10. Is the application submitted as a result of other laws or regulations or policies? Explain:
☐ Yes	☐ No	11. Does the application affect the surface landowner or change the post mining land use?
☐ Yes	☐ No	12. Does the application require or include underground design or mine sequence and timing?
☐ Yes	☐ No	13. Does the application require or include collection and reporting of any baseline information?
☐ Yes	☐ No	14. Could the application have any effect on wildlife or vegetation outside the current disturbed area?
☐ Yes	☐ No	15. Does application require or include soil removal, storage or placement?
☐ Yes	☐ No	16. Does the application require or include vegetation monitoring, removal or revegetation activities?
☐ Yes	☐ No	17. Does the application require or include construction, modification, or removal of surface facilities?
☐ Yes	☐ No	18. Does the application require or include water monitoring, sediment or drainage control measures?
☐ Yes	☐ No	19. Does the application require or include certified designs, maps, or calculations?
☐ Yes	☐ No	20. Does the application require or include subsidence control or monitoring?
☐ Yes	☐ No	21. Have reclamation costs for bonding been provided for?
☐ Yes	☐ No	22. Does application involve a perennial stream, a stream buffer zone or discharges to a stream?
☐ Yes	☐ No	23. Does the application affect permits issued by other agencies or permits issued to other entities?

☐ **Attach _3_ complete copies of the application.**

I hereby certify that I am a responsible official of the applicant and that the information contained in this application is true and correct to the best of my information and belief in all respects with the laws of Utah in reference to commitments, undertakings, and obligations, herein. (R645-301-123)

Signed - Name - Position - Date

Subscribed and sworn to before me this 2nd day of Oct 2002

Notary Public

My Commission Expires:
Attest: STATE OF UTAH
COUNTY OF Carbon

RADA J. ROGERS
NOTARY PUBLIC • STATE of UTAH
2150 N. LUNDY LANE
P O BOX 128
CLEVELAND UT 84518
COMM. EXP. 10-2-2002

Received by Oil, Gas & Mining

ASSIGNED TRACKING NUMBER

Application for Permit Processing
Detailed Schedule of Changes to the MRP

Title of Application: Division Order DO00A – ASCA's	Permit Number: C/007/041
	Mine: WEST RIDGE
	Permittee: WEST RIDGE Resources, Inc.

Provide a detailed listing of all changes to the mining and reclamation plan which will be required as a result of this proposed permit application. Individually list all maps and drawings which are to be added, replaced, or removed from the plan. Include changes of the table of contents, section of the plan, pages, or other information as needed to specifically locate, identify and revise the existing mining and reclamation plan. **Include page, section and drawing numbers as part of the description.**

			DESCRIPTION OF MAP, TEXT, OR MATERIALS TO BE CHANGED
☐ ADD	☐ REPLACE	☐ REMOVE	Appendix 7-4 Revised September 2002
☐ ADD	☐ REPLACE	☐ REMOVE	Page 2-8, Chapter 2
☐ ADD	☐ REPLACE	☐ REMOVE	Pages 7-19, 32 and 39, Chapter 7
☐ ADD	☐ REPLACE	☐ REMOVE	
☐ ADD	☐ REPLACE	☐ REMOVE	
☐ ADD	☐ REPLACE	☐ REMOVE	
☐ ADD	☐ REPLACE	☐ REMOVE	
☐ ADD	☐ REPLACE	☐ REMOVE	
☐ ADD	☐ REPLACE	☐ REMOVE	
☐ ADD	☐ REPLACE	☐ REMOVE	
☐ ADD	☐ REPLACE	☐ REMOVE	
☐ ADD	☐ REPLACE	☐ REMOVE	
☐ ADD	☐ REPLACE	☐ REMOVE	
☐ ADD	☐ REPLACE	☐ REMOVE	
☐ ADD	☐ REPLACE	☐ REMOVE	
☐ ADD	☐ REPLACE	☐ REMOVE	
☐ ADD	☐ REPLACE	☐ REMOVE	
☐ ADD	☐ REPLACE	☐ REMOVE	
☐ ADD	☐ REPLACE	☐ REMOVE	
☐ ADD	☐ REPLACE	☐ REMOVE	
☐ ADD	☐ REPLACE	☐ REMOVE	

Any other specific or special instructions required for insertion of this proposal into the Mining and Reclamation Plan?

This structural portion of the pond embankment will have been in contact with impounded water and coal fines during the operational life of the mine. Therefore, it will be removed separately and disposed of at an approved waste disposal site such as ECDC at the time of final reclamation).

After the original surface has been re-exposed, many of the original boulders will be re-exposed as well. To the extent possible, the backhoe operator will pull the boulders up through the remnant layer of fill so that the boulder sits prominently on top of the surface and not buried within it. This will help to create protected microclimates around the base of the boulders which will help to assure successful revegetation.

In areas where topsoil is to be salvaged, the soils will be removed with one or more of the following types of equipment: bulldozer, grader, front-end loader, and/or trackhoe. A soil scientist will provide on-site consultation during the topsoil removal process to maximize harvest of quality topsoil.

Topsoil material will be stockpiled at the primary storage area located above the mine yard in the right fork of C Canyon. ~~An secondary storage area location has been designated in the left fork of C Canyon if more space is needed~~. This location will allow the soil materials to be located away from mining activities to minimize the potential impacts from mine-related activities. The storage area will be located over the bypass culvert so that the main canyon drainage will be culverted beneath the stockpile and will not impinge on the stockpiled topsoil. Drainage ditches will also be located along the sides of the stockpile to divert drainage away from the stockpile surface. ~~The stockpile area in the left fork will be a Best Technology Currently Available (BTCA) area treated by an alternate method of sediment control, such as silt fences and revegetation~~. Refer to Map 2-4 for details of the ~~proposed~~ topsoil storage area. Refer to Appendix 7-4 for details of the drainage control designs proposed for the alternate sediment control areas (ASCAs).

~~It should be noted that the topsoil storage area depicted on Map 2-4 show the potential area available for topsoil stockpile placement and not necessarily the final configuration of the stockpiled topsoil. This map portrays stockpiles totaling 9,600 cubic yards of topsoil storage which is more than sufficient to handle the projected topsoil storage requirements from the minesite (6,506 cubic yards). However, if additional topsoil is salvaged during construction (under the supervision of qualified soil scientist) the designated topsoil storage areas can easily accommodate the additional volume. The designated topsoil storage areas, ASCA X and ASCA Y, occupy approximately 0.5 acres and 0.64 acres respectively. The actual area occupied by the stockpiled topsoil is expected to be less, however.~~

the drainage course unaffected by the mining operation. A 36" diameter culvert will be installed in the left fork and a 48" diameter culvert will be installed in the right fork. A 48" culvert will be installed in the main canyon below the confluence of the forks. The size of the culverts will adequately pass the 100 year, 6 hour flow event even though a smaller culvert would meet the requirements of the regulations.

At the topsoil pile locations, undisturbed drainage will be diverted around the stockpiles with ditches at the edge of the pile toward the undisturbed drainage channel. The ditches will divert water away from the stockpile to minimize erosion. The ditches have been sized to convey flow from the 10 year, 24 hour event. The ditches will slope 1% toward the natural drainage. A typical ditch design is presented in Appendix 7-4 "West Ridge Mine Sedimentation and Drainage Control Plan". The stockpiled topsoil material will be loosely piled and have an irregular, pitted surface or contour furrows to help retain runoff from precipitation events and to reduce erosion until vegetation becomes reestablished. A diversion ditch will be constructed at the edge of the stockpile to divert undisturbed drainage away from the stockpile. Silt fencing will be placed around the perimeter of the stockpile to treat any runoff from the pile.

The topsoil stockpile and test plots will be designated as Alternate Sediment Control Areas (ASCAs).

Refer to Appendix 5-5 for a complete discussion on the construction of the topsoil stockpiles. Refer to Appendix 5-7 for the Pump House ASCA. Refer to Appendix 7-4 for details of the drainage control designs. Map 2-4 depicts the drainage controls of the topsoil stockpile areas.

731.200 Water Monitoring

This section describes the hydrologic monitoring plan. Locations of surface-water and groundwater monitoring sites are indicated on Map 7-6. Hydrologic monitoring protocols, sampling frequencies, and sampling sites are described in Table 7-1 through 7-6. Operational field and laboratory hydrologic monitoring parameters for surface water are listed in Table 7-2, and for groundwater in Table 7-3. The hydrologic monitoring parameters have been selected in consultation with the DOGM's directive Tech-004, *Water Monitoring Programs for Coal Mines.*

Operational field and laboratory parameters will be measured for the first two years of mine operation; after this time, if sampling has adequately characterized the hydrology in the area, a request will be made to reduce monitoring to field parameters and one operational analytical sample collected during low flow (August or September). The physical parameters and chemical composition of springs and streams in and around the permit area should be adequately characterized following

R645-301-732 SEDIMENT CONTROL MEASURES

732.100 Siltation structures will be constructed and maintained in accordance with the applicable regulations. Siltation structures will not be removed until authorized by the Division of Oil, Gas and Mining.

Alternative sediment control measures will be used in areas where the surface disturbance is minor and sediment control is expected to be restored fairly rapidly with revegetation. Alternate sediment controls will be used on the topsoil stockpile and test plot areas. At these locations diversion ditches will divert undisturbed area runoff away from the site. Silt fencing will be utilized to minimize siltation from the sites. The surface of the stockpile will be pocked and roughened to retain moisture and minimize runoff from the disturbed surface. The surface area will be revegetated to minimize surface erosion. ~~The alternate sediment control area located in the right fork is 0.46 acres while the stockpile area for the left fork is 1.13 acres.~~

The other ASCA's (alternate sediment control areas) will be at the office and parking lot area below the mine yard facility area, the cut slope on the northern side ot the mine road opposite the office area and the pump house area. ~~This 1.37 acre area will be sloped to one end of the pad area where a sediment retention basin will be used for sediment control. In addition, the slopes and embankment of the office pad will be revegetated to control sedimentation and erosion.~~ The control measures are described in Appendix 7-4.

732.200 The sedimentation pond has been designed in compliance with the appropriate regulations. Refer to Maps 7-4 and 7-4A for the sediment pond plan and cross-section details. The sediment pond will be reclaimed during reclamation of the mineyard facilities. Refer to Appendix 5-5 for the complete details of the reclamation plan.

732.300 Diversions will be constructed and maintained with respect to R645-301-742.100 and 742.300.

732.400 Road Drainage

Roads within the disturbed area will be designed and constructed to utilize standard designs for surface drainage control, culvert size and spacing and grade. Refer to Map 5-5, Surface Facility Map.

Drainage ditches and culverts have been designed to handle a 10 year, 24 hour storm event. The larger design capacity will also provide additional capacity above what is required by the regulations, for a greater margin of safety in the mineyard during operations.

Riprap will be placed around the inlet end of the culverts to a height of at least 6" above the required headwall for each culvert. The outlet of the main canyon bypass

R645-301-740 DESIGN CRITERIA AND PLANS

Site specific plans that incorporate design criteria for control of drainage from disturbed and undisturbed areas are presented below.

R645-301-742 SEDIMENT CONTROL MEASURES

Sediment control measures have been designed to prevent, to the extent possible, additional contributions of sediment to stream flow or runoff outside the permit area, to meet effluent limitations and to minimize erosion.

The most significant sediment control measure will be to collect all disturbed area runoff and divert it into a sediment pond designed for total containment of the 10 year, 24 hour precipitation event. Runoff from undisturbed areas above the mining site will be diverted, as much as possible, to reduce the amount of runoff to be treated by the sediment pond. Refer to Appendix 7-4 for the "West Ridge Mine Sedimentation and Drainage Control Plan" and Map 7-1 "Drainage Area Map" and Map 7-2 "Mine Site Drainage Map" for the mine site drainage calculations and diversion culvert specifications.

Additional measures to be taken may include: interim reclamation of disturbance, where practical, to reduce runoff and erosion; rip rapping or lining diversion ditches, where necessary, to reduce erosion; and using straw bales and check dams to control flow, sediment and erosion. A discussion of alternate sediment controls measures is presented in Appendix 7-4 for the ASCA areas (topsoil stockpile, test plots and office pad) at the minesite and Appendix 5-7 for the pump house area. Designs for the sediment controls will be according to information presented in Appendix 7-4 and Maps 5-5, 5-8, 7-1, and 7-4.

Snow removal activities at the mine site will attempt to stockpile any large amounts of snow in those snow storage site locations indicated on Map 7-2. The snow stockpile locations are primarily designed for storing snow clear from some of the larger pad areas. Snow will still be plowed to the side of roadways and small pad areas.

742.220 Minimizing contributions of suspended solids and sediment to streamflow or runoff outside the permit area will be accomplished by constructing a multiple cell sediment pond for sediment treatment and storage of runoff from the disturbed area. The sediment pond has been designed to provide adequate sediment storage and detention time for the 10 year, 24 hour precipitation event. The pond has a principal and emergency spillway in cell B which is designed to pass the peak flow from the design event as required by the regulations. The design of both the principal and emergency spillways will accommodate the peak flow of 23.71 cfs from a 25 year, 6 hour event.

SEDIMENTATION AND DRAINAGE CONTROL PLAN
WEST RIDGE MINE
TABLE OF CONTENTS

SECTION		PAGE NUMBER
1.	Introduction	1
2.	Design of Drainage Control Structures	2
	Design Parameters	
2.1	Precipitation	3
2.2	Flow	4
2.3	Velocity	5
2.4	Drainage Areas	5
2.5	Slopes, Lengths	5
2.6	Runoff	6
2.7	Runoff Curve Numbers	6
2.8	Culvert Sizing	8
2.9	Culverts	8
2.10	Ditches	10
2.11	Alternate Sediment Control Areas (ASCA)	11
2.12	Main Canyon Culvert - Outlet Structure	12
2.13	Rip-Rap Design	12
Table 1	Undisturbed Drainage Area - Runoff Curve Number Summary	14
Table 2	Surface Water Hydrologic Summary	17
Table 3	Undisturbed Drainage Data	18
Table 4	Undisturbed Drainage Summary	19
Table 5	Undisturbed Ditch Design Summary	20
Table 6	Undisturbed Culvert Data - (ByPass Culverts)	21
Table 7	Undisturbed Culvert Design Summary	22
Table 8A	Disturbed Areas Data	24
Table 8B	ASCA Areas Data	24
Table 9	Disturbed Drainage Summary	25

SEDIMENTATION AND DRAINAGE CONTROL PLAN
WEST RIDGE MINE
TABLE OF CONTENTS (Continued)

SECTION		PAGE NUMBER
Table 10	Drainage Structures	26
Table 11	Drainage Structure Flow Summary	28
Table 12	Disturbed Ditch Data	30
Table 13	Disturbed Ditch Design Summary	31
Table 14	Disturbed Culvert Data	34
Table 15	Disturbed Culvert Design Summary	35

Figures: Figures Follow Page 36

Figure 1	Culvert Nomograph
Figure 2	Rip-Rap Chart
Figure 3	Undisturbed and Disturbed Ditch, Typical Section (Unlined Ditch)
Figure 4	Undisturbed and Disturbed Ditch, Typical Section (Lined Ditch)
Figure 4A	Disturbed Ditch/Energy Dissipaters
Figure 5	Undisturbed Culvert Inlet, Typical Section
Figure 6	Main Bypass Culvert Outlet
Figure 7	ASCA-X Containment

3.	Design of Sediment Control Structures	37
3.1	Design and Construction Specifications for Sedimentation Pond	38
3.2	Sediment Yield	40
3.3	Sediment Pond Volume	41
Table 16	Sediment Pond Design	42
Table 17	Sediment Pond Stage-Volume Data	43
Table 17A	Sediment Pond Stage-Discharge Data (Open Channel Spillway)	44
Table 18	Sediment Pond Stage-Discharge Data (Principal Spillway)	45
Table 19	Sediment Pond Stage-Discharge Data (Emergency Spillway)	46
3.4	Sediment Pond Summary	47

SEDIMENTATION AND DRAINAGE CONTROL PLAN
WEST RIDGE MINE
TABLE OF CONTENTS (Continued)

SECTION		PAGE NUMBER
Figures:		**Figures Follow Page 48**
Figure 8	Sediment Pond Stage-Volume Curve	
Figure 9	Sediment Pond Stage-Discharge Curve (Open Channel Spillway)	
Figure 10	Sediment Pond Stage-Discharge Curve (Principal Spillway)	
Figure 11	Sediment Pond Stage-Discharge Curve (Emergency Spillway)	
4.	Design of Drainage Control Structures for Reclamation Hydrology	49
4.1	General	50
4.2	Reclaimed Area Drainage Control	51
4.3	Restored Channels	54
4.4	Sediment Pond	54
Table 20	Final Reclamation - Drainage Areas Contributing to Channels	55
Table 21	Final Reclamation - Drainage Structure Flow Summary	56
Table 22	Final Reclamation - Restored Channel Design Parameters	57
Table 23	Final Reclamation - Restored Channel Flow Calculations	58
Figure 12	Restored Channel, Typical Sections	Figure Follows Page 59

APPENDICES

Appendix 1 - Computer Backup Data

WEST RIDGE MINE
SEDIMENTATION AND DRAINAGE CONTROL PLAN

1. Introduction

The Sedimentation and Drainage Control Plan for the West Ridge Mine has been designed according to the State of Utah R645 - Coal Mining Rules, September 1996. The mine was constructed in 1999. This plan represents the as-constructed drainage control plan. All design criteria and construction has been certified by a Utah Registered Professional Engineer.

The plan has been divided into the following three sections:

1) **Design of Drainage Control Structures**
2) **Design of Sediment Control Structures**
3) **Design of Drainage Control Structures for Reclamation**

The general surface water control plan for this project consists of the following:

a) **Undisturbed drainage from the canyon above the minesite is diverted beneath the site via a properly sized culvert and be discharged below the disturbed area;**

b) **The right and left forks and major side drainages into the mine area are also diverted beneath the disturbed area via properly sized culverts. The culverts tie into the main canyon culvert and undisturbed runoff discharges below the disturbed area as described previously;**

c) **The entire disturbed area (except ~~2~~ 4 small, Alternate Sediment Control Areas), and portions of the undisturbed area not diverted, are drained to the lower end of the property via properly sized ditches and culverts, where runoff is captured in a sedimentation pond.**

d) **~~Two~~ Four small areas are treated as Alternate Sediment Control Areas (A.S.C.A.). ~~These areas consist of a test plot area and the office/pad area. The upper area, ASCA-X, is a test plot area, and drains to the bypass culvert. The lower area, ASCA-Z, is the office/pad area and is treated by a sediment trap.~~**

These areas consist of a test plot/topsoil storage area in the Right Fork, a rip-rapped culvert inlet area in the Left Fork, the office/pad area and a portion of the west side of the county road below the sediment ponds. These areas are described in detail under Section 2.11.

DESIGN OF DRAINAGE CONTROL STRUCTURES

Design Parameters

2.1 Precipitation
2.2 Flow
2.3 Velocity
2.4 Drainage Area
2.5 Slope Lengths
2.6 Runoff
2.7 Runoff Curve Numbers
2.8 Culvert Sizing
2.9 Culverts
2.10 Ditches
2.11 ASCA Areas

Table 1 Undisturbed Drainage Area - Runoff Curve Number Summary
2 Surface Water Hydrologic Summary
3 Undisturbed Drainage Data
4 Undisturbed Drainage Summary
5 Undisturbed Ditch Design Summary
6 Undisturbed Culvert Data
7 Undisturbed Culvert Design Summary
8A Disturbed Areas Data
8B ASCA Areas Data
9 Disturbed Drainage Summary
10 Drainage Structures
11 Drainage Structure Flow Summary
12 Disturbed Ditch Data
13 Disturbed Ditch Design Summary
14 Disturbed Culvert Data
15 Disturbed Culvert Design Summary

Figures

Figure 1 Culvert Nomograph
Figure 2 Rip-Rap Chart
Figure 3 Undisturbed and Disturbed Ditch, Typical Section (Unlined Ditch)
Figure 4 Undisturbed and Disturbed Ditch, Typical Section (Lined Ditch)
Figure 4A Disturbed Ditch/Energy Dissipaters
Figure 5 Undisturbed Culvert Inlet, Typical Section

Figure 6 **Main Bypass Culvert Outlet**

~~**Figure 7** **Office Pad Berm & Oil/Grease Separator**~~

Design Parameters

2.1 Precipitation

The precipitation-frequency values for the area were taken from "NOAA, Precipitation-Frequency Atlas of the Western U.S., Atlas 2, Volume VI.

Frequency - Duration	Precipitation
2 year - 6 hour	0.82"
10 year - 6 hour	1.30"
10 year - 24 hour	2.00"
25 year - 6 hour	1.60"
25 year - 24 hour	2.40
100 year - 6 hour	2.00"
50 year - 24 hour	2.60"

Disturbed ditch and culvert designs for runoff control are based on the 10 year - 24 hour event of 2.00" and the 25 year - 6 hour event of 1.60", where required. Undisturbed culvert designs are based on the 10 year - 24 hour event of 2.00".

The sedimentation pond is designed to contain the runoff from a 10 year - 24 hour event of 2.00" as required by the Division. Reclamation designs are based on the 100 year - 6 hour event of 2.00", where applicable for permanent structures.

ASCA areas are sized to contain or treat runoff from a 10 year - 24 hour precipitation event.

2.2 Flow

Peak flows, flow depths, areas and velocities were calculated using the computer program "Office of Surface Mining Watershed Model", Storm Version 6.20 by Gary E. McIntosh. (Trapezoidal Channel Flow). All flow is based on the SCS - TR55 Method for Type II storms.

Time of concentration of storm events was calculated for each drainage area using the following formula:

$$t_L = \frac{L^{0.8}\,(S+1)^{0.7}}{1900\,Y^{0.5}}$$

where:

t_c	=	Time of Concentration (hrs.)
t_L	=	Lag Time (hrs.) = 0.6 t_c
L	=	Hydraulic Length of Watershed (ft.)
Y	=	Average Land Slope (%)
S	=	$\frac{1000}{CN} - 10$

2.3 Velocity

Flow velocities for each ditch structure were calculated using the Storm computer program with Manning's Formula:

$$V = \frac{1.49}{n} R^{2/3} S^{1/2}$$

where:

V	=	Velocity (fps)
R	=	Hydraulic Radius (ft.)
S	=	Slope (ft. per ft.)
n	=	Manning's n; Table 3.1, p.159,

"Applied Hydrology and Sedimentology for Disturbed Areas", Barfield, Warner & Haan, 1983.

Note: The following Manning's n were used in the calculations:

Structure	Manning's n
Culverts (cmp)	0.020
Rip-rapped or Natural Drainage Channels	0.035 - 0.040
Unlined Disturbed Area Ditches	0.035 - 0.040
Bedrock Channels with Rubble	0.030
Concrete Lined Channels	0.015

2.4 Drainage Areas

All drainage areas were planimetered directly from As-Constructed Maps 7-1 (Drainage Area Map) and 7-2 (Minesite Drainage Plan).

2.5 Slopes, Lengths

All slopes and hydraulic lengths were measured directly from the topography on Maps 7-1 and 7-2.

2.6 Runoff

Runoff was calculated using the SCS Formula for Type II Storm:

$$Q = \frac{(P - 0.2\,S)^2}{P + 0.8\,S}$$

where:

Q	=	Runoff in inches
P	=	Precipitation in inches
S	=	$\frac{1000}{CN} - 10$
CN	=	Runoff Curve Number

2.7 Runoff Curve Numbers

Due to the variability of soil types and resulting runoff potential of the drainage areas, a runoff curve number was calculated for each drainage area using a weighted average. The respective area for each soil type occurring in the drainages were planimetered directly from Map 7-1.

Curve numbers for the various soil types have been discussed with the Division, and are based on the SCS determination for Runoff Curve Numbers for Antecedent Moisture Condition II. Soil types and areas were taken from the SCS Soils Report and the August 1997 Soils Report for the area (see Appendix 1). The following will show the soils type and resulting runoff curve number for each (unit numbers are taken from the Soils Report):

Unit	Description	Hydrologic Soils Group	Runoff Curve Number
5	Beje Complex - Mountain Ridgetops	C	70
7	Beje - Trag Complex - Plateaus	C	70
21	Croydon Loam - Foot Slopes	B	59
62	Mid fork - Comodore Complex - Mountain Slopes	B	64
96	Rubbleland - Travessilla Complex - Rock Outcrop	D	80
Disturbed	Disturbed Area	-	90

The weighted average runoff curve numbers for each drainage area are summarized in Table 1 - "Undisturbed Drainage Areas - Runoff Curve Number Summary".

2.8 Culvert Sizing

All culverts were sized using the "Haestad Methods, Flowmaster I, Version 3.43" Computer Program.

Minimum culvert sizing is based on the following Manning's Equation:

$$D = \left(\frac{2.16\ Q\ n}{\sqrt{S}}\right)^{0.35}$$

where:	D	=	Required Diameter (ft.)
	Q	=	QP = Peak Discharge (cfs)
	n	=	Roughness Factor (0.025 for cmp)
	S	=	Slope (ft. per ft.)

Using the above formula, minimum required culvert sizes were calculated for each applicable area. Culverts were then selected above the required minimum, and these sizes were checked for adequacy against the Culvert Nomograph included as Figure 1 of this report.

2.9 Culverts

Culverts have been sized according to the calculations previously described, and are shown on Map 7-2, Minesite Hydrology. Culverts carrying undisturbed drainages are designated with UC-Letters (i.e. UC-AA). All undisturbed area drainage culverts will be fitted with trash racks to minimize plugging by rocks or other debris.

Trash racks are provided at the inlet for all undisturbed drainage culverts. These consist of 3/4" steel bars welded on 6" centers across the flared inlet structures of each culvert. Bars are sloped from the front of the inlet structure up to the top of the culvert. This ramp configuration will allow trash, branches and other potential obstructions to be swept up and away from the inlet rather than being impinged against the grates during a flow event. Rip rap has been placed around the flared inlet structure and above it to a height of at least 6" above the required headwall for each culvert. Trash racks will be checked on a routine schedule and following

precipitation events and all trash, branches and other obstructions will be removed.

The outlet of the main canyon bypass culvert (UC-OO) has been equipped with an adequately sized rip-rap apron to slow the outlet velocity sufficiently to prevent erosional damage to the natural downstream channel. (See Figure 6).

It should be noted that all undisturbed area culverts are adequately sized to handle the expected runoff from a 100 year - 6 hour event for maximum protection of the mine area, sediment pond and undisturbed drainage. This is well in excess of the 10 year - 6 hour event required by the regulations and is proposed as an extra measure of safety.

Disturbed area culverts and ditches are shown on the Minesite Drainage Plan, Map 7-2. Culverts carrying disturbed drainage are designated with a DC-number (i.e. DC-1). Calculations for all disturbed area culverts and ditches are also included with this report, along with design criteria. Disturbed drainage areas draining to culverts and ditches are marked with a DA-number (i.e. DA-1).

Undisturbed drainage areas report to undisturbed area drainage culverts with corresponding subscripted letters; for example undisturbed drainage area UA-FF reports to undisturbed area drainage culvert UC-FF. Other undisturbed drainage areas, subscripted with numbers, report to disturbed drainage area ditches with corresponding subscripted numbers; for example undisturbed drainage area UA-3 reports to disturbed area drainage ditch DD-3.

Design detail for all undisturbed drainage culverts is shown on the Undisturbed Drainage Culvert Profile, Map 5-8.

Culverts will be inspected regularly, and cleaned as necessary to provide for passage of design flows. Inlets and outlets shall also be maintained so as to prevent plugging or undue restriction of water flow.

All disturbed area culverts are temporary, and will be removed upon final reclamation.

2.10 Ditches

Ditches are shown on the Minesite Drainage Plan, Map 7-2, and are designated with a DD-number (i.e., DD-1) for Disturbed Area Ditches or a UD-Letter (i.e., UD-X) for Undisturbed Area Ditches.

Disturbed drainage areas, along with some undisturbed drainage areas, report to disturbed drainage area ditches with the corresponding subscript number; for example, disturbed drainage area DA-3 (along with undisturbed drainage area UA-3) reports to disturbed drainage area ditch DD-3.

All ditches are designed to carry the expected runoff from a 10 year - 24 hour event with a minimum freeboard of 0.5' (See Figures 3 and 4). The 0.5' freeboard represents a minimum of 20% of the flow depth in all disturbed area ditches.

Ditches which exhibit expected flow velocities greater than 6 fps, based on the 10 year - 24 hour runoff, will be lined with rip-rap or concrete or constructed on bedrock. Typical cross-sections, flow depths and areas for all lined and unlined ditches are shown on Figures 3 and 4 of this report.

The 6 fps limiting velocity for unlined ditches was selected from Table 3.2, Limiting Velocities and Tractive Forces for Open Channels, "Applied Hydrology and Sedimentology for Disturbed Areas", Barfield, Warner & Haan, 1983. The material selected for limiting velocity was Shales and Hardpans and Coarse Gravel Noncollodial, which is typical of the materials in the West Ridge Mine area.

It should be noted that ditch DD-1 has a calculated flow velocity of 6.02 fps. Based on consultation with the Division, this ditch will not be lined unless it exhibits erosion in the future. Three additional ditches have calculated flows in excess of 6 fps. These are ditches DD-4, D-6 and DD-8A. DD-6 is constructed on bedrock, has been in place for 3 years, and shows no sign of eroding into the bedrock. The bedrock is in the ditch bottom and on one side. Supplemental protection will be provided on the remaining side as required by design. DD-8A has been rip-rapped in accordance with the plan. DD-4 will also be protected according to the following plan.

Ditch DD-4 has an as-constructed slope of 6.30%, and a calculated flow velocity of 6.88 fps. This ditch is located in an area of the minesite which will necessitate periodic cleaning; therefore, ~~it is proposed to protect this ditch~~ the ditch is protected from erosion by use of energy dissipaters, rather than rip-rap, which would make cleaning difficult. The energy dissipaters ~~will~~ consist of wire/rock gabions. ~~It is proposed to place~~ 6" high energy

dissipaters have been placed at 100' maximum intervals along the entire ditch. The dissipaters ~~would~~ will be allowed to fill with sediment, which will effectively reduce the ditch slope from 6.30% to 5.70% and the velocity from 6.88 fps to 5.99 fps between dissipaters. The energy dissipaters ~~will be~~ are placed in such a manner as to provide minimum ditch area requirements above the flow line of the structure. Typical installation is shown on Figure 4A of this section.

Ditch slopes have been determined from Map 7-2.

All ditches will be inspected regularly, and maintained to the minimum dimensions for the required 10 year - 24 hour runoff to provide adequate capacity for the design flow. All ditches are temporary and will be removed as described under the reclamation hydrology section. (Section 4)

2.11 Alternate Sediment Control Areas (ASCA)

There are ~~2 proposed~~ 4 Alternate Sediment Control Areas on this site. These areas are labeled ASCA-W, ASCA-X, ASCA-Y and ASCA-Z on the Minesite Drainage Plan.

~~**ASCA-X is the test plot area in the upper right fork of the minesite. The area is 0.99 acres. The test plot area is sloped to drain to undisturbed bypass culvert UC-AA. Sediment control is accomplished with the use of silt fence and vegetation of the test plot area.**~~

~~**ASCA-Z is the proposed office site and parking area located below the sediment pond. This area is proposed to be 1.62 acres. The area will be sloped approximately 2% to the southeast corner of the parking area where the runoff will be treated through an oil/grease separator and sediment trap and flow into a 12" cmp culvert, which will carry the runoff down the slope and into the main channel below. The oil/grease trap and culvert are shown on Map 7-2. Sediment control is proposed to be accomplished by treatment of runoff through the separator/sediment trap and by revegetation of slopes and embankments within the ASCA-Z area.**~~

~~**The drainage to the separator/sediment trap will be from undisturbed area UA-16 and disturbed area DA-Z. Area DA-Z is also ASCA-Z, which is a total of 1.62 acres. Of the total 1.62 acres, approximately 0.83 acres will be pad area and 0.79 acres will be revegetated slope area. A runoff CN of 90 has been used for the pad area, and a CN of 75 was used for the revegetated slope area, resulting in a weighted CN of 83 for the runoff calculated for DA-Z. The peak runoff from a 10 year - 24 hour event for ASCA-Z was calculated at 1.15 cfs, and from UA-16, 0.01 cfs, resulting in a total peak flow of 1.16 cfs. A minimum size culvert to carry this flow would be 0.42' diam; therefore, a 12" culvert is more than adequate. The exit velocity is calculated at 8.29 fps; however, since this discharge will be onto the main minesite culvert riprap and energy dissipater, no new riprap is planned for this discharge. Flow from the parking lot area (DA-Z) and UA-16 will be separated from the undisturbed drainage in UD-Z by a berm at least 18" high, as shown on Figure 7 and Plate 7-2. This berm will also be extended along the lower edge of the parking lot as shown on Plate 7-2, to direct all disturbed drainage to the oil/grease separator. The oil/grease separator will consist of a 3'x3'x3' (or larger) concrete box with a steel grate over the top. The 12" culvert (DC-16) will extend into the box and be fitted with a**~~

~~minimum 6" drop elbow to act as an oil/grease skimmer. This oil/grease separator will also act as a sediment trap, and will be cleaned on an as-needed basis. Design details for the oil/grease separator are shown on Figure 7.~~

ASCA -W is the portion of the west side of the county road from Culvert DC-12 to the County Culvert below the Office Pad. The total ASCA area is 1.33 acres. The area is drained by ditch UD-15. Sediment treatment is accomplished by straw bales or silt fences in the ditch, as well as side slope revegetation.

ASCA-X is the test plot area and upper portion of the topsoil storage area in the upper right fork of the minesite. The total area is 1.19 acres. Approximately 0.14 acres is the test plot area. The upper end of the topsoil pile within the ASCA is approximately 0.16 acres. This area utilizes a containment. The containment has been measured and found to have a volume of 0.04 acre feet as shown on Figure 7. The calculation of runoff from the area draining to the containment from a 10 year - 24 hour event is 0.01 acre feet; therefore, the containment is more than adequate to hold the runoff from the design event. The containment is presently 3' in depth. When sediment accumulates to one half that depth, or 1.5', the containment will be cleaned. A marker will be placed to designate the cleaning level. All treatment methods utilized within ASCA-X are shown within the ASCA legend on Map 7-2. The balance of the ASCA is considered undisturbed.

ASCA-Y is a rip-rapped area from the pad to the culvert inlet in the upper end of the left fork of the minesite. This is an area of approximately 0.04 acres. The area is treated by a complete covering of large rock to prevent erosion.

ASCA-Z is the office pad area. This is an area of approximately 1.62 acres. The area is sloped to drain to the northeast where runoff is primarily retained and evaporated. Also installed at the retention area are a small drain and gravel field to provide some percolation of runoff from small events. Larger, design events, are primarily treated by containment and evaporation with minor treatment by absorption or percolation. The entire pad area is covered with a durable rock (slag). The ASCA also includes the outslope of the lower pad down to the main channel. This area is treated by a rock armor, vegetation and a silt fence below.

2.12 Main Canyon Culvert - Outlet Structure

The outlet of the 4' diameter main canyon culvert has been designed to flow into a rip-rap apron to protect against scouring and for energy dissipation. The rip-rap apron is designed to fit the natural channel configuration as closely as possible, and will allow runoff to re-enter the natural channel at a reduced velocity which is no greater than natural flow conditions. Runoff from the 100 year - 6 hour precipitation event in the canyon below the minesite has been calculated at 100.01 cfs, including sediment pond overflow.

The rip-rap apron design is based on Figure 7-26, Design of Outlet Protection - Maximum Tailwater Condition, "Applied Hydrology and Sedimentology for Disturbed Areas", Barfield, Warner and Haan, 1983. Based on the figure, the constructed apron is a minimum of 15' in length, widening from 4' to 10', with a 0% slope. The length has been increased to 20', to ensure adequate time for velocity reduction. The slope is kept at 0%. Rip-rap size is conservatively placed at 24" D_{50}. Rip-rap has been placed to a depth of 1.5 D_{50} and embedded in a 12" layer of 2" drain rock filter. Rip-rap has also been placed on 2:1 side slopes to the height of the culvert (4') at the culvert outlet tapering to 2' at the outlet of the apron. This rip rap apron has been sized and designed to adequately dissipate energy from flow velocities of a 100 year, 6 hour precipitation event and resist dislodgement. The drain rock filter bed will also serve to secure the rip rap boulders firmly in place, to add an additional element of stability, and prevent scouring underneath the boulder bed. (See Figure 6 for construction details). The natural channel below the outlet has been measured from field surveys to have a bottom width of approximately 8' at the proposed outlet, with side slopes approximately 1:1. The channel is on a gradient of approximately 6.30% in this area. When the flow is routed from the culvert across the apron to the natural channel, the velocity is reduced from 13.61 fps at the culvert outlet to 4.99 fps at the outlet of the apron. Based on actual field measurements, the natural channel velocity would be approximately 9.99 fps at this location with the same flow of 100.01 cfs. Therefore, velocity of the stream flow exiting the rip-rap apron will be less than the velocity in the naturally existing stream bed, at that location, under similar conditions. (See 48" Culvert Outlet Rip-rap Apron Flow Velocity Calculations in Appendix 1.)

It should be noted that these calculations are based on a 100 year - 6 hour event, even though the culvert is temporary and will be removed upon reclamation.

2.13 Rip-Rap Design

Wherever rip-rap is designated to be used, i.e. Culvert Outlets or Unlined Ditches, the following procedure shall be used:

(1) Rip-rap will consist of hard, non-slaking angular, material;

(2) Rip-rap shall meet the following size criteria:

Rip-Rap Sizing	Percent (+ or - 10%)
0.1 D_{50} - 0.5 D_{50}	20
0.5 D_{50} - 1.0 D_{50}	30
1.0 D_{50} - 2.0 D_{50}	50

(3) Rip-rap shall be placed over a filter bedding consisting of -3/4" gravel and placed to a depth of at least the D_{50} of the rip-rap;

(4) Rip-rap depth shall be at least 1.5 times the D_{50} of the material;

(5) Concrete lining or grouting of rip-rap may be used in lieu of the above procedures.

TABLE 1

UNDISTURBED DRAINAGE AREAS - RUNOFF CURVE NUMBER SUMMARY

	CN	59	70	64	80	70	
Drainage Area ID	Total Acres	Unit 21	Unit 5	Unit 62	Unit 96	Unit 7	Weighted CN
UA-AA	732.00	90.51	12.97	218.82	375.63	34.07	71.98
%		12.5%	1.8%	29.9%	51.3%	4.5%	Use 72
UA-DD	22.46		3.39	19.07			64.91
%		0.0%	15.1%	84.9%	0.0%	0.0%	Use 65
UA-FF	23.32		2.61	20.71			64.67
%		0.0%	11.2%	88.8%	0.0%	0.0%	Use 65
UA-HH	236.80	43.21			181.91	11.68	75.67
%		18.2%	0.0%	0.0%	76.8%	5.0%	Use 76
UA-JJ	7.21				7.21		80.00
%		0.0%	0.0%	0.0%	100.0%	0.0%	Use 80
UA-MM	13.78		0.62	13.16			64.27
%		0.0%	4.5%	95.5%	0.0%	0.0%	Use 64
UA-PP	16.90		0.19	15.97	0.74		64.77
%		0.0%	1.1%	94.5%	4.4%	0.0%	Use 65

TABLE 1 (Continued)
UNDISTURBED DRAINAGE AREAS - RUNOFF CURVE NUMBER SUMMARY

	CN=	59	70	64	80	70	
Drainage Area ID	**Total Acres**	**Unit 21**	**Unit 5**	**Unit 62**	**Unit 96**	**Unit 7**	**Weighted CN**
UA-1a	10.27		0.17	10.10			64.10
%		0.0%	1.7%	98.3%	0.0%	0.0%	Use 64
UA-1b	14.53			0.46	14.07		79.49
%		0.0%	0.0%	3.2%	96.8%	0.0%	Use 80
UA-2a	3.55			3.55			64.00
%		0.0%	0.0%	100.0%	0.0%	0.0%	Use 64
UA-2b	10.25			0.04	10.21		79.93
%		0.0%	0.0%	0.4%	99.6%	0.0%	Use 80
UA-3	7.77				7.77		80.00
%		0.0%	0.0%	0.0%	100.0%	0.0%	Use 80
UA-4	3.57			3.57			64.00
%		0.0%	0.0%	100.0%	0.0%	0.0%	Use 64
UA-5	1.28			1.28			64.00
%		0.0%	0.0%	100.0%	0.0%	0.0%	Use 64
UA-7	2.97			2.97			64.00
%		0.0%	0.0%	100.0%	0.0%	0.0%	Use 64
UA-8	0.81				0.81		80.00
%		0.0%	0.0%	0.0%	100.0%	0.0%	Use 80
UA-9	3.43			3.43			64.00

TABLE 1 (Continued)

UNDISTURBED DRAINAGE AREAS - RUNOFF CURVE NUMBER SUMMARY

	CN=	59	70	64	80	70	
Drainage Area ID	Total Acres	Unit 21	Unit 5	Unit 62	Unit 96	Unit 7	Weighted CN
%		0.0%	0.0%	100.0%	0.0%	0.0%	Use 64
UA-10a	3.71	1.00			2.71		74.34
%		27.0%	0.0%	0.0%	73.0%	0.0%	Use 74
UA-10b	3.85				3.85		80.00
%		0.0%	0.0%	0.0%	100.0%	0.0%	Use 80
UA-10c	1.50				1.50		80.00
%		0.0%	0.0%	0.0%	100.0%	0.0%	Use 80
UA-12	12.59				12.59		80.00
%		0.0%	0.0%	0.0%	100.0%	0.0%	Use 80
UA-14	4.30			4.30			64.00
%		0.0%	0.0%	100.0%	0.0%	0.0%	Use 64
UA-15	5.10				5.10		80.00
%		0.0%	0.0%	0.0%	100.0%	0.0%	Use 80
UA-16	0.51			0.51			64.00
%		0.0%	0.0%	100.0%	0.0%	0.0%	Use 64

TABLE 2
HYDROLOGIC SUMMARY

Drainage	Area (acres)	Type	Drains To:	Runoff CN
UA-AA	732.00	UNDISTURBED	CULVERT UC-AA	72
UA-DD	22.46	UNDISTURBED	CULVERT UC-DD	65
UA-FF	23.32	UNDISTURBED	CULVERT UC-FF	65
UA-HH	236.80	UNDISTURBED	CULVERT UC-HH	76
UA-JJ	7.21	UNDISTURBED	CULVERT UC-JJ	80
UA-MM	13.78	UNDISTURBED	CULVERT UC-MM	64
UA-PP	16.90	UNDISTURBED	CULVERT UC-PP	65
UA-1a	10.27	UNDISTURBED	SEDIMENT POND	64
UA-1b	14.53	UNDISTURBED	SEDIMENT POND	80
UA-2a	3.55	UNDISTURBED	SEDIMENT POND	64
UA-2b	10.25	UNDISTURBED	SEDIMENT POND	80
UA-3	7.77	UNDISTURBED	SEDIMENT POND	80
UA-4	3.57	UNDISTURBED	SEDIMENT POND	64
UA-5	1.28	UNDISTURBED	SEDIMENT POND	64
UA-7	2.97	UNDISTURBED	SEDIMENT POND	64
UA-8	0.81	UNDISTURBED	SEDIMENT POND	80
UA-9	3.43	UNDISTURBED	SEDIMENT POND	64
UA-10a	3.71	UNDISTURBED	SEDIMENT POND	74
UA-10b	3.85	UNDISTURBED	SEDIMENT POND	80
UA-10c	1.50	UNDISTURBED	SEDIMENT POND	80
UA-12	12.59	UNDISTURBED	SEDIMENT POND	80
UA-14	4.30	UNDISTURBED	SEDIMENT POND	64
UA-15	5.10	UNDISTURBED	COUNTY ROAD	80
UA-16	0.51	UNDISTURBED	SILT FENCE	64
DA-W	1.33	DISTURBED (ASCA)	COUNTY CULVERT	90
DA-X	~~0.99~~ 1.19	DISTURBED (ASCA)	CULVERT UC-AA	90
DA-Y	0.04	DISTURBED (ASCA)	CULVERT UC-HH	90
DA-Z	1.62	DISTURBED (ASCA)	CULVERT DC-16	83

TABLE 3
UNDISTURBED DRAINAGE AREA DATA

Area ID	Hydraulic Length	High Elevation	Low Elevation	Change Elevation	Slope %	Runoff CN
UA-AA	6400	8866	7128	1738	27.16	72
UA-DD	1650	8040	7100	940	56.97	65
UA-FF	1579	8080	7080	1000	63.33	65
UA-HH	4262	8680	7064	1616	37.92	76
UA-JJ	1285	7980	7094	886	68.95	80
UA-MM	1722	8115	7002	1113	64.63	64
UA-PP	1723	8115	6932	1183	68.66	65
UA-1a	1556	8038	7108	930	59.77	64
UA-1b	1427	7920	7120	800	56.06	80
UA-2a	917	7720	7110	610	66.52	64
UA-2b	972	7880	7112	768	79.01	80
UA-3	780	7700	7122	578	74.10	80
UA-4	850	7720	7092	628	73.88	64
UA-5	400	7420	7122	298	74.50	64
UA-7	880	7620	7052	568	64.55	64
UA-8	403	7480	7132	348	86.35	80
UA-9	850	7620	7036	584	68.71	64
UA-10a	605	7640	7112	528	87.27	74
UA-10b	1282	7980	7106	874	68.17	80
UA-10c	571	7440	7070	370	64.80	80
UA-12	1250	7890	6996	894	71.52	80
UA-14	630	7400	6982	418	66.35	64
UA-15	580	7440	6968	472	81.38	80
UA-16	340	7220	6948	272	80.00	64

TABLE 4
UNDISTURBED DRAINAGE SUMMARY

Drainage Area	10 yr - 6 hr 1.30"	10 yr - 24 hr 2.00"		25 yr- 6 hr 1.60"	100 yr - 6 hr 2.00"
	Peak Flow (Cfs)	Peak Flow (Cfs)	Runoff (ac.ft)	Peak Flow (Cfs)	Peak Flow (Cfs)
UA-AA	12.48	44.04	17.83	24.94	45.45
UA-DD	0.15	0.64	0.25	0.44	0.92
UA-FF	0.16	0.67	0.26	0.46	0.95
UA-HH	7.37	32.78	8.16	13.05	25.44
UA-JJ	0.50	2.65	0.34	1.12	2.16
UA-MM	0.07	0.32	0.14	0.24	0.52
UA-PP	0.11	0.49	0.19	0.33	0.69
UA-1a*	0.05	0.24	0.1	0.18	0.38
UA-1b*	0.97	5.20	0.68	2.19	4.22
UA-2a*	0.02	0.09	0.03	0.06	0.13
UA-2b*	0.75	3.84	0.48	1.64	3.13
UA-3*	0.58	2.93	0.36	1.26	2.39
UA-4*	0.02	0.09	0.04	0.06	0.13
UA-5*	0.01	0.03	0.01	0.02	0.04
UA-7*	0.01	0.07	0.03	0.05	0.11
UA-8*	0.06	0.32	0.04	0.14	0.26
UA-9*	0.02	0.08	0.03	0.06	0.12
UA-10a*	0.10	0.78	0.11	0.21	0.58
UA-10b*	0.27	1.42	0.18	0.6	1.15
UA-10c*	0.11	0.58	0.07	0.25	0.47
UA-12*	0.88	4.65	0.59	1.97	3.78
UA-14*	0.02	0.11	0.04	0.07	0.15
UA-15	0.39	1.97	0.24	0.85	1.61
UA-16	0.00	0.01	0.01	0.01	0.02
*Undisturbed Drainage to Pond			2.79	8.76	

TABLE 5
UNDISTURBED DITCH DESIGN SUMMARY

Ditch	UD-Z	UD-15
Ditch Slope (%)	~~1.0~~ 16.0	7.6
Ditch Length (ft.)	~~151.0~~ 80.0	864.8
10 yr - 6 hr Event (in.)	1.30	1.30
Peak Flow - 10/6 (cfs)	0.11	1.05
Velocity - 10/6 (fps)	~~0.96~~ 2.71	3.61
Min. Ditch Area (ft^2)	~~0.11~~ 0.04	0.29
Min. Flow Depth (ft.)	~~0.24~~ 0.14	0.38
10 yr - 24 hr Event (in.)	2.00	2.00
Peak Flow - 10/24 (cfs)	0.49	3.43
Velocity - 10/24 (fps)	~~1.39~~ 3.94	4.85
Min. Ditch Area (ft^2)	~~0.35~~ 0.12	0.71
Min. Flow Depth (ft.)	~~0.42~~ 0.25	0.59

TABLE 6
UNDISTURBED CULVERT DATA
(BYPASS CULVERTS)

Segment ID	Length	Slope %	Manning's No.
UC-AA	413.0	7.0%	0.020
UC-DD	128.8	28.0%	0.020
UC-EE	1022.2	6.4%	0.020
UC-FF	221.0	20.0%	0.020
UC-GG	841.8	6.4%	0.020
UC-HH	416.7	10.2%	0.020
UC-JJ	191.3	27.2%	0.020
UC-KK	613.8	10.0%	0.020
UC-LL	36.6	6.7%	0.020
UC-MM	138.6	36.0%	0.020
UC-NN	592.8	6.7%	0.020
UC-OO	392.6	4.8%	0.020
*UC-PP	240.0	16.0%	0.020
**UC-RR	3.0	5.0%	0.020

* 2 Inlets.

** Carries lower 1/3 of UA-PP Drainage.

TABLE 7

UNDISTURBED CULVERT DESIGN SUMMARY

Culvert	10 yr - 6 hr Event 1.30"			10 yr - 24 hr Event 2.00"			25 yr - 6 hr Event 1.60"		
	Peak Flow Cfs	Velocity fps	Min. Diam. Req'd - Ft	Peak Flow Cfs	Velocity fps	Min. Diam. Req'd - Ft	Peak Flow Cfs	Velocity fps	Min. Diam. Req'd - Ft
~~UC-AA~~	~~12.89~~	~~9.40~~	~~1.32~~	~~44.94~~	~~12.84~~	~~2.11~~	~~25.53~~	~~11.15~~	~~1.71~~
~~UC-DD~~	~~0.15~~	~~5.19~~	~~0.19~~	~~0.64~~	~~7.46~~	~~0.33~~	~~0.44~~	~~6.79~~	~~0.29~~
~~UC-EE~~	~~13.04~~	~~9.11~~	~~1.35~~	~~45.58~~	~~12.46~~	~~2.16~~	~~25.97~~	~~10.82~~	~~1.75~~
~~UC-FF~~	~~0.16~~	~~4.65~~	~~0.21~~	~~0.67~~	~~6.65~~	~~0.36~~	~~0.46~~	~~6.05~~	~~0.31~~
~~UC-GG~~	~~13.20~~	~~9.14~~	~~1.36~~	~~46.25~~	~~12.50~~	~~2.17~~	~~26.43~~	~~10.87~~	~~1.76~~
~~UC-HH~~	~~7.37~~	~~9.41~~	~~1.00~~	~~32.78~~	~~13.66~~	~~1.75~~	~~13.05~~	~~10.85~~	~~1.24~~
~~UC-JJ~~	~~0.50~~	~~6.94~~	~~0.30~~	~~2.65~~	~~10.52~~	~~0.57~~	~~1.12~~	~~8.49~~	~~0.41~~
~~UC-KK~~	~~7.87~~	~~9.49~~	~~1.03~~	~~35.43~~	~~13.83~~	~~1.81~~	~~14.17~~	~~11.00~~	~~1.28~~
~~UC-LL~~	~~21.07~~	~~10.45~~	~~1.60~~	~~81.68~~	~~14.66~~	~~2.66~~	~~40.60~~	~~12.31~~	~~2.05~~
~~UC-MM~~	~~0.07~~	~~4.71~~	~~0.14~~	~~0.32~~	~~6.89~~	~~0.24~~	~~0.24~~	~~6.41~~	~~0.22~~
~~UC-NN~~	~~21.14~~	~~10.46~~	~~1.60~~	~~82.00~~	~~14.68~~	~~2.67~~	~~40.84~~	~~12.33~~	~~2.05~~
~~UC-OO~~	~~44.87~~	~~11.14~~	~~2.26~~	~~105.73~~	~~13.80~~	~~3.12~~	~~64.57~~	~~12.20~~	~~2.60~~
~~UC-PP~~	~~0.11~~	~~3.89~~	~~0.19~~	~~0.49~~	~~5.66~~	~~0.33~~	~~0.33~~	~~5.12~~	~~0.29~~
UC-AA	12.97	9.41	1.32	45.12	12.85	2.11	25.65	11.16	1.71
UC-DD	0.15	5.19	0.19	0.64	7.46	0.33	0.44	6.79	0.29
UC-EE	13.12	9.13	1.35	45.76	12.47	2.16	26.09	10.84	1.75
UC-FF	0.16	4.65	0.21	0.67	6.65	0.36	0.46	6.05	0.31
UC-GG	13.28	9.15	1.36	46.43	12.52	2.17	26.55	10.88	1.76

UC-HH	7.39	9.42	1.00	32.82	13.67	1.75	13.08	10.86	1.24
UC-JJ	0.50	6.94	0.30	2.65	10.52	0.57	1.12	8.49	0.41
UC-KK	7.89	9.50	1.03	35.47	13.83	1.81	14.20	11.00	1.28
UC-LL	21.17	10.46	1.61	81.90	14.67	2.67	40.75	12.32	2.05
UC-MM	0.07	4.71	0.14	0.32	6.89	0.24	0.24	6.41	0.22
UC-NN	21.24	10.47	1.61	82.22	14.69	2.67	40.99	12.34	2.06
UC-OO	44.97	11.15	2.27	105.95	13.81	3.13	64.72	12.21	2.60
UC-PP	0.11	3.89	0.19	0.49	5.66	0.33	0.33	5.12	0.29
*UC-RR	0.04	1.95	0.16	0.16	2.76	0.27	0.11	2.52	0.24

* Carries 1/3 of drainage from UA-PP.

TABLE 7 (Continued)
UNDISTURBED CULVERT DESIGN SUMMARY

Culvert	100 yr - 6 hr Event 2.00"			Recommended Construction (Diameter) (Ft.)	Flow Capacity (Cfs)	Headwater Req'd (ft.)
	Peak Flow Cfs	Velocity fps	Min. Diam. Req'd - Ft			
~~UC-AA~~	~~46.29~~	~~12.93~~	~~2.13~~	~~3.5~~	~~173.02~~	~~—~~
~~UC-DD~~	~~0.92~~	~~8.17~~	~~0.38~~	~~1.5~~	~~36.13~~	~~—~~
~~UC-EE~~	~~47.21~~	~~12.57~~	~~2.19~~	~~3.5~~	~~165.44~~	~~—~~
~~UC-FF~~	~~0.95~~	~~7.26~~	~~0.41~~	~~1.5~~	~~30.53~~	~~—~~
~~UC-GG~~	~~48.16~~	~~12.63~~	~~2.20~~	~~3.5~~	~~165.44~~	~~—~~
~~UC-HH~~	~~25.44~~	~~12.82~~	~~1.59~~	~~2.0~~	~~46.96~~	~~—~~
~~UC-JJ~~	~~2.16~~	~~10.00~~	~~0.52~~	~~1.5~~	~~35.61~~	~~—~~
~~UC-KK~~	~~27.60~~	~~12.99~~	~~1.64~~	~~3.0~~	~~137.10~~	~~—~~
~~UC-LL~~	~~75.76~~	~~14.39~~	~~2.59~~	~~4.0~~	~~241.68~~	~~—~~
~~UC-MM~~	~~0.52~~	~~7.78~~	~~0.29~~	~~1.5~~	~~40.97~~	~~—~~
~~UC-NN~~	~~76.28~~	~~14.42~~	~~2.60~~	~~4.0~~	~~241.68~~	~~—~~
~~UC-OO~~	~~100.01~~	~~13.61~~	~~3.06~~	~~4.0~~	~~204.56~~	~~—~~
~~UC-PP~~	~~0.69~~	~~6.16~~	~~0.38~~	~~1.5~~	~~27.31~~	~~—~~
UC-AA	46.45	12.94	2.14	3.5	173.02	-
UC-DD	0.92	8.17	0.38	1.5	36.13	-
UC-EE	47.37	12.58	2.19	3.5	165.44	-
UC-FF	0.95	7.26	0.41	1.5	30.53	-
UC-GG	48.32	12.64	2.21	3.5	165.44	-
UC-HH	25.48	12.83	1.59	2.0	46.96	-
UC-JJ	2.16	10.00	0.52	1.5	35.61	-
UC-KK	27.64	13.00	1.65	3.0	137.10	-
UC-LL	75.96	14.40	2.59	4.0	241.68	-
UC-MM	0.52	7.78	0.29	1.5	40.97	-
UC-NN	76.48	14.42	2.60	4.0	241.68	-
UC-OO	100.21	13.62	3.06	4.0	204.56	-
UC-PP	0.69	6.16	0.38	1.5	27.31	-

*UC-RR	0.23	3.03	0.31	3 x 0.75	3 x 2.40	-

* Carries 1/3 of drainage from UA-PP.

TABLE 8A
DISTURBED AREAS DATA

Area ID	Acres	Hydraulic Length	High Elevation	Low Elevation	Change Elevation	Slope %	Runoff CN
DA-1	1.83	362.7	7112	7076	36	9.93	90
DA-2	1.44	273.1	7076	7068	8	2.93	90
DA-3	1.33	955.5	7112	7068	44	4.60	90
DA-4	1.41	505.4	7068	7038	30	5.94	90
DA-4a	1.42	436.6	7064	7038	26	5.96	90
DA-5	1.96	186.0	7090	7026	64	34.41	90
DA-6	0.82	287.6	7092	7010	82	28.51	90
DA-7	1.00	283.3	7042	7006	36	12.71	90
DA-8	1.52	437.4	7084	7006	78	17.83	90
DA-9	1.76	524.0	7008	6974	34	6.49	90
DA-10	4.26	831.8	7064	6992	72	8.66	90
DA-11	0.62	267.4	6970	6962	8	2.99	90
DA-12	1.49	495.6	7026	6950	76	15.33	90
DA-13	0.58	461.0	6992	6964	28	6.07	90
DA-14	2.14	504.4	6974	6940	34	6.74	90
DA-15	1.33	877.6	6968	6884	84	9.57	90

TABLE 8B
ASCA AREAS DATA

Area ID	Acres	Hydraulic Length	High Elevation	Low Elevation	Change Elevation	Slope %	Runoff CN
*DA-W	1.33	877.6	6968	6884	84	9.57	90
DA-X	~~0.99~~ 1.19	340.4	7128	7094	34	9.99	90
DA-Y	0.04	35.0	7075	7064	11	31.43	90
DA-Z	1.62	278.1	6918	6913	5	1.80	83

* Same as DA-15.

TABLE 9
DISTURBED DRAINAGE SUMMARY

Drainage	10 yr - 6 hr 1.30"	10 yr - 24 hr 2.00"		25 yr - 6 hr 1.60"	100 yr - 6 hr 2.00"
	Peak Flow Cfs	Peak Flow Cfs	Runoff ac. ft.	Peak Flow Cfs	Peak Flow Cfs
DA-1	0.77	1.69	0.17	1.11	1.57
DA-2	0.66	1.46	0.13	0.95	1.36
DA-3	0.60	1.37	0.12	0.87	1.26
DA-4	0.68	1.50	0.13	0.98	1.39
DA-4a	0.67	1.47	0.13	0.96	1.37
DA-5	0.56	1.22	0.18	0.80	1.14
DA-6	0.28	0.61	0.07	0.40	0.56
DA-7	0.38	0.84	0.09	0.55	0.78
DA-8	0.62	1.37	0.14	0.89	1.27
DA-9	0.85	1.87	0.16	1.22	1.74
DA-10	2.10	4.66	0.39	3.03	4.32
DA-11	0.28	0.62	0.06	0.41	0.58
DA-12	0.65	1.42	0.14	0.93	1.32
DA-13	0.28	0.61	0.05	0.40	0.56
DA-14	1.02	2.25	0.20	1.47	2.09
DA-15**/ DA-W	0.66	1.46	0.12	0.95	1.35
DA-X*	~~0.41~~ 0.49	~~0.90~~ 1.08	~~0.09~~ 0.11	~~0.59~~ 0.71	~~0.84~~ 1.00
DA-Y*	0.02	0.04	0.01	0.03	0.04
DA-Z*	0.36	1.15	0.09	0.62	1.01
Drainage to Pond			2.16	14.97	

* ASCA areas do not drain to pond.

** Drains to County Road.

TABLE 10
DRAINAGE STRUCTURES

Structure	Drainage From:	Remarks:
UC-AA	UA-AA, DA-X	Right Fork Undisturbed + ASCA-X
UC-DD	UA-DD	Right Fork Undisturbed
UC-EE	UC-AA and UC-DD	Right Fork Undisturbed + ASCA-X
UC-FF	UA-FF	Right Fork Undisturbed
UC-GG	UC-AA Thru UC-FF	Right Fork Undisturbed + ASCA-X
UC-HH	UA-HH, DA-Y	Left Fork Undisturbed + ASCA-Y
UC-JJ	UA-JJ	Left Fork Undisturbed
UC-KK	UC-HH and UC-JJ	Left Fork Undisturbed + ASCA-Y
UC-LL	UC-AA Thru UC-KK	Main Canyon
UC-MM	UA-MM	Main Canyon
UC-NN	UC-AA Thru UC-MM	Main Canyon
UC-OO	UC-NN + Sediment Pond Overflow	Main Canyon + Ponds
UC-PP	UA-PP	Main Canyon (Below Pond)
UC-RR	1/3 OF UA-PP	Main Canyon (Below Pond)
UD-Z	UA-PP	Main Canyon (UC-PP)
UD-15	UA-15, DA-15	County Road
DD-1	UA-1a, UA-1b, DA-1	
DD-2	DD-1, UA-2a, UA-2b, DA-2	
DD-3	UA-3, DA-3	
DD-4	DD-2, DD-3, DA-4	
DD-4a	DA-4a, UA-4	
DD-5	DD-4a, UA-5, DA-5	
DD-6	DA-6, DD-4, DD-5	
DD-8	DA-8, UA-8	
DD-8a	DD-6, DD-8	
DD-9	UA-7, DA-7, UA-9, DA-9	
DD-10	UA-10a, UA-10b, UA-10c, DA-10	
DD-11	DA-11, DD-8a	
DD-12	DD-10, UA-12, DA-12	
DD-13	DA-13	

TABLE 10 (Continued)
DRAINAGE STRUCTURES

DC-2	DD-2 + DD-3	
DC-4a	DD-4a	
DC-5	DA-5, UA-5	
DC-6	DD-5	
DC-7	DD-6, DD-8	
DC-8	DA-8	
DC-8a	DD-8a	
DC-9	DD-9	To Upper Pond
DC-10	DA-10	
DC-10A	DD-10	
DC-11	DD-11	
DC-12	DD-12	To Lower Pond
DC-13	DD-11, DD-13	To Upper Pond
~~DC-16~~	~~UA-16, DA-Z~~	~~ASCA-Z - Oil/Grease Separator~~

TABLE 11
DRAINAGE STRUCTURE FLOW SUMMARY

Structure	10/6 Cfs	10/24 Cfs	25/6 Cfs	100/6 Cfs	Flows To:
~~UC-AA~~	~~12.89~~	~~44.94~~	~~25.53~~	~~46.29~~	~~Undisturbed Bypass~~
~~UC-DD~~	~~0.15~~	~~0.64~~	~~0.44~~	~~0.92~~	~~Undisturbed Bypass~~
~~UC-EE~~	~~13.04~~	~~45.58~~	~~25.97~~	~~47.21~~	~~Undisturbed Bypass~~
~~UC-FF~~	~~0.16~~	~~0.67~~	~~0.46~~	~~0.95~~	~~Undisturbed Bypass~~
~~UC-GG~~	~~13.20~~	~~46.25~~	~~26.43~~	~~48.16~~	~~Undisturbed Bypass~~
~~UC-HH~~	~~7.37~~	~~32.78~~	~~13.05~~	~~25.44~~	~~Undisturbed Bypass~~
~~UC-JJ~~	~~0.50~~	~~2.65~~	~~1.12~~	~~2.16~~	~~Undisturbed Bypass~~
~~UC-KK~~	~~7.87~~	~~35.43~~	~~14.17~~	~~27.60~~	~~Undisturbed Bypass~~
~~UC-LL~~	~~21.07~~	~~81.68~~	~~40.60~~	~~75.76~~	~~Undisturbed Bypass~~
~~UC-MM~~	~~0.07~~	~~0.32~~	~~0.24~~	~~0.52~~	~~Undisturbed Bypass~~
~~UC-NN~~	~~21.14~~	~~82.00~~	~~40.84~~	~~76.28~~	~~Undisturbed Bypass~~
~~UC-OO~~	~~44.87~~	~~105.73~~	~~64.57~~	~~100.01~~	~~Undisturbed Bypass~~
UC-AA	12.97	45.12	25.65	46.45	Undisturbed Bypass
UC-DD	0.15	0.64	0.44	0.92	Undisturbed Bypass
UC-EE	13.12	45.76	26.09	47.37	Undisturbed Bypass
UC-FF	0.16	0.67	0.46	0.95	Undisturbed Bypass
UC-GG	13.28	46.43	26.55	48.32	Undisturbed Bypass
UC-HH	7.39	32.82	13.08	25.48	Undisturbed Bypass
UC-JJ	0.50	2.65	1.12	2.16	Undisturbed Bypass
UC-KK	7.89	35.47	14.20	27.64	Undisturbed Bypass
UC-LL	21.17	81.90	40.75	75.96	Undisturbed Bypass
UC-MM	0.07	0.32	0.24	0.52	Undisturbed Bypass
UC-NN	21.24	82.22	40.99	76.48	Undisturbed Bypass
UC-OO	44.97	105.95	64.72	100.21	Undisturbed Bypass
UC-PP	0.11	0.49	0.33	0.69	Undisturbed Bypass
*UC-RR	0.04	0.16	0.11	0.23	Undisturbed Bypass
UD-Z	0.11	0.49	0.33	0.69	Main Canyon
UD-15	1.05	3.43	1.80	2.96	County Road
DD-1	1.79	7.13	3.48	6.17	Sediment Pond
DD-2	3.22	12.52	6.13	10.79	Sediment Pond
DD-3	1.18	4.30	2.13	3.65	Sediment Pond

Structure	10/6 Cfs	10/24 Cfs	25/6 Cfs	100/6 Cfs	Flows To:
DD-4	5.08	18.32	9.24	15.83	Sediment Pond
DD-4a	0.69	1.56	1.02	1.50	Sediment Pond
DD-5	1.26	2.81	1.84	2.68	Sediment Pond
DD-6	6.62	21.74	11.48	19.07	Sediment Pond
DD-8	0.68	1.69	1.03	1.53	Sediment Pond
DD-8a	7.30	23.43	12.51	20.60	Sediment Pond
DD-9	1.26	2.86	1.88	2.75	Sediment Pond
DD-10	2.58	7.44	4.09	6.52	Sediment Pond
DD-11	7.58	24.05	12.92	21.18	Sediment Pond
DD-12	4.11	13.51	6.99	11.62	Sediment Pond
DD-13	0.28	0.61	0.40	0.56	Sediment Pond

* Carries 1/3 of drainage from UA-PP.

TABLE 11 (Continued)
DRAINAGE STRUCTURE FLOW SUMMARY

Structure	10/6 Cfs	10/24 Cfs	25/6 Cfs	100/6 Cfs	Flows To:
DC-2	20.67	79.25	39.63	73.8	Sediment Pond
DC-4a	7.89	35.47	14.2	27.64	Sediment Pond
DC-5	0.57	1.25	0.82	1.18	Sediment Pond
DC-6	1.26	2.81	1.84	2.68	Sediment Pond
DC-7	21.31	82.54	41.23	77	Sediment Pond
DC-8	0.62	1.37	0.89	1.27	Sediment Pond
DC-8a	7.3	23.43	12.51	20.6	Sediment Pond
DC-9	1.26	2.86	1.88	2.75	To Upper Pond
DC-10	2.58	7.44	4.09	6.52	Sediment Pond
DC-11	7.58	24.05	12.92	21.18	Sediment Pond
DC-12	4.11	13.51	6.99	11.62	To Lower Pond
DC-13	7.86	24.66	13.32	21.74	To Upper Pond
~~DC-16~~	~~0.36~~	~~1.16~~	~~0.63~~	~~1.03~~	~~Main Channel~~

TABLE 12
DISTURBED DITCH DATA

Area ID	Hydraulic Length	High Elevation	Low Elevation	Change Elevation	Slope %	Runoff CN	Manning's No.
DD-1	323.70	7102	7075	27	8.3	90	0.035
DD-2	258.90	7075	7068	7	2.7	90	0.035
DD-3	977.50	7112	7068	44	4.5	90	0.035
DD-4	763.00	7068	7020	48	* 6.3	90	0.040
DD-4A	210.50	7044	7038	6	2.9	90	0.035
DD-5	190.00	7024	7021	3	1.6	90	0.035
DD-6	189.30	7020	7008	12	6.3	90	0.030
DD-8	268.90	7038	7008	30	11.2	90	0.035
DD-8A	207.90	7006	6988	18	8.7	90	0.035
DD-9	445.80	7002	6974	28	6.3	90	0.035
DD-10	88.00	6992	6990	2	2.0	90	0.035
DD-11	242.80	6966	6962	4	1.6	90	0.035
DD-12	428.20	6968	6950	18	4.2	90	0.035
DD-13	422.30	6971	6964	7	1.7	90	0.035

*** Effective slope to be reduced to 5.70% with use of energy dissipaters.**

TABLE 13
DISTURBED DITCH DESIGN SUMMARY

Ditch Structure	DD-1	DD-2	DD-3	DD-4	DD-4A
10 yr - 6 hr event (in.)	1.30	1.30	1.30	1.30	1.30
Peak Flow (cfs)	1.79	3.22	1.18	5.08	0.69
Velocity (fps)	4.26	3.24	3.05	4.99	2.26
Required Area (ft^2)	0.42	0.99	0.39	1.02	0.30
Flow Depth (ft.)	0.46	0.70	0.44	0.71	0.39
10 yr - 24 hr event (in.)	2.00	2.00	2.00	2.00	2.00
Peak Flow (cfs)	7.13	12.52	4.30	18.32	1.56
Velocity (fps)	6.02	4.55	4.22	** 5.99	2.78
Required Area (ft^2)	1.18	2.75	1.02	3.06	0.56
Flow Depth (ft.)	0.77	1.17	0.71	1.24	0.53
Construction					
Minimum Area (ft^2)	3.22	5.58	2.93	6.06	2.12
Minimum Depth (ft.)	1.27	1.67	1.21	1.74	1.03
*Erosion Protection	N	N	N	Y	N
Energy Dissipater Intervals	-	-	-	100' Max.	-

*** Based on 10 year - 24 hour flow.**

**** Based on installation of energy dissipaters.**

TABLE 13 (Continued)
DISTURBED DITCH DESIGN SUMMARY

Ditch Structure	DD-5	DD-6	DD-8	DD-8A	DD-9
10 yr - 6 hr event (in.)	1.30	1.30	1.30	1.30	1.30
Peak Flow (cfs)	1.26	6.62	0.68	7.30	1.26
Velocity (fps)	2.11	10.06	3.74	6.17	3.52
Required Area (ft^2)	0.60	0.66	0.18	1.18	0.36
Flow Depth (ft.)	0.55	0.57	0.30	0.77	0.42
10 yr - 24 hr event (in.)	2.00	2.00	2.00	2.00	2.00
Peak Flow (cfs)	2.81	21.74	1.69	23.43	2.86
Velocity (fps)	2.57	8.06	4.70	8.25	4.32
Required Area (ft^2)	1.09	2.70	0.36	2.84	0.66
Flow Depth (ft.)	0.74	1.16	0.42	1.19	0.58
Construction					
Minimum Area (ft^2)	3.08	5.51	1.69	5.71	2.33
Minimum Depth (ft.)	1.24	1.66	0.92	1.69	1.08
*Lining/Bedrock Y/N	N	**Y	N	Y	N
Rip-Rap D_{50}	-	-	-	7"	-

* Based on 10 year - 24 hour flow.

** On Bedrock.

TABLE 13 (Continued)

DISTURBED DITCH DESIGN SUMMARY

Ditch Structure	DD-10	DD-11	DD-12	DD-13
10 yr - 6 hr event (in.)	1.30	1.30	1.30	1.30
Peak Flow (cfs)	2.58	7.58	4.11	0.28
Velocity (fps)	2.74	3.30	4.07	1.48
Required Area (ft^2)	0.94	2.30	1.01	0.19
Flow Depth (ft.)	0.69	1.07	0.71	0.31
10 yr - 24 hr event (in.)	2.00	2.00	2.00	2.00
Peak Flow (cfs)	7.44	24.05	13.51	0.61
Velocity (fps)	3.57	4.40	5.47	1.80
Required Area (ft^2)	2.08	5.46	2.47	0.34
Flow Depth (ft.)	1.02	1.65	1.11	0.41
Construction				
Minimum Area (ft^2)	4.62	9.25	5.18	1.66
Minimum Depth (ft.)	1.52	2.15	1.61	0.91
*Lining/Bedrock Y/N	N	N	N	N

*** Based on 10 year - 24 hour flow.**

TABLE 14
DISTURBED CULVERT DATA

Culvert ID	Length	Slope %	Manning's No.
DC-2	45	2.0%	0.020
DC-4A	170	6.0%	0.020
DC-5	25	2.0%	0.020
DC-6	80	2.0%	0.020
DC-7	50	2.0%	0.020
DC-8	50	10.0%	0.020
DC-8A	150	16.0%	0.020
DC-9	120	25.0%	0.020
DC-10	85	25.0%	0.020
DC-10A	60	20.0%	0.020
DC-11	60	5.0%	0.020
DC-12	75	10.0%	0.020
DC-13	65	5.0%	0.020
~~DC-16~~	~~95~~	~~25.0%~~	~~0.020~~

TABLE 15

DISTURBED CULVERT DESIGN SUMMARY

Culvert	10 yr - 6 hr Event 1.30"			10 yr - 24 hr Event 2.00"			Recommended Construction Diameter (ft.)	Flow Capacity (cfs)	Rip-Rap Req'd Y/N	Rip-Rap D_{50}
	Peak Flow Cfs	Velocity fps	Min. Diam. Req'd ft.	Peak Flow Cfs	Velocity fps	Min. Diam. Req'd ft.				
DC-2	4.40	4.49	1.12	16.82	6.28	1.85	2.0	20.80	N	-
DC-4A	0.69	4.27	0.45	1.56	5.23	0.62	1.5	16.72	N	-
DC-5	0.57	2.69	0.52	1.25	3.28	0.70	1.5	9.66	N	-
DC-6	1.26	3.28	0.70	2.81	4.01	0.94	1.5	9.66	N	-
DC-7	7.30	5.10	1.35	23.43	6.82	2.09	2.0	20.80	Y	0.50
DC-8	0.62	5.03	0.40	1.37	6.13	0.53	1.5	21.59	Y	0.50
DC-8A	7.30	11.11	0.91	23.43	14.87	1.42	1.5	27.31	Y	1.20
DC-9	1.26	8.47	0.44	2.86	10.39	0.59	1.5	34.14	Y	0.75
DC-10	2.58	10.13	0.57	7.44	13.20	0.85	1.5	34.14	Y	1.00
DC-10A	2.58	9.32	0.59	7.44	12.14	0.88	1.5	30.53	Y	1.00
DC-11	7.58	7.25	1.15	24.05	9.68	1.78	2.0	32.88	Y	0.50
DC-12	4.11	8.07	0.81	13.51	10.87	1.26	1.5	21.59	Y	0.75
DC-13	7.86	7.32	1.17	24.66	9.74	1.80	2.0	32.88	Y	0.50
~~DC-16~~	~~0.36~~	~~6.19~~	~~0.27~~	~~1.16~~	~~8.29~~	~~0.42~~	~~1.5~~	~~34.14~~	~~Y~~	~~0.50~~

FIGURES

Figure 1 **Culvert Nomograph**

Figure 2 **Rip-Rap Chart**

Figure 3 **Undisturbed and Disturbed Ditch, Typical Section (Unlined Ditch)**

Figure 4 **Undisturbed and Disturbed Ditch, Typical Section (Lined Ditch)**

Figure 5 **Undisturbed Culvert Inlet, Typical Section**

Figure 6 **Main Bypass Culvert Outlet**

~~**Figure 7** **Office Pad Berm & Oil/Grease Separator**~~

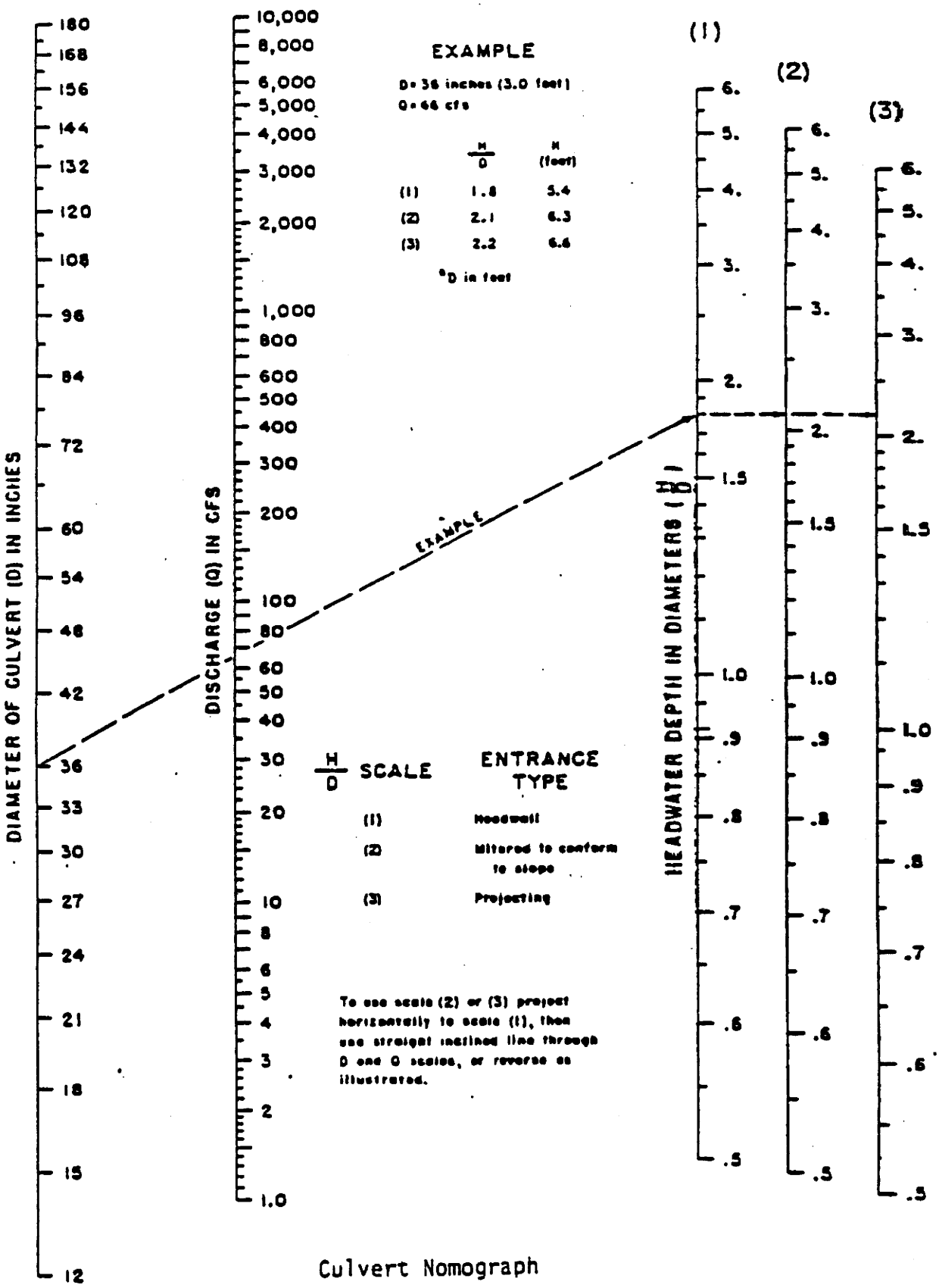

Culvert Nomograph

Headwater depth for corrugated-metal pipe culverts with entrance control. (U.S. Bureau of Public Roads.) 238-D-2909.

Figure 1

RIP-RAP CHART

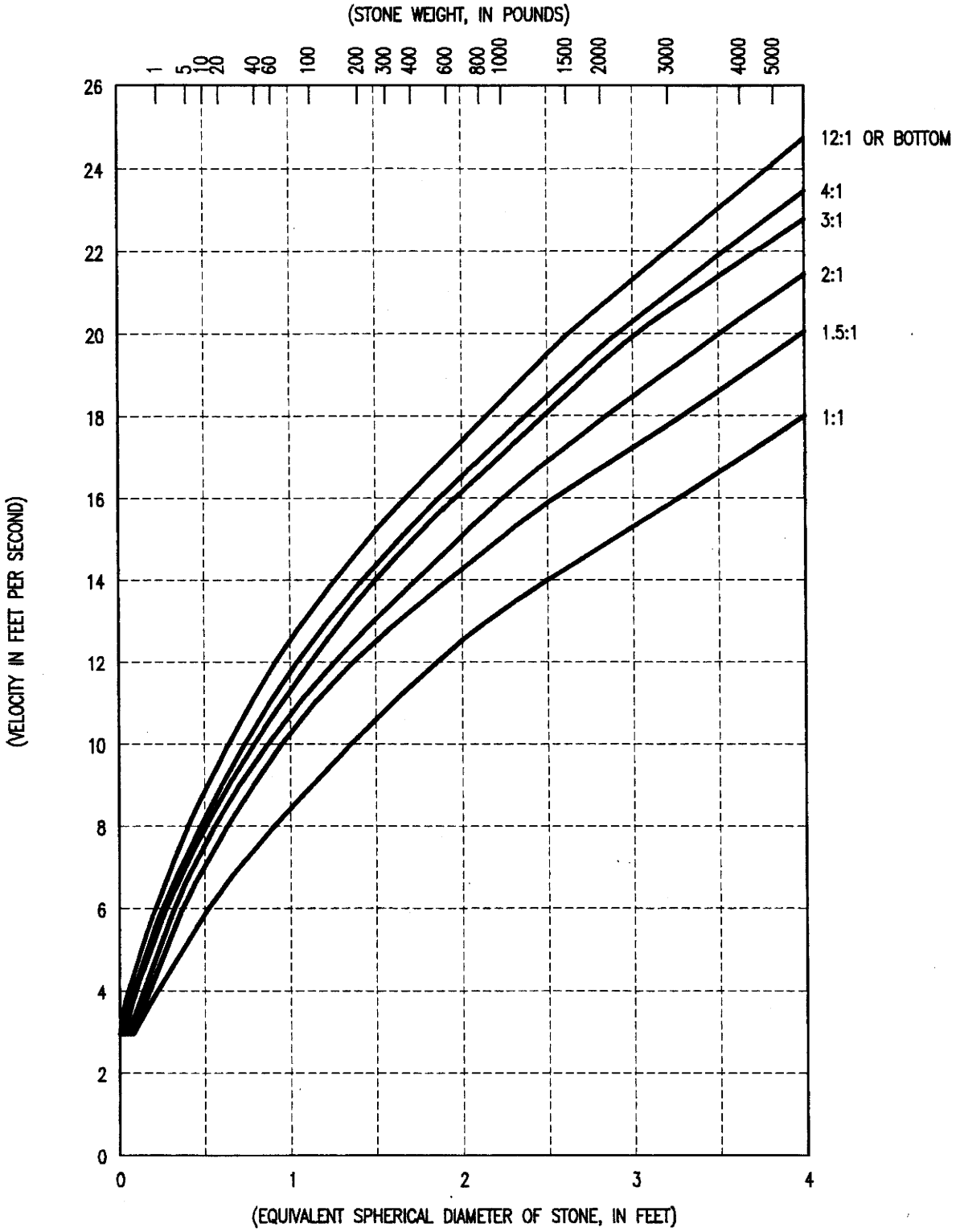

SIZE OF STONE THAT WILL RESIST DISPLACEMENT FOR VARIOUS VELOCITIES AND SIDE SLOPES

NOTE:

ADAPTED FROM REPORT OF SUBCOMMITTE ON SLOPE PROTECTION, AM. SOC. CIVIL ENGINEERS PROC. JUNE 1948.
FOR STONE WEIGHING 165 LBS. PER CUBIC FEET.

Figure 2

UNDISTURBED AND DISTURBED DITCH TYPICAL SECTION

(UNLINED DITCH)

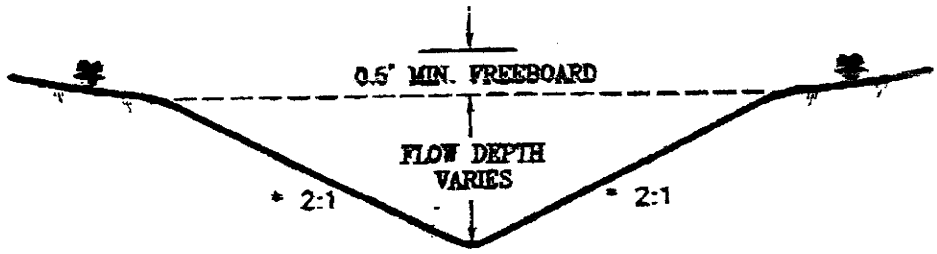

UNLINED DITCH		
DITCH	FLOW DEPTH	FLOW AREA (FT.²)
UD-Z	0.42	0.35
UD-15	0.59	0.71
DD-1	0.77	1.18
DD-2	1.17	2.75
DD-3	0.71	1.02
DD-4A	0.53	0.56
DD-5	0.74	1.09
DD-8	0.42	0.36
DD-9	0.58	0.66
DD-10	1.02	2.08
DD-11	1.65	5.46
DD-12	1.11	2.47
DD-13	0.41	0.34

INCORPORATED
MAY 14 2002
DIV OF OIL GAS & MINING

Note: Flows based on a 10 year – 24 hour event.

* Used for calculation only. Side slopes may vary; however, minimum flow area will be maintained.

UTAH REGISTERED PROFESSIONAL ENGINEER #154168 DAN W. GUY 5/8/02

FIGURE 3

UNDISTURBED AND DISTURBED DITCH
TYPICAL SECTION

(LINED DITCH)

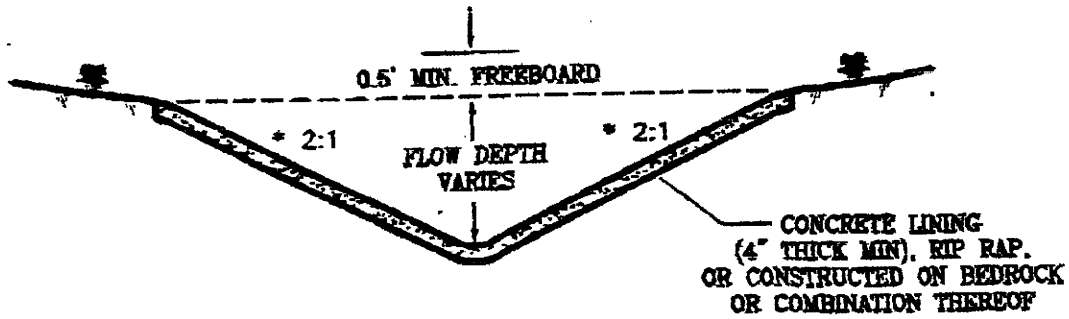

LINED DITCH		
DITCH	FLOW DEPTH	FLOW AREA ($FT.^2$)
DD-6	1.16	2.70
DD-8A	1.19	2.84

DIV OF OIL GAS & MINING

Note: Flows based on a 10 year - 24 hour event.

* Used for calculation only. Side slopes may vary; however, minimum flow area will be maintained.

UTAH REGISTERED PROFESSIONAL ENGINEER #154168 DAN W. GUY 5/8/02

FIGURE 4

INCORPORATED
MAY 14 2002
DIV OF OIL GAS & MINING

DISTURBED DITCH TYPICAL SECTION

(DITCH PROTECTED BY ENERGY DISSIPATERS)

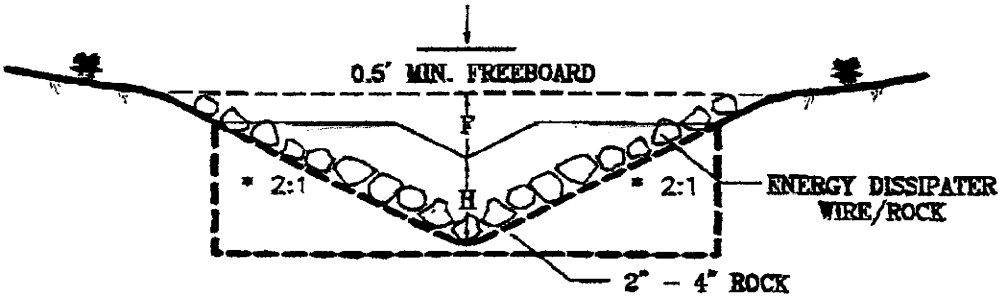

H = HEIGHT OF DISSIPATERS FROM DITCH BOTTOM.
F = FLOW DEPTH.

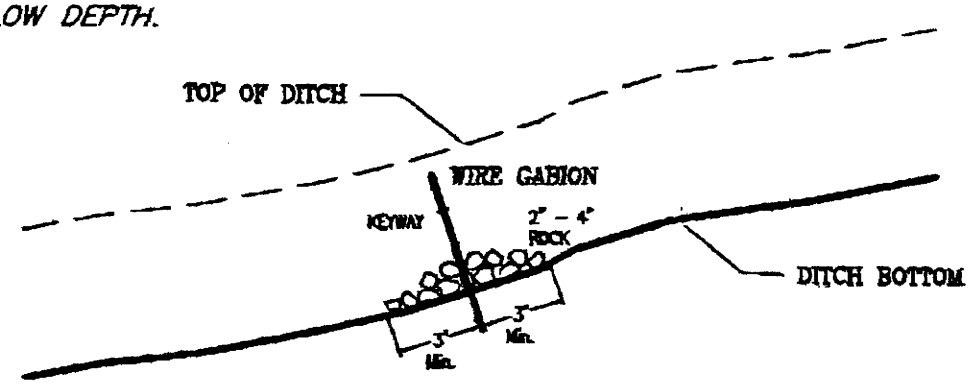

SIDE VIEW

PROTECTED DITCH				
DITCH	FLOW DEPTH	FLOW AREA (FT.^{2})	H	INTERVAL
DD-4	1.24	3.06	0.5'	100' Max.

* Used for calculation only. Side slopes may vary; however, minimum flow area will be maintained.

UTAH REGISTERED
#154168
DAN W. GUY
5/8/02
PROFESSIONAL ENGINEER

FIGURE 4A

UNDISTURBED CULVERT INLET
TYPICAL SECTION

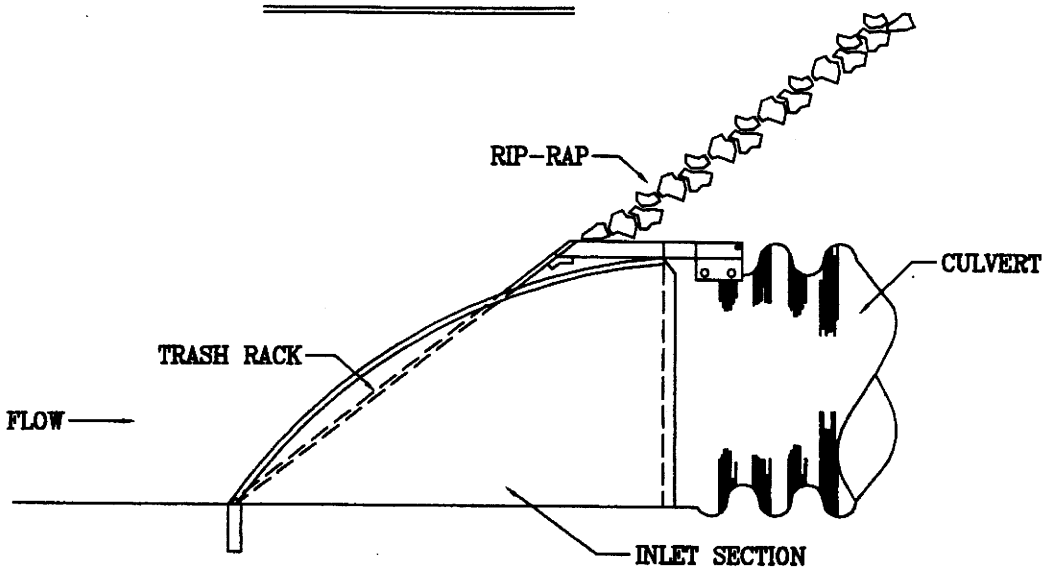

SIDE VIEW

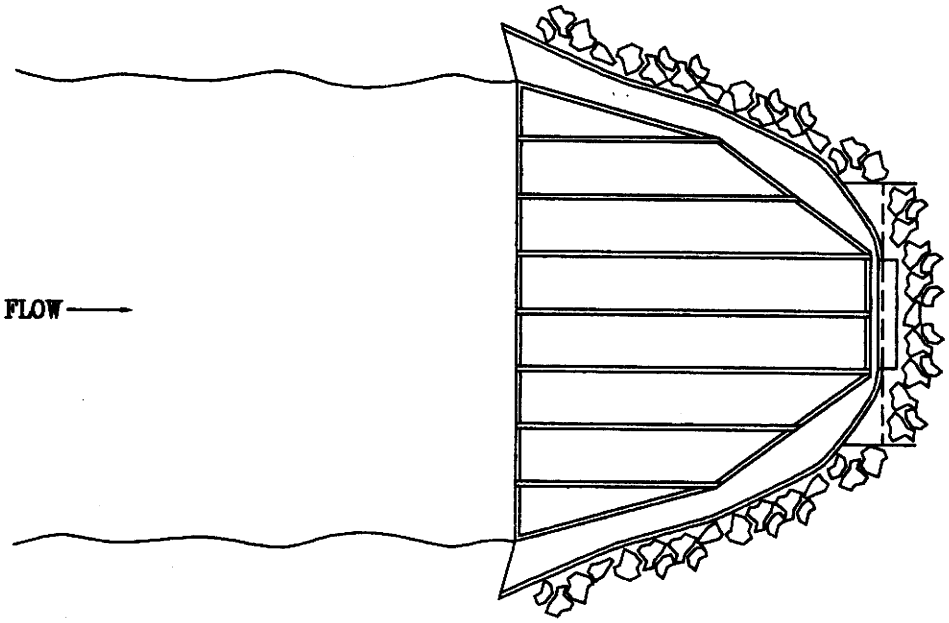

PLAN VIEW

Figure 5

MAIN CANYON CULVERT OUTLET

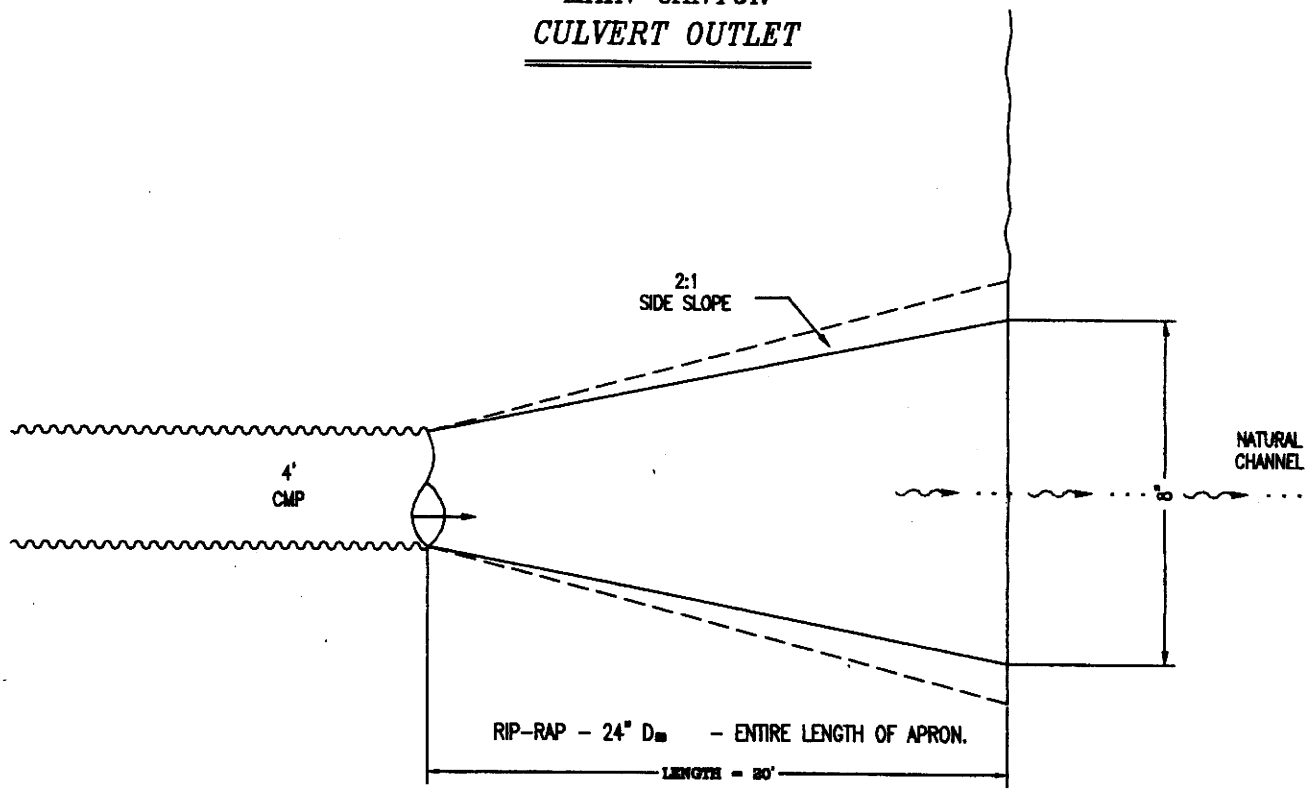

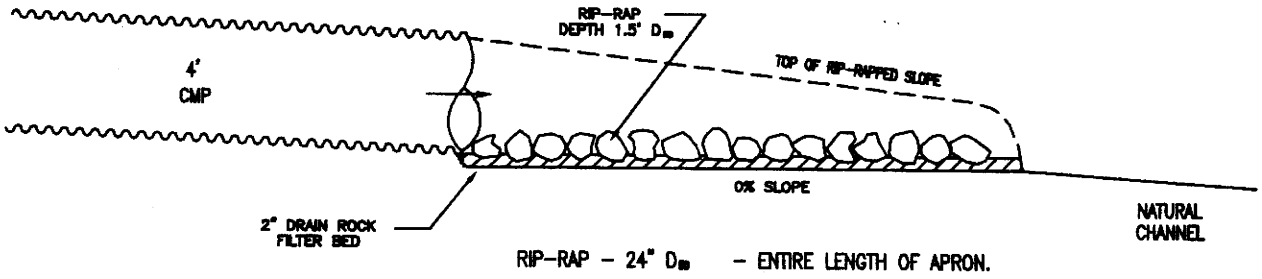

* DESIGN BASED ON FIGURE 7-26, DESIGN OF OUTLET PROTECTION - MAXIMUM TAILWATER CONDITION, "APPLIED HYDROLOGY AND SEDIMENTOLOGY FOR DISTURBED AREAS", BARFIELD, WARNER & HAAN, 1983.

Figure 6

DESIGN OF SEDIMENT CONTROL STRUCTURES

3.1 Design and Construction Specifications for Sedimentation Pond

3.2 Sediment Yield

3.3 Sediment Pond Volume

Table 16 Sediment Pond Design

Table 17 Sediment Pond Stage-Volume Data

Table 17A Sediment Pond Stage-Discharge Data (Open Channel Spillway)

Table 18 Sediment Pond Stage-Discharge Data (Principal Spillway)

Table 19 Sediment Pond Stage-Discharge Data (Emergency Spillway)

3.4 Sediment Pond Summary

Figures

Figure 8 Sediment Pond Stage - Volume Curve

Figure 9 Stage Discharge Curve - Intercell Spillway

Figure 10 Sediment Pond Principal Spillway Stage - Discharge Curve

Figure 11 Sediment Pond Emergency Spillway Stage - Discharge Curve

3.1 Design and Construction Specifications for Sedimentation Pond

a) All construction of sedimentation ponds will be performed under the direction of a qualified, registered professional engineer.

b) The upper cell (cell A) of the sediment pond will be constructed with an open channel spillway with a minimum depth of 1.5' below the top of the dam. The lower cell (cell B) will be constructed with a combination of 2 spillways. The principal spillway will be a 36" C.M.P. culvert riser and oil skimmer. This spillway will overflow at an elevation at least 3' below the top of the dam. This spillway will discharge directly into the bypass culvert (UC-OO) which is located beneath the pond. In the unlikely event of failure of the principal spillway, the lower pond cell will also be equipped with a second (emergency) culvert spillway, consisting of a 36" C.M.P. culvert riser and oil skimmer, with a minimum depth of 2.0' below the top of the dam. This spillway will also flow directly into the undisturbed bypass culvert (UC-OO). The open-channel spillway will be constructed of grouted rip-rap or concrete, and will have a minimum 5' bottom width with 2h :1v side slopes.

c) The area of pond construction shall be examined for topsoil, and where present in removable quantities, such soil shall be removed separately and stored in an approved topsoil storage location.

d) In areas where fill is to be placed for the pond impoundment structures, natural ground shall be removed for at least 12" below the base of the structure.

e) Native materials shall be used where practical. Fill will be placed in lifts not to exceed 15" and compacted prior to placement of next left. Compaction of all fill materials shall be at least 95%.

f) Rip-rap or other protection (culverts, concrete, etc.) will be placed at all inlets and outlets to prevent scouring. Rip-rap will consist of substantial (non-slaking) rock material of adequate size.

g) **Decanting of the ponds, as required, will be accomplished by use of a portable pump with an inverted inlet, and a pumping capacity of 100 gpm or greater. Samples will be collected prior to decanting of the pond. If the quality of the water meets the requirements of the U.P.D.E.S. Permit, decanting will proceed. Discharge samples will be collected as per the approved U.P.D.E.S. Discharge Permit.**

h) **Slopes of the embankments shall not be steeper than 2h : 1v, inside or outside, with a total of the inslope and outslope not less than 5h : 1v, except where areas of the pond are incised.**

i) **Tops and external slopes of the impoundments will be planted with an approved seed mix to help prevent erosion and promote stability.**

j) **Top width of the embankments shall be not less than (H+35)/5, where H = Height of Dam in feet.**

3.2 Sediment Yield

The Universal Soil Loss Equation (USLE) was used to estimate sediment yield from disturbed areas. All soil loss from this area was assumed to be delivered to, and deposited in the sedimentation pond.

Erosion rate (A) in tons-per-acre-per-year is determined using the USLE as follows:

$$A = (R)\ (K)\ (LS)\ (CP)$$

where the variables R, K, LS, and CP are defined as follows:

Variable "R" is the rainfall factor which can be estimated from $R = 27P^{2.2}$; where P is the 2-year, 6-hour precipitation value. P for the West Ridge area is 0.82" as shown in Section 2.1. Therefore, the estimated value of "R" for this area is 17.45.

Variable "K" is the soil erodibility factor. For disturbed areas, the "K" value is conservatively estimated to be 0.5. "K" is estimated to be 0.035 for undisturbed areas.

Variable "LS" is the length-slope factor. This figure was determined by applying the slope length and percentage for each sub-drainage area to the chart in Figure 5.15, p. 334, "Applied Hydrology and Sedimentology for Disturbed Areas", Barfield, Warner and Haan, 1983.

Variable "CP" is the control practice factor, which can be divided into a cover and a practice factor. For purposes of these calculations, the following "CP" values were used:

Site	CP Factor
Compacted Areas	1.20
Reseeded	0.38
Undisturbed Area	0.15

The sediment volume is based on a density of 100 pounds per cubic foot of sediment.

Sediment Yield Calculations - USLE

Drainage	R	K	Acres	Slope Length Feet	Slope (%)	LS	CP	A**	Yield***
Right Fork-Disturbed	17.45	0.5	12.97	150	15	3.10	1.20	32.46	0.193
Right Fork-Undisturbed	17.45	0.035	57.62	950	68	83.84	0.15	7.68	0.203
*Left Fork-Disturbed	17.45	0.5	~~5.78~~ 5.75	680	9.5	3.20	1.20	~~33.51~~ 33.50	0.089
*Left Fork-Undisturbed	17.45	0.035	~~9.87~~ 21.65	830	78	92.82	0.15	8.50	~~0.039~~ 0.081
Main Canyon-Disturbed	17.45	0.5	~~4.83~~ 4.86	100	9.7	1.25	1.2	13.09	0.029
Main Canyon-Undisturbed	17.45	0.035	~~16.89~~ 5.11	825	67.5	77.38	0.15	7.09	~~0.055~~ 0.013

	Cell A	Cell B	Total
Total Sediment 1 year (ac.ft.)	0.438	0.170	0.608
Total Sediment 3 years (ac.ft.)	1.314	0.510	1.824

* Drains to Cell B

** A = tons/acre-year

*** Yield = acre-ft/year

3.3 Sediment Pond Volume

The volumes shown in Table 16 are from the volumes calculated from the precipitation , runoff and sediment yield for a 10 year - 24 hour precipitation event. The volumes were calculated based on the disturbed areas (and contributing undisturbed areas) runoff values, developed using the design parameters described in this section.

TABLE 16
SEDIMENT POND DESIGN

1-	Use 2.00" for 10 year - 24 hour event.		
2-	Disturbed Area Draining to Pond = 23.58 acres.		
3-	Runoff Curve Number = CN = 90 (Disturbed)		
4-	Disturbed Area Runoff = (From Table 9, 10 yr./24 hr.)	=	2.160 ac.ft.
5-	Undisturbed Watershed = 84.38 Acres		
6-	Runoff Curve Number (See Table 3)		
7-	Undisturbed Area Runoff (From Table 4, 10 yr/24 hr)	=	2.790 ac.ft.
8-	Sediment Storage Volume USLE - 1.824	=	1.824 ac.ft.
9-	Direct Precipitation into Pond 1.66 acres x 2.00" / 12 in./ft.	=	0.277 ac.ft.
10-	Total Required Pond Volume 2.160 + 2.790 + 1.824+ 0.277	=	7.051 ac.ft.
11-	Pond Actual Volume at Principal Spillway	=	8.170 ac.ft.
12-	Peak Flow (25 year - 6 hour event)	=	23.73 cfs

Note: Refer to Appendix 1 for computer backup data.

TABLE 17
WEST RIDGE SEDIMENT POND
STAGE VOLUME DATA (AS-CONSTRUCTED)

Elevation	Area (ft^2)	Volume (ac. ft.)	Acc. Volume (ac. ft.)	Remarks
6936	796.2	0	0	Bottom Cell A
6938	5,448.7	0.143	0.143	
6940	8,307.5	0.316	0.459	
6942	10,755.2	0.438	0.897	
6942.8		0.213	1.110	60% Sediment Cleanout Level
6944	12,527.2	0.534	1.431	
6945.4		0.419	1.850	Maximum Sediment Level
6946	14,333.5	0.617	2.048	
6948	16,296.8	0.703	2.751	
6950	18,331.5	0.795	3.546	
6952	20,279.9	0.886	4.432	
6952.5	20,704.0	0.235	4.667	Spillway Cell A
6954.5	22,490.1	0.992	5.659*	Crest Cell A
6926	363.0	0.000	4.667	Bottom Cell B
6928	10,208.0	0.243	4.910	
6928.80	-	0.226	5.136	60% Sediment Cleanout Level
6930	13,282.9	~~0.539~~ 0.313	5.449	Maximum Sediment Level
6932	15,220.4	0.654	6.103	
6934	17,324.9	0.747	6.850	
6936	19,402.2	0.843	7.693	
6937	20,360.0	0.456	8.149	Principal Spillway
6938	21,407.8	0.479	8.628	Emergency Spillway
6940	23,731.5	1.036	(10.656)**	Crest Cell B

* Volume at Upper Dam Crest.

** Total Volume at Crest of Both Dams.

Note: 0.29 ac. ft. surplus with sediment at maximum.

TABLE 17A
SEDIMENT POND
INTERCELL OPEN-CHANNEL SPILLWAY
STAGE DISCHARGE DATA

STAGE (ft.)	DISCHARGE (cfs)
0.00	0.00
0.20	1.49
0.40	4.53
0.60	8.90
0.80	14.58
0.83	*15.55
1.00	21.61

Note: *25 year - 6 hour Peak Flow to Upper Cell = 15.20 cfs.
Flow will pass through spillway at a depth of 0.83'.

Calculations based on Broad Crested Weir Formula

$$Q = 3.087\ bH^{1.5};\ \text{Where } b = \text{Average Width} = \frac{5 + (5 + 4d)}{2}$$

TABLE 18
SEDIMENT POND
PRINCIPAL SPILLWAY
STAGE - DISCHARGE DATA
36" C.M.P. RISER

Stage (ft.)	Discharge (cfs)		
	Weir Flow	Orifice Flow	Pipe Flow
0.00	0.00	0.00	44.81
0.20	2.53	15.17	46.80
0.40	7.15	21.45	48.71
0.52	10.60	24.45	49.82
0.60	13.13	26.27	50.55
0.80	20.22	30.33	52.33
0.89	*23.73	31.99	53.10
1.00	28.26	33.91	54.04
1.20	37.15	37.15	55.70
1.40	46.81	40.12	57.32
1.60	57.19	42.89	58.89
1.80	68.25	45.50	60.42
2.00	79.93	47.96	61.91
*25 year - 6 hour Peak Flow = 23.73 cfs; Flow is weir controlled at H = 0.89'.			

Weir Flow

$Q = CLH^{3/2}$; *Where* $C = 3.0$, $L = 9.42$

$Q = 28.26\ H^{3/2}$

Orifice **Flow**

$Q = C'a\sqrt{2gH}$; *Where* $C' = 0.6$, $a = 7.065$, $g = 32$

Q = *is* $33.91\sqrt{H}$

Pipe Flow

$$\frac{Q = a\ [\ 2g\ (H')^{1/2}}{(1+\ Ke+\ Kb+\ KcL)};\ \textit{Where}\ a = 7.065,\ g = 32,\ H' = H+\ 4\ -[(0.6)(2.0)] = H+\ 2.2,\ Ke = 1.0,\ Kb = 0.5,\ Kc = 0.05,\ L = 20'$$

$Q = 30.21\ (H + 2.2)^{1/2}$

TABLE 19
SEDIMENT POND
EMERGENCY SPILLWAY
STAGE - DISCHARGE DATA
36" C.M.P. RISER

Stage (ft.)	Discharge (cfs)		
	Weir Flow	Orifice Flow	Pipe Flow
0.00	0.00	0.00	44.81
0.20	2.53	15.17	46.80
0.40	7.15	21.45	48.71
0.52	10.60	24.45	49.82
0.60	13.13	26.27	50.55
0.80	20.22	30.33	52.33
0.89	*23.73	31.99	53.10
1.00	28.26	33.91	54.04
1.20	37.15	37.15	55.70
1.40	46.81	40.12	57.32
1.60	57.19	42.89	58.89
1.80	68.25	45.50	60.42
2.00	79.93	47.96	61.91
*25 year - 6 hour Peak Flow = 23.73 cfs; Flow is weir controlled at H = 0.89'.			

Weir Flow

$Q = CLH^{3/2}$; *Where* $C = 3.0$, $L = 9.42$

$Q = 28.26\ H^{3/2}$

Orifice Flow

$Q = C'a\sqrt{2gH}$; *Where* $C' = 0.6$, $a = 7.065$, $g = 32$

$Q = is\ 33.91\sqrt{H}$

Pipe Flow

$$Q = \frac{a\ [\ 2g\ (H')^{1/2}}{(1 + Ke + Kb + KcL)}$$; *Where* $a = 7.065$, $g = 32$, $H' = H + 4 - [(0.6)(2.0)] = H + 2.2$, $Ke = 1.0$, $Kb = 0.5$, $Kc = 0.05$, $L = 20'$

$Q = 30.21\ (H + 2.2)^{1/2}$

Note: Flow Data is based on no flow passing through Principal Spillway Riser.

3.4 Sediment Pond Summary

a) The Sediment pond has been designed to contain the disturbed area (and contributing undisturbed area) runoff from a 10 year - 24 hour precipitation event, along with 3 years of sediment storage capacity. Runoff to the pond will be directed by various ditches and culverts as described in the plan.

b) The required volume for the sediment pond is calculated at 7.051 acre feet, including 3 years of sediment storage. The sediment pond size is 2 cells with a total volume of approximately 8.170 acre feet at the Principal Spillway, which is more than adequate. If sediment is allowed to reach the maximum volume in both the upper and lower cells, as determined by the markers, the ponds will still have 0.29 ac. ft. surplus storage capacity above the 10 year - 24 hour design.

c) The pond will meet a theoretical detention time of 24 hours. It is equipped with a 36" cmp culvert riser and oil skimmer for a principal spillway and a 36" cmp culvert riser emergency spillway. Any discharge from the pond will be in accordance with the approved UPDES Permit.

d) The pond inlets are protected from erosion. The principal spillway, and/or emergency spillway will discharge directly to the undisturbed bypass culvert (UC-OO), and to the main canyon drainage.

e) The pond is temporary, and will be removed upon final reclamation of the property.

f) The pond has been constructed according to the design criteria listed under "Construction Specifications for Sedimentation Ponds".

g) The pond is equipped with an inter-cell open channel spillway constructed of grouted rip-rap or concrete. In addition, the lower cell (cell B) is equipped with a vertical 36" cmp culvert and oil skimmer as a principal spillway and a vertical 36" cmp culvert riser as an emergency spillway. Dimensions of the inter-cell spillway are a minimum depth of 2.0', 5' bottom width and 2h : 1v sideslopes. Calculations in Table 17A show the spillway will pass the

expected peak flow of 15.20 cfs from the upper cell at a depth of 0.83'.

h) **The principal spillway in the lower cell (B) is sized to carry runoff from a 25 year - 6 hour precipitation event, which is shown on Table 11 as 23.73 cfs. This overflow is a 36" cmp culvert fitted with an oil skimmer as shown on Map 7-4. The discharge will go into by-pass culvert UC-OO, which is located beneath the ponds. In the event of failure of this overflow, the lower cell is also equipped with an additional 36" cmp emergency spillway as noted in g) above.**

The 36" cmp principal spillway will carry the peak flow from a 25 year - 6 hour event at a depth of 0.89' over the pipe as shown on Table 18 and Figure 10. The emergency spillway is constructed 1' above the principal spillway elevation. This spillway is a minimum of 2.0' below the top of the dam, and will carry the entire flow of the 25 year - 6 hour event at a depth of 0.89', leaving more than a foot of freeboard to the top of the dam. See Table 19 and Figure 11 for Stage - Discharge details for the Emergency Spillway.

i) **The runoff from the lower spillway will travel into by-pass culvert UC-OO, which will then discharge to the main channel below the minesite.**

j) **The main canyon culvert is adequately sized to carry the flow of the undisturbed by-pass drainage plus the pond overflow. It discharges into the Main Canyon drainage approximately 390' downstream of the pond outlet.**

k) **The culvert outlet is equipped with an adequately sized rip-rap apron to slow the combined flow sufficiently to prevent erosion of the downstream channel.**

FIGURE 7
ASCA-X Containment

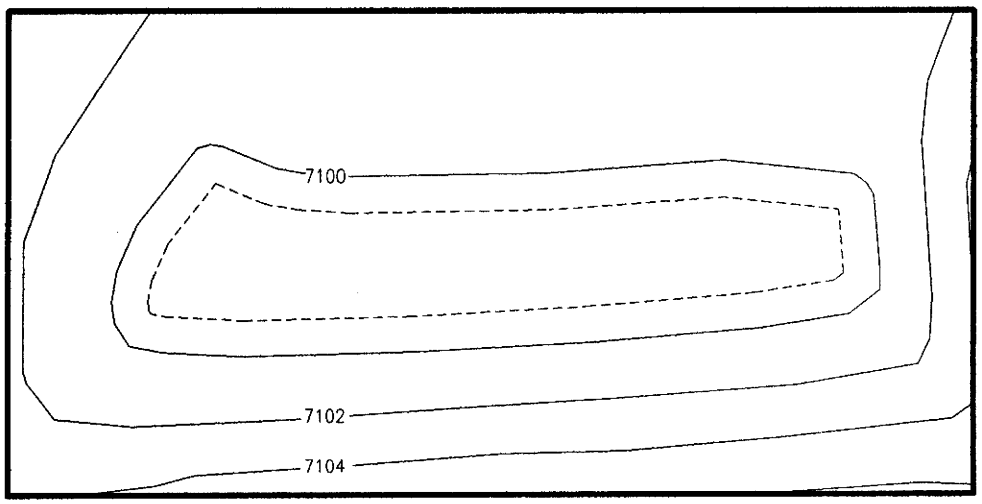

Plan View

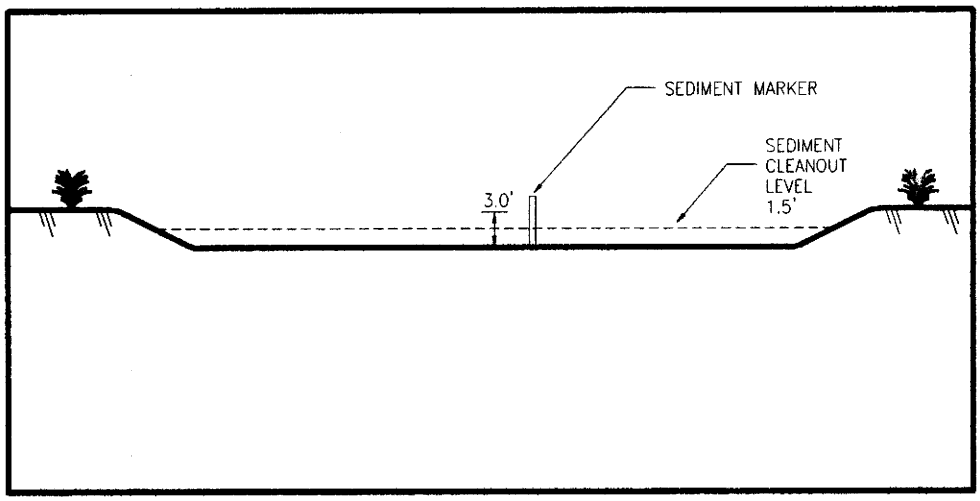

Section View

UTAH REGISTERED
#154168
DAN W. GUY
10/22/02
PROFESSIONAL ENGINEER

STAGE - VOLUME CURVE

SEDIMENT POND

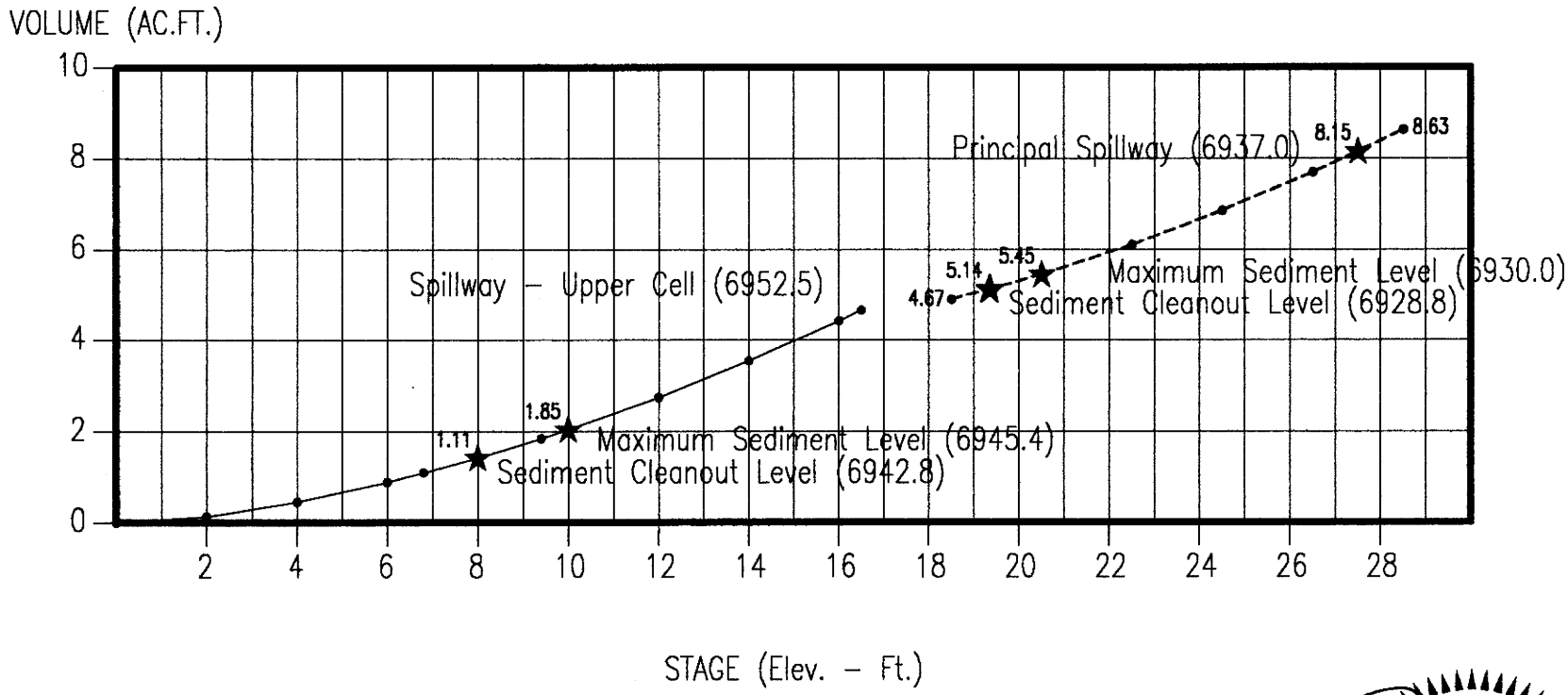

_____ Upper Cell (A)	_____ Lower Cell (B)

Figure 8

STAGE - DISCHARGE CURVE

INTERCELL OPEN-CHANNEL SPILLWAY

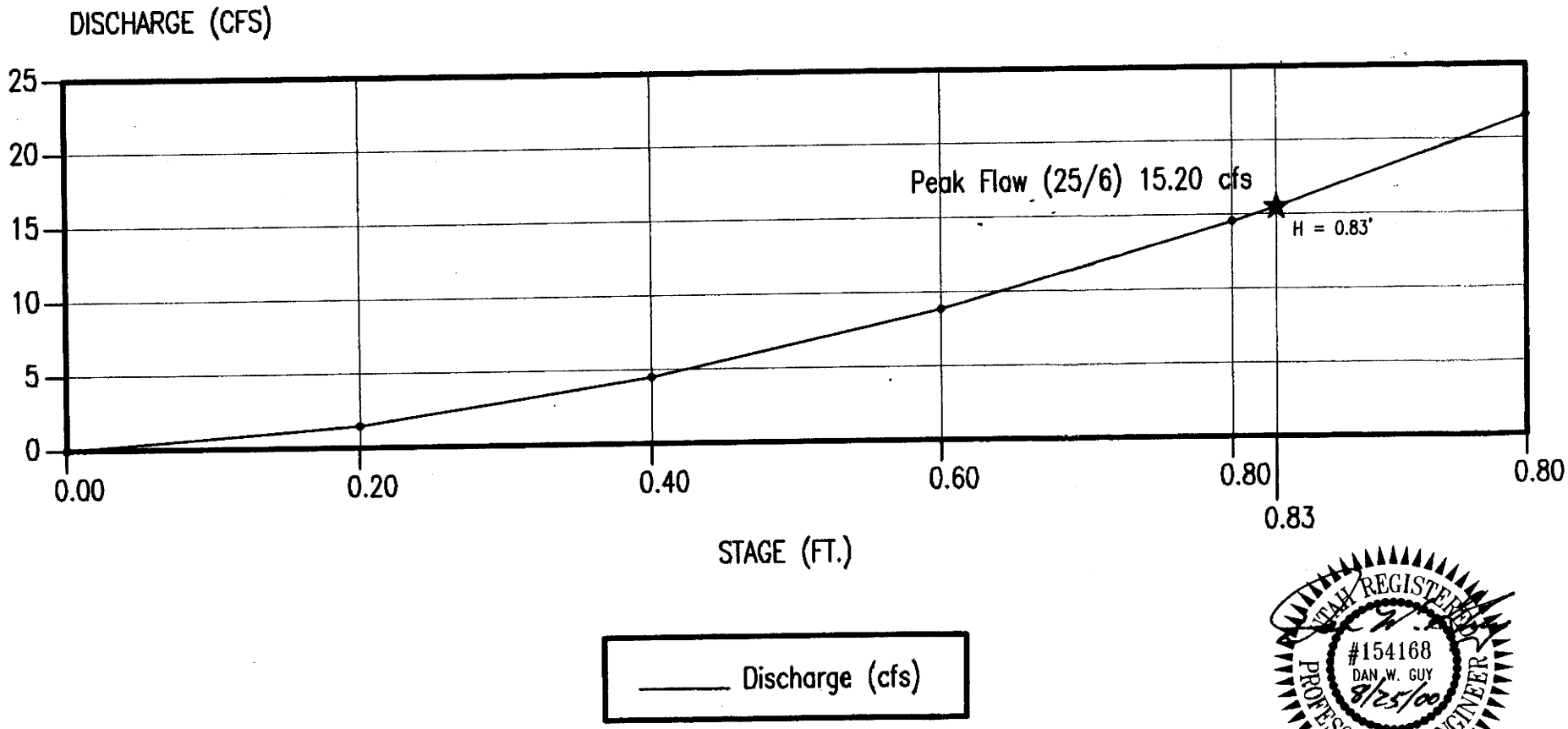

UTAH REGISTERED
#154168
DAN W. GUY
8/25/00
PROFESSIONAL ENGINEER

Figure 9

STAGE - DISCHARGE CURVE

SEDIMENT POND – PRINCIPAL SPILLWAY

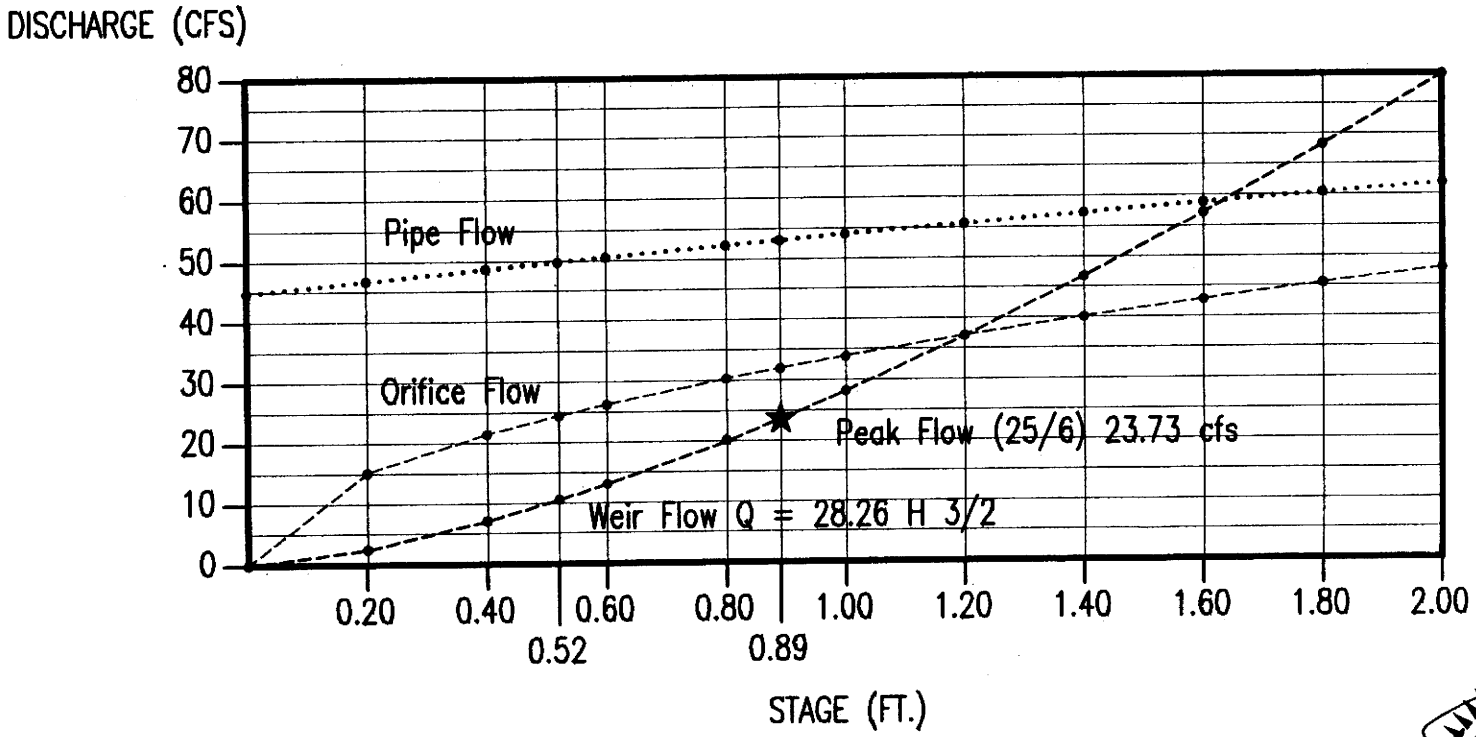

------ Weir Flow	——— Orifice Flow	..... Pipe Flow

Note: Weir Controlled at H = 0.89'.

UTAH REGISTERED PROFESSIONAL ENGINEER #154168 DAN W. GUY 8/25/00

Figure 10

STAGE - DISCHARGE CURVE

SEDIMENT POND – EMERGENCY SPILLWAY

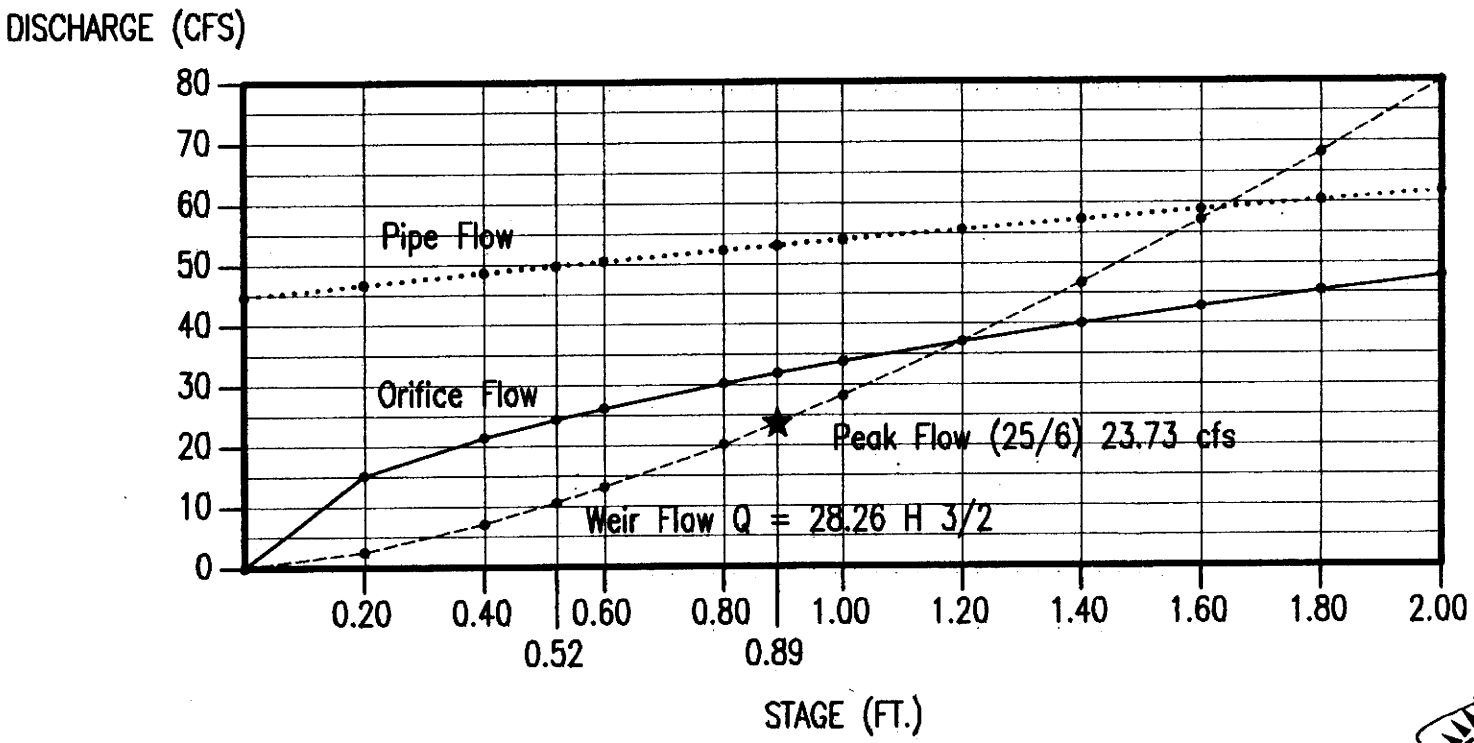

------ Weir Flow	——— Orifice Flow	..... Pipe Flow

Note: Weir Controlled at H = 0.89'.

UTAH REGISTERED #154168 DAN W. GUY 8/25/00 PROFESSIONAL ENGINEER

Figure 11

DESIGN OF DRAINAGE CONTROL STRUCTURES FOR RECLAMATION HYDROLOGY

Reclamation Hydrology

4.1 General
4.2 Reclaimed Area Drainage Control
4.3 Restored Channels
4.4 Sediment Pond

Table 20 Final Reclamation - Drainage Areas Contributing to Channels
21 Final Reclamation - Drainage Structure Flow Summary
22 Final Reclamation - Restored Channel Design Parameters
23 Final Reclamation - Restored Channel Flow Calculations

Figure 12 Restored Channel Typical Sections

Reclamation Hydrology

4.1 General

Prior to construction of the mine site and facilities, it is proposed to only slightly alter the existing side and main canyon channels to allow for culvert installation. The main channel bottom will be graded to a bottom width of approximately 12' with approximate 2h : 1v side slopes. The side channel bottoms will be graded to a width of approximately 4' with approximate 2h : 1v side slopes. In areas of existing topsoil, the channel areas will be covered with a layer of filter fabric extending a minimum of 10' each side of the channel banks. Bypass culverts will then be installed and necessary earthwork will be done to construct the mine site. Upon final reclamation, all hydrologic controls, including the sediment pond, will be removed. During regrading operations, the backfill over the channels will be removed down to the filter fabric. The fabric will also then be removed, exposing the nearly natural, pre-existing channels. Construction and reclamation in this manner will allow for a more complete and natural restoration of channels. Since the existing channels are stable and naturally rip-rapped and sized, no additional rip-rap or channel sizing is proposed. As the culvert is removed, silt fence will be installed along the channel banks in those areas where topsoil was replaced or areas that have in-place topsoil resources. Refer to Map 5-9 for the location of the silt fences.

Reclaimed channels are noted with an RC-Letter (i.e. RC-BB). Channels are shown on Map 5-9, "Minesite Reclamation".

A typical channel cross-section for each side and main channel is shown on Figure 12. Calculated flows for the applicable storm event were then routed through the channels to determine if reclaimed channel sizes were adequate for the design flows. (See Table 20). In all cases, the channels were adequately sized to safely carry the contributing area runoff.

4.2 Reclaimed Area Drainage Control

During final reclamation, all previously installed drainage controls, including the sediment ponds, will be removed. The reclaimed area will be roughened by discontinuous tilling and/or "gouging" the area with a trackhoe bucket. The roughening will create furrows or depressions at approximately 18" deep throughout the reclaimed area. In addition, straw or wood mulch will be used in final seeding of the area. Roughening will continue to the existing channel banks, and the entire reclaimed area, including channels, will be reseeded according to the approved plan.

Prior to removal of the sediment ponds, a series of 4 silt fences will be installed across the main drainage channel below the pond area, as shown on Map 5-9. These silt fences will remain as final treatment for runoff from the reclaimed site until Phase II Bond Release requirements are met. These are, however, only secondary sediment controls. The primary sediment control from the reclaimed site will be extensive roughening/gouging, use of mulch and revegetation.

Calculations have been run to estimate the total sediment production from the reclaimed site, and to evaluate the effectiveness of the treatments.

The Universal Soil Loss Equation (USLE) was used to estimate sediment yield from disturbed areas. All soil loss from this area was assumed to be delivered to, and deposited in the main channel.

Erosion rate (A) in tons-per-acre-per-year is determined using the USLE as follows:

$$A = (R)\ (K)\ (LS)\ (CP)$$

where the variables R, K, LS, and CP are defined as follows:

Variable "R" is the rainfall factor which can be estimated from $R = 27P^{2.2}$; where P is the 2-year, 6-hour precipitation value. P for the West Ridge area is 0.82" as shown in Section 2.1. Therefore, the estimated value of "R" for this area is <u>17.45</u>.

Variable "K" is the soil erodibility factor. For disturbed areas, the "K" value is conservatively estimated to be 0.25. "K" is estimated to be 0.035 for undisturbed areas.

Variable "LS" is the length-slope factor. This figure was determined by applying the slope length and percentage for each sub-drainage area to the chart in Figure 5.15, p. 334, "Applied Hydrology and Sedimentology for Disturbed Areas", Barfield, Warner and Haan, 1983.

Variable"CP" is the control practice factor, which can be divided into a cover and a practice factor. For purposes fo these calculation, the following "CP" values were used:

Cover Factor - "C"

Reclaimed Area - Wood Fiber Mulch	**- * 0.01**
Undisturbed Area - Section 3.2	**- 0.15**
Disturbed Area - Section 3.2	**- 1.20**

Control Practice Factor - "P"

Assumed equal to 1.0, since the land is not used for crops.

The table on the following page is a summary comparing expected sediment contributions from the proposed disturbed area only, under all three phases of conditions - Undisturbed, Disturbed and Reclaimed.

Note: While this set of calculations assume all sediment production is delivered to the main channel, this is probably not the case. The deep surface gouging on both sides of the channel during reclamation will likely trap most, if not all, of the transported sediment prior to reaching the channel.

The sediment volume is based on a density of 100 pounds per cubic foot of sediment.

***Barfield, et.al., 1983, Appendix 5A.**

Undisturbed/Disturbed/Reclaimed
Sediment Yield Calculations - USLE
(Proposed Disturbed Area Only)

Drainage	R	K	Acres	Slope Length Feet	Slope (%)	LS	CP	A*	Yield**
Right Fork-Undisturbed	17.45	0.035	12.97	150	15	3.10	0.15	0.284	0.0017
Right Fork-Disturbed	17.45	0.5	12.97	150	15	3.10	1.20	32.46	0.1933
Right Fork-Reclaimed	17.45	0.25	12.97	150	15	3.10	0.01	0.1352	0.0009
Left Fork-Undisturbed	17.45	0.035	5.78	680	9.5	3.20	0.15	0.293	0.0008
Left Fork-Disturbed	17.45	0.5	5.78	680	9.5	3.20	1.20	33.51	0.0889
Left Fork-Reclaimed	17.45	0.25	5.78	680	9.5	3.20	0.01	0.1396	0.0004
Main Canyon-Undisturbed	17.45	0.035	4.83	100	9.7	1.25	0.15	0.115	0.0002
Main Canyon-Disturbed	17.45	0.5	4.83	100	9.7	1.25	1.20	13.09	0.0290
Main Canyon-Reclaimed	17.45	0.25	4.83	100	9.7	1.25	0.01	0.0545	0.0001

Total Sediment (Undisturbed State) 0.0027
Total Sediment (Disturbed State) 0.3112
Total Sediment (Reclaimed State) 0.0014

* A = tons/acre-year
** Yield = acre-ft/year

Summary

The above table indicates the sediment contribution from the reclaimed areas of the minesite will be approximately 0.0014 acre feet per year, as compared to 0.3112 acre feet per year for the disturbed area. When the reclaimed areas are calculated as undisturbed, the total minesite sediment contribution increases slightly to 0.0027 acre feet per year, verses the 0.0014 noted in the table above.

This indicates the proposed reclamation process will actually reduce the expected sediment contribution over natural, undisturbed conditions. This is primarily due to the extensive roughening and use of wood fiber mulch to reduce runoff.

4.3 Restored Channels

As mentioned in Section 4.1, existing channels will only be slightly altered prior to construction. The restored main channels will have a bottom width of approximately 12' with 2h : 1v side slopes, and the side channels are proposed to have a bottom width of approximately 4' with 2h : 1v side slopes. The overall channel slopes are not proposed to be altered during construction or reclamation. Since the existing channel bottoms are proposed to be only slightly regraded and widened, existing, natural rip-rap will be left in place; therefore, no additional rip-rapping is proposed for reclamation.

The restored channel sizes were for checked adequacy to carry runoff from a 100 year - 6 hour storm event. As shown on Table 23, all channels are adequately sized to carry the projected runoff with at least 1' of freeboard. See Figure 12 for a typical section of the reclaimed channels and summary of flow depths and velocities.

4.4 Sediment Pond

As discussed in Section 4.1, the sediment pond will be removed during final reclamation. Prior to removal of the pond, a series of 4 silt fences will be placed across the main canyon channel below the pond. Sediment control for the reclamation will be accomplished by extensive roughening/gouging and revegetation of the reclaimed area and installation of sediment traps in the restored channels. The silt fences will act as secondary, final sediment controls. These fences will be maintained until Phase II Bond Release. See Map 5-9 "Minesite Reclamation" for location and reclamation details.

TABLE 20
FINAL RECLAMATION
DRAINAGE AREAS CONTRIBUTING TO CHANNELS

RC-DD (Side Channel)	UA-DD
RC-FF (Side Channel)	UA-FF
RC-GG	RC-DD, RC-FF, UA-AA, UA-1a,UA-1b, UA-2a, UA-2b, UA-3, UA-4, UA-5, UA-7, UA-9 DA-1, DA-2, DA-3, DA-4, DA-4A, DA-5, DA-6, DA-7, DA-9, DA-X
RC-JJ (Side Channel)	UA-JJ
RC-KK	UA-HH, UA-10a, UA-10b, UA-10c, UA-8, RC-JJ DA-Y, DA-8, DA-10
RC-MM (Side Channel)	UA-MM
RC-PP (Side Channel)	UA-PP
RC-QQ	RC-GG, RC-KK, RC-MM, RC-PP, UA-12, UA-14, UA-16 DA-11, DA-12, DA-13, DA-14, DA-Z

Refer to Map 7-2 for drainage areas and Map 5-9 for reclamation channels.

TABLE 21
FINAL RECLAMATION
DRAINAGE STRUCTURE FLOW SUMMARY

Channel	10/6 cfs	100/6 cfs
RC-DD	0.15	0.92
RC-FF	0.16	0.95
RC-GG	21.08	69.98
RC-JJ	0.50	2.16
RC-KK	11.13	35.65
RC-MM	0.07	0.52
RC-PP	0.11	0.69
RC-QQ	35.88	116.35

Flows from Table 4, and Table 9.

TABLE 22
FINAL RECLAMATION
RESTORED CHANNEL DESIGN PARAMETERS

Channel	Bottom Width (ft.)	Side Slope H:V	Slope %	Reclaimed Depth (ft.)	Manning's No.
RC-DD	4	2:1	24.5	1.5	0.035
RC-FF	4	2:1	24.4	1.5	0.035
RC-GG	12	2:1	6.4	3.5	0.035
RC-JJ	4	2:1	24.6	1.5	0.035
RC-KK	12	2:1	10.0	3.0	0.035
RC-MM	4	2:1	40.7	1.5	0.035
RC-PP	4	2:1	40.5	1.5	0.035
RC-QQ	12	2:1	6.3	4.0	0.035

TABLE 23
FINAL RECLAMATION
RESTORED CHANNEL FLOW CALCULATIONS

Channel	RC-DD	RC-FF	RC-GG
10 yr - 6 hr event (in.)	1.30	1.30	1.30
Peak Flow (cfs)	0.15	0.16	21.08
Velocity (fps)	1.66	1.70	4.98
Req'd Area (ft.^{2})	0.09	0.09	4.24
Flow Depth (ft.)	0.02	0.02	0.33
100 yr - 6 hr event (in.)	2.00	2.00	2.00
Peak Flow (cfs)	0.92	0.95	69.98
Velocity (fps)	3.36	3.40	7.70
Req'd Area (ft.^{2})	0.27	0.28	9.09
Flow Depth (ft.)	0.07	0.07	0.68

TABLE 23 (Continued)

FINAL RECLAMATION
RESTORED CHANNEL FLOW CALCULATIONS

Channel	RC-JJ	RC-KK	RC-MM	RC-PP	RC-QQ
10 yr - 6 hr event (in.)	1.30	1.30	1.30	1.30	1.30
Peak Flow (cfs)	0.50	11.13	0.07	0.11	40.45
Velocity (fps)	2.66	4.49	1.43	1.71	6.29
Req'd Area ($ft.^2$)	0.19	2.48	0.05	0.06	6.43
Flow Depth (ft.)	0.05	0.20	0.01	0.02	0.49
100 yr - 6 hr event (in.)	2.00	2.00	2.00	2.00	2.00
Peak Flow (cfs)	2.16	35.65	0.52	0.69	116.35
Velocity (fps)	4.65	6.96	3.15	3.51	9.13
Req'd Area ($ft.^2$)	0.46	5.12	0.17	0.20	12.74
Flow Depth (ft.)	0.11	0.40	0.04	0.05	0.92

RESTORED CHANNEL
TYPICAL SECTIONS

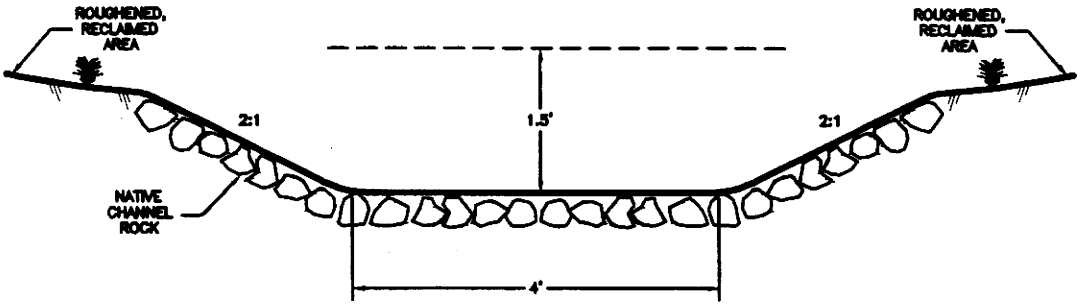

SIDE CHANNELS

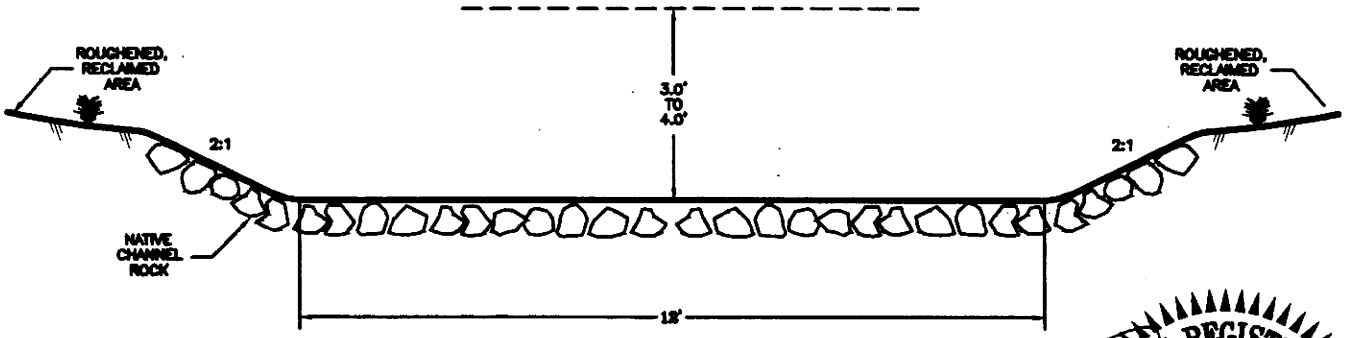

MAIN CHANNELS

SUMMARY TABLE			
CHANNEL	*FLOW DEPTH (FT.)	FREEBOARD (FT.)	VELOCITY (FPS)
RC-DD	0.07	1.43	3.36
RC-FF	0.07	1.43	3.40
RC-GG	0.68	2.32	7.70
RC-JJ	0.11	1.39	4.65
RC-KK	0.40	2.60	6.96
RC-MM	0.04	1.46	3.15
RC-PP	0.05	1.45	3.51
RC-QQ	0.92	3.08	9.13

* BASED ON 100 YEAR – 6 HOUR STORM RUNOFF.

Figure 12

APPENDIX 1

WEST RIDGE

COMPUTER BACKUP

48" CULVERT OUTLET

RIP-RAP APRON

FLOW VELOCITY CALCULATIONS

Title of run: NATURAL (100/6)

Solving for.....= Depth Normal

Trapedeziod

Flow depth (ft).....= 1.10

First Side slope.....= 1.0

Second Side slope.....= 1.0

Bottom width (ft).....= 8.00

Slope of diversion.....= 0.0630

Manning"s n.....= 0.035

CFS.....= 100.01

Cross section area (sqft)..= 10.03

Hydrualic radius.....= 0.90

fps.....= 9.98

Froude number.....= 1.85

Title of run: APRON (100/6)

Solving for.....= Depth Normal

Trapedeziod

Flow depth (ft).....= 1.74

First Side slope.....= 2.0

Second Side slope.....= 2.0

Bottom width (ft).....= 8.00

Slope of diversion.....= 0.0100

Manning"s n.....= 0.035

CFS.....= 100.01

Cross section area (sqft)..= 20.05

Hydrualic radius.....= 1.27

fps.....= 4.99

Froude number.....= 0.78

WATERSHED RUNOFF

CALCULATIONS

Project Title = WEST RIDGE UA-AA (10/6)
WATERSHED HYDROGRAPH
Inflow into structure # 1
Structure type: Null

-- Watershed data for watershed # 1

Curve number	=	72.0
Area	=	732.0 acres
Hydraulic length	=	6400.00 Feet
Elevation change	=	1738.0 feet.
Concentration time	=	0.49 hours
Concentration time type	=	SCS Upland Curves
Unit hydrograph type	=	Forested

-- Total Area = 732.0 acres

-- Storm data

Total precipitation	=	1.3 inches
Storm type	=	SCS 6 hour design storm
Peak Discharge	=	12.48 cfs
Discharge volume	=	3.77 acre ft

```
Project Title          = WEST RIDGE UA-AA (10/24)
WATERSHED HYDROGRAPH
    Inflow into structure #  1
    Structure type:          Null


-- Watershed data for watershed # 1
    Curve number              =    72.0
    Area                      =   732.0 acres
    Hydraulic length          = 6400.00 Feet
    Elevation change          =  1738.0 feet.
    Concentration time        =    0.49 hours
    Concentration time type   = SCS Upland Curves
    Unit hydrograph type      = Forested

-- Total Area            =   732.0 acres

-- Storm data
    Total precipitation   =     2.0 inches
    Storm type            = SCS Type 2 storm, 24 hour storm
    Peak Discharge        =   44.04 cfs
    Discharge volume      =   17.83 acre ft
```

Project Title = WEST RIDGE UA-AA (25/6)
WATERSHED HYDROGRAPH
Inflow into structure # 1
Structure type: Null

-- Watershed data for watershed # 1

Curve number	=	72.0
Area	=	732.0 acres
Hydraulic length	=	6400.00 Feet
Elevation change	=	1738.0 feet.
Concentration time	=	0.49 hours
Concentration time type	=	SCS Upland Curves
Unit hydrograph type	=	Forested

-- Total Area = 732.0 acres

-- Storm data

Total precipitation	=	1.6 inches
Storm type	=	SCS 6 hour design storm
Peak Discharge	=	24.94 cfs
Discharge volume	=	8.75 acre ft

Project Title = WEST RIDGE UA-AA (100/6)
WATERSHED HYDROGRAPH
Inflow into structure # 1
Structure type: Null

-- Watershed data for watershed # 1

Curve number	=	72.0
Area	=	732.0 acres
Hydraulic length	=	6400.00 Feet
Elevation change	=	1738.0 feet.
Concentration time	=	0.49 hours
Concentration time type	=	SCS Upland Curves
Unit hydrograph type	=	Forested

-- Total Area = 732.0 acres

-- Storm data

Total precipitation	=	2.0 inches
Storm type	=	SCS 6 hour design storm
Peak Discharge	=	45.45 cfs
Discharge volume	=	17.83 acre ft

Project Title = WEST RIDGE UA-DD (10/6)
WATERSHED HYDROGRAPH
Inflow into structure # 1
Structure type: Null

-- Watershed data for watershed # 1

Curve number	=	65.0
Area	=	22.5 acres
Hydraulic length	=	1650.00 Feet
Elevation change	=	940.0 feet.
Concentration time	=	0.09 hours
Concentration time type	=	SCS Upland Curves
Unit hydrograph type	=	Forested

-- Total Area = 22.5 acres

-- Storm data

Total precipitation	=	1.3 inches
Storm type	=	SCS 6 hour design storm
Peak Discharge	=	0.15 cfs
Discharge volume	=	0.02 acre ft

Project Title = WEST RIDGE UA-DD (10/24)
WATERSHED HYDROGRAPH
Inflow into structure # 1
Structure type: Null

-- Watershed data for watershed # 1

Curve number	=	65.0
Area	=	22.5 acres
Hydraulic length	=	1650.00 Feet
Elevation change	=	940.0 feet.
Concentration time	=	0.09 hours
Concentration time type	=	SCS Upland Curves
Unit hydrograph type	=	Forested

-- Total Area = 22.5 acres

-- Storm data

Total precipitation	=	2.0 inches
Storm type	=	SCS Type 2 storm, 24 hour storm
Peak Discharge	=	0.64 cfs
Discharge volume	=	0.25 acre ft

```
Project Title          = WEST RIDGE UA-DD (25/6)
WATERSHED HYDROGRAPH
     Inflow into structure #  1
     Structure type:          Null


-- Watershed data for watershed # 1
    Curve number              =    65.0
    Area                      =    22.5 acres
    Hydraulic length          = 1650.00 Feet
    Elevation change          =   940.0 feet.
    Concentration time        =    0.09 hours
    Concentration time type   = SCS Upland Curves
    Unit hydrograph type      = Forested

-- Total Area            =    22.5 acres

-- Storm data
    Total precipitation   =     1.6 inches
    Storm type            = SCS 6 hour design storm
    Peak Discharge        =    0.44 cfs
    Discharge volume      =    0.09 acre ft
```

Project Title = WEST RIDGE UA-DD (100/6)
WATERSHED HYDROGRAPH
Inflow into structure # 1
Structure type: Null

-- Watershed data for watershed # 1

Curve number	=	65.0
Area	=	22.5 acres
Hydraulic length	=	1650.00 Feet
Elevation change	=	940.0 feet.
Concentration time	=	0.09 hours
Concentration time type	=	SCS Upland Curves
Unit hydrograph type	=	Forested

-- Total Area = 22.5 acres

-- Storm data

Total precipitation	=	2.0 inches
Storm type	=	SCS 6 hour design storm
Peak Discharge	=	0.92 cfs
Discharge volume	=	0.25 acre ft

Project Title = WEST RIDGE UA-FF (10/6)
WATERSHED HYDROGRAPH
Inflow into structure # 1
Structure type: Null

-- Watershed data for watershed # 1

Curve number	=	65.0
Area	=	23.3 acres
Hydraulic length	=	1579.00 Feet
Elevation change	=	1000.0 feet.
Concentration time	=	0.08 hours
Concentration time type	=	SCS Upland Curves
Unit hydrograph type	=	Forested

-- Total Area = 23.3 acres

-- Storm data

Total precipitation	=	1.3 inches
Storm type	=	SCS 6 hour design storm
Peak Discharge	=	0.16 cfs
Discharge volume	=	0.02 acre ft

Project Title = WEST RIDGE UA-FF (10/24)
WATERSHED HYDROGRAPH
Inflow into structure # 1
Structure type: Null

-- Watershed data for watershed # 1

Curve number	=	65.0
Area	=	23.3 acres
Hydraulic length	=	1579.00 Feet
Elevation change	=	1000.0 feet.
Concentration time	=	0.08 hours
Concentration time type	=	SCS Upland Curves
Unit hydrograph type	=	Forested

-- Total Area = 23.3 acres

-- Storm data

Total precipitation	=	2.0 inches
Storm type	=	SCS Type 2 storm, 24 hour storm
Peak Discharge	=	0.67 cfs
Discharge volume	=	0.26 acre ft

Project Title = WEST RIDGE UA-FF (25/6)
WATERSHED HYDROGRAPH
Inflow into structure # 1
Structure type: Null

-- Watershed data for watershed # 1

Curve number	=	65.0
Area	=	23.3 acres
Hydraulic length	=	1579.00 Feet
Elevation change	=	1000.0 feet.
Concentration time	=	0.08 hours
Concentration time type	=	SCS Upland Curves
Unit hydrograph type	=	Forested

-- Total Area = 23.3 acres

-- Storm data

Total precipitation	=	1.6 inches
Storm type	=	SCS 6 hour design storm
Peak Discharge	=	0.46 cfs
Discharge volume	=	0.09 acre ft

Project Title = WEST RIDGE UA-FF (100/6)
WATERSHED HYDROGRAPH
Inflow into structure # 1
Structure type: Null

-- Watershed data for watershed # 1

Curve number	=	65.0
Area	=	23.3 acres
Hydraulic length	=	1579.00 Feet
Elevation change	=	1000.0 feet.
Concentration time	=	0.08 hours
Concentration time type	=	SCS Upland Curves
Unit hydrograph type	=	Forested

-- Total Area = 23.3 acres

-- Storm data

Total precipitation	=	2.0 inches
Storm type	=	SCS 6 hour design storm
Peak Discharge	=	0.95 cfs
Discharge volume	=	0.26 acre ft

Project Title = WEST RIDGE UA-HH (10/6)
WATERSHED HYDROGRAPH
Inflow into structure # 1
Structure type: Null

-- Watershed data for watershed # 1

Curve number	=	76.0
Area	=	236.8 acres
Hydraulic length	=	4262.00 Feet
Elevation change	=	1616.0 feet.
Concentration time	=	0.27 hours
Concentration time type	=	SCS Upland Curves
Unit hydrograph type	=	Forested

-- Total Area = 236.8 acres

-- Storm data

Total precipitation	=	1.3 inches
Storm type	=	SCS 6 hour design storm
Peak Discharge	=	7.37 cfs
Discharge volume	=	2.30 acre ft

Project Title = WEST RIDGE UA-HH (10/24)
WATERSHED HYDROGRAPH
Inflow into structure # 1
Structure type: Null

-- Watershed data for watershed # 1

Curve number	=	76.0
Area	=	236.8 acres
Hydraulic length	=	4262.00 Feet
Elevation change	=	1616.0 feet.
Concentration time	=	0.27 hours
Concentration time type	=	SCS Upland Curves
Unit hydrograph type	=	Forested

-- Total Area = 236.8 acres

-- Storm data

Total precipitation	=	2.0 inches
Storm type	=	SCS Type 2 storm, 24 hour storm
Peak Discharge	=	32.78 cfs
Discharge volume	=	8.16 acre ft

Project Title = WEST RIDGE UA-HH (100/6)
WATERSHED HYDROGRAPH
Inflow into structure # 1
Structure type: Null

-- Watershed data for watershed # 1

Curve number	=	76.0
Area	=	236.8 acres
Hydraulic length	=	4262.00 Feet
Elevation change	=	1616.0 feet.
Concentration time	=	0.27 hours
Concentration time type	=	SCS Upland Curves
Unit hydrograph type	=	Forested

-- Total Area = 236.8 acres

-- Storm data

Total precipitation	=	2.0 inches
Storm type	=	SCS 6 hour design storm
Peak Discharge	=	25.44 cfs
Discharge volume	=	8.16 acre ft

Project Title = WEST RIDGE UA-JJ (10/6)
WATERSHED HYDROGRAPH
Inflow into structure # 1
Structure type: Null

-- Watershed data for watershed # 1

Curve number	=	80.0
Area	=	7.2 acres
Hydraulic length	=	1285.00 Feet
Elevation change	=	886.0 feet.
Concentration time	=	0.06 hours
Concentration time type	=	SCS Upland Curves
Unit hydrograph type	=	Forested

-- Total Area = 7.2 acres

-- Storm data

Total precipitation	=	1.3 inches
Storm type	=	SCS 6 hour design storm
Peak Discharge	=	0.50 cfs
Discharge volume	=	0.12 acre ft

Project Title = WEST RIDGE UA-JJ (10/24)
WATERSHED HYDROGRAPH
Inflow into structure # 1
Structure type: Null

-- Watershed data for watershed # 1

Curve number	=	80.0
Area	=	7.2 acres
Hydraulic length	=	1285.00 Feet
Elevation change	=	886.0 feet.
Concentration time	=	0.06 hours
Concentration time type	=	SCS Upland Curves
Unit hydrograph type	=	Forested

-- Total Area = 7.2 acres

-- Storm data

Total precipitation	=	2.0 inches
Storm type	=	SCS Type 2 storm, 24 hour storm
Peak Discharge	=	2.65 cfs
Discharge volume	=	0.34 acre ft

Project Title = WEST RIDGE UA-JJ (25/6)
WATERSHED HYDROGRAPH
Inflow into structure # 1
Structure type: Null

-- Watershed data for watershed # 1

Curve number	=	80.0
Area	=	7.2 acres
Hydraulic length	=	1285.00 Feet
Elevation change	=	886.0 feet.
Concentration time	=	0.06 hours
Concentration time type	=	SCS Upland Curves
Unit hydrograph type	=	Forested

-- Total Area = 7.2 acres

-- Storm data

Total precipitation	=	1.6 inches
Storm type	=	SCS 6 hour design storm
Peak Discharge	=	1.12 cfs
Discharge volume	=	0.20 acre ft

Project Title = WEST RIDGE UA-JJ (100/6)
WATERSHED HYDROGRAPH
Inflow into structure # 1
Structure type: Null

-- Watershed data for watershed # 1

Curve number	=	80.0
Area	=	7.2 acres
Hydraulic length	=	1285.00 Feet
Elevation change	=	886.0 feet.
Concentration time	=	0.06 hours
Concentration time type	=	SCS Upland Curves
Unit hydrograph type	=	Forested

-- Total Area = 7.2 acres

-- Storm data

Total precipitation	=	2.0 inches
Storm type	=	SCS 6 hour design storm
Peak Discharge	=	2.16 cfs
Discharge volume	=	0.34 acre ft

Project Title = WEST RIDGE UA-MM (10/6)
WATERSHED HYDROGRAPH
Inflow into structure # 1
Structure type: Null

-- Watershed data for watershed # 1

Curve number	=	64.0
Area	=	13.8 acres
Hydraulic length	=	1722.00 Feet
Elevation change	=	1113.0 feet.
Concentration time	=	0.08 hours
Concentration time type	=	SCS Upland Curves
Unit hydrograph type	=	Forested

-- Total Area = 13.8 acres

-- Storm data

Total precipitation	=	1.3 inches
Storm type	=	SCS 6 hour design storm
Peak Discharge	=	0.07 cfs
Discharge volume	=	0.01 acre ft

Project Title = WEST RIDGE UA-MM (10/24)
WATERSHED HYDROGRAPH
Inflow into structure # 1
Structure type: Null

-- Watershed data for watershed # 1

Curve number	=	64.0
Area	=	13.8 acres
Hydraulic length	=	1722.00 Feet
Elevation change	=	1113.0 feet.
Concentration time	=	0.08 hours
Concentration time type	=	SCS Upland Curves
Unit hydrograph type	=	Forested

-- Total Area = 13.8 acres

-- Storm data

Total precipitation	=	2.0 inches
Storm type	=	SCS Type 2 storm, 24 hour storm
Peak Discharge	=	0.32 cfs
Discharge volume	=	0.14 acre ft

Project Title = WEST RIDGE UA-MM (25/6)
WATERSHED HYDROGRAPH
Inflow into structure # 1
Structure type: Null

-- Watershed data for watershed # 1

Curve number	=	64.0
Area	=	13.8 acres
Hydraulic length	=	1722.00 Feet
Elevation change	=	1113.0 feet.
Concentration time	=	0.08 hours
Concentration time type	=	SCS Upland Curves
Unit hydrograph type	=	Forested

-- Total Area = 13.8 acres

-- Storm data

Total precipitation	=	1.6 inches
Storm type	=	SCS 6 hour design storm
Peak Discharge	=	0.24 cfs
Discharge volume	=	0.04 acre ft

Project Title = WEST RIDGE UA-MM (100/6)
WATERSHED HYDROGRAPH
Inflow into structure # 1
Structure type: Null

-- Watershed data for watershed # 1

Curve number	=	64.0
Area	=	13.8 acres
Hydraulic length	=	1722.00 Feet
Elevation change	=	1113.0 feet.
Concentration time	=	0.08 hours
Concentration time type	=	SCS Upland Curves
Unit hydrograph type	=	Forested

-- Total Area = 13.8 acres

-- Storm data

Total precipitation	=	2.0 inches
Storm type	=	SCS 6 hour design storm
Peak Discharge	=	0.52 cfs
Discharge volume	=	0.14 acre ft

Project Title = WEST RIDGE UA-PP (10/6)
WATERSHED HYDROGRAPH
Inflow into structure # 1
Structure type: Null

-- Watershed data for watershed # 1

Curve number	=	65.0
Area	=	16.9 acres
Hydraulic length	=	1723.00 Feet
Elevation change	=	1183.0 feet.
Concentration time	=	0.08 hours
Concentration time type	=	SCS Upland Curves
Unit hydrograph type	=	Forested

-- Total Area = 16.9 acres

-- Storm data

Total precipitation	=	1.3 inches
Storm type	=	SCS 6 hour design storm
Peak Discharge	=	0.11 cfs
Discharge volume	=	0.01 acre ft

Project Title = WEST RIDGE UA-PP (10/24)
WATERSHED HYDROGRAPH
Inflow into structure # 1
Structure type: Null

-- Watershed data for watershed # 1

Curve number	=	65.0
Area	=	16.9 acres
Hydraulic length	=	1723.00 Feet
Elevation change	=	1183.0 feet.
Concentration time	=	0.08 hours
Concentration time type	=	SCS Upland Curves
Unit hydrograph type	=	Forested

-- Total Area = 16.9 acres

-- Storm data

Total precipitation	=	2.0 inches
Storm type	=	SCS Type 2 storm, 24 hour storm
Peak Discharge	=	0.49 cfs
Discharge volume	=	0.19 acre ft

Project Title = WEST RIDGE UA-PP (25/6)

WATERSHED HYDROGRAPH

Inflow into structure # 1

Structure type: Null

-- Watershed data for watershed # 1

Curve number	=	65.0
Area	=	16.9 acres
Hydraulic length	=	1723.00 Feet
Elevation change	=	1183.0 feet.
Concentration time	=	0.08 hours
Concentration time type	=	SCS Upland Curves
Unit hydrograph type	=	Forested

-- Total Area = 16.9 acres

-- Storm data

Total precipitation	=	1.6 inches
Storm type	=	SCS 6 hour design storm
Peak Discharge	=	0.33 cfs
Discharge volume	=	0.07 acre ft

Project Title = WEST RIDGE UA-PP (100/6)
WATERSHED HYDROGRAPH
Inflow into structure # 1
Structure type: Null

-- Watershed data for watershed # 1

Curve number	=	65.0
Area	=	16.9 acres
Hydraulic length	=	1723.00 Feet
Elevation change	=	1183.0 feet.
Concentration time	=	0.08 hours
Concentration time type	=	SCS Upland Curves
Unit hydrograph type	=	Forested

-- Total Area = 16.9 acres

-- Storm data

Total precipitation	=	2.0 inches
Storm type	=	SCS 6 hour design storm
Peak Discharge	=	0.69 cfs
Discharge volume	=	0.19 acre ft

Project Title = WEST RIDGE UA-1a (10/6)
WATERSHED HYDROGRAPH
Inflow into structure # 1
Structure type: Null

-- Watershed data for watershed # 1

Curve number	=	64.0
Area	=	10.3 acres
Hydraulic length	=	1556.00 Feet
Elevation change	=	930.0 feet.
Concentration time	=	0.08 hours
Concentration time type	=	SCS Upland Curves
Unit hydrograph type	=	Forested

-- Total Area = 10.3 acres

-- Storm data

Total precipitation	=	1.3 inches
Storm type	=	SCS 6 hour design storm
Peak Discharge	=	0.05 cfs
Discharge volume	=	0.00 acre ft

Project Title = WEST RIDGE UA-1a (10/24)
WATERSHED HYDROGRAPH
Inflow into structure # 1
Structure type: Null

-- Watershed data for watershed # 1

Curve number	=	64.0
Area	=	10.3 acres
Hydraulic length	=	1556.00 Feet
Elevation change	=	930.0 feet.
Concentration time	=	0.08 hours
Concentration time type	=	SCS Upland Curves
Unit hydrograph type	=	Forested

-- Total Area = 10.3 acres

-- Storm data

Total precipitation	=	2.0 inches
Storm type	=	SCS Type 2 storm, 24 hour storm
Peak Discharge	=	0.24 cfs
Discharge volume	=	0.10 acre ft

Project Title = WEST RIDGE UA-1a (25/6)
WATERSHED HYDROGRAPH
Inflow into structure # 1
Structure type: Null

-- Watershed data for watershed # 1

Curve number	=	64.0
Area	=	10.3 acres
Hydraulic length	=	1556.00 Feet
Elevation change	=	930.0 feet.
Concentration time	=	0.08 hours
Concentration time type	=	SCS Upland Curves
Unit hydrograph type	=	Forested

-- Total Area = 10.3 acres

-- Storm data

Total precipitation	=	1.6 inches
Storm type	=	SCS 6 hour design storm
Peak Discharge	=	0.18 cfs
Discharge volume	=	0.03 acre ft

Project Title = WEST RIDGE UA-1a (100/6)
WATERSHED HYDROGRAPH
Inflow into structure # 1
Structure type: Null

-- Watershed data for watershed # 1

Curve number	=	64.0
Area	=	10.3 acres
Hydraulic length	=	1556.00 Feet
Elevation change	=	930.0 feet.
Concentration time	=	0.08 hours
Concentration time type	=	SCS Upland Curves
Unit hydrograph type	=	Forested

-- Total Area = 10.3 acres

-- Storm data

Total precipitation	=	2.0 inches
Storm type	=	SCS 6 hour design storm
Peak Discharge	=	0.38 cfs
Discharge volume	=	0.10 acre ft

Project Title = WEST RIDGE UA-1b (10/6)
WATERSHED HYDROGRAPH
Inflow into structure # 1
Structure type: Null

-- Watershed data for watershed # 1

Curve number	=	80.0
Area	=	14.5 acres
Hydraulic length	=	1427.00 Feet
Elevation change	=	800.0 feet.
Concentration time	=	0.08 hours
Concentration time type	=	SCS Upland Curves
Unit hydrograph type	=	Forested

-- Total Area = 14.5 acres

-- Storm data

Total precipitation	=	1.3 inches
Storm type	=	SCS 6 hour design storm
Peak Discharge	=	0.97 cfs
Discharge volume	=	0.23 acre ft

```
Project Title          = WEST RIDGE UA-1b (10/24)
WATERSHED HYDROGRAPH
    Inflow into structure #  1
    Structure type:          Null


-- Watershed data for watershed # 1
    Curve number              =    80.0
    Area                      =    14.5 acres
    Hydraulic length          = 1427.00 Feet
    Elevation change          =   800.0 feet.
    Concentration time        =    0.08 hours
    Concentration time type   = SCS Upland Curves
    Unit hydrograph type      = Forested

-- Total Area            =    14.5 acres

-- Storm data
    Total precipitation   =     2.0 inches
    Storm type            = SCS Type 2 storm, 24 hour storm
    Peak Discharge        =    5.20 cfs
    Discharge volume      =    0.68 acre ft
```

Project Title = WEST RIDGE UA-1b (25/6)
WATERSHED HYDROGRAPH
Inflow into structure # 1
Structure type: Null

-- Watershed data for watershed # 1

Curve number	=	80.0
Area	=	14.5 acres
Hydraulic length	=	1427.00 Feet
Elevation change	=	800.0 feet.
Concentration time	=	0.08 hours
Concentration time type	=	SCS Upland Curves
Unit hydrograph type	=	Forested

-- Total Area = 14.5 acres

-- Storm data

Total precipitation	=	1.6 inches
Storm type	=	SCS 6 hour design storm
Peak Discharge	=	2.19 cfs
Discharge volume	=	0.41 acre ft

Project Title = WEST RIDGE UA-1b (100/6)
WATERSHED HYDROGRAPH
Inflow into structure # 1
Structure type: Null

-- Watershed data for watershed # 1

Curve number	=	80.0
Area	=	14.5 acres
Hydraulic length	=	1427.00 Feet
Elevation change	=	800.0 feet.
Concentration time	=	0.08 hours
Concentration time type	=	SCS Upland Curves
Unit hydrograph type	=	Forested

-- Total Area = 14.5 acres

-- Storm data

Total precipitation	=	2.0 inches
Storm type	=	SCS 6 hour design storm
Peak Discharge	=	4.22 cfs
Discharge volume	=	0.68 acre ft

Project Title = WEST RIDGE UA-2a (10/6)
WATERSHED HYDROGRAPH
Inflow into structure # 1
Structure type: Null

-- Watershed data for watershed # 1

Curve number	=	64.0
Area	=	3.5 acres
Hydraulic length	=	917.00 Feet
Elevation change	=	610.0 feet.
Concentration time	=	0.04 hours
Concentration time type	=	SCS Upland Curves
Unit hydrograph type	=	Forested

-- Total Area = 3.5 acres

-- Storm data

Total precipitation	=	1.3 inches
Storm type	=	SCS 6 hour design storm
Peak Discharge	=	0.02 cfs
Discharge volume	=	0.00 acre ft

Project Title = WEST RIDGE UA-2a (10/24)
WATERSHED HYDROGRAPH
Inflow into structure # 1
Structure type: Null

-- Watershed data for watershed # 1

Curve number	=	64.0
Area	=	3.5 acres
Hydraulic length	=	917.00 Feet
Elevation change	=	610.0 feet.
Concentration time	=	0.04 hours
Concentration time type	=	SCS Upland Curves
Unit hydrograph type	=	Forested

-- Total Area = 3.5 acres

-- Storm data

Total precipitation	=	2.0 inches
Storm type	=	SCS Type 2 storm, 24 hour storm
Peak Discharge	=	0.09 cfs
Discharge volume	=	0.03 acre ft

Project Title = WEST RIDGE UA-2a (25/6)
WATERSHED HYDROGRAPH
Inflow into structure # 1
Structure type: Null

-- Watershed data for watershed # 1

Curve number	=	64.0
Area	=	3.5 acres
Hydraulic length	=	917.00 Feet
Elevation change	=	610.0 feet.
Concentration time	=	0.04 hours
Concentration time type	=	SCS Upland Curves
Unit hydrograph type	=	Forested

-- Total Area = 3.5 acres

-- Storm data

Total precipitation	=	1.6 inches
Storm type	=	SCS 6 hour design storm
Peak Discharge	=	0.06 cfs
Discharge volume	=	0.01 acre ft

Project Title = WEST RIDGE UA-2a (100/6)
WATERSHED HYDROGRAPH
Inflow into structure # 1
Structure type: Null

-- Watershed data for watershed # 1

Curve number	=	64.0
Area	=	3.5 acres
Hydraulic length	=	917.00 Feet
Elevation change	=	610.0 feet.
Concentration time	=	0.04 hours
Concentration time type	=	SCS Upland Curves
Unit hydrograph type	=	Forested

-- Total Area = 3.5 acres

-- Storm data

Total precipitation	=	2.0 inches
Storm type	=	SCS 6 hour design storm
Peak Discharge	=	0.13 cfs
Discharge volume	=	0.03 acre ft

Project Title = WEST RIDGE UA-2b (10/6)
WATERSHED HYDROGRAPH
Inflow into structure # 1
Structure type: Null

-- Watershed data for watershed # 1

Curve number	=	80.0
Area	=	10.2 acres
Hydraulic length	=	972.00 Feet
Elevation change	=	768.0 feet.
Concentration time	=	0.04 hours
Concentration time type	=	SCS Upland Curves
Unit hydrograph type	=	Forested

-- Total Area = 10.2 acres

-- Storm data

Total precipitation	=	1.3 inches
Storm type	=	SCS 6 hour design storm
Peak Discharge	=	0.75 cfs
Discharge volume	=	0.17 acre ft

Project Title = WEST RIDGE UA-2b (10/24)
WATERSHED HYDROGRAPH
Inflow into structure # 1
Structure type: Null

-- Watershed data for watershed # 1

Curve number	=	80.0
Area	=	10.2 acres
Hydraulic length	=	972.00 Feet
Elevation change	=	768.0 feet.
Concentration time	=	0.04 hours
Concentration time type	=	SCS Upland Curves
Unit hydrograph type	=	Forested

-- Total Area = 10.2 acres

-- Storm data

Total precipitation	=	2.0 inches
Storm type	=	SCS Type 2 storm, 24 hour storm
Peak Discharge	=	3.84 cfs
Discharge volume	=	0.48 acre ft

Project Title = WEST RIDGE UA-2b (25/6)
WATERSHED HYDROGRAPH
Inflow into structure # 1
Structure type: Null

-- Watershed data for watershed # 1

Curve number	=	80.0
Area	=	10.2 acres
Hydraulic length	=	972.00 Feet
Elevation change	=	768.0 feet.
Concentration time	=	0.04 hours
Concentration time type	=	SCS Upland Curves
Unit hydrograph type	=	Forested

-- Total Area = 10.2 acres

-- Storm data

Total precipitation	=	1.6 inches
Storm type	=	SCS 6 hour design storm
Peak Discharge	=	1.64 cfs
Discharge volume	=	0.29 acre ft

Project Title = WEST RIDGE UA-2b (100/6)
WATERSHED HYDROGRAPH
Inflow into structure # 1
Structure type: Null

-- Watershed data for watershed # 1

Curve number	=	80.0
Area	=	10.2 acres
Hydraulic length	=	972.00 Feet
Elevation change	=	768.0 feet.
Concentration time	=	0.04 hours
Concentration time type	=	SCS Upland Curves
Unit hydrograph type	=	Forested

-- Total Area = 10.2 acres

-- Storm data

Total precipitation	=	2.0 inches
Storm type	=	SCS 6 hour design storm
Peak Discharge	=	3.13 cfs
Discharge volume	=	0.48 acre ft

Project Title = WEST RIDGE UA-3 (10/6)
WATERSHED HYDROGRAPH
Inflow into structure # 1
Structure type: Null

-- Watershed data for watershed # 1

Curve number	=	80.0
Area	=	7.8 acres
Hydraulic length	=	780.00 Feet
Elevation change	=	578.0 feet.
Concentration time	=	0.04 hours
Concentration time type	=	SCS Upland Curves
Unit hydrograph type	=	Forested

-- Total Area = 7.8 acres

-- Storm data

Total precipitation	=	1.3 inches
Storm type	=	SCS 6 hour design storm
Peak Discharge	=	0.58 cfs
Discharge volume	=	0.13 acre ft

Project Title = WEST RIDGE UA-3 (10/24)
WATERSHED HYDROGRAPH
Inflow into structure # 1
Structure type: Null

-- Watershed data for watershed # 1

Curve number	=	80.0
Area	=	7.8 acres
Hydraulic length	=	780.00 Feet
Elevation change	=	578.0 feet.
Concentration time	=	0.04 hours
Concentration time type	=	SCS Upland Curves
Unit hydrograph type	=	Forested

-- Total Area = 7.8 acres

-- Storm data

Total precipitation	=	2.0 inches
Storm type	=	SCS Type 2 storm, 24 hour storm
Peak Discharge	=	2.93 cfs
Discharge volume	=	0.36 acre ft

Project Title = WEST RIDGE UA-3 (25/6)
WATERSHED HYDROGRAPH
Inflow into structure # 1
Structure type: Null

-- Watershed data for watershed # 1

Curve number	=	80.0
Area	=	7.8 acres
Hydraulic length	=	780.00 Feet
Elevation change	=	578.0 feet.
Concentration time	=	0.04 hours
Concentration time type	=	SCS Upland Curves
Unit hydrograph type	=	Forested

-- Total Area = 7.8 acres

-- Storm data

Total precipitation	=	1.6 inches
Storm type	=	SCS 6 hour design storm
Peak Discharge	=	1.26 cfs
Discharge volume	=	0.22 acre ft

```
Project Title          = WEST RIDGE UA-3 (100/6)
WATERSHED HYDROGRAPH
     Inflow into structure #  1
     Structure type:          Null


-- Watershed data for watershed # 1
    Curve number              =    80.0
    Area                      =     7.8 acres
    Hydraulic length          =  780.00 Feet
    Elevation change          =   578.0 feet.
    Concentration time        =    0.04 hours
    Concentration time type = SCS Upland Curves
    Unit hydrograph type      = Forested

-- Total Area            =     7.8 acres

-- Storm data
    Total precipitation  =     2.0 inches
    Storm type           = SCS 6 hour design storm
    Peak Discharge       =    2.39 cfs
    Discharge volume     =    0.36 acre ft
```

Project Title = WEST RIDGE UA-4 (10/6)
WATERSHED HYDROGRAPH
Inflow into structure # 1
Structure type: Null

-- Watershed data for watershed # 1

Curve number	=	64.0
Area	=	3.6 acres
Hydraulic length	=	850.00 Feet
Elevation change	=	628.0 feet.
Concentration time	=	0.04 hours
Concentration time type	=	SCS Upland Curves
Unit hydrograph type	=	Forested

-- Total Area = 3.6 acres

-- Storm data

Total precipitation	=	1.3 inches
Storm type	=	SCS 6 hour design storm
Peak Discharge	=	0.02 cfs
Discharge volume	=	0.00 acre ft

Project Title = WEST RIDGE UA-4 (10/24)
WATERSHED HYDROGRAPH
Inflow into structure # 1
Structure type: Null

-- Watershed data for watershed # 1

Curve number	=	64.0
Area	=	3.6 acres
Hydraulic length	=	850.00 Feet
Elevation change	=	628.0 feet.
Concentration time	=	0.04 hours
Concentration time type	=	SCS Upland Curves
Unit hydrograph type	=	Forested

-- Total Area = 3.6 acres

-- Storm data

Total precipitation	=	2.0 inches
Storm type	=	SCS Type 2 storm, 24 hour storm
Peak Discharge	=	0.09 cfs
Discharge volume	=	0.04 acre ft

Project Title = WEST RIDGE UA-4 (25/6)
WATERSHED HYDROGRAPH
Inflow into structure # 1
Structure type: Null

-- Watershed data for watershed # 1

Curve number	=	64.0
Area	=	3.6 acres
Hydraulic length	=	850.00 Feet
Elevation change	=	628.0 feet.
Concentration time	=	0.04 hours
Concentration time type	=	SCS Upland Curves
Unit hydrograph type	=	Forested

-- Total Area = 3.6 acres

-- Storm data

Total precipitation	=	1.6 inches
Storm type	=	SCS 6 hour design storm
Peak Discharge	=	0.06 cfs
Discharge volume	=	0.01 acre ft

Project Title = WEST RIDGE UA-4 (100/6)
WATERSHED HYDROGRAPH
Inflow into structure # 1
Structure type: Null

-- Watershed data for watershed # 1

Curve number	=	64.0
Area	=	3.6 acres
Hydraulic length	=	850.00 Feet
Elevation change	=	628.0 feet.
Concentration time	=	0.04 hours
Concentration time type	=	SCS Upland Curves
Unit hydrograph type	=	Forested

-- Total Area = 3.6 acres

-- Storm data

Total precipitation	=	2.0 inches
Storm type	=	SCS 6 hour design storm
Peak Discharge	=	0.13 cfs
Discharge volume	=	0.04 acre ft

```
Project Title          = WEST RIDGE UA-5 (10/6)
WATERSHED HYDROGRAPH
    Inflow into structure #  1
    Structure type:          Null


-- Watershed data for watershed # 1
    Curve number              =    64.0
    Area                      =     1.3 acres
    Hydraulic length          =  400.00 Feet
    Elevation change          =   298.0 feet.
    Concentration time        =    0.02 hours
    Concentration time type = SCS Upland Curves
    Unit hydrograph type      = Forested

-- Total Area            =     1.3 acres

-- Storm data
    Total precipitation  =     1.3 inches
    Storm type           = SCS 6 hour design storm
    Peak Discharge       =    0.01 cfs
    Discharge volume     =    0.00 acre ft
```

Project Title = WEST RIDGE UA-5 (10/24)
WATERSHED HYDROGRAPH
Inflow into structure # 1
Structure type: Null

-- Watershed data for watershed # 1

Curve number	=	64.0
Area	=	1.3 acres
Hydraulic length	=	400.00 Feet
Elevation change	=	298.0 feet.
Concentration time	=	0.02 hours
Concentration time type	=	SCS Upland Curves
Unit hydrograph type	=	Forested

-- Total Area = 1.3 acres

-- Storm data

Total precipitation	=	2.0 inches
Storm type	=	SCS Type 2 storm, 24 hour storm
Peak Discharge	=	0.03 cfs
Discharge volume	=	0.01 acre ft

Project Title = WEST RIDGE UA-5 (25/6)
WATERSHED HYDROGRAPH
Inflow into structure # 1
Structure type: Null

-- Watershed data for watershed # 1

Curve number	=	64.0
Area	=	1.3 acres
Hydraulic length	=	400.00 Feet
Elevation change	=	298.0 feet.
Concentration time	=	0.02 hours
Concentration time type	=	SCS Upland Curves
Unit hydrograph type	=	Forested

-- Total Area = 1.3 acres

-- Storm data

Total precipitation	=	1.6 inches
Storm type	=	SCS 6 hour design storm
Peak Discharge	=	0.02 cfs
Discharge volume	=	0.00 acre ft

```
Project Title          = WEST RIDGE UA-5 (100/6)
WATERSHED HYDROGRAPH
     Inflow into structure #  1
     Structure type:          Null


-- Watershed data for watershed # 1
    Curve number              =    64.0
    Area                      =     1.3 acres
    Hydraulic length          =  400.00 Feet
    Elevation change          =   298.0 feet.
    Concentration time        =    0.02 hours
    Concentration time type = SCS Upland Curves
    Unit hydrograph type      = Forested

-- Total Area            =     1.3 acres

-- Storm data
    Total precipitation  =     2.0 inches
    Storm type           = SCS 6 hour design storm
    Peak Discharge       =    0.04 cfs
    Discharge volume     =    0.01 acre ft
```

Project Title = WEST RIDGE UA-7 (10/6)
WATERSHED HYDROGRAPH
Inflow into structure # 1
Structure type: Null

-- Watershed data for watershed # 1

Curve number	=	64.0
Area	=	3.0 acres
Hydraulic length	=	880.00 Feet
Elevation change	=	568.0 feet.
Concentration time	=	0.04 hours
Concentration time type	=	SCS Upland Curves
Unit hydrograph type	=	Forested

-- Total Area = 3.0 acres

-- Storm data

Total precipitation	=	1.3 inches
Storm type	=	SCS 6 hour design storm
Peak Discharge	=	0.01 cfs
Discharge volume	=	0.00 acre ft

Project Title = WEST RIDGE UA-7 (10/24)
WATERSHED HYDROGRAPH
Inflow into structure # 1
Structure type: Null

-- Watershed data for watershed # 1

Curve number	=	64.0
Area	=	3.0 acres
Hydraulic length	=	880.00 Feet
Elevation change	=	568.0 feet.
Concentration time	=	0.04 hours
Concentration time type	=	SCS Upland Curves
Unit hydrograph type	=	Forested

-- Total Area = 3.0 acres

-- Storm data

Total precipitation	=	2.0 inches
Storm type	=	SCS Type 2 storm, 24 hour storm
Peak Discharge	=	0.07 cfs
Discharge volume	=	0.03 acre ft

Project Title = WEST RIDGE UA-7 (25/6)
WATERSHED HYDROGRAPH
Inflow into structure # 1
Structure type: Null

-- Watershed data for watershed # 1

Curve number	=	64.0
Area	=	3.0 acres
Hydraulic length	=	880.00 Feet
Elevation change	=	568.0 feet.
Concentration time	=	0.04 hours
Concentration time type	=	SCS Upland Curves
Unit hydrograph type	=	Forested

-- Total Area = 3.0 acres

-- Storm data

Total precipitation	=	1.6 inches
Storm type	=	SCS 6 hour design storm
Peak Discharge	=	0.05 cfs
Discharge volume	=	0.01 acre ft

Project Title = WEST RIDGE UA-7 (100/6)
WATERSHED HYDROGRAPH
Inflow into structure # 1
Structure type: Null

-- Watershed data for watershed # 1

Curve number	=	64.0
Area	=	3.0 acres
Hydraulic length	=	880.00 Feet
Elevation change	=	568.0 feet.
Concentration time	=	0.04 hours
Concentration time type	=	SCS Upland Curves
Unit hydrograph type	=	Forested

-- Total Area = 3.0 acres

-- Storm data

Total precipitation	=	2.0 inches
Storm type	=	SCS 6 hour design storm
Peak Discharge	=	0.11 cfs
Discharge volume	=	0.03 acre ft

Project Title = WEST RIDGE UA-8 (10/6)
WATERSHED HYDROGRAPH
Inflow into structure # 1
Structure type: Null

-- Watershed data for watershed # 1

Curve number	=	80.0
Area	=	0.8 acres
Hydraulic length	=	403.00 Feet
Elevation change	=	348.0 feet.
Concentration time	=	0.02 hours
Concentration time type	=	SCS Upland Curves
Unit hydrograph type	=	Forested

-- Total Area = 0.8 acres

-- Storm data

Total precipitation	=	1.3 inches
Storm type	=	SCS 6 hour design storm
Peak Discharge	=	0.06 cfs
Discharge volume	=	0.01 acre ft

```
Project Title          = WEST RIDGE UA-8 (10/24)
WATERSHED HYDROGRAPH
    Inflow into structure #  1
    Structure type:          Null


-- Watershed data for watershed # 1
    Curve number              =    80.0
    Area                      =     0.8 acres
    Hydraulic length          =  403.00 Feet
    Elevation change          =   348.0 feet.
    Concentration time        =    0.02 hours
    Concentration time type = SCS Upland Curves
    Unit hydrograph type      = Forested

-- Total Area            =     0.8 acres

-- Storm data
    Total precipitation  =     2.0 inches
    Storm type           = SCS Type 2 storm, 24 hour storm
    Peak Discharge       =    0.32 cfs
    Discharge volume     =    0.04 acre ft
```

Project Title = WEST RIDGE UA-8 (25/6)
WATERSHED HYDROGRAPH
Inflow into structure # 1
Structure type: Null

-- Watershed data for watershed # 1

Curve number	=	80.0
Area	=	0.8 acres
Hydraulic length	=	403.00 Feet
Elevation change	=	348.0 feet.
Concentration time	=	0.02 hours
Concentration time type	=	SCS Upland Curves
Unit hydrograph type	=	Forested

-- Total Area = 0.8 acres

-- Storm data

Total precipitation	=	1.6 inches
Storm type	=	SCS 6 hour design storm
Peak Discharge	=	0.14 cfs
Discharge volume	=	0.02 acre ft

```
Project Title          = WEST RIDGE UA-8 (100/6)
WATERSHED HYDROGRAPH
     Inflow into structure #  1
     Structure type:          Null


-- Watershed data for watershed # 1
    Curve number              =    80.0
    Area                      =     0.8 acres
    Hydraulic length          =  403.00 Feet
    Elevation change          =   348.0 feet.
    Concentration time        =    0.02 hours
    Concentration time type = SCS Upland Curves
    Unit hydrograph type      = Forested

-- Total Area            =     0.8 acres

-- Storm data
    Total precipitation  =     2.0 inches
    Storm type           = SCS 6 hour design storm
    Peak Discharge       =    0.26 cfs
    Discharge volume     =    0.04 acre ft
```

Project Title = WEST RIDGE UA-9 (10/6)
WATERSHED HYDROGRAPH
Inflow into structure # 1
Structure type: Null

-- Watershed data for watershed # 1

Curve number	=	64.0
Area	=	3.4 acres
Hydraulic length	=	850.00 Feet
Elevation change	=	584.0 feet.
Concentration time	=	0.04 hours
Concentration time type	=	SCS Upland Curves
Unit hydrograph type	=	Forested

-- Total Area = 3.4 acres

-- Storm data

Total precipitation	=	1.3 inches
Storm type	=	SCS 6 hour design storm
Peak Discharge	=	0.02 cfs
Discharge volume	=	0.00 acre ft

```
Project Title          = WEST RIDGE UA-9 (10/24)
WATERSHED HYDROGRAPH
     Inflow into structure #  1
     Structure type:          Null


-- Watershed data for watershed # 1
    Curve number              =    64.0
    Area                      =     3.4 acres
    Hydraulic length          =  850.00 Feet
    Elevation change          =   584.0 feet.
    Concentration time        =    0.04 hours
    Concentration time type = SCS Upland Curves
    Unit hydrograph type      = Forested

-- Total Area            =     3.4 acres

-- Storm data
    Total precipitation  =     2.0 inches
    Storm type           = SCS Type 2 storm, 24 hour storm
    Peak Discharge       =    0.08 cfs
    Discharge volume     =    0.03 acre ft
```

Project Title = WEST RIDGE UA-9 (25/6)
WATERSHED HYDROGRAPH
Inflow into structure # 1
Structure type: Null

-- Watershed data for watershed # 1

Curve number	=	64.0
Area	=	3.4 acres
Hydraulic length	=	850.00 Feet
Elevation change	=	584.0 feet.
Concentration time	=	0.04 hours
Concentration time type	=	SCS Upland Curves
Unit hydrograph type	=	Forested

-- Total Area = 3.4 acres

-- Storm data

Total precipitation	=	1.6 inches
Storm type	=	SCS 6 hour design storm
Peak Discharge	=	0.06 cfs
Discharge volume	=	0.01 acre ft

Project Title = WEST RIDGE UA-9 (100/6)
WATERSHED HYDROGRAPH
Inflow into structure # 1
Structure type: Null

-- Watershed data for watershed # 1

Curve number	=	64.0
Area	=	3.4 acres
Hydraulic length	=	850.00 Feet
Elevation change	=	584.0 feet.
Concentration time	=	0.04 hours
Concentration time type	=	SCS Upland Curves
Unit hydrograph type	=	Forested

-- Total Area = 3.4 acres

-- Storm data

Total precipitation	=	2.0 inches
Storm type	=	SCS 6 hour design storm
Peak Discharge	=	0.12 cfs
Discharge volume	=	0.03 acre ft

```
Project Title          = WEST RIDGE UA-10a (10/6)
WATERSHED HYDROGRAPH
     Inflow into structure #  1
     Structure type:          Null


-- Watershed data for watershed # 1
    Curve number              =    74.0
    Area                      =     3.7 acres
    Hydraulic length          =  605.00 Feet
    Elevation change          =   528.0 feet.
    Concentration time        =    0.03 hours
    Concentration time type = SCS Upland Curves
    Unit hydrograph type      = Forested

-- Total Area            =     3.7 acres

-- Storm data
    Total precipitation  =     1.3 inches
    Storm type           = SCS 6 hour design storm
    Peak Discharge       =    0.10 cfs
    Discharge volume     =    0.03 acre ft
```

Project Title = WEST RIDGE UA-10a (10/24)
WATERSHED HYDROGRAPH
Inflow into structure # 1
Structure type: Null

-- Watershed data for watershed # 1

Curve number	=	74.0
Area	=	3.7 acres
Hydraulic length	=	605.00 Feet
Elevation change	=	528.0 feet.
Concentration time	=	0.03 hours
Concentration time type	=	SCS Upland Curves
Unit hydrograph type	=	Forested

-- Total Area = 3.7 acres

-- Storm data

Total precipitation	=	2.0 inches
Storm type	=	SCS Type 2 storm, 24 hour storm
Peak Discharge	=	0.78 cfs
Discharge volume	=	0.11 acre ft

Project Title = WEST RIDGE UA-10a (25/6)
WATERSHED HYDROGRAPH
Inflow into structure # 1
Structure type: Null

-- Watershed data for watershed # 1

Curve number	=	74.0
Area	=	3.7 acres
Hydraulic length	=	605.00 Feet
Elevation change	=	528.0 feet.
Concentration time	=	0.03 hours
Concentration time type	=	SCS Upland Curves
Unit hydrograph type	=	Forested

-- Total Area = 3.7 acres

-- Storm data

Total precipitation	=	1.6 inches
Storm type	=	SCS 6 hour design storm
Peak Discharge	=	0.21 cfs
Discharge volume	=	0.06 acre ft

Project Title = WEST RIDGE UA-10a (100/6)
WATERSHED HYDROGRAPH
Inflow into structure # 1
Structure type: Null

-- Watershed data for watershed # 1

Curve number	=	74.0
Area	=	3.7 acres
Hydraulic length	=	605.00 Feet
Elevation change	=	528.0 feet.
Concentration time	=	0.03 hours
Concentration time type	=	SCS Upland Curves
Unit hydrograph type	=	Forested

-- Total Area = 3.7 acres

-- Storm data

Total precipitation	=	2.0 inches
Storm type	=	SCS 6 hour design storm
Peak Discharge	=	0.58 cfs
Discharge volume	=	0.11 acre ft

```
Project Title          = WEST RIDGE UA-10b (10/6)
WATERSHED HYDROGRAPH
     Inflow into structure #  1
     Structure type:          Null


-- Watershed data for watershed # 1
    Curve number              =    80.0
    Area                      =     3.8 acres
    Hydraulic length          = 1282.00 Feet
    Elevation change          =   874.0 feet.
    Concentration time        =    0.06 hours
    Concentration time type = SCS Upland Curves
    Unit hydrograph type      = Forested

-- Total Area            =     3.8 acres

-- Storm data
    Total precipitation  =     1.3 inches
    Storm type           = SCS 6 hour design storm
    Peak Discharge       =    0.27 cfs
    Discharge volume     =    0.06 acre ft
```

Project Title = WEST RIDGE UA-10b (10/24)
WATERSHED HYDROGRAPH
Inflow into structure # 1
Structure type: Null

-- Watershed data for watershed # 1

Curve number	=	80.0
Area	=	3.8 acres
Hydraulic length	=	1282.00 Feet
Elevation change	=	874.0 feet.
Concentration time	=	0.06 hours
Concentration time type	=	SCS Upland Curves
Unit hydrograph type	=	Forested

-- Total Area = 3.8 acres

-- Storm data

Total precipitation	=	2.0 inches
Storm type	=	SCS Type 2 storm, 24 hour storm
Peak Discharge	=	1.42 cfs
Discharge volume	=	0.18 acre ft

```
Project Title          = WEST RIDGE UA-10b (25/6)
WATERSHED HYDROGRAPH
    Inflow into structure #  1
    Structure type:          Null


-- Watershed data for watershed # 1
    Curve number              =    80.0
    Area                      =     3.8 acres
    Hydraulic length          = 1282.00 Feet
    Elevation change          =   874.0 feet.
    Concentration time        =    0.06 hours
    Concentration time type = SCS Upland Curves
    Unit hydrograph type      = Forested

-- Total Area            =     3.8 acres

-- Storm data
    Total precipitation  =     1.6 inches
    Storm type           = SCS 6 hour design storm
    Peak Discharge       =    0.60 cfs
    Discharge volume     =    0.11 acre ft
```

```
Project Title          = WEST RIDGE UA-10b (100/6)
WATERSHED HYDROGRAPH
     Inflow into structure #  1
     Structure type:          Null


-- Watershed data for watershed # 1
    Curve number              =    80.0
    Area                      =     3.8 acres
    Hydraulic length          = 1282.00 Feet
    Elevation change          =   874.0 feet.
    Concentration time        =    0.06 hours
    Concentration time type = SCS Upland Curves
    Unit hydrograph type      = Forested

-- Total Area            =     3.8 acres

-- Storm data
    Total precipitation  =     2.0 inches
    Storm type           = SCS 6 hour design storm
    Peak Discharge       =    1.15 cfs
    Discharge volume     =    0.18 acre ft
```

Project Title = WEST RIDGE UA-10c (10/6)
WATERSHED HYDROGRAPH
Inflow into structure # 1
Structure type: Null

-- Watershed data for watershed # 1

Curve number	=	80.0
Area	=	1.5 acres
Hydraulic length	=	571.00 Feet
Elevation change	=	370.0 feet.
Concentration time	=	0.03 hours
Concentration time type	=	SCS Upland Curves
Unit hydrograph type	=	Forested

-- Total Area = 1.5 acres

-- Storm data

Total precipitation	=	1.3 inches
Storm type	=	SCS 6 hour design storm
Peak Discharge	=	0.11 cfs
Discharge volume	=	0.02 acre ft

Project Title = WEST RIDGE UA-10c (10/24)
WATERSHED HYDROGRAPH
Inflow into structure # 1
Structure type: Null

-- Watershed data for watershed # 1

Curve number	=	80.0
Area	=	1.5 acres
Hydraulic length	=	571.00 Feet
Elevation change	=	370.0 feet.
Concentration time	=	0.03 hours
Concentration time type	=	SCS Upland Curves
Unit hydrograph type	=	Forested

-- Total Area = 1.5 acres

-- Storm data

Total precipitation	=	2.0 inches
Storm type	=	SCS Type 2 storm, 24 hour storm
Peak Discharge	=	0.58 cfs
Discharge volume	=	0.07 acre ft

Project Title = WEST RIDGE UA-10c (25/6)
WATERSHED HYDROGRAPH
Inflow into structure # 1
Structure type: Null

-- Watershed data for watershed # 1

Curve number	=	80.0
Area	=	1.5 acres
Hydraulic length	=	571.00 Feet
Elevation change	=	370.0 feet.
Concentration time	=	0.03 hours
Concentration time type	=	SCS Upland Curves
Unit hydrograph type	=	Forested

-- Total Area = 1.5 acres

-- Storm data

Total precipitation	=	1.6 inches
Storm type	=	SCS 6 hour design storm
Peak Discharge	=	0.25 cfs
Discharge volume	=	0.04 acre ft

Project Title = WEST RIDGE UA-10c (100/6)
WATERSHED HYDROGRAPH
Inflow into structure # 1
Structure type: Null

-- Watershed data for watershed # 1

Curve number	=	80.0
Area	=	1.5 acres
Hydraulic length	=	571.00 Feet
Elevation change	=	370.0 feet.
Concentration time	=	0.03 hours
Concentration time type	=	SCS Upland Curves
Unit hydrograph type	=	Forested

-- Total Area = 1.5 acres

-- Storm data

Total precipitation	=	2.0 inches
Storm type	=	SCS 6 hour design storm
Peak Discharge	=	0.47 cfs
Discharge volume	=	0.07 acre ft

Project Title = WEST RIDGE UA-12 (10/6)
WATERSHED HYDROGRAPH
Inflow into structure # 1
Structure type: Null

-- Watershed data for watershed # 1

Curve number	=	80.0
Area	=	12.6 acres
Hydraulic length	=	1250.00 Feet
Elevation change	=	894.0 feet.
Concentration time	=	0.06 hours
Concentration time type	=	SCS Upland Curves
Unit hydrograph type	=	Forested

-- Total Area = 12.6 acres

-- Storm data

Total precipitation	=	1.3 inches
Storm type	=	SCS 6 hour design storm
Peak Discharge	=	0.88 cfs
Discharge volume	=	0.20 acre ft

Project Title = WEST RIDGE UA-12 (10/24)
WATERSHED HYDROGRAPH
Inflow into structure # 1
Structure type: Null

-- Watershed data for watershed # 1

Curve number	=	80.0
Area	=	12.6 acres
Hydraulic length	=	1250.00 Feet
Elevation change	=	894.0 feet.
Concentration time	=	0.06 hours
Concentration time type	=	SCS Upland Curves
Unit hydrograph type	=	Forested

-- Total Area = 12.6 acres

-- Storm data

Total precipitation	=	2.0 inches
Storm type	=	SCS Type 2 storm, 24 hour storm
Peak Discharge	=	4.65 cfs
Discharge volume	=	0.59 acre ft

Project Title = WEST RIDGE UA-12 (25/6)
WATERSHED HYDROGRAPH
Inflow into structure # 1
Structure type: Null

-- Watershed data for watershed # 1

Curve number	=	80.0
Area	=	12.6 acres
Hydraulic length	=	1250.00 Feet
Elevation change	=	894.0 feet.
Concentration time	=	0.06 hours
Concentration time type	=	SCS Upland Curves
Unit hydrograph type	=	Forested

-- Total Area = 12.6 acres

-- Storm data

Total precipitation	=	1.6 inches
Storm type	=	SCS 6 hour design storm
Peak Discharge	=	1.97 cfs
Discharge volume	=	0.35 acre ft

```
Project Title          = WEST RIDGE UA-12 (100/6)
WATERSHED HYDROGRAPH
     Inflow into structure #  1
     Structure type:          Null


-- Watershed data for watershed # 1
    Curve number              =    80.0
    Area                      =    12.6 acres
    Hydraulic length          = 1250.00 Feet
    Elevation change          =   894.0 feet.
    Concentration time        =    0.06 hours
    Concentration time type   = SCS Upland Curves
    Unit hydrograph type      = Forested

-- Total Area            =    12.6 acres

-- Storm data
    Total precipitation   =     2.0 inches
    Storm type            = SCS 6 hour design storm
    Peak Discharge        =    3.78 cfs
    Discharge volume      =    0.59 acre ft
```

Project Title = WEST RIDGE UA-14 (10/6)
WATERSHED HYDROGRAPH
Inflow into structure # 1
Structure type: Null

-- Watershed data for watershed # 1

Curve number	=	64.0
Area	=	4.3 acres
Hydraulic length	=	630.00 Feet
Elevation change	=	418.0 feet.
Concentration time	=	0.03 hours
Concentration time type	=	SCS Upland Curves
Unit hydrograph type	=	Forested

-- Total Area = 4.3 acres

-- Storm data

Total precipitation	=	1.3 inches
Storm type	=	SCS 6 hour design storm
Peak Discharge	=	0.02 cfs
Discharge volume	=	0.00 acre ft

Project Title = WEST RIDGE UA-14 (10/24)
WATERSHED HYDROGRAPH
Inflow into structure # 1
Structure type: Null

-- Watershed data for watershed # 1

Curve number	=	64.0
Area	=	4.3 acres
Hydraulic length	=	630.00 Feet
Elevation change	=	418.0 feet.
Concentration time	=	0.03 hours
Concentration time type	=	SCS Upland Curves
Unit hydrograph type	=	Forested

-- Total Area = 4.3 acres

-- Storm data

Total precipitation	=	2.0 inches
Storm type	=	SCS Type 2 storm, 24 hour storm
Peak Discharge	=	0.11 cfs
Discharge volume	=	0.04 acre ft

Project Title = WEST RIDGE UA-14 (25/6)
WATERSHED HYDROGRAPH
Inflow into structure # 1
Structure type: Null

-- Watershed data for watershed # 1

Curve number	=	64.0
Area	=	4.3 acres
Hydraulic length	=	630.00 Feet
Elevation change	=	418.0 feet.
Concentration time	=	0.03 hours
Concentration time type	=	SCS Upland Curves
Unit hydrograph type	=	Forested

-- Total Area = 4.3 acres

-- Storm data

Total precipitation	=	1.6 inches
Storm type	=	SCS 6 hour design storm
Peak Discharge	=	0.07 cfs
Discharge volume	=	0.01 acre ft

Project Title = WEST RIDGE UA-14 (100/6)
WATERSHED HYDROGRAPH
Inflow into structure # 1
Structure type: Null

-- Watershed data for watershed # 1

Curve number	=	64.0
Area	=	4.3 acres
Hydraulic length	=	630.00 Feet
Elevation change	=	418.0 feet.
Concentration time	=	0.03 hours
Concentration time type	=	SCS Upland Curves
Unit hydrograph type	=	Forested

-- Total Area = 4.3 acres

-- Storm data

Total precipitation	=	2.0 inches
Storm type	=	SCS 6 hour design storm
Peak Discharge	=	0.15 cfs
Discharge volume	=	0.04 acre ft

Project Title = WEST RIDGE UA-15 (10/6)
WATERSHED HYDROGRAPH
Inflow into structure # 1
Structure type: Null

-- Watershed data for watershed # 1

Curve number	=	80.0
Area	=	5.1 acres
Hydraulic length	=	580.00 Feet
Elevation change	=	472.0 feet.
Concentration time	=	0.03 hours
Concentration time type	=	SCS Upland Curves
Unit hydrograph type	=	Forested

-- Total Area = 5.1 acres

-- Storm data

Total precipitation	=	1.3 inches
Storm type	=	SCS 6 hour design storm
Peak Discharge	=	0.39 cfs
Discharge volume	=	0.08 acre ft

```
Project Title          = WEST RIDGE UA-15 (10/24)
WATERSHED HYDROGRAPH
    Inflow into structure #  1
    Structure type:          Null


-- Watershed data for watershed # 1
    Curve number              =    80.0
    Area                      =     5.1 acres
    Hydraulic length          =  580.00 Feet
    Elevation change          =   472.0 feet.
    Concentration time        =    0.03 hours
    Concentration time type = SCS Upland Curves
    Unit hydrograph type      = Forested

-- Total Area            =     5.1 acres

-- Storm data
    Total precipitation  =     2.0 inches
    Storm type           = SCS Type 2 storm, 24 hour storm
    Peak Discharge       =    1.97 cfs
    Discharge volume     =    0.24 acre ft
```

```
Project Title          = WEST RIDGE UA-15 (25/6)
WATERSHED HYDROGRAPH
     Inflow into structure #  1
     Structure type:          Null


-- Watershed data for watershed # 1
     Curve number              =    80.0
     Area                      =     5.1 acres
     Hydraulic length          =  580.00 Feet
     Elevation change          =   472.0 feet.
     Concentration time        =    0.03 hours
     Concentration time type = SCS Upland Curves
     Unit hydrograph type      = Forested

-- Total Area            =     5.1 acres

-- Storm data
     Total precipitation  =     1.6 inches
     Storm type           = SCS 6 hour design storm
     Peak Discharge       =    0.85 cfs
     Discharge volume     =    0.14 acre ft
```

Project Title = WEST RIDGE UA-15 (100/6)
WATERSHED HYDROGRAPH
Inflow into structure # 1
Structure type: Null

-- Watershed data for watershed # 1

Curve number	=	80.0
Area	=	5.1 acres
Hydraulic length	=	580.00 Feet
Elevation change	=	472.0 feet.
Concentration time	=	0.03 hours
Concentration time type	=	SCS Upland Curves
Unit hydrograph type	=	Forested

-- Total Area = 5.1 acres

-- Storm data

Total precipitation	=	2.0 inches
Storm type	=	SCS 6 hour design storm
Peak Discharge	=	1.61 cfs
Discharge volume	=	0.24 acre ft

Project Title = WEST RIDGE UA-16 (10/6)
WATERSHED HYDROGRAPH
Inflow into structure # 1
Structure type: Null

-- Watershed data for watershed # 1

Curve number	=	64.0
Area	=	0.5 acres
Hydraulic length	=	340.00 Feet
Elevation change	=	272.0 feet.
Concentration time	=	0.02 hours
Concentration time type	=	SCS Upland Curves
Unit hydrograph type	=	Forested

-- Total Area = 0.5 acres

-- Storm data

Total precipitation	=	1.3 inches
Storm type	=	SCS 6 hour design storm
Peak Discharge	=	0.00 cfs
Discharge volume	=	0.00 acre ft

Project Title = WEST RIDGE UA-16 (10/24)
WATERSHED HYDROGRAPH
Inflow into structure # 1
Structure type: Null

-- Watershed data for watershed # 1

Curve number	=	64.0
Area	=	0.5 acres
Hydraulic length	=	340.00 Feet
Elevation change	=	272.0 feet.
Concentration time	=	0.02 hours
Concentration time type	=	SCS Upland Curves
Unit hydrograph type	=	Forested

-- Total Area = 0.5 acres

-- Storm data

Total precipitation	=	2.0 inches
Storm type	=	SCS Type 2 storm, 24 hour storm
Peak Discharge	=	0.01 cfs
Discharge volume	=	0.01 acre ft

Project Title = WEST RIDGE UA-16 (25/6)
WATERSHED HYDROGRAPH
Inflow into structure # 1
Structure type: Null

-- Watershed data for watershed # 1

Curve number	=	64.0
Area	=	0.5 acres
Hydraulic length	=	340.00 Feet
Elevation change	=	272.0 feet.
Concentration time	=	0.02 hours
Concentration time type	=	SCS Upland Curves
Unit hydrograph type	=	Forested

-- Total Area = 0.5 acres

-- Storm data

Total precipitation	=	1.6 inches
Storm type	=	SCS 6 hour design storm
Peak Discharge	=	0.01 cfs
Discharge volume	=	0.00 acre ft

Project Title = WEST RIDGE UA-16 (100/6)
WATERSHED HYDROGRAPH
Inflow into structure # 1
Structure type: Null

-- Watershed data for watershed # 1

Curve number	=	64.0
Area	=	0.5 acres
Hydraulic length	=	340.00 Feet
Elevation change	=	272.0 feet.
Concentration time	=	0.02 hours
Concentration time type	=	SCS Upland Curves
Unit hydrograph type	=	Forested

-- Total Area = 0.5 acres

-- Storm data

Total precipitation	=	2.0 inches
Storm type	=	SCS 6 hour design storm
Peak Discharge	=	0.02 cfs
Discharge volume	=	0.01 acre ft

Project Title = WEST RIDGE DA-1 (10/6)
WATERSHED HYDROGRAPH
Inflow into structure # 1
Structure type: Null

-- Watershed data for watershed # 1

Curve number	=	90.0
Area	=	1.8 acres
Hydraulic length	=	362.70 Feet
Elevation change	=	36.0 feet.
Concentration time	=	0.03 hours
Concentration time type	=	SCS Upland Curves
Unit hydrograph type	=	Disturbed

-- Total Area = 1.8 acres

-- Storm data

Total precipitation	=	1.3 inches
Storm type	=	SCS 6 hour design storm
Peak Discharge	=	0.77 cfs
Discharge volume	=	0.08 acre ft

Project Title = WEST RIDGE DA-1 (10/24)
WATERSHED HYDROGRAPH
Inflow into structure # 1
Structure type: Null

-- Watershed data for watershed # 1

Curve number	=	90.0
Area	=	1.8 acres
Hydraulic length	=	362.70 Feet
Elevation change	=	36.0 feet.
Concentration time	=	0.03 hours
Concentration time type	=	SCS Upland Curves
Unit hydrograph type	=	Disturbed

-- Total Area = 1.8 acres

-- Storm data

Total precipitation	=	2.0 inches
Storm type	=	SCS Type 2 storm, 24 hour storm
Peak Discharge	=	1.69 cfs
Discharge volume	=	0.17 acre ft

Project Title = WEST RIDGE DA-1 (25/6)
WATERSHED HYDROGRAPH
Inflow into structure # 1
Structure type: Null

-- Watershed data for watershed # 1

Curve number	=	90.0
Area	=	1.8 acres
Hydraulic length	=	362.70 Feet
Elevation change	=	36.0 feet.
Concentration time	=	0.03 hours
Concentration time type	=	SCS Upland Curves
Unit hydrograph type	=	Disturbed

-- Total Area = 1.8 acres

-- Storm data

Total precipitation	=	1.6 inches
Storm type	=	SCS 6 hour design storm
Peak Discharge	=	1.11 cfs
Discharge volume	=	0.12 acre ft

Project Title = WEST RIDGE DA-1 (100/6)
WATERSHED HYDROGRAPH
Inflow into structure # 1
Structure type: Null

-- Watershed data for watershed # 1

Curve number	=	90.0
Area	=	1.8 acres
Hydraulic length	=	362.70 Feet
Elevation change	=	36.0 feet.
Concentration time	=	0.03 hours
Concentration time type	=	SCS Upland Curves
Unit hydrograph type	=	Disturbed

-- Total Area = 1.8 acres

-- Storm data

Total precipitation	=	2.0 inches
Storm type	=	SCS 6 hour design storm
Peak Discharge	=	1.57 cfs
Discharge volume	=	0.17 acre ft

Project Title = WEST RIDGE DA-2 (10/6)
WATERSHED HYDROGRAPH
Inflow into structure # 1
Structure type: Null

-- Watershed data for watershed # 1

Curve number	=	90.0
Area	=	1.4 acres
Hydraulic length	=	273.10 Feet
Elevation change	=	8.0 feet.
Concentration time	=	0.04 hours
Concentration time type	=	SCS Upland Curves
Unit hydrograph type	=	Disturbed

-- Total Area = 1.4 acres

-- Storm data

Total precipitation	=	1.3 inches
Storm type	=	SCS 6 hour design storm
Peak Discharge	=	0.66 cfs
Discharge volume	=	0.06 acre ft

Project Title = WEST RIDGE DA-2 (10/24)
WATERSHED HYDROGRAPH
Inflow into structure # 1
Structure type: Null

-- Watershed data for watershed # 1

Curve number	=	90.0
Area	=	1.4 acres
Hydraulic length	=	273.10 Feet
Elevation change	=	8.0 feet.
Concentration time	=	0.04 hours
Concentration time type	=	SCS Upland Curves
Unit hydrograph type	=	Disturbed

-- Total Area = 1.4 acres

-- Storm data

Total precipitation	=	2.0 inches
Storm type	=	SCS Type 2 storm, 24 hour storm
Peak Discharge	=	1.46 cfs
Discharge volume	=	0.13 acre ft

Project Title = WEST RIDGE DA-2 (25/6)
WATERSHED HYDROGRAPH
Inflow into structure # 1
Structure type: Null

-- Watershed data for watershed # 1

Curve number	=	90.0
Area	=	1.4 acres
Hydraulic length	=	273.10 Feet
Elevation change	=	8.0 feet.
Concentration time	=	0.04 hours
Concentration time type	=	SCS Upland Curves
Unit hydrograph type	=	Disturbed

-- Total Area = 1.4 acres

-- Storm data

Total precipitation	=	1.6 inches
Storm type	=	SCS 6 hour design storm
Peak Discharge	=	0.95 cfs
Discharge volume	=	0.09 acre ft

Project Title = WEST RIDGE DA-2 (100/6)
WATERSHED HYDROGRAPH
Inflow into structure # 1
Structure type: Null

-- Watershed data for watershed # 1

Curve number	=	90.0
Area	=	1.4 acres
Hydraulic length	=	273.10 Feet
Elevation change	=	8.0 feet.
Concentration time	=	0.04 hours
Concentration time type	=	SCS Upland Curves
Unit hydrograph type	=	Disturbed

-- Total Area = 1.4 acres

-- Storm data

Total precipitation	=	2.0 inches
Storm type	=	SCS 6 hour design storm
Peak Discharge	=	1.36 cfs
Discharge volume	=	0.13 acre ft

Project Title = WEST RIDGE DA-3 (10/6)
WATERSHED HYDROGRAPH
Inflow into structure # 1
Structure type: Null

-- Watershed data for watershed # 1

Curve number	=	90.0
Area	=	1.3 acres
Hydraulic length	=	955.50 Feet
Elevation change	=	44.0 feet.
Concentration time	=	0.12 hours
Concentration time type	=	SCS Upland Curves
Unit hydrograph type	=	Disturbed

-- Total Area = 1.3 acres

-- Storm data

Total precipitation	=	1.3 inches
Storm type	=	SCS 6 hour design storm
Peak Discharge	=	0.60 cfs
Discharge volume	=	0.06 acre ft

Project Title = WEST RIDGE DA-3 (10/24)
WATERSHED HYDROGRAPH
Inflow into structure # 1
Structure type: Null

-- Watershed data for watershed # 1

Curve number	=	90.0
Area	=	1.3 acres
Hydraulic length	=	955.50 Feet
Elevation change	=	44.0 feet.
Concentration time	=	0.12 hours
Concentration time type	=	SCS Upland Curves
Unit hydrograph type	=	Disturbed

-- Total Area = 1.3 acres

-- Storm data

Total precipitation	=	2.0 inches
Storm type	=	SCS Type 2 storm, 24 hour storm
Peak Discharge	=	1.37 cfs
Discharge volume	=	0.12 acre ft

Project Title = WEST RIDGE DA-3 (25/6)
WATERSHED HYDROGRAPH
Inflow into structure # 1
Structure type: Null

-- Watershed data for watershed # 1

Curve number	=	90.0
Area	=	1.3 acres
Hydraulic length	=	955.50 Feet
Elevation change	=	44.0 feet.
Concentration time	=	0.12 hours
Concentration time type	=	SCS Upland Curves
Unit hydrograph type	=	Disturbed

-- Total Area = 1.3 acres

-- Storm data

Total precipitation	=	1.6 inches
Storm type	=	SCS 6 hour design storm
Peak Discharge	=	0.87 cfs
Discharge volume	=	0.08 acre ft

Project Title = WEST RIDGE DA-3 (100/6)
WATERSHED HYDROGRAPH
Inflow into structure # 1
Structure type: Null

-- Watershed data for watershed # 1

Curve number	=	90.0
Area	=	1.3 acres
Hydraulic length	=	955.50 Feet
Elevation change	=	44.0 feet.
Concentration time	=	0.12 hours
Concentration time type	=	SCS Upland Curves
Unit hydrograph type	=	Disturbed

-- Total Area = 1.3 acres

-- Storm data

Total precipitation	=	2.0 inches
Storm type	=	SCS 6 hour design storm
Peak Discharge	=	1.26 cfs
Discharge volume	=	0.12 acre ft

Project Title = WEST RIDGE DA-4 (10/6)
WATERSHED HYDROGRAPH
Inflow into structure # 1
Structure type: Null

-- Watershed data for watershed # 1

Curve number	=	90.0
Area	=	1.4 acres
Hydraulic length	=	505.40 Feet
Elevation change	=	30.0 feet.
Concentration time	=	0.06 hours
Concentration time type	=	SCS Upland Curves
Unit hydrograph type	=	Disturbed

-- Total Area = 1.4 acres

-- Storm data

Total precipitation	=	1.3 inches
Storm type	=	SCS 6 hour design storm
Peak Discharge	=	0.68 cfs
Discharge volume	=	0.06 acre ft

Project Title = WEST RIDGE DA-4 (10/24)
WATERSHED HYDROGRAPH
Inflow into structure # 1
Structure type: Null

-- Watershed data for watershed # 1

Curve number	=	90.0
Area	=	1.4 acres
Hydraulic length	=	505.40 Feet
Elevation change	=	30.0 feet.
Concentration time	=	0.06 hours
Concentration time type	=	SCS Upland Curves
Unit hydrograph type	=	Disturbed

-- Total Area = 1.4 acres

-- Storm data

Total precipitation	=	2.0 inches
Storm type	=	SCS Type 2 storm, 24 hour storm
Peak Discharge	=	1.50 cfs
Discharge volume	=	0.13 acre ft

Project Title = WEST RIDGE DA-4 (25/6)
WATERSHED HYDROGRAPH
Inflow into structure # 1
Structure type: Null

-- Watershed data for watershed # 1

Curve number	=	90.0
Area	=	1.4 acres
Hydraulic length	=	505.40 Feet
Elevation change	=	30.0 feet.
Concentration time	=	0.06 hours
Concentration time type	=	SCS Upland Curves
Unit hydrograph type	=	Disturbed

-- Total Area = 1.4 acres

-- Storm data

Total precipitation	=	1.6 inches
Storm type	=	SCS 6 hour design storm
Peak Discharge	=	0.98 cfs
Discharge volume	=	0.09 acre ft

Project Title = WEST RIDGE DA-4 (100/6)
WATERSHED HYDROGRAPH
Inflow into structure # 1
Structure type: Null

-- Watershed data for watershed # 1

Curve number	=	90.0
Area	=	1.4 acres
Hydraulic length	=	505.40 Feet
Elevation change	=	30.0 feet.
Concentration time	=	0.06 hours
Concentration time type	=	SCS Upland Curves
Unit hydrograph type	=	Disturbed

-- Total Area = 1.4 acres

-- Storm data

Total precipitation	=	2.0 inches
Storm type	=	SCS 6 hour design storm
Peak Discharge	=	1.39 cfs
Discharge volume	=	0.13 acre ft

Project Title = WEST RIDGE DA-4a (10/6)
WATERSHED HYDROGRAPH
Inflow into structure # 1
Structure type: Null

-- Watershed data for watershed # 1

Curve number	=	90.0
Area	=	1.4 acres
Hydraulic length	=	436.60 Feet
Elevation change	=	26.0 feet.
Concentration time	=	0.05 hours
Concentration time type	=	SCS Upland Curves
Unit hydrograph type	=	Disturbed

-- Total Area = 1.4 acres

-- Storm data

Total precipitation	=	1.3 inches
Storm type	=	SCS 6 hour design storm
Peak Discharge	=	0.67 cfs
Discharge volume	=	0.06 acre ft

Project Title = WEST RIDGE DA-4a (10/24)
WATERSHED HYDROGRAPH
Inflow into structure # 1
Structure type: Null

-- Watershed data for watershed # 1

Curve number	=	90.0
Area	=	1.4 acres
Hydraulic length	=	436.60 Feet
Elevation change	=	26.0 feet.
Concentration time	=	0.05 hours
Concentration time type	=	SCS Upland Curves
Unit hydrograph type	=	Disturbed

-- Total Area = 1.4 acres

-- Storm data

Total precipitation	=	2.0 inches
Storm type	=	SCS Type 2 storm, 24 hour storm
Peak Discharge	=	1.47 cfs
Discharge volume	=	0.13 acre ft

Project Title = WEST RIDGE DA-4a (25/6)
WATERSHED HYDROGRAPH
Inflow into structure # 1
Structure type: Null

-- Watershed data for watershed # 1

Curve number	=	90.0
Area	=	1.4 acres
Hydraulic length	=	436.60 Feet
Elevation change	=	26.0 feet.
Concentration time	=	0.05 hours
Concentration time type	=	SCS Upland Curves
Unit hydrograph type	=	Disturbed

-- Total Area = 1.4 acres

-- Storm data

Total precipitation	=	1.6 inches
Storm type	=	SCS 6 hour design storm
Peak Discharge	=	0.96 cfs
Discharge volume	=	0.09 acre ft

Project Title = WEST RIDGE DA-4a (100/6)
WATERSHED HYDROGRAPH
Inflow into structure # 1
Structure type: Null

-- Watershed data for watershed # 1

Curve number	=	90.0
Area	=	1.4 acres
Hydraulic length	=	436.60 Feet
Elevation change	=	26.0 feet.
Concentration time	=	0.05 hours
Concentration time type	=	SCS Upland Curves
Unit hydrograph type	=	Disturbed

-- Total Area = 1.4 acres

-- Storm data

Total precipitation	=	2.0 inches
Storm type	=	SCS 6 hour design storm
Peak Discharge	=	1.37 cfs
Discharge volume	=	0.13 acre ft

Project Title = WEST RIDGE DA-5 (10/6)
WATERSHED HYDROGRAPH
Inflow into structure # 1
Structure type: Null

-- Watershed data for watershed # 1

Curve number	=	90.0
Area	=	2.0 acres
Hydraulic length	=	186.00 Feet
Elevation change	=	64.0 feet.
Concentration time	=	0.01 hours
Concentration time type	=	SCS Upland Curves
Unit hydrograph type	=	Disturbed

-- Total Area = 2.0 acres

-- Storm data

Total precipitation	=	1.3 inches
Storm type	=	SCS 6 hour design storm
Peak Discharge	=	0.56 cfs
Discharge volume	=	0.09 acre ft

```
Project Title          = WEST RIDGE DA-5 (10/24)
WATERSHED HYDROGRAPH
    Inflow into structure #  1
    Structure type:          Null


-- Watershed data for watershed # 1
    Curve number              =    90.0
    Area                      =     2.0 acres
    Hydraulic length          =  186.00 Feet
    Elevation change          =    64.0 feet.
    Concentration time        =    0.01 hours
    Concentration time type = SCS Upland Curves
    Unit hydrograph type      = Disturbed

-- Total Area            =     2.0 acres

-- Storm data
    Total precipitation  =     2.0 inches
    Storm type           = SCS Type 2 storm, 24 hour storm
    Peak Discharge       =    1.22 cfs
    Discharge volume     =    0.18 acre ft
```

Project Title = WEST RIDGE DA-5 (25/6)
WATERSHED HYDROGRAPH
Inflow into structure # 1
Structure type: Null

-- Watershed data for watershed # 1

Curve number	=	90.0
Area	=	2.0 acres
Hydraulic length	=	186.00 Feet
Elevation change	=	64.0 feet.
Concentration time	=	0.01 hours
Concentration time type	=	SCS Upland Curves
Unit hydrograph type	=	Disturbed

-- Total Area = 2.0 acres

-- Storm data

Total precipitation	=	1.6 inches
Storm type	=	SCS 6 hour design storm
Peak Discharge	=	0.80 cfs
Discharge volume	=	0.12 acre ft

Project Title = WEST RIDGE DA-5 (100/6)
WATERSHED HYDROGRAPH
Inflow into structure # 1
Structure type: Null

-- Watershed data for watershed # 1

Curve number	=	90.0
Area	=	2.0 acres
Hydraulic length	=	186.00 Feet
Elevation change	=	64.0 feet.
Concentration time	=	0.01 hours
Concentration time type	=	SCS Upland Curves
Unit hydrograph type	=	Disturbed

-- Total Area = 2.0 acres

-- Storm data

Total precipitation	=	2.0 inches
Storm type	=	SCS 6 hour design storm
Peak Discharge	=	1.14 cfs
Discharge volume	=	0.18 acre ft

Project Title = WEST RIDGE DA-6 (10/6)
WATERSHED HYDROGRAPH
Inflow into structure # 1
Structure type: Null

-- Watershed data for watershed # 1

Curve number	=	90.0
Area	=	0.8 acres
Hydraulic length	=	287.60 Feet
Elevation change	=	82.0 feet.
Concentration time	=	0.01 hours
Concentration time type	=	SCS Upland Curves
Unit hydrograph type	=	Disturbed

-- Total Area = 0.8 acres

-- Storm data

Total precipitation	=	1.3 inches
Storm type	=	SCS 6 hour design storm
Peak Discharge	=	0.28 cfs
Discharge volume	=	0.04 acre ft

```
Project Title          = WEST RIDGE DA-6 (10/24)
WATERSHED HYDROGRAPH
    Inflow into structure #  1
    Structure type:          Null


-- Watershed data for watershed # 1
    Curve number              =    90.0
    Area                      =     0.8 acres
    Hydraulic length          =  287.60 Feet
    Elevation change          =    82.0 feet.
    Concentration time        =    0.01 hours
    Concentration time type = SCS Upland Curves
    Unit hydrograph type      = Disturbed

-- Total Area            =     0.8 acres

-- Storm data
    Total precipitation  =     2.0 inches
    Storm type           = SCS Type 2 storm, 24 hour storm
    Peak Discharge       =    0.61 cfs
    Discharge volume     =    0.07 acre ft
```

```
Project Title          = WEST RIDGE DA-6 (25/6)
WATERSHED HYDROGRAPH
     Inflow into structure #  1
     Structure type:          Null


-- Watershed data for watershed # 1
     Curve number              =    90.0
     Area                      =     0.8 acres
     Hydraulic length          =  287.60 Feet
     Elevation change          =    82.0 feet.
     Concentration time        =    0.01 hours
     Concentration time type = SCS Upland Curves
     Unit hydrograph type      = Disturbed

-- Total Area            =     0.8 acres

-- Storm data
     Total precipitation  =     1.6 inches
     Storm type           = SCS 6 hour design storm
     Peak Discharge       =    0.40 cfs
     Discharge volume     =    0.05 acre ft
```

Project Title = WEST RIDGE DA-6 (100/6)
WATERSHED HYDROGRAPH
Inflow into structure # 1
Structure type: Null

-- Watershed data for watershed # 1

Curve number	=	90.0
Area	=	0.8 acres
Hydraulic length	=	287.60 Feet
Elevation change	=	82.0 feet.
Concentration time	=	0.01 hours
Concentration time type	=	SCS Upland Curves
Unit hydrograph type	=	Disturbed

-- Total Area = 0.8 acres

-- Storm data

Total precipitation	=	2.0 inches
Storm type	=	SCS 6 hour design storm
Peak Discharge	=	0.56 cfs
Discharge volume	=	0.07 acre ft

Project Title = WEST RIDGE DA-7 (10/6)
WATERSHED HYDROGRAPH
Inflow into structure # 1
Structure type: Null

-- Watershed data for watershed # 1

Curve number	=	90.0
Area	=	1.0 acres
Hydraulic length	=	283.30 Feet
Elevation change	=	36.0 feet.
Concentration time	=	0.02 hours
Concentration time type	=	SCS Upland Curves
Unit hydrograph type	=	Disturbed

-- Total Area = 1.0 acres

-- Storm data

Total precipitation	=	1.3 inches
Storm type	=	SCS 6 hour design storm
Peak Discharge	=	0.38 cfs
Discharge volume	=	0.04 acre ft

Project Title = WEST RIDGE DA-7 (10/24)
WATERSHED HYDROGRAPH
Inflow into structure # 1
Structure type: Null

-- Watershed data for watershed # 1

Curve number	=	90.0
Area	=	1.0 acres
Hydraulic length	=	283.30 Feet
Elevation change	=	36.0 feet.
Concentration time	=	0.02 hours
Concentration time type	=	SCS Upland Curves
Unit hydrograph type	=	Disturbed

-- Total Area = 1.0 acres

-- Storm data

Total precipitation	=	2.0 inches
Storm type	=	SCS Type 2 storm, 24 hour storm
Peak Discharge	=	0.84 cfs
Discharge volume	=	0.09 acre ft

Project Title = WEST RIDGE DA-7 (25/6)
WATERSHED HYDROGRAPH
Inflow into structure # 1
Structure type: Null

-- Watershed data for watershed # 1

Curve number	=	90.0
Area	=	1.0 acres
Hydraulic length	=	283.30 Feet
Elevation change	=	36.0 feet.
Concentration time	=	0.02 hours
Concentration time type	=	SCS Upland Curves
Unit hydrograph type	=	Disturbed

-- Total Area = 1.0 acres

-- Storm data

Total precipitation	=	1.6 inches
Storm type	=	SCS 6 hour design storm
Peak Discharge	=	0.55 cfs
Discharge volume	=	0.06 acre ft

Project Title = WEST RIDGE DA-7 (100/6)
WATERSHED HYDROGRAPH
Inflow into structure # 1
Structure type: Null

-- Watershed data for watershed # 1

Curve number	=	90.0
Area	=	1.0 acres
Hydraulic length	=	283.30 Feet
Elevation change	=	36.0 feet.
Concentration time	=	0.02 hours
Concentration time type	=	SCS Upland Curves
Unit hydrograph type	=	Disturbed

-- Total Area = 1.0 acres

-- Storm data

Total precipitation	=	2.0 inches
Storm type	=	SCS 6 hour design storm
Peak Discharge	=	0.78 cfs
Discharge volume	=	0.09 acre ft

Project Title = WEST RIDGE DA-8 (10/6)
WATERSHED HYDROGRAPH
Inflow into structure # 1
Structure type: Null

-- Watershed data for watershed # 1

Curve number	=	90.0
Area	=	1.5 acres
Hydraulic length	=	437.40 Feet
Elevation change	=	78.0 feet.
Concentration time	=	0.03 hours
Concentration time type	=	SCS Upland Curves
Unit hydrograph type	=	Disturbed

-- Total Area = 1.5 acres

-- Storm data

Total precipitation	=	1.3 inches
Storm type	=	SCS 6 hour design storm
Peak Discharge	=	0.62 cfs
Discharge volume	=	0.07 acre ft

Project Title = WEST RIDGE DA-8 (10/24)
WATERSHED HYDROGRAPH
Inflow into structure # 1
Structure type: Null

-- Watershed data for watershed # 1

Curve number	=	90.0
Area	=	1.5 acres
Hydraulic length	=	437.40 Feet
Elevation change	=	78.0 feet.
Concentration time	=	0.03 hours
Concentration time type	=	SCS Upland Curves
Unit hydrograph type	=	Disturbed

-- Total Area = 1.5 acres

-- Storm data

Total precipitation	=	2.0 inches
Storm type	=	SCS Type 2 storm, 24 hour storm
Peak Discharge	=	1.37 cfs
Discharge volume	=	0.14 acre ft

```
Project Title          = WEST RIDGE DA-8 (25/6)
WATERSHED HYDROGRAPH
    Inflow into structure #  1
    Structure type:          Null


-- Watershed data for watershed # 1
    Curve number              =    90.0
    Area                      =     1.5 acres
    Hydraulic length          =  437.40 Feet
    Elevation change          =    78.0 feet.
    Concentration time        =    0.03 hours
    Concentration time type = SCS Upland Curves
    Unit hydrograph type    = Disturbed

-- Total Area            =     1.5 acres

-- Storm data
    Total precipitation  =     1.6 inches
    Storm type           = SCS 6 hour design storm
    Peak Discharge       =    0.89 cfs
    Discharge volume     =    0.10 acre ft
```

```
Project Title          = WEST RIDGE DA-8 (100/6)
WATERSHED HYDROGRAPH
    Inflow into structure #  1
    Structure type:          Null


-- Watershed data for watershed # 1
    Curve number              =    90.0
    Area                      =     1.5 acres
    Hydraulic length          =  437.40 Feet
    Elevation change          =    78.0 feet.
    Concentration time        =    0.03 hours
    Concentration time type = SCS Upland Curves
    Unit hydrograph type      = Disturbed

-- Total Area            =     1.5 acres

-- Storm data
    Total precipitation  =     2.0 inches
    Storm type           = SCS 6 hour design storm
    Peak Discharge       =    1.27 cfs
    Discharge volume     =    0.14 acre ft
```

Project Title = WEST RIDGE DA-9 (10/6)
WATERSHED HYDROGRAPH
Inflow into structure # 1
Structure type: Null

-- Watershed data for watershed # 1

Curve number	=	90.0
Area	=	1.8 acres
Hydraulic length	=	524.00 Feet
Elevation change	=	34.0 feet.
Concentration time	=	0.06 hours
Concentration time type	=	SCS Upland Curves
Unit hydrograph type	=	Disturbed

-- Total Area = 1.8 acres

-- Storm data

Total precipitation	=	1.3 inches
Storm type	=	SCS 6 hour design storm
Peak Discharge	=	0.85 cfs
Discharge volume	=	0.08 acre ft

Project Title = WEST RIDGE DA-9 (10/24)
WATERSHED HYDROGRAPH
Inflow into structure # 1
Structure type: Null

-- Watershed data for watershed # 1

Curve number	=	90.0
Area	=	1.8 acres
Hydraulic length	=	524.00 Feet
Elevation change	=	34.0 feet.
Concentration time	=	0.06 hours
Concentration time type	=	SCS Upland Curves
Unit hydrograph type	=	Disturbed

-- Total Area = 1.8 acres

-- Storm data

Total precipitation	=	2.0 inches
Storm type	=	SCS Type 2 storm, 24 hour storm
Peak Discharge	=	1.87 cfs
Discharge volume	=	0.16 acre ft

Project Title = WEST RIDGE DA-9 (25/6)
WATERSHED HYDROGRAPH
Inflow into structure # 1
Structure type: Null

-- Watershed data for watershed # 1

Curve number	=	90.0
Area	=	1.8 acres
Hydraulic length	=	524.00 Feet
Elevation change	=	34.0 feet.
Concentration time	=	0.06 hours
Concentration time type	=	SCS Upland Curves
Unit hydrograph type	=	Disturbed

-- Total Area = 1.8 acres

-- Storm data

Total precipitation	=	1.6 inches
Storm type	=	SCS 6 hour design storm
Peak Discharge	=	1.22 cfs
Discharge volume	=	0.11 acre ft

```
Project Title          = WEST RIDGE DA-9 (100/6)
WATERSHED HYDROGRAPH
     Inflow into structure #  1
     Structure type:          Null


-- Watershed data for watershed # 1
    Curve number              =    90.0
    Area                      =     1.8 acres
    Hydraulic length          =  524.00 Feet
    Elevation change          =    34.0 feet.
    Concentration time        =    0.06 hours
    Concentration time type = SCS Upland Curves
    Unit hydrograph type      = Disturbed

-- Total Area            =     1.8 acres

-- Storm data
    Total precipitation  =     2.0 inches
    Storm type           = SCS 6 hour design storm
    Peak Discharge       =    1.74 cfs
    Discharge volume     =    0.16 acre ft
```

Project Title = WEST RIDGE DA-10 (10/6)
WATERSHED HYDROGRAPH
Inflow into structure # 1
Structure type: Null

-- Watershed data for watershed # 1

Curve number	=	90.0
Area	=	4.3 acres
Hydraulic length	=	831.80 Feet
Elevation change	=	72.0 feet.
Concentration time	=	0.08 hours
Concentration time type	=	SCS Upland Curves
Unit hydrograph type	=	Disturbed

-- Total Area = 4.3 acres

-- Storm data

Total precipitation	=	1.3 inches
Storm type	=	SCS 6 hour design storm
Peak Discharge	=	2.10 cfs
Discharge volume	=	0.19 acre ft

```
Project Title          = WEST RIDGE DA-10 (10/24)
WATERSHED HYDROGRAPH
    Inflow into structure #  1
    Structure type:          Null


-- Watershed data for watershed # 1
    Curve number              =    90.0
    Area                      =     4.3 acres
    Hydraulic length          =  831.80 Feet
    Elevation change          =    72.0 feet.
    Concentration time        =    0.08 hours
    Concentration time type = SCS Upland Curves
    Unit hydrograph type    = Disturbed

-- Total Area            =     4.3 acres

-- Storm data
    Total precipitation  =     2.0 inches
    Storm type           = SCS Type 2 storm, 24 hour storm
    Peak Discharge       =    4.66 cfs
    Discharge volume     =    0.39 acre ft
```

Project Title = WEST RIDGE DA-10 (25/6)
WATERSHED HYDROGRAPH
Inflow into structure # 1
Structure type: Null

-- Watershed data for watershed # 1

Curve number	=	90.0
Area	=	4.3 acres
Hydraulic length	=	831.80 Feet
Elevation change	=	72.0 feet.
Concentration time	=	0.08 hours
Concentration time type	=	SCS Upland Curves
Unit hydrograph type	=	Disturbed

-- Total Area = 4.3 acres

-- Storm data

Total precipitation	=	1.6 inches
Storm type	=	SCS 6 hour design storm
Peak Discharge	=	3.03 cfs
Discharge volume	=	0.27 acre ft

Project Title = WEST RIDGE DA-10 (100/6)
WATERSHED HYDROGRAPH
Inflow into structure # 1
Structure type: Null

-- Watershed data for watershed # 1

Curve number	=	90.0
Area	=	4.3 acres
Hydraulic length	=	831.80 Feet
Elevation change	=	72.0 feet.
Concentration time	=	0.08 hours
Concentration time type	=	SCS Upland Curves
Unit hydrograph type	=	Disturbed

-- Total Area = 4.3 acres

-- Storm data

Total precipitation	=	2.0 inches
Storm type	=	SCS 6 hour design storm
Peak Discharge	=	4.32 cfs
Discharge volume	=	0.39 acre ft

Project Title = WEST RIDGE DA-11 (10/6)
WATERSHED HYDROGRAPH
Inflow into structure # 1
Structure type: Null

-- Watershed data for watershed # 1

Curve number	=	90.0
Area	=	0.6 acres
Hydraulic length	=	267.40 Feet
Elevation change	=	8.0 feet.
Concentration time	=	0.04 hours
Concentration time type	=	SCS Upland Curves
Unit hydrograph type	=	Disturbed

-- Total Area = 0.6 acres

-- Storm data

Total precipitation	=	1.3 inches
Storm type	=	SCS 6 hour design storm
Peak Discharge	=	0.28 cfs
Discharge volume	=	0.03 acre ft

Project Title = WEST RIDGE DA-11 (10/24)
WATERSHED HYDROGRAPH
Inflow into structure # 1
Structure type: Null

-- Watershed data for watershed # 1

Curve number	=	90.0
Area	=	0.6 acres
Hydraulic length	=	267.40 Feet
Elevation change	=	8.0 feet.
Concentration time	=	0.04 hours
Concentration time type	=	SCS Upland Curves
Unit hydrograph type	=	Disturbed

-- Total Area = 0.6 acres

-- Storm data

Total precipitation	=	2.0 inches
Storm type	=	SCS Type 2 storm, 24 hour storm
Peak Discharge	=	0.62 cfs
Discharge volume	=	0.06 acre ft

Project Title = WEST RIDGE DA-11 (25/6)
WATERSHED HYDROGRAPH
Inflow into structure # 1
Structure type: Null

-- Watershed data for watershed # 1

Curve number	=	90.0
Area	=	0.6 acres
Hydraulic length	=	267.40 Feet
Elevation change	=	8.0 feet.
Concentration time	=	0.04 hours
Concentration time type	=	SCS Upland Curves
Unit hydrograph type	=	Disturbed

-- Total Area = 0.6 acres

-- Storm data

Total precipitation	=	1.6 inches
Storm type	=	SCS 6 hour design storm
Peak Discharge	=	0.41 cfs
Discharge volume	=	0.04 acre ft

Project Title = WEST RIDGE DA-11 (100/6)
WATERSHED HYDROGRAPH
Inflow into structure # 1
Structure type: Null

-- Watershed data for watershed # 1

Curve number	=	90.0
Area	=	0.6 acres
Hydraulic length	=	267.40 Feet
Elevation change	=	8.0 feet.
Concentration time	=	0.04 hours
Concentration time type	=	SCS Upland Curves
Unit hydrograph type	=	Disturbed

-- Total Area = 0.6 acres

-- Storm data

Total precipitation	=	2.0 inches
Storm type	=	SCS 6 hour design storm
Peak Discharge	=	0.58 cfs
Discharge volume	=	0.06 acre ft

Project Title = WEST RIDGE DA-12 (10/6)
WATERSHED HYDROGRAPH
Inflow into structure # 1
Structure type: Null

-- Watershed data for watershed # 1

Curve number	=	90.0
Area	=	1.5 acres
Hydraulic length	=	495.60 Feet
Elevation change	=	76.0 feet.
Concentration time	=	0.04 hours
Concentration time type	=	SCS Upland Curves
Unit hydrograph type	=	Disturbed

-- Total Area = 1.5 acres

-- Storm data

Total precipitation	=	1.3 inches
Storm type	=	SCS 6 hour design storm
Peak Discharge	=	0.65 cfs
Discharge volume	=	0.07 acre ft

```
Project Title          = WEST RIDGE DA-12 (10/24)
WATERSHED HYDROGRAPH
     Inflow into structure #  1
     Structure type:          Null


-- Watershed data for watershed # 1
    Curve number              =    90.0
    Area                      =     1.5 acres
    Hydraulic length          =  495.60 Feet
    Elevation change          =    76.0 feet.
    Concentration time        =    0.04 hours
    Concentration time type = SCS Upland Curves
    Unit hydrograph type    = Disturbed

-- Total Area            =     1.5 acres

-- Storm data
    Total precipitation  =     2.0 inches
    Storm type           = SCS Type 2 storm, 24 hour storm
    Peak Discharge       =    1.42 cfs
    Discharge volume     =    0.14 acre ft
```

Project Title = WEST RIDGE DA-12 (25/6)
WATERSHED HYDROGRAPH
Inflow into structure # 1
Structure type: Null

-- Watershed data for watershed # 1

Curve number	=	90.0
Area	=	1.5 acres
Hydraulic length	=	495.60 Feet
Elevation change	=	76.0 feet.
Concentration time	=	0.04 hours
Concentration time type	=	SCS Upland Curves
Unit hydrograph type	=	Disturbed

-- Total Area = 1.5 acres

-- Storm data

Total precipitation	=	1.6 inches
Storm type	=	SCS 6 hour design storm
Peak Discharge	=	0.93 cfs
Discharge volume	=	0.09 acre ft

Project Title = WEST RIDGE DA-12 (100/6)
WATERSHED HYDROGRAPH
Inflow into structure # 1
Structure type: Null

-- Watershed data for watershed # 1

Curve number	=	90.0
Area	=	1.5 acres
Hydraulic length	=	495.60 Feet
Elevation change	=	76.0 feet.
Concentration time	=	0.04 hours
Concentration time type	=	SCS Upland Curves
Unit hydrograph type	=	Disturbed

-- Total Area = 1.5 acres

-- Storm data

Total precipitation	=	2.0 inches
Storm type	=	SCS 6 hour design storm
Peak Discharge	=	1.32 cfs
Discharge volume	=	0.14 acre ft

Project Title = WEST RIDGE DA-13 (10/6)
WATERSHED HYDROGRAPH
Inflow into structure # 1
Structure type: Null

-- Watershed data for watershed # 1

Curve number	=	90.0
Area	=	0.6 acres
Hydraulic length	=	461.00 Feet
Elevation change	=	28.0 feet.
Concentration time	=	0.05 hours
Concentration time type	=	SCS Upland Curves
Unit hydrograph type	=	Disturbed

-- Total Area = 0.6 acres

-- Storm data

Total precipitation	=	1.3 inches
Storm type	=	SCS 6 hour design storm
Peak Discharge	=	0.28 cfs
Discharge volume	=	0.03 acre ft

```
Project Title          = WEST RIDGE DA-13 (10/24)
WATERSHED HYDROGRAPH
    Inflow into structure #  1
    Structure type:          Null


-- Watershed data for watershed # 1
    Curve number              =    90.0
    Area                      =     0.6 acres
    Hydraulic length          =  461.00 Feet
    Elevation change          =    28.0 feet.
    Concentration time        =    0.05 hours
    Concentration time type = SCS Upland Curves
    Unit hydrograph type    = Disturbed

-- Total Area            =     0.6 acres

-- Storm data
    Total precipitation  =     2.0 inches
    Storm type           = SCS Type 2 storm, 24 hour storm
    Peak Discharge       =    0.61 cfs
    Discharge volume     =    0.05 acre ft
```

```
Project Title          = WEST RIDGE DA-13 (25/6)
WATERSHED HYDROGRAPH
    Inflow into structure #  1
    Structure type:          Null


-- Watershed data for watershed # 1
    Curve number              =    90.0
    Area                      =     0.6 acres
    Hydraulic length          =  461.00 Feet
    Elevation change          =    28.0 feet.
    Concentration time        =    0.05 hours
    Concentration time type = SCS Upland Curves
    Unit hydrograph type      = Disturbed

-- Total Area            =     0.6 acres

-- Storm data
    Total precipitation  =     1.6 inches
    Storm type           = SCS 6 hour design storm
    Peak Discharge       =    0.40 cfs
    Discharge volume     =    0.04 acre ft
```

Project Title = WEST RIDGE DA-13 (100/6)
WATERSHED HYDROGRAPH
Inflow into structure # 1
Structure type: Null

-- Watershed data for watershed # 1

Curve number	=	90.0
Area	=	0.6 acres
Hydraulic length	=	461.00 Feet
Elevation change	=	28.0 feet.
Concentration time	=	0.05 hours
Concentration time type	=	SCS Upland Curves
Unit hydrograph type	=	Disturbed

-- Total Area = 0.6 acres

-- Storm data

Total precipitation	=	2.0 inches
Storm type	=	SCS 6 hour design storm
Peak Discharge	=	0.56 cfs
Discharge volume	=	0.05 acre ft

Project Title = WEST RIDGE DA-14 (10/6)
WATERSHED HYDROGRAPH
Inflow into structure # 1
Structure type: Null

-- Watershed data for watershed # 1

Curve number	=	90.0
Area	=	2.1 acres
Hydraulic length	=	504.40 Feet
Elevation change	=	34.0 feet.
Concentration time	=	0.05 hours
Concentration time type	=	SCS Upland Curves
Unit hydrograph type	=	Disturbed

-- Total Area = 2.1 acres

-- Storm data

Total precipitation	=	1.3 inches
Storm type	=	SCS 6 hour design storm
Peak Discharge	=	1.02 cfs
Discharge volume	=	0.09 acre ft

Project Title = WEST RIDGE DA-14 (10/24)
WATERSHED HYDROGRAPH
Inflow into structure # 1
Structure type: Null

-- Watershed data for watershed # 1

Curve number	=	90.0
Area	=	2.1 acres
Hydraulic length	=	504.40 Feet
Elevation change	=	34.0 feet.
Concentration time	=	0.05 hours
Concentration time type	=	SCS Upland Curves
Unit hydrograph type	=	Disturbed

-- Total Area = 2.1 acres

-- Storm data

Total precipitation	=	2.0 inches
Storm type	=	SCS Type 2 storm, 24 hour storm
Peak Discharge	=	2.25 cfs
Discharge volume	=	0.20 acre ft

Project Title = WEST RIDGE DA-14 (25/6)
WATERSHED HYDROGRAPH
Inflow into structure # 1
Structure type: Null

-- Watershed data for watershed # 1

Curve number	=	90.0
Area	=	2.1 acres
Hydraulic length	=	504.40 Feet
Elevation change	=	34.0 feet.
Concentration time	=	0.05 hours
Concentration time type	=	SCS Upland Curves
Unit hydrograph type	=	Disturbed

-- Total Area = 2.1 acres

-- Storm data

Total precipitation	=	1.6 inches
Storm type	=	SCS 6 hour design storm
Peak Discharge	=	1.47 cfs
Discharge volume	=	0.14 acre ft

Project Title = WEST RIDGE DA-14 (100/6)
WATERSHED HYDROGRAPH
Inflow into structure # 1
Structure type: Null

-- Watershed data for watershed # 1

Curve number	=	90.0
Area	=	2.1 acres
Hydraulic length	=	504.40 Feet
Elevation change	=	34.0 feet.
Concentration time	=	0.05 hours
Concentration time type	=	SCS Upland Curves
Unit hydrograph type	=	Disturbed

-- Total Area = 2.1 acres

-- Storm data

Total precipitation	=	2.0 inches
Storm type	=	SCS 6 hour design storm
Peak Discharge	=	2.09 cfs
Discharge volume	=	0.20 acre ft

Project Title = WEST RIDGE DA-15 (10/6)
WATERSHED HYDROGRAPH
Inflow into structure # 1
Structure type: Null

-- Watershed data for watershed # 1

Curve number	=	90.0
Area	=	1.3 acres
Hydraulic length	=	877.60 Feet
Elevation change	=	84.0 feet.
Concentration time	=	0.08 hours
Concentration time type	=	SCS Upland Curves
Unit hydrograph type	=	Disturbed

-- Total Area = 1.3 acres

-- Storm data

Total precipitation	=	1.3 inches
Storm type	=	SCS 6 hour design storm
Peak Discharge	=	0.66 cfs
Discharge volume	=	0.06 acre ft

Project Title = WEST RIDGE DA-15 (10/24)
WATERSHED HYDROGRAPH
Inflow into structure # 1
Structure type: Null

-- Watershed data for watershed # 1

Curve number	=	90.0
Area	=	1.3 acres
Hydraulic length	=	877.60 Feet
Elevation change	=	84.0 feet.
Concentration time	=	0.08 hours
Concentration time type	=	SCS Upland Curves
Unit hydrograph type	=	Disturbed

-- Total Area = 1.3 acres

-- Storm data

Total precipitation	=	2.0 inches
Storm type	=	SCS Type 2 storm, 24 hour storm
Peak Discharge	=	1.46 cfs
Discharge volume	=	0.12 acre ft

Project Title = WEST RIDGE DA-15 (25/6)
WATERSHED HYDROGRAPH
Inflow into structure # 1
Structure type: Null

-- Watershed data for watershed # 1

Curve number	=	90.0
Area	=	1.3 acres
Hydraulic length	=	877.60 Feet
Elevation change	=	84.0 feet.
Concentration time	=	0.08 hours
Concentration time type	=	SCS Upland Curves
Unit hydrograph type	=	Disturbed

-- Total Area = 1.3 acres

-- Storm data

Total precipitation	=	1.6 inches
Storm type	=	SCS 6 hour design storm
Peak Discharge	=	0.95 cfs
Discharge volume	=	0.08 acre ft

Project Title = WEST RIDGE DA-15 (100/6)
WATERSHED HYDROGRAPH
Inflow into structure # 1
Structure type: Null

-- Watershed data for watershed # 1

Curve number	=	90.0
Area	=	1.3 acres
Hydraulic length	=	877.60 Feet
Elevation change	=	84.0 feet.
Concentration time	=	0.08 hours
Concentration time type	=	SCS Upland Curves
Unit hydrograph type	=	Disturbed

-- Total Area = 1.3 acres

-- Storm data

Total precipitation	=	2.0 inches
Storm type	=	SCS 6 hour design storm
Peak Discharge	=	1.35 cfs
Discharge volume	=	0.12 acre ft

```
Project Title          = WEST RIDGE DA-W (10/6)
WATERSHED HYDROGRAPH
     Inflow into structure #  1
     Structure type:         Null


-- Watershed data for watershed # 1
    Curve number              =    90.0
    Area                      =     1.3 acres
    Hydraulic length          =  877.60 Feet
    Elevation change          =    84.0 feet.
    Concentration time        =    0.08 hours
    Concentration time type = SCS Upland Curves
    Unit hydrograph type      = Disturbed

-- Total Area            =     1.3 acres

-- Storm data
    Total precipitation  =     1.3 inches
    Storm type           = SCS 6 hour design storm
    Peak Discharge       =    0.66 cfs
    Discharge volume     =    0.06 acre ft
```

```
Project Title          = WEST RIDGE DA-W (10/24)
WATERSHED HYDROGRAPH
     Inflow into structure #  1
     Structure type:          Null


-- Watershed data for watershed # 1
    Curve number              =    90.0
    Area                      =     1.3 acres
    Hydraulic length          =  877.60 Feet
    Elevation change          =    84.0 feet.
    Concentration time        =    0.08 hours
    Concentration time type = SCS Upland Curves
    Unit hydrograph type      = Disturbed

-- Total Area            =     1.3 acres

-- Storm data
    Total precipitation  =     2.0 inches
    Storm type           = SCS Type 2 storm, 24 hour storm
    Peak Discharge       =    1.46 cfs
    Discharge volume     =    0.12 acre ft
```

```
Project Title          = WEST RIDGE DA-W (25/6)
WATERSHED HYDROGRAPH
     Inflow into structure #  1
     Structure type:          Null


-- Watershed data for watershed # 1
    Curve number              =    90.0
    Area                      =     1.3 acres
    Hydraulic length          =  877.60 Feet
    Elevation change          =    84.0 feet.
    Concentration time        =    0.08 hours
    Concentration time type = SCS Upland Curves
    Unit hydrograph type      = Disturbed

-- Total Area            =     1.3 acres

-- Storm data
    Total precipitation  =     1.6 inches
    Storm type           = SCS 6 hour design storm
    Peak Discharge       =    0.95 cfs
    Discharge volume     =    0.08 acre ft
```

```
Project Title          = WEST RIDGE DA-W (100/6)
WATERSHED HYDROGRAPH
     Inflow into structure #  1
     Structure type:          Null


-- Watershed data for watershed # 1
    Curve number              =    90.0
    Area                      =     1.3 acres
    Hydraulic length          =  877.60 Feet
    Elevation change          =    84.0 feet.
    Concentration time        =    0.08 hours
    Concentration time type = SCS Upland Curves
    Unit hydrograph type    = Disturbed

-- Total Area            =     1.3 acres

-- Storm data
    Total precipitation  =     2.0 inches
    Storm type           = SCS 6 hour design storm
    Peak Discharge       =    1.35 cfs
    Discharge volume     =    0.12 acre ft
```

Project Title = WEST RIDGE DA-X (10/24)
WATERSHED HYDROGRAPH
Inflow into structure # 1
Structure type: Null

-- Watershed data for watershed # 1

Curve number	=	90.0
Area	=	1.2 acres
Hydraulic length	=	340.40 Feet
Elevation change	=	34.0 feet.
Concentration time	=	0.03 hours
Concentration time type	=	SCS Upland Curves
Unit hydrograph type	=	Disturbed

-- Total Area = 1.2 acres

-- Storm data

Total precipitation	=	2.0 inches
Storm type	=	SCS Type 2 storm, 24 hour storm
Peak Discharge	=	1.08 cfs
Discharge volume	=	0.11 acre ft

Project Title = WEST RIDGE DA-X (10/24 CONTAINMENT)
WATERSHED HYDROGRAPH
Inflow into structure # 1
Structure type: Null

-- Watershed data for watershed # 1

Curve number	=	90.0
Area	=	0.2 acres
Hydraulic length	=	70.00 Feet
Elevation change	=	12.0 feet.
Concentration time	=	0.00 hours
Concentration time type	=	SCS Upland Curves
Unit hydrograph type	=	Disturbed

-- Total Area = 0.2 acres

-- Storm data

Total precipitation	=	2.0 inches
Storm type	=	SCS Type 2 storm, 24 hour storm
Peak Discharge	=	0.08 cfs
Discharge volume	=	0.01 acre ft

Project Title = WEST RIDGE DA-X (25/6)
WATERSHED HYDROGRAPH
Inflow into structure # 1
Structure type: Null

-- Watershed data for watershed # 1

Curve number	=	90.0
Area	=	1.2 acres
Hydraulic length	=	340.40 Feet
Elevation change	=	34.0 feet.
Concentration time	=	0.03 hours
Concentration time type	=	SCS Upland Curves
Unit hydrograph type	=	Disturbed

-- Total Area = 1.2 acres

-- Storm data

Total precipitation	=	1.6 inches
Storm type	=	SCS 6 hour design storm
Peak Discharge	=	0.71 cfs
Discharge volume	=	0.08 acre ft

```
Project Title          = WEST RIDGE DA-X (100/6)
WATERSHED HYDROGRAPH
     Inflow into structure #  1
     Structure type:          Null


-- Watershed data for watershed # 1
    Curve number              =    90.0
    Area                      =     1.2 acres
    Hydraulic length          =  340.40 Feet
    Elevation change          =    34.0 feet.
    Concentration time        =    0.03 hours
    Concentration time type = SCS Upland Curves
    Unit hydrograph type      = Disturbed

-- Total Area            =     1.2 acres

-- Storm data
    Total precipitation  =     2.0 inches
    Storm type           = SCS 6 hour design storm
    Peak Discharge       =    1.00 cfs
    Discharge volume     =    0.11 acre ft
```

Project Title = WEST RIDGE DA-Y (10/6)
WATERSHED HYDROGRAPH
Inflow into structure # 1
Structure type: Null

-- Watershed data for watershed # 1

Curve number	=	90.0
Area	=	0.1 acres
Hydraulic length	=	35.00 Feet
Elevation change	=	11.0 feet.
Concentration time	=	0.00 hours
Concentration time type	=	SCS Upland Curves
Unit hydrograph type	=	Disturbed

-- Total Area = 0.1 acres

-- Storm data

Total precipitation	=	1.3 inches
Storm type	=	SCS 6 hour design storm
Peak Discharge	=	0.02 cfs
Discharge volume	=	0.00 acre ft

Project Title = WEST RIDGE DA-Y (10/24)
WATERSHED HYDROGRAPH
Inflow into structure # 1
Structure type: Null

-- Watershed data for watershed # 1
Curve number = 90.0
Area = 0.1 acres
Hydraulic length = 35.00 Feet
Elevation change = 11.0 feet.
Concentration time = 0.00 hours
Concentration time type = SCS Upland Curves
Unit hydrograph type = Disturbed

-- Total Area = 0.1 acres

-- Storm data
Total precipitation = 2.0 inches
Storm type = SCS Type 2 storm, 24 hour storm
Peak Discharge = 0.04 cfs
Discharge volume = 0.01 acre ft

```
Project Title          = WEST RIDGE DA-Y (25/6)
WATERSHED HYDROGRAPH
     Inflow into structure #  1
     Structure type:          Null


-- Watershed data for watershed # 1
    Curve number              =    90.0
    Area                      =     0.1 acres
    Hydraulic length          =   35.00 Feet
    Elevation change          =    11.0 feet.
    Concentration time        =    0.00 hours
    Concentration time type   = SCS Upland Curves
    Unit hydrograph type      = Disturbed

-- Total Area            =     0.1 acres

-- Storm data
    Total precipitation  =     1.6 inches
    Storm type           = SCS 6 hour design storm
    Peak Discharge       =    0.03 cfs
    Discharge volume     =    0.01 acre ft
```

Project Title = WEST RIDGE DA-Y (100/6)
WATERSHED HYDROGRAPH
Inflow into structure # 1
Structure type: Null

-- Watershed data for watershed # 1

Curve number	=	90.0
Area	=	0.1 acres
Hydraulic length	=	35.00 Feet
Elevation change	=	11.0 feet.
Concentration time	=	0.00 hours
Concentration time type	=	SCS Upland Curves
Unit hydrograph type	=	Disturbed

-- Total Area = 0.1 acres

-- Storm data

Total precipitation	=	2.0 inches
Storm type	=	SCS 6 hour design storm
Peak Discharge	=	0.04 cfs
Discharge volume	=	0.01 acre ft

Project Title = WEST RIDGE DA-Z (10/6)
WATERSHED HYDROGRAPH
Inflow into structure # 1
Structure type: Null

-- Watershed data for watershed # 1

Curve number	=	83.0
Area	=	1.6 acres
Hydraulic length	=	278.10 Feet
Elevation change	=	5.0 feet.
Concentration time	=	0.06 hours
Concentration time type	=	SCS Upland Curves
Unit hydrograph type	=	Disturbed

-- Total Area = 1.6 acres

-- Storm data

Total precipitation	=	1.3 inches
Storm type	=	SCS 6 hour design storm
Peak Discharge	=	0.36 cfs
Discharge volume	=	0.04 acre ft

Project Title = WEST RIDGE DA-Z (10/24)
WATERSHED HYDROGRAPH
Inflow into structure # 1
Structure type: Null

-- Watershed data for watershed # 1

Curve number	=	83.0
Area	=	1.6 acres
Hydraulic length	=	278.10 Feet
Elevation change	=	5.0 feet.
Concentration time	=	0.06 hours
Concentration time type	=	SCS Upland Curves
Unit hydrograph type	=	Disturbed

-- Total Area = 1.6 acres

-- Storm data

Total precipitation	=	2.0 inches
Storm type	=	SCS Type 2 storm, 24 hour storm
Peak Discharge	=	1.15 cfs
Discharge volume	=	0.09 acre ft

```
Project Title          = WEST RIDGE DA-Z (25/6)
WATERSHED HYDROGRAPH
     Inflow into structure #  1
     Structure type:          Null


-- Watershed data for watershed # 1
    Curve number              =    83.0
    Area                      =     1.6 acres
    Hydraulic length          =  278.10 Feet
    Elevation change          =     5.0 feet.
    Concentration time        =    0.06 hours
    Concentration time type = SCS Upland Curves
    Unit hydrograph type      = Disturbed

-- Total Area            =     1.6 acres

-- Storm data
    Total precipitation  =     1.6 inches
    Storm type           = SCS 6 hour design storm
    Peak Discharge       =    0.62 cfs
    Discharge volume     =    0.06 acre ft
```

Project Title = WEST RIDGE DA-Z (100/6)
WATERSHED HYDROGRAPH
Inflow into structure # 1
Structure type: Null

-- Watershed data for watershed # 1

Curve number	=	83.0
Area	=	1.6 acres
Hydraulic length	=	278.10 Feet
Elevation change	=	5.0 feet.
Concentration time	=	0.06 hours
Concentration time type	=	SCS Upland Curves
Unit hydrograph type	=	Disturbed

-- Total Area = 1.6 acres

-- Storm data

Total precipitation	=	2.0 inches
Storm type	=	SCS 6 hour design storm
Peak Discharge	=	1.01 cfs
Discharge volume	=	0.09 acre ft

UNDISTURBED CULVERT

CALCULATIONS

Circular Channel Analysis & Design
Solved with Manning's Equation

Open Channel - Uniform flow

Worksheet Name: WEST RIDGE

Comment: CULVERT UC-AA (10/6)

Solve For Full Flow Diameter

Given Input Data:

Slope.....	0.0700 ft/ft
Manning's n.....	0.020
Discharge.....	12.97 cfs

Computed Results:

Full Flow Diameter.....	1.32 ft
Full Flow Depth.....	1.32 ft
Velocity.....	9.41 fps
Flow Area.....	1.38 sf
Critical Depth....	1.28 ft
Critical Slope....	0.0613 ft/ft
Percent Full.....	100.00 %
Full Capacity.....	12.97 cfs
QMAX @.94D.....	13.95 cfs
Froude Number.....	FULL

Open Channel Flow Module, Version 3.43 (c) 1991
Haestad Methods, Inc. * 37 Brookside Rd * Waterbury, Ct 06708

Circular Channel Analysis & Design
Solved with Manning's Equation

Open Channel - Uniform flow

Worksheet Name: WEST RIDGE

Comment: CULVERT UC-AA (10/24)

Solve For Full Flow Diameter

Given Input Data:

Slope.....	0.0700 ft/ft
Manning's n.....	0.020
Discharge.....	45.12 cfs

Computed Results:

Full Flow Diameter.....	2.11 ft
Full Flow Depth.....	2.11 ft
Velocity.....	12.85 fps
Flow Area.....	3.51 sf
Critical Depth....	2.06 ft
Critical Slope....	0.0620 ft/ft
Percent Full.....	100.00 %
Full Capacity.....	45.12 cfs
QMAX @.94D.....	48.54 cfs
Froude Number.....	FULL

Circular Channel Analysis & Design
Solved with Manning's Equation

Open Channel - Uniform flow

Worksheet Name: WEST RIDGE

Comment: CULVERT UC-AA (25/6)

Solve For Full Flow Diameter

Given Input Data:

Slope.....	0.0700 ft/ft
Manning's n.....	0.020
Discharge.....	25.65 cfs

Computed Results:

Full Flow Diameter.....	1.71 ft
Full Flow Depth.....	1.71 ft
Velocity.....	11.16 fps
Flow Area.....	2.30 sf
Critical Depth....	1.66 ft
Critical Slope....	0.0617 ft/ft
Percent Full.....	100.00 %
Full Capacity.....	25.65 cfs
QMAX @.94D.....	27.59 cfs
Froude Number.....	FULL

Open Channel Flow Module, Version 3.43 (c) 1991
Haestad Methods, Inc. * 37 Brook

Circular Channel Analysis & Design
Solved with Manning's Equation

Open Channel - Uniform flow

Worksheet Name: WEST RIDGE

Comment: CULVERT UC-AA (100/6)

Solve For Full Flow Diameter

Given Input Data:

Slope.....	0.0700 ft/ft
Manning's n.....	0.020
Discharge.....	46.45 cfs

Computed Results:

Full Flow Diameter.....	2.14 ft
Full Flow Depth.....	2.14 ft
Velocity.....	12.94 fps
Flow Area.....	3.59 sf
Critical Depth....	2.08 ft
Critical Slope....	0.0620 ft/ft
Percent Full.....	100.00 %
Full Capacity.....	46.45 cfs
QMAX @.94D.....	49.97 cfs
Froude Number.....	FULL

Open Channel Flow Module, Version 3.43 (c) 1991
Haestad Methods, Inc. * 37 Brookside Rd * Waterbury, Ct 06708

Circular Channel Analysis & Design
Solved with Manning's Equation

Open Channel - Uniform flow

Worksheet Name: WEST RIDGE

Comment: CULVERT UC-DD (10/6)

Solve For Full Flow Diameter

Given Input Data:

Slope.....	0.2800 ft/ft
Manning's n.....	0.020
Discharge.....	0.15 cfs

Computed Results:

Full Flow Diameter.....	0.19 ft
Full Flow Depth.....	0.19 ft
Velocity.....	5.19 fps
Flow Area.....	0.03 sf
Critical Depth....	0.19 ft
Critical Slope....	0.2599 ft/ft
Percent Full.....	100.00 %
Full Capacity.....	0.15 cfs
QMAX @.94D.....	0.16 cfs
Froude Number.....	FULL

Circular Channel Analysis & Design
Solved with Manning's Equation

Open Channel - Uniform flow

Worksheet Name: WEST RIDGE

Comment: CULVERT UC-DD (10/24)

Solve For Full Flow Diameter

Given Input Data:

Slope.....	0.2800 ft/ft
Manning's n.....	0.020
Discharge.....	0.64 cfs

Computed Results:

Full Flow Diameter.....	0.33 ft
Full Flow Depth.....	0.33 ft
Velocity.....	7.46 fps
Flow Area.....	0.09 sf
Critical Depth....	0.33 ft
Critical Slope....	0.2629 ft/ft
Percent Full.....	100.00 %
Full Capacity.....	0.64 cfs
QMAX @.94D.....	0.69 cfs
Froude Number.....	FULL

Open Channel Flow Module, Version 3.43 (c) 1991
Haestad Methods, Inc. * 37 Brookside Rd * Waterbury, Ct 06708

Circular Channel Analysis & Design
Solved with Manning's Equation

Open Channel - Uniform flow

Worksheet Name: WEST RIDGE

Comment: CULVERT UC-DD (25/6)

Solve For Full Flow Diameter

Given Input Data:

Slope.....	0.2800 ft/ft
Manning's n.....	0.020
Discharge.....	0.44 cfs

Computed Results:

Full Flow Diameter.....	0.29 ft
Full Flow Depth.....	0.29 ft
Velocity.....	6.79 fps
Flow Area.....	0.06 sf
Critical Depth....	0.29 ft
Critical Slope....	0.2622 ft/ft
Percent Full.....	100.00 %
Full Capacity.....	0.44 cfs
QMAX @.94D.....	0.47 cfs
Froude Number.....	FULL

Open Channel Flow Module, Version 3.43 (c) 1991
Haestad Methods, Inc. * 37 Brookside Rd * Waterbury, Ct 06708

Circular Channel Analysis & Design
Solved with Manning's Equation

Open Channel - Uniform flow

Worksheet Name: WEST RIDGE

Comment: CULVERT UC-DD (100/6)

Solve For Full Flow Diameter

Given Input Data:

Slope.....	0.2800 ft/ft
Manning's n.....	0.020
Discharge.....	0.92 cfs

Computed Results:

Full Flow Diameter.....	0.38 ft
Full Flow Depth.....	0.38 ft
Velocity.....	8.17 fps
Flow Area.....	0.11 sf
Critical Depth....	0.38 ft
Critical Slope....	0.2636 ft/ft
Percent Full.....	100.00 %
Full Capacity.....	0.92 cfs
QMAX @.94D.....	0.99 cfs
Froude Number.....	FULL

Circular Channel Analysis & Design
Solved with Manning's Equation

Open Channel - Uniform flow

Worksheet Name: WEST RIDGE

Comment: CULVERT UC-EE (10/6)

Solve For Full Flow Diameter

Given Input Data:

Slope.....	0.0640 ft/ft
Manning's n.....	0.020
Discharge.....	13.12 cfs

Computed Results:

Full Flow Diameter.....	1.35 ft
Full Flow Depth.....	1.35 ft
Velocity.....	9.13 fps
Flow Area.....	1.44 sf
Critical Depth....	1.30 ft
Critical Slope....	0.0557 ft/ft
Percent Full.....	100.00 %
Full Capacity.....	13.12 cfs
QMAX @.94D.....	14.11 cfs
Froude Number.....	FULL

Open Channel Flow Module, Version 3.43 (c) 1991
Haestad Methods, Inc. * 37 Brookside Rd * Waterbury, Ct 06708

Circular Channel Analysis & Design
Solved with Manning's Equation

Open Channel - Uniform flow

Worksheet Name: WEST RIDGE

Comment: CULVERT UC-EE (10/24)

Solve For Full Flow Diameter

Given Input Data:

Slope.....	0.0640 ft/ft
Manning's n.....	0.020
Discharge.....	45.76 cfs

Computed Results:

Full Flow Diameter.....	2.16 ft
Full Flow Depth.....	2.16 ft
Velocity.....	12.47 fps
Flow Area.....	3.67 sf
Critical Depth....	2.10 ft
Critical Slope....	0.0563 ft/ft
Percent Full.....	100.00 %
Full Capacity.....	45.76 cfs
QMAX @.94D.....	49.22 cfs
Froude Number.....	FULL

Circular Channel Analysis & Design
Solved with Manning's Equation

Open Channel - Uniform flow

Worksheet Name: WEST RIDGE

Comment: CULVERT UC-EE (25/6)

Solve For Full Flow Diameter

Given Input Data:

Slope.....	0.0640 ft/ft
Manning's n.....	0.020
Discharge.....	26.09 cfs

Computed Results:

Full Flow Diameter.....	1.75 ft
Full Flow Depth.....	1.75 ft
Velocity.....	10.84 fps
Flow Area.....	2.41 sf
Critical Depth....	1.69 ft
Critical Slope....	0.0560 ft/ft
Percent Full.....	100.00 %
Full Capacity.....	26.09 cfs
QMAX @.94D.....	28.07 cfs
Froude Number.....	FULL

Circular Channel Analysis & Design
Solved with Manning's Equation

Open Channel - Uniform flow

Worksheet Name: WEST RIDGE

Comment: CULVERT UC-EE (100/6)

Solve For Full Flow Diameter

Given Input Data:

Slope.....	0.0640 ft/ft
Manning's n.....	0.020
Discharge.....	47.37 cfs

Computed Results:

Full Flow Diameter.....	2.19 ft
Full Flow Depth.....	2.19 ft
Velocity.....	12.58 fps
Flow Area.....	3.77 sf
Critical Depth....	2.12 ft
Critical Slope....	0.0564 ft/ft
Percent Full.....	100.00 %
Full Capacity.....	47.37 cfs
QMAX @.94D.....	50.96 cfs
Froude Number.....	FULL

Circular Channel Analysis & Design
Solved with Manning's Equation

Open Channel - Uniform flow

Worksheet Name: WEST RIDGE

Comment: CULVERT UC-FF (10/6)

Solve For Full Flow Diameter

Given Input Data:

Slope.....	0.2000 ft/ft
Manning's n.....	0.020
Discharge.....	0.16 cfs

Computed Results:

Full Flow Diameter.....	0.21 ft
Full Flow Depth.....	0.21 ft
Velocity.....	4.65 fps
Flow Area.....	0.03 sf
Critical Depth....	0.21 ft
Critical Slope....	0.1813 ft/ft
Percent Full.....	100.00 %
Full Capacity.....	0.16 cfs
QMAX @.94D.....	0.17 cfs
Froude Number.....	FULL

Circular Channel Analysis & Design
Solved with Manning's Equation

Open Channel - Uniform flow

Worksheet Name: WEST RIDGE

Comment: CULVERT UC-FF (10/24)

Solve For Full Flow Diameter

Given Input Data:

Slope.....	0.2000 ft/ft
Manning's n.....	0.020
Discharge.....	0.67 cfs

Computed Results:

Full Flow Diameter.....	0.36 ft
Full Flow Depth.....	0.36 ft
Velocity.....	6.65 fps
Flow Area.....	0.10 sf
Critical Depth....	0.35 ft
Critical Slope....	0.1839 ft/ft
Percent Full.....	100.00 %
Full Capacity.....	0.67 cfs
QMAX @.94D.....	0.72 cfs
Froude Number.....	FULL

Circular Channel Analysis & Design
Solved with Manning's Equation

Open Channel - Uniform flow

Worksheet Name: WEST RIDGE

Comment: CULVERT UC-FF (25/6)

Solve For Full Flow Diameter

Given Input Data:

Slope.....	0.2000 ft/ft
Manning's n.....	0.020
Discharge.....	0.46 cfs

Computed Results:

Full Flow Diameter.....	0.31 ft
Full Flow Depth.....	0.31 ft
Velocity.....	6.05 fps
Flow Area.....	0.08 sf
Critical Depth....	0.31 ft
Critical Slope....	0.1833 ft/ft
Percent Full.....	100.00 %
Full Capacity.....	0.46 cfs
QMAX @.94D.....	0.49 cfs
Froude Number.....	FULL

Circular Channel Analysis & Design
Solved with Manning's Equation

Open Channel - Uniform flow

Worksheet Name: WEST RIDGE

Comment: CULVERT UC-FF (100/6)

Solve For Full Flow Diameter

Given Input Data:

Slope.....	0.2000 ft/ft
Manning's n.....	0.020
Discharge.....	0.95 cfs

Computed Results:

Full Flow Diameter.....	0.41 ft
Full Flow Depth.....	0.41 ft
Velocity.....	7.26 fps
Flow Area.....	0.13 sf
Critical Depth....	0.40 ft
Critical Slope....	0.1845 ft/ft
Percent Full.....	100.00 %
Full Capacity.....	0.95 cfs
QMAX @.94D.....	1.02 cfs
Froude Number.....	FULL

Open Channel Flow Module, Version 3.43 (c) 1991
Haestad Methods, Inc. * 37 Brookside Rd * Waterbury, Ct 06708

Circular Channel Analysis & Design
Solved with Manning's Equation

Open Channel - Uniform flow

Worksheet Name: WEST RIDGE

Comment: CULVERT UC-GG (10/6)

Solve For Full Flow Diameter

Given Input Data:

Slope.....	0.0640 ft/ft
Manning's n.....	0.020
Discharge.....	13.28 cfs

Computed Results:

Full Flow Diameter.....	1.36 ft
Full Flow Depth.....	1.36 ft
Velocity.....	9.15 fps
Flow Area.....	1.45 sf
Critical Depth....	1.30 ft
Critical Slope....	0.0557 ft/ft
Percent Full.....	100.00 %
Full Capacity.....	13.28 cfs
QMAX @.94D.....	14.29 cfs
Froude Number.....	FULL

Circular Channel Analysis & Design
Solved with Manning's Equation

Open Channel - Uniform flow

Worksheet Name: WEST RIDGE

Comment: CULVERT UC-GG (10/24)

Solve For Full Flow Diameter

Given Input Data:

Slope.....	0.0640 ft/ft
Manning's n.....	0.020
Discharge.....	46.43 cfs

Computed Results:

Full Flow Diameter.....	2.17 ft
Full Flow Depth.....	2.17 ft
Velocity.....	12.52 fps
Flow Area.....	3.71 sf
Critical Depth....	2.11 ft
Critical Slope....	0.0563 ft/ft
Percent Full.....	100.00 %
Full Capacity.....	46.43 cfs
QMAX @.94D.....	49.95 cfs
Froude Number.....	FULL

Circular Channel Analysis & Design
Solved with Manning's Equation

Open Channel - Uniform flow

Worksheet Name: WEST RIDGE

Comment: CULVERT UC-GG (25/6)

Solve For Full Flow Diameter

Given Input Data:

Slope.....	0.0640 ft/ft
Manning's n.....	0.020
Discharge.....	26.55 cfs

Computed Results:

Full Flow Diameter.....	1.76 ft
Full Flow Depth.....	1.76 ft
Velocity.....	10.88 fps
Flow Area.....	2.44 sf
Critical Depth....	1.70 ft
Critical Slope....	0.0561 ft/ft
Percent Full.....	100.00 %
Full Capacity.....	26.55 cfs
QMAX @.94D.....	28.56 cfs
Froude Number.....	FULL

Circular Channel Analysis & Design
Solved with Manning's Equation

Open Channel - Uniform flow

Worksheet Name: WEST RIDGE

Comment: CULVERT UC-GG (100/6)

Solve For Full Flow Diameter

Given Input Data:

Slope.....	0.0640 ft/ft
Manning's n.....	0.020
Discharge.....	48.32 cfs

Computed Results:

Full Flow Diameter.....	2.21 ft
Full Flow Depth.....	2.21 ft
Velocity.....	12.64 fps
Flow Area.....	3.82 sf
Critical Depth....	2.14 ft
Critical Slope....	0.0564 ft/ft
Percent Full.....	100.00 %
Full Capacity.....	48.32 cfs
QMAX @.94D.....	51.98 cfs
Froude Number.....	FULL

Circular Channel Analysis & Design
Solved with Manning's Equation

Open Channel - Uniform flow

Worksheet Name: WEST RIDGE

Comment: CULVERT UC-HH (10/6)

Solve For Full Flow Diameter

Given Input Data:

Slope.....	0.1020 ft/ft
Manning's n.....	0.020
Discharge.....	7.39 cfs

Computed Results:

Full Flow Diameter.....	1.00 ft
Full Flow Depth.....	1.00 ft
Velocity.....	9.42 fps
Flow Area.....	0.78 sf
Critical Depth....	0.98 ft
Critical Slope....	0.0913 ft/ft
Percent Full.....	100.00 %
Full Capacity.....	7.39 cfs
QMAX @.94D.....	7.95 cfs
Froude Number.....	FULL

Circular Channel Analysis & Design
Solved with Manning's Equation

Open Channel - Uniform flow

Worksheet Name: WEST RIDGE

Comment: CULVERT UC-HH (10/24)

Solve For Full Flow Diameter

Given Input Data:

Slope.....	0.1020 ft/ft
Manning's n.....	0.020
Discharge.....	32.82 cfs

Computed Results:

Full Flow Diameter.....	1.75 ft
Full Flow Depth.....	1.75 ft
Velocity.....	13.67 fps
Flow Area.....	2.40 sf
Critical Depth....	1.72 ft
Critical Slope....	0.0927 ft/ft
Percent Full.....	100.00 %
Full Capacity.....	32.82 cfs
QMAX @.94D.....	35.30 cfs
Froude Number.....	FULL

Circular Channel Analysis & Design
Solved with Manning's Equation

Open Channel - Uniform flow

Worksheet Name: WEST RIDGE

Comment: CULVERT UC-HH (25/6)

Solve For Full Flow Diameter

Given Input Data:

Slope.....	0.1020 ft/ft
Manning's n.....	0.020
Discharge.....	13.08 cfs

Computed Results:

Full Flow Diameter.....	1.24 ft
Full Flow Depth.....	1.24 ft
Velocity.....	10.86 fps
Flow Area.....	1.20 sf
Critical Depth....	1.22 ft
Critical Slope....	0.0919 ft/ft
Percent Full.....	100.00 %
Full Capacity.....	13.08 cfs
QMAX @.94D.....	14.07 cfs
Froude Number.....	FULL

Open Channel Flow Module, Version 3.43 (c) 1991
Haestad Methods, Inc. * 37 Brookside Rd * Waterbury, Ct 06708

Circular Channel Analysis & Design
Solved with Manning's Equation

Open Channel - Uniform flow

Worksheet Name: WEST RIDGE

Comment: CULVERT UC-HH (100/6)

Solve For Full Flow Diameter

Given Input Data:

Slope.....	0.1020 ft/ft
Manning's n.....	0.020
Discharge.....	25.48 cfs

Computed Results:

Full Flow Diameter.....	1.59 ft
Full Flow Depth.....	1.59 ft
Velocity.....	12.83 fps
Flow Area.....	1.99 sf
Critical Depth....	1.57 ft
Critical Slope....	0.0925 ft/ft
Percent Full.....	100.00 %
Full Capacity.....	25.48 cfs
QMAX @.94D.....	27.41 cfs
Froude Number.....	FULL

Circular Channel Analysis & Design
Solved with Manning's Equation

Open Channel - Uniform flow

Worksheet Name: WEST RIDGE

Comment: CULVERT UC-JJ (10/6)

Solve For Full Flow Diameter

Given Input Data:

Slope.....	0.2720 ft/ft
Manning's n.....	0.020
Discharge.....	0.50 cfs

Computed Results:

Full Flow Diameter.....	0.30 ft
Full Flow Depth.....	0.30 ft
Velocity.....	6.94 fps
Flow Area.....	0.07 sf
Critical Depth....	0.30 ft
Critical Slope....	0.2545 ft/ft
Percent Full.....	100.00 %
Full Capacity.....	0.50 cfs
QMAX @.94D.....	0.54 cfs
Froude Number.....	FULL

Circular Channel Analysis & Design
Solved with Manning's Equation

Open Channel - Uniform flow

Worksheet Name: WEST RIDGE

Comment: CULVERT UC-JJ (10/24)

Solve For Full Flow Diameter

Given Input Data:

Slope.....	0.2720 ft/ft
Manning's n.....	0.020
Discharge.....	2.65 cfs

Computed Results:

Full Flow Diameter.....	0.57 ft
Full Flow Depth.....	0.57 ft
Velocity.....	10.52 fps
Flow Area.....	0.25 sf
Critical Depth....	0.56 ft
Critical Slope....	0.2576 ft/ft
Percent Full.....	100.00 %
Full Capacity.....	2.65 cfs
QMAX @.94D.....	2.85 cfs
Froude Number.....	FULL

Circular Channel Analysis & Design
Solved with Manning's Equation

Open Channel - Uniform flow

Worksheet Name: WEST RIDGE

Comment: CULVERT UC-JJ (25/6)

Solve For Full Flow Diameter

Given Input Data:

Slope.....	0.2720 ft/ft
Manning's n.....	0.020
Discharge.....	1.12 cfs

Computed Results:

Full Flow Diameter.....	0.41 ft
Full Flow Depth.....	0.41 ft
Velocity.....	8.49 fps
Flow Area.....	0.13 sf
Critical Depth....	0.41 ft
Critical Slope....	0.2560 ft/ft
Percent Full.....	100.00 %
Full Capacity.....	1.12 cfs
QMAX @.94D.....	1.20 cfs
Froude Number.....	FULL

Open Channel Flow Module, Version 3.43 (c) 1991
Haestad Methods, Inc. * 37 Brookside Rd * Waterbury, Ct 06708

Circular Channel Analysis & Design
Solved with Manning's Equation

Open Channel - Uniform flow

Worksheet Name: WEST RIDGE

Comment: CULVERT UC-JJ (100/6)

Solve For Full Flow Diameter

Given Input Data:

Slope.....	0.2720 ft/ft
Manning's n.....	0.020
Discharge.....	2.16 cfs

Computed Results:

Full Flow Diameter.....	0.52 ft
Full Flow Depth.....	0.52 ft
Velocity.....	10.00 fps
Flow Area.....	0.22 sf
Critical Depth....	0.52 ft
Critical Slope....	0.2572 ft/ft
Percent Full.....	100.00 %
Full Capacity.....	2.16 cfs
QMAX @.94D.....	2.32 cfs
Froude Number.....	FULL

Circular Channel Analysis & Design
Solved with Manning's Equation

Open Channel - Uniform flow

Worksheet Name: WEST RIDGE

Comment: CULVERT UC-KK (10/6)

Solve For Full Flow Diameter

Given Input Data:

Slope.....	0.1000 ft/ft
Manning's n.....	0.020
Discharge.....	7.89 cfs

Computed Results:

Full Flow Diameter.....	1.03 ft
Full Flow Depth.....	1.03 ft
Velocity.....	9.50 fps
Flow Area.....	0.83 sf
Critical Depth....	1.01 ft
Critical Slope....	0.0895 ft/ft
Percent Full.....	100.00 %
Full Capacity.....	7.89 cfs
QMAX @.94D.....	8.49 cfs
Froude Number.....	FULL

Circular Channel Analysis & Design
Solved with Manning's Equation

Open Channel - Uniform flow

Worksheet Name: WEST RIDGE

Comment: CULVERT UC-KK (10/24)

Solve For Full Flow Diameter

Given Input Data:

Slope.....	0.1000 ft/ft
Manning's n.....	0.020
Discharge.....	35.47 cfs

Computed Results:

Full Flow Diameter.....	1.81 ft
Full Flow Depth.....	1.81 ft
Velocity.....	13.83 fps
Flow Area.....	2.56 sf
Critical Depth....	1.78 ft
Critical Slope....	0.0909 ft/ft
Percent Full.....	100.00 %
Full Capacity.....	35.47 cfs
QMAX @.94D.....	38.16 cfs
Froude Number.....	FULL

Circular Channel Analysis & Design
Solved with Manning's Equation

Open Channel - Uniform flow

Worksheet Name: WEST RIDGE

Comment: CULVERT UC-KK (25/6)

Solve For Full Flow Diameter

Given Input Data:

Slope.....	0.1000 ft/ft
Manning's n.....	0.020
Discharge.....	14.20 cfs

Computed Results:

Full Flow Diameter.....	1.28 ft
Full Flow Depth.....	1.28 ft
Velocity.....	11.00 fps
Flow Area.....	1.29 sf
Critical Depth....	1.26 ft
Critical Slope....	0.0900 ft/ft
Percent Full.....	100.00 %
Full Capacity.....	14.20 cfs
QMAX @.94D.....	15.28 cfs
Froude Number.....	FULL

Open Channel Flow Module, Version 3.43 (c) 1991
Haestad Methods, Inc. * 37 Brookside Rd * Waterbury, Ct 06708

Circular Channel Analysis & Design
Solved with Manning's Equation

Open Channel - Uniform flow

Worksheet Name: WEST RIDGE

Comment: CULVERT UC-KK (100/6)

Solve For Full Flow Diameter

Given Input Data:

Slope.....	0.1000 ft/ft
Manning's n.....	0.020
Discharge.....	27.64 cfs

Computed Results:

Full Flow Diameter.....	1.65 ft
Full Flow Depth.....	1.65 ft
Velocity.....	13.00 fps
Flow Area.....	2.13 sf
Critical Depth....	1.62 ft
Critical Slope....	0.0906 ft/ft
Percent Full.....	100.00 %
Full Capacity.....	27.64 cfs
QMAX @.94D.....	29.73 cfs
Froude Number.....	FULL

Circular Channel Analysis & Design
Solved with Manning's Equation

Open Channel - Uniform flow

Worksheet Name: WEST RIDGE

Comment: CULVERT UC-LL (10/6)

Solve For Full Flow Diameter

Given Input Data:

Slope.....	0.0670 ft/ft
Manning's n.....	0.020
Discharge.....	21.17 cfs

Computed Results:

Full Flow Diameter.....	1.61 ft
Full Flow Depth.....	1.61 ft
Velocity.....	10.46 fps
Flow Area.....	2.02 sf
Critical Depth....	1.55 ft
Critical Slope....	0.0587 ft/ft
Percent Full.....	100.00 %
Full Capacity.....	21.17 cfs
QMAX @.94D.....	22.77 cfs
Froude Number.....	FULL

Circular Channel Analysis & Design
Solved with Manning's Equation

Open Channel - Uniform flow

Worksheet Name: WEST RIDGE

Comment: CULVERT UC-LL (10/24)

Solve For Full Flow Diameter

Given Input Data:

Slope.....	0.0670 ft/ft
Manning's n.....	0.020
Discharge.....	81.90 cfs

Computed Results:

Full Flow Diameter.....	2.67 ft
Full Flow Depth.....	2.67 ft
Velocity.....	14.67 fps
Flow Area.....	5.58 sf
Critical Depth....	2.60 ft
Critical Slope....	0.0595 ft/ft
Percent Full.....	100.00 %
Full Capacity.....	81.90 cfs
QMAX @.94D.....	88.10 cfs
Froude Number.....	FULL

Open Channel Flow Module, Version 3.43 (c) 1991
Haestad Methods, Inc. * 37 Brookside Rd * Waterbury, Ct 06708

Circular Channel Analysis & Design
Solved with Manning's Equation

Open Channel - Uniform flow

Worksheet Name: WEST RIDGE

Comment: CULVERT UC-LL (25/6)

Solve For Full Flow Diameter

Given Input Data:

Slope.....	0.0670 ft/ft
Manning's n.....	0.020
Discharge.....	40.75 cfs

Computed Results:

Full Flow Diameter.....	2.05 ft
Full Flow Depth.....	2.05 ft
Velocity.....	12.32 fps
Flow Area.....	3.31 sf
Critical Depth....	1.99 ft
Critical Slope....	0.0591 ft/ft
Percent Full.....	100.00 %
Full Capacity.....	40.75 cfs
QMAX @.94D.....	43.84 cfs
Froude Number.....	FULL

Open Channel Flow Module, Version 3.43 (c) 1991
Haestad Methods, Inc. * 37 Brookside Rd * Waterbury, Ct 06708

Circular Channel Analysis & Design
Solved with Manning's Equation

Open Channel - Uniform flow

Worksheet Name: WEST RIDGE

Comment: CULVERT UC-LL (100/6)

Solve For Full Flow Diameter

Given Input Data:

Slope.....	0.0670 ft/ft
Manning's n.....	0.020
Discharge.....	75.96 cfs

Computed Results:

Full Flow Diameter.....	2.59 ft
Full Flow Depth.....	2.59 ft
Velocity.....	14.40 fps
Flow Area.....	5.27 sf
Critical Depth....	2.53 ft
Critical Slope....	0.0595 ft/ft
Percent Full.....	100.00 %
Full Capacity.....	75.96 cfs
QMAX @.94D.....	81.71 cfs
Froude Number.....	FULL

Circular Channel Analysis & Design
Solved with Manning's Equation

Open Channel - Uniform flow

Worksheet Name: WEST RIDGE

Comment: CULVERT UC-MM (10/6)

Solve For Full Flow Diameter

Given Input Data:

Slope.....	0.3600 ft/ft
Manning's n.....	0.020
Discharge.....	0.07 cfs

Computed Results:

Full Flow Diameter.....	0.14 ft
Full Flow Depth.....	0.14 ft
Velocity.....	4.71 fps
Flow Area.....	0.01 sf
Critical Depth....	0.14 ft
Critical Slope....	0.3372 ft/ft
Percent Full.....	100.00 %
Full Capacity.....	0.07 cfs
QMAX @.94D.....	0.08 cfs
Froude Number.....	FULL

Circular Channel Analysis & Design
Solved with Manning's Equation

Open Channel - Uniform flow

Worksheet Name: WEST RIDGE

Comment: CULVERT UC-MM (10/24)

Solve For Full Flow Diameter

Given Input Data:

Slope.....	0.3600 ft/ft
Manning's n.....	0.020
Discharge.....	0.32 cfs

Computed Results:

Full Flow Diameter.....	0.24 ft
Full Flow Depth.....	0.24 ft
Velocity.....	6.89 fps
Flow Area.....	0.05 sf
Critical Depth....	0.24 ft
Critical Slope....	0.3409 ft/ft
Percent Full.....	100.00 %
Full Capacity.....	0.32 cfs
QMAX @.94D.....	0.34 cfs
Froude Number.....	FULL

Open Channel Flow Module, Version 3.43 (c) 1991
Haestad Methods, Inc. * 37 Brookside Rd * Waterbury, Ct 06708

Circular Channel Analysis & Design
Solved with Manning's Equation

Open Channel - Uniform flow

Worksheet Name: WEST RIDGE

Comment: CULVERT UC-MM (25/6)

Solve For Full Flow Diameter

Given Input Data:

Slope.....	0.3600 ft/ft
Manning's n.....	0.020
Discharge.....	0.24 cfs

Computed Results:

Full Flow Diameter.....	0.22 ft
Full Flow Depth.....	0.22 ft
Velocity.....	6.41 fps
Flow Area.....	0.04 sf
Critical Depth....	0.22 ft
Critical Slope....	0.3402 ft/ft
Percent Full.....	100.00 %
Full Capacity.....	0.24 cfs
QMAX @.94D.....	0.26 cfs
Froude Number.....	FULL

Circular Channel Analysis & Design
Solved with Manning's Equation

Open Channel - Uniform flow

Worksheet Name: WEST RIDGE

Comment: CULVERT UC-MM (100/6)

Solve For Full Flow Diameter

Given Input Data:

Slope.....	0.3600 ft/ft
Manning's n.....	0.020
Discharge.....	0.52 cfs

Computed Results:

Full Flow Diameter.....	0.29 ft
Full Flow Depth.....	0.29 ft
Velocity.....	7.78 fps
Flow Area.....	0.07 sf
Critical Depth....	0.29 ft
Critical Slope....	0.3419 ft/ft
Percent Full.....	100.00 %
Full Capacity.....	0.52 cfs
QMAX @.94D.....	0.56 cfs
Froude Number.....	FULL

Open Channel Flow Module, Version 3.43 (c) 1991
Haestad Methods, Inc. * 37 Brookside Rd * Waterbury, Ct 06708

Circular Channel Analysis & Design
Solved with Manning's Equation

Open Channel - Uniform flow

Worksheet Name: WEST RIDGE

Comment: CULVERT UC-NN (10/6)

Solve For Full Flow Diameter

Given Input Data:

Slope.....	0.0670 ft/ft
Manning's n.....	0.020
Discharge.....	21.24 cfs

Computed Results:

Full Flow Diameter.....	1.61 ft
Full Flow Depth.....	1.61 ft
Velocity.....	10.47 fps
Flow Area.....	2.03 sf
Critical Depth....	1.55 ft
Critical Slope....	0.0587 ft/ft
Percent Full.....	100.00 %
Full Capacity.....	21.24 cfs
QMAX @.94D.....	22.85 cfs
Froude Number.....	FULL

Open Channel Flow Module, Version 3.43 (c) 1991
Haestad Methods, Inc. * 37 Brookside Rd * Waterbury, Ct 06708

Circular Channel Analysis & Design
Solved with Manning's Equation

Open Channel - Uniform flow

Worksheet Name: WEST RIDGE

Comment: CULVERT UC-NN (10/24)

Solve For Full Flow Diameter

Given Input Data:

Slope.....	0.0670 ft/ft
Manning's n.....	0.020
Discharge.....	82.22 cfs

Computed Results:

Full Flow Diameter.....	2.67 ft
Full Flow Depth.....	2.67 ft
Velocity.....	14.69 fps
Flow Area.....	5.60 sf
Critical Depth....	2.61 ft
Critical Slope....	0.0595 ft/ft
Percent Full.....	100.00 %
Full Capacity.....	82.22 cfs
QMAX @.94D.....	88.44 cfs
Froude Number.....	FULL

Open Channel Flow Module, Version 3.43 (c) 1991
Haestad Methods, Inc. * 37 Brookside Rd * Waterbury, Ct 06708

Circular Channel Analysis & Design
Solved with Manning's Equation

Open Channel - Uniform flow

Worksheet Name: WEST RIDGE

Comment: CULVERT UC-NN (25/6)

Solve For Full Flow Diameter

Given Input Data:

Slope.....	0.0670 ft/ft
Manning's n.....	0.020
Discharge.....	40.99 cfs

Computed Results:

Full Flow Diameter.....	2.06 ft
Full Flow Depth.....	2.06 ft
Velocity.....	12.34 fps
Flow Area.....	3.32 sf
Critical Depth....	2.00 ft
Critical Slope....	0.0591 ft/ft
Percent Full.....	100.00 %
Full Capacity.....	40.99 cfs
QMAX @.94D.....	44.09 cfs
Froude Number.....	FULL

Circular Channel Analysis & Design
Solved with Manning's Equation

Open Channel - Uniform flow

Worksheet Name: WEST RIDGE

Comment: CULVERT UC-NN (100/6)

Solve For Full Flow Diameter

Given Input Data:

Slope.....	0.0670 ft/ft
Manning's n.....	0.020
Discharge.....	76.48 cfs

Computed Results:

Full Flow Diameter.....	2.60 ft
Full Flow Depth.....	2.60 ft
Velocity.....	14.42 fps
Flow Area.....	5.30 sf
Critical Depth....	2.53 ft
Critical Slope....	0.0595 ft/ft
Percent Full.....	100.00 %
Full Capacity.....	76.48 cfs
QMAX @.94D.....	82.27 cfs
Froude Number.....	FULL

Circular Channel Analysis & Design
Solved with Manning's Equation

Open Channel - Uniform flow

Worksheet Name: WEST RIDGE

Comment: CULVERT UC-OO (10/6)

Solve For Full Flow Diameter

Given Input Data:

Slope.....	0.0480 ft/ft
Manning's n.....	0.020
Discharge.....	44.97 cfs

Computed Results:

Full Flow Diameter.....	2.27 ft
Full Flow Depth.....	2.27 ft
Velocity.....	11.15 fps
Flow Area.....	4.03 sf
Critical Depth....	2.15 ft
Critical Slope....	0.0416 ft/ft
Percent Full.....	100.00 %
Full Capacity.....	44.97 cfs
QMAX @.94D.....	48.37 cfs
Froude Number.....	FULL

Circular Channel Analysis & Design
Solved with Manning's Equation

Open Channel - Uniform flow

Worksheet Name: WEST RIDGE

Comment: CULVERT UC-OO (10/24)

Solve For Full Flow Diameter

Given Input Data:

Slope.....	0.0480 ft/ft
Manning's n.....	0.020
Discharge.....	105.95 cfs

Computed Results:

Full Flow Diameter.....	3.13 ft
Full Flow Depth.....	3.13 ft
Velocity.....	13.81 fps
Flow Area.....	7.67 sf
Critical Depth....	3.00 ft
Critical Slope....	0.0418 ft/ft
Percent Full.....	100.00 %
Full Capacity.....	105.95 cfs
QMAX @.94D.....	113.97 cfs
Froude Number.....	FULL

Circular Channel Analysis & Design
Solved with Manning's Equation

Open Channel - Uniform flow

Worksheet Name: WEST RIDGE

Comment: CULVERT UC-OO (25/6)

Solve For Full Flow Diameter

Given Input Data:

Slope.....	0.0480 ft/ft
Manning's n.....	0.020
Discharge.....	64.72 cfs

Computed Results:

Full Flow Diameter.....	2.60 ft
Full Flow Depth.....	2.60 ft
Velocity.....	12.21 fps
Flow Area.....	5.30 sf
Critical Depth....	2.48 ft
Critical Slope....	0.0417 ft/ft
Percent Full.....	100.00 %
Full Capacity.....	64.72 cfs
QMAX @.94D.....	69.62 cfs
Froude Number.....	FULL

Circular Channel Analysis & Design
Solved with Manning's Equation

Open Channel - Uniform flow

Worksheet Name: WEST RIDGE

Comment: CULVERT UC-OO (100/6)

Solve For Full Flow Diameter

Given Input Data:

Slope.....	0.0480 ft/ft
Manning's n.....	0.020
Discharge.....	100.21 cfs

Computed Results:

Full Flow Diameter.....	3.06 ft
Full Flow Depth.....	3.06 ft
Velocity.....	13.62 fps
Flow Area.....	7.36 sf
Critical Depth....	2.93 ft
Critical Slope....	0.0418 ft/ft
Percent Full.....	100.00 %
Full Capacity.....	100.21 cfs
QMAX @.94D.....	107.80 cfs
Froude Number.....	FULL

Circular Channel Analysis & Design
Solved with Manning's Equation

Open Channel - Uniform flow

Worksheet Name: WEST RIDGE

Comment: CULVERT UC-PP (10/6)

Solve For Full Flow Diameter

Given Input Data:

Slope.....	0.1600 ft/ft
Manning's n.....	0.020
Discharge.....	0.11 cfs

Computed Results:

Full Flow Diameter.....	0.19 ft
Full Flow Depth.....	0.19 ft
Velocity.....	3.89 fps
Flow Area.....	0.03 sf
Critical Depth....	0.18 ft
Critical Slope....	0.1420 ft/ft
Percent Full.....	100.00 %
Full Capacity.....	0.11 cfs
QMAX @.94D.....	0.12 cfs
Froude Number.....	FULL

Circular Channel Analysis & Design
Solved with Manning's Equation

Open Channel - Uniform flow

Worksheet Name: WEST RIDGE

Comment: CULVERT UC-PP (10/24)

Solve For Full Flow Diameter

Given Input Data:

Slope.....	0.1600 ft/ft
Manning's n.....	0.020
Discharge.....	0.49 cfs

Computed Results:

Full Flow Diameter.....	0.33 ft
Full Flow Depth.....	0.33 ft
Velocity.....	5.66 fps
Flow Area.....	0.09 sf
Critical Depth....	0.33 ft
Critical Slope....	0.1443 ft/ft
Percent Full.....	100.00 %
Full Capacity.....	0.49 cfs
QMAX @.94D.....	0.53 cfs
Froude Number.....	FULL

Open Channel Flow Module, Version 3.43 (c) 1991
Haestad Methods, Inc. * 37 Brookside Rd * Waterbury, Ct 06708

Circular Channel Analysis & Design
Solved with Manning's Equation

Open Channel - Uniform flow

Worksheet Name: WEST RIDGE

Comment: CULVERT UC-PP (25/6)

Solve For Full Flow Diameter

Given Input Data:

Slope.....	0.1600 ft/ft
Manning's n.....	0.020
Discharge.....	0.33 cfs

Computed Results:

Full Flow Diameter.....	0.29 ft
Full Flow Depth.....	0.29 ft
Velocity.....	5.12 fps
Flow Area.....	0.06 sf
Critical Depth....	0.28 ft
Critical Slope....	0.1437 ft/ft
Percent Full.....	100.00 %
Full Capacity.....	0.33 cfs
QMAX @.94D.....	0.35 cfs
Froude Number.....	FULL

Open Channel Flow Module, Version 3.43 (c) 1991
Haestad Methods, Inc. * 37 Brookside Rd * Waterbury, Ct 06708

Circular Channel Analysis & Design
Solved with Manning's Equation

Open Channel - Uniform flow

Worksheet Name: WEST RIDGE

Comment: CULVERT UC-PP (100/6)

Solve For Full Flow Diameter

Given Input Data:

Slope.....	0.1600 ft/ft
Manning's n.....	0.020
Discharge.....	0.69 cfs

Computed Results:

Full Flow Diameter.....	0.38 ft
Full Flow Depth.....	0.38 ft
Velocity.....	6.16 fps
Flow Area.....	0.11 sf
Critical Depth....	0.37 ft
Critical Slope....	0.1448 ft/ft
Percent Full.....	100.00 %
Full Capacity.....	0.69 cfs
QMAX @.94D.....	0.74 cfs
Froude Number.....	FULL

Open Channel Flow Module, Version 3.43 (c) 1991
Haestad Methods, Inc. * 37 Brookside Rd * Waterbury, Ct 06708

Circular Channel Analysis & Design
Solved with Manning's Equation

Open Channel - Uniform flow

Worksheet Name: WEST RIDGE

Comment: CULVERT UC-RR (10/6)

Solve For Full Flow Diameter

Given Input Data:

Slope.....	0.0500 ft/ft
Manning's n.....	0.020
Discharge.....	0.04 cfs

Computed Results:

Full Flow Diameter.....	0.16 ft
Full Flow Depth.....	0.16 ft
Velocity.....	1.95 fps
Flow Area.....	0.02 sf
Critical Depth....	0.13 ft
Critical Slope....	0.0488 ft/ft
Percent Full.....	100.00 %
Full Capacity.....	0.04 cfs
QMAX @.94D.....	0.04 cfs
Froude Number.....	FULL

Circular Channel Analysis & Design
Solved with Manning's Equation

Open Channel - Uniform flow

Worksheet Name: WEST RIDGE

Comment: CULVERT UC-RR (10/24)

Solve For Full Flow Diameter

Given Input Data:

Slope.....	0.0500 ft/ft
Manning's n.....	0.020
Discharge.....	0.16 cfs

Computed Results:

Full Flow Diameter.....	0.27 ft
Full Flow Depth.....	0.27 ft
Velocity.....	2.76 fps
Flow Area.....	0.06 sf
Critical Depth....	0.23 ft
Critical Slope....	0.0462 ft/ft
Percent Full.....	100.00 %
Full Capacity.....	0.16 cfs
QMAX @.94D.....	0.17 cfs
Froude Number.....	FULL

Circular Channel Analysis & Design
Solved with Manning's Equation

Open Channel - Uniform flow

Worksheet Name: WEST RIDGE

Comment: CULVERT UC-RR (25/6)

Solve For Full Flow Diameter

Given Input Data:

Slope.....	0.0500 ft/ft
Manning's n.....	0.020
Discharge.....	0.11 cfs

Computed Results:

Full Flow Diameter.....	0.24 ft
Full Flow Depth.....	0.24 ft
Velocity.....	2.52 fps
Flow Area.....	0.04 sf
Critical Depth....	0.20 ft
Critical Slope....	0.0468 ft/ft
Percent Full.....	100.00 %
Full Capacity.....	0.11 cfs
QMAX @.94D.....	0.12 cfs
Froude Number.....	FULL

Circular Channel Analysis & Design
Solved with Manning's Equation

Open Channel - Uniform flow

Worksheet Name: WEST RIDGE

Comment: CULVERT UC-RR (100/6)

Solve For Full Flow Diameter

Given Input Data:

Slope.....	0.0500 ft/ft
Manning's n.....	0.020
Discharge.....	0.23 cfs

Computed Results:

Full Flow Diameter.....	0.31 ft
Full Flow Depth.....	0.31 ft
Velocity.....	3.03 fps
Flow Area.....	0.08 sf
Critical Depth....	0.27 ft
Critical Slope....	0.0457 ft/ft
Percent Full.....	100.00 %
Full Capacity.....	0.23 cfs
QMAX @.94D.....	0.25 cfs
Froude Number.....	FULL

Circular Channel Analysis & Design
Solved with Manning's Equation

Open Channel - Uniform flow

Worksheet Name: WEST RIDGE

Comment: CULVERT UC-AA

Solve For Full Flow Capacity

Given Input Data:

Diameter.....	3.50 ft
Slope.....	0.0700 ft/ft
Manning's n.....	0.020
Discharge.....	173.02 cfs

Computed Results:

Full Flow Capacity.....	173.02 cfs
Full Flow Depth.....	3.50 ft
Velocity.....	17.98 fps
Flow Area.....	9.62 sf
Critical Depth....	3.44 ft
Critical Slope....	0.0629 ft/ft
Percent Full.....	100.00 %
Full Capacity.....	173.02 cfs
QMAX @.94D.....	186.12 cfs
Froude Number.....	FULL

Open Channel Flow Module, Version 3.43 (c) 1991
Haestad Methods, Inc. * 37 Brookside Rd * Waterbury, Ct 06708

Circular Channel Analysis & Design
Solved with Manning's Equation

Open Channel - Uniform flow

Worksheet Name: WEST RIDGE

Comment: CULVERT UC-DD

Solve For Full Flow Capacity

Given Input Data:

Diameter.....	1.50 ft
Slope.....	0.2800 ft/ft
Manning's n.....	0.020
Discharge.....	36.13 cfs

Computed Results:

Full Flow Capacity.....	36.13 cfs
Full Flow Depth.....	1.50 ft
Velocity.....	20.45 fps
Flow Area.....	1.77 sf
Critical Depth....	1.50 ft
Critical Slope....	0.2694 ft/ft
Percent Full.....	100.00 %
Full Capacity.....	36.13 cfs
QMAX @.94D.....	38.86 cfs
Froude Number.....	FULL

Open Channel Flow Module, Version 3.43 (c) 1991
Haestad Methods, Inc. * 37 Brookside Rd * Waterbury, Ct 06706708

Circular Channel Analysis & Design
Solved with Manning's Equation

Open Channel - Uniform flow

Worksheet Name: WEST RIDGE

Comment: CULVERT UC-EE

Solve For Full Flow Capacity

Given Input Data:

Diameter.....	3.50 ft
Slope.....	0.0640 ft/ft
Manning's n.....	0.020
Discharge.....	165.44 cfs

Computed Results:

Full Flow Capacity.....	165.44 cfs
Full Flow Depth.....	3.50 ft
Velocity.....	17.20 fps
Flow Area.....	9.62 sf
Critical Depth....	3.42 ft
Critical Slope....	0.0571 ft/ft
Percent Full.....	100.00 %
Full Capacity.....	165.44 cfs
QMAX @.94D.....	177.97 cfs
Froude Number.....	FULL

Open Channel Flow Module, Version 3.43 (c) 1991
Haestad Methods, Inc. * 37 Brookside Rd * Waterbury, Ct 0670

Circular Channel Analysis & Design
Solved with Manning's Equation

Open Channel - Uniform flow

Worksheet Name: WEST RIDGE

Comment: CULVERT UC-FF

Solve For Full Flow Capacity

Given Input Data:

Diameter.....	1.50 ft
Slope.....	0.2000 ft/ft
Manning's n.....	0.020
Discharge.....	30.53 cfs

Computed Results:

Full Flow Capacity.....	30.53 cfs
Full Flow Depth.....	1.50 ft
Velocity.....	17.28 fps
Flow Area.....	1.77 sf
Critical Depth....	1.49 ft
Critical Slope....	0.1896 ft/ft
Percent Full.....	100.00 %
Full Capacity.....	30.53 cfs
QMAX @.94D.....	32.85 cfs
Froude Number.....	FULL

Open Channel Flow Module, Version 3.43 (c) 1991
Haestad Methods, Inc. * 37 Brookside Rd * Waterbury, Ct 06708

Circular Channel Analysis & Design
Solved with Manning's Equation

Open Channel - Uniform flow

Worksheet Name: WEST RIDGE

Comment: CULVERT UC-GG

Solve For Full Flow Capacity

Given Input Data:

Diameter.....	3.50 ft
Slope.....	0.0640 ft/ft
Manning's n.....	0.020
Discharge.....	165.44 cfs

Computed Results:

Full Flow Capacity.....	165.44 cfs
Full Flow Depth.....	3.50 ft
Velocity.....	17.20 fps
Flow Area.....	9.62 sf
Critical Depth....	3.42 ft
Critical Slope....	0.0571 ft/ft
Percent Full.....	100.00 %
Full Capacity.....	165.44 cfs
QMAX @.94D.....	177.97 cfs
Froude Number.....	FULL

Circular Channel Analysis & Design
Solved with Manning's Equation

Open Channel - Uniform flow

Worksheet Name: WEST RIDGE

Comment: CULVERT UC-HH

Solve For Full Flow Capacity

Given Input Data:

Diameter.....	2.00 ft
Slope.....	0.1020 ft/ft
Manning's n.....	0.020
Discharge.....	46.96 cfs

Computed Results:

Full Flow Capacity.....	46.96 cfs
Full Flow Depth.....	2.00 ft
Velocity.....	14.95 fps
Flow Area.....	3.14 sf
Critical Depth....	1.97 ft
Critical Slope....	0.0931 ft/ft
Percent Full.....	100.00 %
Full Capacity.....	46.96 cfs
QMAX @.94D.....	50.52 cfs
Froude Number.....	FULL

Open Channel Flow Module, Version 3.43 (c) 1991
Haestad Methods, Inc. * 37 Brookside Rd * Waterbury, Ct 06708

Circular Channel Analysis & Design
Solved with Manning's Equation

Open Channel - Uniform flow

Worksheet Name: WEST RIDGE

Comment: CULVERT UC-JJ

Solve For Full Flow Capacity

Given Input Data:

Diameter.....	1.50 ft
Slope.....	0.2720 ft/ft
Manning's n.....	0.020
Discharge.....	35.61 cfs

Computed Results:

Full Flow Capacity.....	35.61 cfs
Full Flow Depth.....	1.50 ft
Velocity.....	20.15 fps
Flow Area.....	1.77 sf
Critical Depth....	1.50 ft
Critical Slope....	0.2614 ft/ft
Percent Full.....	100.00 %
Full Capacity.....	35.61 cfs
QMAX @.94D.....	38.31 cfs
Froude Number.....	FULL

Open Channel Flow Module, Version 3.43 (c) 1991
Haestad Methods, Inc. * 37 Brookside Rd * Waterbury, Ct 06708

Circular Channel Analysis & Design
Solved with Manning's Equation

Open Channel - Uniform flow

Worksheet Name: WEST RIDGE

Comment: CULVERT UC-LL

Solve For Full Flow Capacity

Given Input Data:

Diameter.....	4.00 ft
Slope.....	0.0670 ft/ft
Manning's n.....	0.020
Discharge.....	241.68 cfs

Computed Results:

Full Flow Capacity.....	241.68 cfs
Full Flow Depth.....	4.00 ft
Velocity.....	19.23 fps
Flow Area.....	12.57 sf
Critical Depth....	3.93 ft
Critical Slope....	0.0602 ft/ft
Percent Full.....	100.00 %
Full Capacity.....	241.68 cfs
QMAX @.94D.....	259.97 cfs
Froude Number.....	FULL

Open Channel Flow Module, Version 3.43 (c) 1991
Haestad Methods, Inc. * 37 Brookside Rd * Waterbury, Ct 06708

Circular Channel Analysis & Design
Solved with Manning's Equation

Open Channel - Uniform flow

Worksheet Name: WEST RIDGE

Comment: CULVERT UC-MM

Solve For Full Flow Capacity

Given Input Data:

Diameter.....	1.50 ft
Slope.....	0.3600 ft/ft
Manning's n.....	0.020
Discharge.....	40.97 cfs

Computed Results:

Full Flow Capacity.....	40.97 cfs
Full Flow Depth.....	1.50 ft
Velocity.....	23.18 fps
Flow Area.....	1.77 sf
Critical Depth....	1.50 ft
Critical Slope....	0.3493 ft/ft
Percent Full.....	100.00 %
Full Capacity.....	40.97 cfs
QMAX @.94D.....	44.07 cfs
Froude Number.....	FULL

Circular Channel Analysis & Design
Solved with Manning's Equation

Open Channel - Uniform flow

Worksheet Name: WEST RIDGE

Comment: CULVERT UC-NN

Solve For Full Flow Capacity

Given Input Data:

Diameter.....	4.00 ft
Slope.....	0.0670 ft/ft
Manning's n.....	0.020
Discharge.....	241.68 cfs

Computed Results:

Full Flow Capacity.....	241.68 cfs
Full Flow Depth.....	4.00 ft
Velocity.....	19.23 fps
Flow Area.....	12.57 sf
Critical Depth....	3.93 ft
Critical Slope....	0.0602 ft/ft
Percent Full.....	100.00 %
Full Capacity.....	241.68 cfs
QMAX @.94D.....	259.97 cfs
Froude Number.....	FULL

Open Channel Flow Module, Version 3.43 (c) 1991
Haestad Methods, Inc. * 37 Brookside Rd * Waterbury, Ct 06708

Circular Channel Analysis & Design
Solved with Manning's Equation

Open Channel - Uniform flow

Worksheet Name: WEST RIDGE

Comment: CULVERT UC-OO

Solve For Full Flow Capacity

Given Input Data:

Diameter.....	4.00 ft
Slope.....	0.0480 ft/ft
Manning's n.....	0.020
Discharge.....	204.56 cfs

Computed Results:

Full Flow Capacity.....	204.56 cfs
Full Flow Depth.....	4.00 ft
Velocity.....	16.28 fps
Flow Area.....	12.57 sf
Critical Depth....	3.86 ft
Critical Slope....	0.0420 ft/ft
Percent Full.....	100.00 %
Full Capacity.....	204.56 cfs
QMAX @.94D.....	220.05 cfs
Froude Number.....	FULL

Open Channel Flow Module, Version 3.43 (c) 1991
Haestad Methods, Inc. * 37 Brookside Rd * Waterbury, Ct 06708

Circular Channel Analysis & Design
Solved with Manning's Equation

Open Channel - Uniform flow

Worksheet Name: WEST RIDGE

Comment: CULVERT UC-PP

Solve For Full Flow Capacity

Given Input Data:

Diameter.....	1.50 ft
Slope.....	0.1600 ft/ft
Manning's n.....	0.020
Discharge.....	27.31 cfs

Computed Results:

Full Flow Capacity.....	27.31 cfs
Full Flow Depth.....	1.50 ft
Velocity.....	15.46 fps
Flow Area.....	1.77 sf
Critical Depth....	1.49 ft
Critical Slope....	0.1497 ft/ft
Percent Full.....	100.00 %
Full Capacity.....	27.31 cfs
QMAX @.94D.....	29.38 cfs
Froude Number.....	FULL

Open Channel Flow Module, Version 3.43 (c) 1991
Haestad Methods, Inc. * 37 Brookside Rd * Waterbury, Ct 06708

Circular Channel Analysis & Design
Solved with Manning's Equation

Open Channel - Uniform flow

Worksheet Name: WEST RIDGE

Comment: CULVERT UC-RR

Solve For Full Flow Capacity

Given Input Data:

Diameter.....	0.75 ft
Slope.....	0.0500 ft/ft
Manning's n.....	0.020
Discharge.....	2.40 cfs

Computed Results:

Full Flow Capacity.....	2.40 cfs
Full Flow Depth.....	0.75 ft
Velocity.....	5.44 fps
Flow Area.....	0.44 sf
Critical Depth....	0.69 ft
Critical Slope....	0.0436 ft/ft
Percent Full.....	100.00 %
Full Capacity.....	2.40 cfs
QMAX @.94D.....	2.59 cfs
Froude Number.....	FULL

UNDISTURBED DITCH

CALCULATIONS

Title of run: UD-Z (10/6)

Solving for.....= Depth Normal

Triangle

Flow depth (ft).....=	0.14
First Side slope.....=	2.0
Second Side slope.....=	2.0
Slope of diversion.....=	0.1600
Manning"s n.....=	0.035
CFS.....=	0.11
Cross section area (sqft)..=	0.04
Hydrualic radius.....=	0.06
fps.....=	2.71
Froude number.....=	1.90

Title of run: UD-Z (10/24)

Solving for.....= Depth Normal

Triangle

Flow depth (ft).....=	0.25
First Side slope.....=	2.0
Second Side slope.....=	2.0
Slope of diversion.....=	0.1600
Manning"s n.....=	0.035
CFS.....=	0.49
Cross section area (sqft)..=	0.12
Hydrualic radius.....=	0.11
fps.....=	3.94
Froude number.....=	2.08

Title of run: UD-15 (10/6)

```
   Solving for................= Depth Normal
Triangle
   Flow depth (ft)............=    0.38
   First Side slope...........=     2.0
   Second Side slope..........=     2.0
   Slope of diversion.........=  0.0760
   Manning"s n................=   0.035
   CFS........................=    1.05
   Cross section area (sqft)..=    0.29
   Hydrualic radius...........=    0.17
   fps........................=    3.61
   Froude number..............=    1.54
```

Title of run: UD-15 (10/24)

```
   Solving for................= Depth Normal
iangle
   Flow depth (ft)............=    0.59
   First Side slope...........=     2.0
   Second Side slope..........=     2.0
   Slope of diversion.........=  0.0760
   Manning"s n................=   0.035
   CFS........................=    3.43
   Cross section area (sqft)..=    0.71
   Hydrualic radius...........=    0.27
   fps........................=    4.85
   Froude number..............=    1.66
```

DISTURBED DITCH

CALCULATIONS

Title of run: DD-1 (10/24)

```
Solving for................= Depth Normal
angle
Flow depth (ft)............=    0.77
First Side slope...........=     2.0
Second Side slope..........=     2.0
Slope of diversion.........=  0.0830
Manning"s n................=   0.035
CFS........................=    7.13
Cross section area (sqft)..=    1.18
Hydrualic radius...........=    0.34
fps........................=    6.02
Froude number..............=    1.81
```

Title of run: DD-2 (10/6)

Solving for.....= Depth Normal

Triangle

Flow depth (ft).....= 0.70

First Side slope.....= 2.0

Second Side slope.....= 2.0

Slope of diversion.....= 0.0270

Manning"s n.....= 0.035

CFS.....= 3.22

Cross section area (sqft)..= 0.99

Hydrualic radius.....= 0.32

fps.....= 3.24

Froude number.....= 1.02

Title of run: DD-2 (10/24)

Solving for.....= Depth Normal

Triangle

Flow depth (ft).....= 1.17

First Side slope.....= 2.0

Second Side slope.....= 2.0

Slope of diversion.....= 0.0270

Manning"s n.....= 0.035

CFS.....= 12.52

Cross section area (sqft)..= 2.75

Hydrualic radius.....= 0.52

fps.....= 4.55

Froude number.....= 1.11

Title of run: DD-3 (10/6)

```
   Solving for................= Depth Normal
Triangle
   Flow depth (ft)............=    0.44
   First Side slope...........=     2.0
   Second Side slope..........=     2.0
   Slope of diversion.........=  0.0450
   Manning"s n................=   0.035
   CFS........................=    1.18
   Cross section area (sqft)..=    0.39
   Hydrualic radius...........=    0.20
   fps........................=    3.05
   Froude number..............=    1.21
```

Title of run: DD-3 (10/24)

Solving for.....=	Depth Normal
angle	
low depth (ft).....=	0.71
First Side slope.....=	2.0
Second Side slope.....=	2.0
Slope of diversion.....=	0.0450
Manning"s n.....=	0.035
CFS.....=	4.30
Cross section area (sqft)..=	1.02
Hydrualic radius.....=	0.32
fps.....=	4.22
Froude number.....=	1.32

Title of run: DD-4 (10/6)

```
   Solving for................= Depth Normal
Triangle
   Flow depth (ft)............=    0.71
   First Side slope...........=     2.0
   Second Side slope..........=     2.0
   Slope of diversion.........=  0.0630
   Manning"s n................=   0.035
   CFS........................=    5.08
   Cross section area (sqft)..=    1.02
   Hydrualic radius...........=    0.32
   fps........................=    4.99
   Froude number..............=    1.56
```

Title of run: DD-4 (10/24) EN.DIS.

Solving for.....= Depth Normal

Triangle

Flow depth (ft).....	1.24
First Side slope.....	2.0
Second Side slope.....	2.0
Slope of diversion.....	0.0570
Manning"s n.....	0.040
CFS.....	18.32
Cross section area (sqft)..	3.06
Hydrualic radius.....	0.55
fps.....	5.99
Froude number.....	1.42

INCORPORATED

MAY 14 2002

DIV OF OIL GAS & MINING

Title of run: DD-4a (10/6)

```
   Solving for................= Depth Normal
Triangle
   Flow depth (ft)............=    0.39
   First Side slope...........=     2.0
   Second Side slope..........=     2.0
   Slope of diversion.........=  0.0290
   Manning"s n................=   0.035
   CFS........................=    0.69
   Cross section area (sqft)..=    0.30
   Hydrualic radius...........=    0.17
   fps........................=    2.26
   Froude number..............=    0.96
```

Title of run: DD-4a (10/24)

```
   Solving for................= Depth Normal
angle
   Flow depth (ft)............=    0.53
   First Side slope...........=     2.0
   Second Side slope..........=     2.0
   Slope of diversion.........=  0.0290
   Manning"s n................=   0.035
   CFS........................=    1.56
   Cross section area (sqft)..=    0.56
   Hydrualic radius...........=    0.24
   fps........................=    2.78
   Froude number..............=    1.01
```

Title of run: DD-5 (10/6)

```
   Solving for................= Depth Normal
   ngle
   low depth (ft).............=    0.55
   First Side slope...........=     2.0
   Second Side slope..........=     2.0
   Slope of diversion.........=  0.0160
   Manning"s n................=   0.035
   CFS........................=    1.26
   Cross section area (sqft)..=    0.60
   Hydrualic radius...........=    0.24
   fps........................=    2.11
   Froude number..............=    0.75
```

Title of run: DD-5 (10/24)

```
   Solving for................= Depth Normal
   iangle
   Flow depth (ft)............=    0.74
   First Side slope...........=     2.0
   Second Side slope..........=     2.0
   Slope of diversion.........=  0.0160
   Manning"s n................=   0.035
   CFS........................=    2.81
   Cross section area (sqft)..=    1.09
   Hydrualic radius...........=    0.33
   fps........................=    2.57
   Froude number..............=    0.79
```

Title of run: DD-6 (10/6)

Solving for.....= Depth Normal

Triangle

Flow depth (ft).....=	0.57
First Side slope.....=	2.0
Second Side slope.....=	2.0
Slope of diversion.....=	0.0630
Manning"s n.....=	0.015
CFS.....=	6.62
Cross section area (sqft)..=	0.66
Hydrualic radius.....=	0.26
fps.....=	10.06
Froude number.....=	3.50

Title of run: DD-6 (10/24) B.RK.

Solving for.....= Depth Normal

Triangle

Flow depth (ft).....	1.16
First Side slope.....	2.0
Second Side slope.....	2.0
Slope of diversion.....	0.0630
Manning"s n.....	0.030
CFS.....	21.74
Cross section area (sqft)..	2.70
Hydrualic radius.....	0.52
fps.....	8.06
Froude number.....	1.97

INCORPORATED

MAY 14 2002

DIV OF OIL GAS & MINING

Title of run: DD-8 (10/6)

```
   Solving for................= Depth Normal
iangle
   Flow depth (ft)............=    0.30
   First Side slope...........=     2.0
   Second Side slope..........=     2.0
   Slope of diversion.........=  0.1120
   Manning"s n................=   0.035
   CFS........................=    0.68
   Cross section area (sqft)..=    0.18
   Hydrualic radius...........=    0.13
   fps........................=    3.74
   Froude number..............=    1.80
```

Title of run: DD-8 (10/24)

```
Solving for................= Depth Normal
angle
Flow depth (ft)............=    0.42
First Side slope...........=     2.0
Second Side slope..........=     2.0
Slope of diversion.........=  0.1120
Manning"s n................=   0.035
CFS........................=    1.69
Cross section area (sqft)..=    0.36
Hydrualic radius...........=    0.19
fps........................=    4.70
Froude number..............=    1.90
```

Title of run: DD-8A (10/6)

Solving for.....= Depth Normal

Triangle

Flow depth (ft).....= 0.77

First Side slope.....= 2.0

Second Side slope.....= 2.0

Slope of diversion.....= 0.0870

Manning"s n.....= 0.035

CFS.....= 7.30

Cross section area (sqft)..= 1.18

Hydrualic radius.....= 0.34

fps.....= 6.17

Froude number.....= 1.85

Title of run: DD-8A (10/24)

```
   Solving for................= Depth Normal
Triangle
   Flow depth (ft)............=    1.19
   First Side slope...........=     2.0
   Second Side slope..........=     2.0
   Slope of diversion.........=  0.0870
   Manning"s n................=   0.035
   CFS........................=   23.43
   Cross section area (sqft)..=    2.84
   Hydrualic radius...........=    0.53
   fps........................=    8.25
   Froude number..............=    1.99
```

Title of run: DD-9 (10/6)

Solving for.....=	Depth Normal
Triangle	
Flow depth (ft).....=	0.42
First Side slope.....=	2.0
Second Side slope.....=	2.0
Slope of diversion.....=	0.0630
Manning"s n.....=	0.035
CFS.....=	1.26
Cross section area (sqft)..=	0.36
Hydrualic radius.....=	0.19
fps.....=	3.52
Froude number.....=	1.43

Title of run: DD-9 (10/24)

```
Solving for................= Depth Normal
angle
Flow depth (ft)............=    0.58
First Side slope...........=     2.0
Second Side slope..........=     2.0
Slope of diversion.........=  0.0630
Manning"s n................=   0.035
CFS........................=    2.86
Cross section area (sqft)..=    0.66
Hydrualic radius...........=    0.26
fps........................=    4.32
Froude number..............=    1.50
```

Title of run: DD-10 (10/6)

```
Solving for................= Depth Normal
angle
Flow depth (ft)............=    0.69
First Side slope...........=     2.0
Second Side slope..........=     2.0
Slope of diversion.........=  0.0200
Manning"s n................=   0.035
CFS........................=    2.58
Cross section area (sqft)..=    0.94
Hydrualic radius...........=    0.31
fps........................=    2.74
Froude number..............=    0.87
```

Title of run: DD-10 (10/24)

```
   Solving for................= Depth Normal
iangle
   Flow depth (ft)............=    1.02
   First Side slope...........=     2.0
   Second Side slope..........=     2.0
   Slope of diversion.........=  0.0200
   Manning"s n................=   0.035
   CFS........................=    7.44
   Cross section area (sqft)..=    2.08
   Hydrualic radius...........=    0.46
   fps........................=    3.57
   Froude number..............=    0.93
```

Title of run: DD-11 (10/6)

Solving for.....= Depth Normal

Triangle

Flow depth (ft).....= 1.07

First Side slope.....= 2.0

Second Side slope.....= 2.0

Slope of diversion.....= 0.0160

Manning"s n.....= 0.035

CFS.....= 7.58

Cross section area (sqft)..= 2.30

Hydrualic radius.....= 0.48

fps.....= 3.30

Froude number.....= 0.84

Title of run: DD-11 (10/24)

```
Solving for................= Depth Normal
angle
Flow depth (ft)............=    1.65
First Side slope...........=     2.0
Second Side slope..........=     2.0
Slope of diversion.........=  0.0160
Manning"s n................=   0.035
CFS........................=   24.05
Cross section area (sqft)..=    5.46
Hydrualic radius...........=    0.74
fps........................=    4.40
Froude number..............=    0.90
```

Title of run: DD-12 (10/6)

Solving for.....=	Depth Normal
angle	
low depth (ft).....=	0.71
First Side slope.....=	2.0
Second Side slope.....=	2.0
Slope of diversion.....=	0.0420
Manning"s n.....=	0.035
CFS.....=	4.11
Cross section area (sqft)..=	1.01
Hydrualic radius.....=	0.32
fps.....=	4.07
Froude number.....=	1.27

Title of run: DD-12 (10/24)

```
   Solving for................= Depth Normal
   angle
   Flow depth (ft)............=    1.11
   First Side slope...........=     2.0
   Second Side slope..........=     2.0
   Slope of diversion.........=  0.0420
   Manning"s n................=   0.035
   CFS........................=   13.51
   Cross section area (sqft)..=    2.47
   Hydrualic radius...........=    0.50
   fps........................=    5.47
   Froude number..............=    1.37
```

Title of run: DD-13 (10/6)

```
   Solving for................= Depth Normal
angle
   Flow depth (ft)............=    0.31
   First Side slope...........=     2.0
   Second Side slope..........=     2.0
   Slope of diversion.........=  0.0170
   Manning"s n................=   0.035
   CFS........................=    0.28
   Cross section area (sqft)..=    0.19
   Hydrualic radius...........=    0.14
   fps........................=    1.48
   Froude number..............=    0.70
```

Title of run: DD-13 (10/24)

Solving for.....= Depth Normal

iangle

Flow depth (ft).....= 0.41

First Side slope.....= 2.0

Second Side slope.....= 2.0

Slope of diversion.....= 0.0170

Manning"s n.....= 0.035

CFS.....= 0.61

Cross section area (sqft)..= 0.34

Hydrualic radius.....= 0.18

fps.....= 1.80

Froude number.....= 0.74

DISTURBED CULVERT

CALCULATIONS

Circular Channel Analysis & Design
Solved with Manning's Equation

Open Channel - Uniform flow

Worksheet Name: WEST RIDGE

Comment: CULVERT DC-2 (10/6)

Solve For Full Flow Diameter

Given Input Data:

Slope.....	0.0200 ft/ft
Manning's n.....	0.020
Discharge.....	4.40 cfs

Computed Results:

Full Flow Diameter.....	1.12 ft
Full Flow Depth.....	1.12 ft
Velocity.....	4.49 fps
Flow Area.....	0.98 sf
Critical Depth....	0.87 ft
Critical Slope....	0.0219 ft/ft
Percent Full.....	100.00 %
Full Capacity.....	4.40 cfs
QMAX @.94D.....	4.73 cfs
Froude Number.....	FULL

Open Channel Flow Module, Version 3.43 (c) 1991
Haestad Methods, Inc. * 37 Brookside Rd * Waterbury, Ct 06708

Circular Channel Analysis & Design
Solved with Manning's Equation

Open Channel - Uniform flow

Worksheet Name: WEST RIDGE

Comment: CULVERT DC-2 (10/24)

Solve For Full Flow Diameter

Given Input Data:

Slope.....	0.0200 ft/ft
Manning's n.....	0.020
Discharge.....	16.82 cfs

Computed Results:

Full Flow Diameter.....	1.85 ft
Full Flow Depth.....	1.85 ft
Velocity.....	6.28 fps
Flow Area.....	2.68 sf
Critical Depth....	1.50 ft
Critical Slope....	0.0203 ft/ft
Percent Full.....	100.00 %
Full Capacity.....	16.82 cfs
QMAX @.94D.....	18.09 cfs
Froude Number.....	FULL

Open Channel Flow Module, Version 3.43 (c) 1991
Haestad Methods, Inc. * 37 Brookside Rd * Waterbury, Ct 06708

Worksheet Name: WEST RIDGE

Comment: CULVERT DC-4A (10/6)

Solve For Full Flow Diameter

Given Input Data:

Slope.....	0.0600 ft/ft
Manning's n.....	0.020
Discharge.....	0.69 cfs

Computed Results:

Full Flow Diameter.....	0.45 ft
Full Flow Depth.....	0.45 ft
Velocity.....	4.27 fps
Flow Area.....	0.16 sf
Critical Depth....	0.42 ft
Critical Slope....	0.0522 ft/ft
Percent Full.....	100.00 %
Full Capacity.....	0.69 cfs
QMAX @.94D.....	0.74 cfs
Froude Number.....	FULL

Open Channel Flow Module, Version 3.43 (c) 1991
Haestad Methods, Inc. * 37 Brookside Rd * Waterbury, Ct 06708

Circular Channel Analysis & Design
Solved with Manning's Equation

Open Channel - Uniform flow

Worksheet Name: WEST RIDGE

Comment: CULVERT DC-4A (10/24)

Solve For Full Flow Diameter

Given Input Data:

Slope.....	0.0600 ft/ft
Manning's n.....	0.020
Discharge.....	1.56 cfs

Computed Results:

Full Flow Diameter.....	0.62 ft
Full Flow Depth.....	0.62 ft
Velocity.....	5.23 fps
Flow Area.....	0.30 sf
Critical Depth....	0.57 ft
Critical Slope....	0.0519 ft/ft
Percent Full.....	100.00 %
Full Capacity.....	1.56 cfs
QMAX @.94D.....	1.68 cfs
Froude Number.....	FULL

Circular Channel Analysis & Design
Solved with Manning's Equation

Open Channel - Uniform flow

Circular Channel Analysis & Design
Solved with Manning's Equation

Open Channel - Uniform flow

Worksheet Name: WEST RIDGE

Comment: CULVERT DC-5 (10/6)

Solve For Full Flow Diameter

Given Input Data:

Slope.....	0.0200 ft/ft
Manning's n.....	0.020
Discharge.....	0.57 cfs

Computed Results:

Full Flow Diameter.....	0.52 ft
Full Flow Depth.....	0.52 ft
Velocity.....	2.69 fps
Flow Area.....	0.21 sf
Critical Depth....	0.38 ft
Critical Slope....	0.0253 ft/ft
Percent Full.....	100.00 %
Full Capacity.....	0.57 cfs
QMAX @.94D.....	0.61 cfs
Froude Number.....	FULL

Open Channel Flow Module, Version 3.43 (c) 1991
Haestad Methods, Inc. * 37 Brookside Rd * Waterbury, Ct 06708

Circular Channel Analysis & Design
Solved with Manning's Equation

Open Channel - Uniform flow

Worksheet Name: WEST RIDGE

Comment: CULVERT DC-5 (10/24)

Solve For Full Flow Diameter

Given Input Data:

Slope.....	0.0200 ft/ft
Manning's n.....	0.020
Discharge.....	1.25 cfs

Computed Results:

Full Flow Diameter.....	0.70 ft
Full Flow Depth.....	0.70 ft
Velocity.....	3.28 fps
Flow Area.....	0.38 sf
Critical Depth....	0.52 ft
Critical Slope....	0.0238 ft/ft
Percent Full.....	100.00 %
Full Capacity.....	1.25 cfs
QMAX @.94D.....	1.34 cfs
Froude Number.....	FULL

Circular Channel Analysis & Design
Solved with Manning's Equation

Open Channel - Uniform flow

Worksheet Name: WEST RIDGE

Comment: CULVERT DC-6 (10/6)

Solve For Full Flow Diameter

Given Input Data:

Slope.....	0.0200 ft/ft
Manning's n.....	0.020
Discharge.....	1.26 cfs

Computed Results:

Full Flow Diameter.....	0.70 ft
Full Flow Depth.....	0.70 ft
Velocity.....	3.28 fps
Flow Area.....	0.38 sf
Critical Depth....	0.53 ft
Critical Slope....	0.0238 ft/ft
Percent Full.....	100.00 %
Full Capacity.....	1.26 cfs
QMAX @.94D.....	1.36 cfs
Froude Number.....	FULL

Open Channel Flow Module, Version 3.43 (c) 1991
Haestad Methods, Inc. * 37 Brookside Rd * Waterbury, Ct 06708

Circular Channel Analysis & Design
Solved with Manning's Equation

Open Channel - Uniform flow

Worksheet Name: WEST RIDGE

Comment: CULVERT DC-6 (10/24)

Solve For Full Flow Diameter

Given Input Data:

Slope.....	0.0200 ft/ft
Manning's n.....	0.020
Discharge.....	2.81 cfs

Computed Results:

Full Flow Diameter.....	0.94 ft
Full Flow Depth.....	0.94 ft
Velocity.....	4.01 fps
Flow Area.....	0.70 sf
Critical Depth....	0.73 ft
Critical Slope....	0.0226 ft/ft
Percent Full.....	100.00 %
Full Capacity.....	2.81 cfs
QMAX @.94D.....	3.02 cfs
Froude Number.....	FULL

Open Channel Flow Module, Version 3.43 (c) 1991
Haestad Methods, Inc. * 37 Brookside Rd * Waterbury, Ct 06708

Circular Channel Analysis & Design
Solved with Manning's Equation

Open Channel - Uniform flow

Worksheet Name: WEST RIDGE

Comment: CULVERT DC-7 (10/6)

Solve For Full Flow Diameter

Given Input Data:

Slope.....	0.0200 ft/ft
Manning's n.....	0.020
Discharge.....	7.30 cfs

Computed Results:

Full Flow Diameter.....	1.35 ft
Full Flow Depth.....	1.35 ft
Velocity.....	5.10 fps
Flow Area.....	1.43 sf
Critical Depth....	1.07 ft
Critical Slope....	0.0213 ft/ft
Percent Full.....	100.00 %
Full Capacity.....	7.30 cfs
QMAX @.94D.....	7.85 cfs
Froude Number.....	FULL

Open Channel Flow Module, Version 3.43 (c) 1991
Haestad Methods, Inc. * 37 Brookside Rd * Waterbury, Ct 06708

Circular Channel Analysis & Design
Solved with Manning's Equation

Open Channel - Uniform flow

Worksheet Name: WEST RIDGE

Comment: CULVERT DC-7 (10/24)

Solve For Full Flow Diameter

Given Input Data:

Slope.....	0.0200 ft/ft
Manning's n.....	0.020
Discharge.....	23.43 cfs

Computed Results:

Full Flow Diameter.....	2.09 ft
Full Flow Depth.....	2.09 ft
Velocity.....	6.82 fps
Flow Area.....	3.44 sf
Critical Depth....	1.72 ft
Critical Slope....	0.0200 ft/ft
Percent Full.....	100.00 %
Full Capacity.....	23.43 cfs
QMAX @.94D.....	25.20 cfs
Froude Number.....	FULL

Circular Channel Analysis & Design
Solved with Manning's Equation

Open Channel - Uniform flow

Worksheet Name: WEST RIDGE

Comment: CULVERT DC-8 (10/6)

Solve For Full Flow Diameter

Given Input Data:

Slope.....	0.1000 ft/ft
Manning's n.....	0.020
Discharge.....	0.62 cfs

Computed Results:

Full Flow Diameter.....	0.40 ft
Full Flow Depth.....	0.40 ft
Velocity.....	5.03 fps
Flow Area.....	0.12 sf
Critical Depth....	0.38 ft
Critical Slope....	0.0873 ft/ft
Percent Full.....	100.00 %
Full Capacity.....	0.62 cfs
QMAX @.94D.....	0.67 cfs
Froude Number.....	FULL

Open Channel Flow Module, Version 3.43 (c) 1991
Haestad Methods, Inc. * 37 Brookside Rd * Waterbury, Ct 06708

Circular Channel Analysis & Design
Solved with Manning's Equation

Open Channel - Uniform flow

Worksheet Name: WEST RIDGE

Comment: CULVERT DC-8 (10/24)

Solve For Full Flow Diameter

Given Input Data:

Slope.....	0.1000 ft/ft
Manning's n.....	0.020
Discharge.....	1.37 cfs

Computed Results:

Full Flow Diameter.....	0.53 ft
Full Flow Depth.....	0.53 ft
Velocity.....	6.13 fps
Flow Area.....	0.22 sf
Critical Depth....	0.52 ft
Critical Slope....	0.0879 ft/ft
Percent Full.....	100.00 %
Full Capacity.....	1.37 cfs
QMAX @.94D.....	1.47 cfs
Froude Number.....	FULL

Open Channel Flow Module, Version 3.43 (c) 1991
Haestad Methods, Inc. * 37 Brookside Rd * Waterbury, Ct 06708

Circular Channel Analysis & Design
Solved with Manning's Equation

Open Channel - Uniform flow

Worksheet Name: WEST RIDGE

Comment: CULVERT DC-8A (10/6)

Solve For Full Flow Diameter

Given Input Data:

Slope.....	0.1600 ft/ft
Manning's n.....	0.020
Discharge.....	7.30 cfs

Computed Results:

Full Flow Diameter.....	0.91 ft
Full Flow Depth.....	0.91 ft
Velocity.....	11.11 fps
Flow Area.....	0.66 sf
Critical Depth....	0.91 ft
Critical Slope....	0.1481 ft/ft
Percent Full.....	100.00 %
Full Capacity.....	7.30 cfs
QMAX @.94D.....	7.85 cfs
Froude Number.....	FULL

Circular Channel Analysis & Design
Solved with Manning's Equation

Open Channel - Uniform flow

Worksheet Name: WEST RIDGE

Comment: CULVERT DC-8A (10/24)

Solve For Full Flow Diameter

Given Input Data:

Slope.....	0.1600 ft/ft
Manning's n.....	0.020
Discharge.....	23.43 cfs

Computed Results:

Full Flow Diameter.....	1.42 ft
Full Flow Depth.....	1.42 ft
Velocity.....	14.87 fps
Flow Area.....	1.58 sf
Critical Depth....	1.41 ft
Critical Slope....	0.1495 ft/ft
Percent Full.....	100.00 %
Full Capacity.....	23.43 cfs
QMAX @.94D.....	25.20 cfs
Froude Number.....	FULL

Circular Channel Analysis & Design
Solved with Manning's Equation

Open Channel - Uniform flow

Worksheet Name: WEST RIDGE

Comment: CULVERT DC-9 (10/6)

Solve For Full Flow Diameter

Given Input Data:

Slope.....	0.2500 ft/ft
Manning's n.....	0.020
Discharge.....	1.26 cfs

Computed Results:

Full Flow Diameter.....	0.44 ft
Full Flow Depth.....	0.44 ft
Velocity.....	8.47 fps
Flow Area.....	0.15 sf
Critical Depth....	0.43 ft
Critical Slope....	0.2344 ft/ft
Percent Full.....	100.00 %
Full Capacity.....	1.26 cfs
QMAX @.94D.....	1.36 cfs
Froude Number.....	FULL

Open Channel Flow Module, Version 3.43 (c) 1991
Haestad Methods, Inc. * 37 Brookside Rd * Waterbury, Ct 06708

Circular Channel Analysis & Design
Solved with Manning's Equation

Open Channel - Uniform flow

Worksheet Name: WEST RIDGE

Comment: CULVERT DC-9 (10/24)

Solve For Full Flow Diameter

Given Input Data:

Slope.....	0.2500 ft/ft
Manning's n.....	0.020
Discharge.....	2.86 cfs

Computed Results:

Full Flow Diameter.....	0.59 ft
Full Flow Depth.....	0.59 ft
Velocity.....	10.39 fps
Flow Area.....	0.28 sf
Critical Depth....	0.59 ft
Critical Slope....	0.2358 ft/ft
Percent Full.....	100.00 %
Full Capacity.....	2.86 cfs
QMAX @.94D.....	3.08 cfs
Froude Number.....	FULL

Open Channel Flow Module, Version 3.43 (c) 1991
Haestad Methods, Inc. * 37 Brookside Rd * Waterbury, Ct 06708

Circular Channel Analysis & Design
Solved with Manning's Equation

Open Channel - Uniform flow

Worksheet Name: WEST RIDGE

Comment: CULVERT DC-10 (10/6)

Solve For Full Flow Diameter

Given Input Data:

Slope.....	0.2500 ft/ft
Manning's n.....	0.020
Discharge.....	2.58 cfs

Computed Results:

Full Flow Diameter.....	0.57 ft
Full Flow Depth.....	0.57 ft
Velocity.....	10.13 fps
Flow Area.....	0.25 sf
Critical Depth....	0.57 ft
Critical Slope....	0.2357 ft/ft
Percent Full.....	100.00 %
Full Capacity.....	2.58 cfs
QMAX @.94D.....	2.78 cfs
Froude Number.....	FULL

Circular Channel Analysis & Design
Solved with Manning's Equation

Open Channel - Uniform flow

Worksheet Name: WEST RIDGE

Comment: CULVERT DC-10 (10/24)

Solve For Full Flow Diameter

Given Input Data:

Slope.....	0.2500 ft/ft
Manning's n.....	0.020
Discharge.....	7.44 cfs

Computed Results:

Full Flow Diameter.....	0.85 ft
Full Flow Depth.....	0.85 ft
Velocity.....	13.20 fps
Flow Area.....	0.56 sf
Critical Depth....	0.84 ft
Critical Slope....	0.2373 ft/ft
Percent Full.....	100.00 %
Full Capacity.....	7.44 cfs
QMAX @.94D.....	8.00 cfs
Froude Number.....	FULL

Circular Channel Analysis & Design
Solved with Manning's Equation

Open Channel - Uniform flow

Worksheet Name: WEST RIDGE

Comment: CULVERT DC-10A (10/6)

Solve For Full Flow Diameter

Given Input Data:

Slope.....	0.2000 ft/ft
Manning's n.....	0.020
Discharge.....	2.58 cfs

Computed Results:

Full Flow Diameter.....	0.59 ft
Full Flow Depth.....	0.59 ft
Velocity.....	9.32 fps
Flow Area.....	0.28 sf
Critical Depth....	0.59 ft
Critical Slope....	0.1861 ft/ft
Percent Full.....	100.00 %
Full Capacity.....	2.58 cfs
QMAX @.94D.....	2.78 cfs
Froude Number.....	FULL

Open Channel Flow Module, Version 3.43 (c) 1991
Haestad Methods, Inc. * 37 Brookside Rd * Waterbury, Ct 06708

Circular Channel Analysis & Design
Solved with Manning's Equation

Open Channel - Uniform flow

Worksheet Name: WEST RIDGE

Comment: CULVERT DC-10A (10/24)

Solve For Full Flow Diameter

Given Input Data:

Slope.....	0.2000 ft/ft
Manning's n.....	0.020
Discharge.....	7.44 cfs

Computed Results:

Full Flow Diameter.....	0.88 ft
Full Flow Depth.....	0.88 ft
Velocity.....	12.14 fps
Flow Area.....	0.61 sf
Critical Depth....	0.88 ft
Critical Slope....	0.1877 ft/ft
Percent Full.....	100.00 %
Full Capacity.....	7.44 cfs
QMAX @.94D.....	8.00 cfs
Froude Number.....	FULL

Open Channel Flow Module, Version 3.43 (c) 1991
Haestad Methods, Inc. * 37 Brookside Rd * Waterbury, Ct 06708

Circular Channel Analysis & Design
Solved with Manning's Equation

Open Channel - Uniform flow

Worksheet Name: WEST RIDGE

Comment: CULVERT DC-11 (10/6)

Solve For Full Flow Diameter

Given Input Data:

Slope.....	0.0500 ft/ft
Manning's n.....	0.020
Discharge.....	7.58 cfs

Computed Results:

Full Flow Diameter.....	1.15 ft
Full Flow Depth.....	1.15 ft
Velocity.....	7.25 fps
Flow Area.....	1.05 sf
Critical Depth....	1.07 ft
Critical Slope....	0.0432 ft/ft
Percent Full.....	100.00 %
Full Capacity.....	7.58 cfs
QMAX @.94D.....	8.15 cfs
Froude Number.....	FULL

Open Channel Flow Module, Version 3.43 (c) 1991
Haestad Methods, Inc. * 37 Brookside Rd * Waterbury, Ct 06708

Circular Channel Analysis & Design
Solved with Manning's Equation

Open Channel - Uniform flow

Worksheet Name: WEST RIDGE

Comment: CULVERT DC-11 (10/24)

Solve For Full Flow Diameter

Given Input Data:

Slope.....	0.0500 ft/ft
Manning's n.....	0.020
Discharge.....	24.05 cfs

Computed Results:

Full Flow Diameter.....	1.78 ft
Full Flow Depth.....	1.78 ft
Velocity.....	9.68 fps
Flow Area.....	2.48 sf
Critical Depth....	1.68 ft
Critical Slope....	0.0433 ft/ft
Percent Full.....	100.00 %
Full Capacity.....	24.05 cfs
QMAX @.94D.....	25.87 cfs
Froude Number.....	FULL

Open Channel Flow Module, Version 3.43 (c) 1991
Haestad Methods, Inc. * 37 Brookside Rd * Waterbury, Ct 06708

Circular Channel Analysis & Design
Solved with Manning's Equation

Open Channel - Uniform flow

Worksheet Name: WEST RIDGE

Comment: CULVERT DC-12 (10/6)

Solve For Full Flow Diameter

Given Input Data:

Slope.....	0.1000 ft/ft
Manning's n.....	0.020
Discharge.....	4.11 cfs

Computed Results:

Full Flow Diameter.....	0.81 ft
Full Flow Depth.....	0.81 ft
Velocity.....	8.07 fps
Flow Area.....	0.51 sf
Critical Depth....	0.79 ft
Critical Slope....	0.0889 ft/ft
Percent Full.....	100.00 %
Full Capacity.....	4.11 cfs
QMAX @.94D.....	4.42 cfs
Froude Number.....	FULL

Open Channel Flow Module, Version 3.43 (c) 1991
Haestad Methods, Inc. * 37 Brookside Rd * Waterbury, Ct 06708

Circular Channel Analysis & Design
Solved with Manning's Equation

Open Channel - Uniform flow

Worksheet Name: WEST RIDGE

Comment: CULVERT DC-12 (10/24)

Solve For Full Flow Diameter

Given Input Data:

Slope.....	0.1000 ft/ft
Manning's n.....	0.020
Discharge.....	13.51 cfs

Computed Results:

Full Flow Diameter.....	1.26 ft
Full Flow Depth.....	1.26 ft
Velocity.....	10.87 fps
Flow Area.....	1.24 sf
Critical Depth....	1.24 ft
Critical Slope....	0.0900 ft/ft
Percent Full.....	100.00 %
Full Capacity.....	13.51 cfs
QMAX @.94D.....	14.53 cfs
Froude Number.....	FULL

Open Channel Flow Module, Version 3.43 (c) 1991
Haestad Methods, Inc. * 37 Brookside Rd * Waterbury, Ct 06708

Circular Channel Analysis & Design
Solved with Manning's Equation

Open Channel - Uniform flow

Worksheet Name: WEST RIDGE

Comment: CULVERT DC-13 (10/6)

Solve For Full Flow Diameter

Given Input Data:

Slope.....	0.0500 ft/ft
Manning's n.....	0.020
Discharge.....	7.86 cfs

Computed Results:

Full Flow Diameter.....	1.17 ft
Full Flow Depth.....	1.17 ft
Velocity.....	7.32 fps
Flow Area.....	1.07 sf
Critical Depth....	1.09 ft
Critical Slope....	0.0432 ft/ft
Percent Full.....	100.00 %
Full Capacity.....	7.86 cfs
QMAX @.94D.....	8.46 cfs
Froude Number.....	FULL

Circular Channel Analysis & Design
Solved with Manning's Equation

Open Channel - Uniform flow

Worksheet Name: WEST RIDGE

Comment: CULVERT DC-13 (10/24)

Solve For Full Flow Diameter

Given Input Data:

Slope.....	0.0500 ft/ft
Manning's n.....	0.020
Discharge.....	24.66 cfs

Computed Results:

Full Flow Diameter.....	1.80 ft
Full Flow Depth.....	1.80 ft
Velocity.....	9.74 fps
Flow Area.....	2.53 sf
Critical Depth....	1.70 ft
Critical Slope....	0.0433 ft/ft
Percent Full.....	100.00 %
Full Capacity.....	24.66 cfs
QMAX @.94D.....	26.53 cfs
Froude Number.....	FULL

Open Channel Flow Module, Version 3.43 (c) 1991
Haestad Methods, Inc. * 37 Brookside Rd * Waterbury, Ct 06708

Circular Channel Analysis & Design
Solved with Manning's Equation

Open Channel - Uniform flow

Circular Channel Analysis & Design
Solved with Manning's Equation

Open Channel - Uniform flow

Worksheet Name: WEST RIDGE

Comment: CULVERT DC-2

Solve For Full Flow Capacity

Given Input Data:

Diameter.....	2.00 ft
Slope.....	0.0200 ft/ft
Manning's n.....	0.020
Discharge.....	20.80 cfs

Computed Results:

Full Flow Capacity.....	20.80 cfs
Full Flow Depth.....	2.00 ft
Velocity.....	6.62 fps
Flow Area.....	3.14 sf
Critical Depth....	1.63 ft
Critical Slope....	0.0201 ft/ft
Percent Full.....	100.00 %
Full Capacity.....	20.80 cfs
QMAX @.94D.....	22.37 cfs
Froude Number.....	FULL

Open Channel Flow Module, Version 3.43 (c) 1991
Haestad Methods, Inc. * 37 Brookside Rd * Waterbury, Ct 06708

Circular Channel Analysis & Design
Solved with Manning's Equation

Open Channel - Uniform flow

Worksheet Name: WEST RIDGE

Comment: CULVERT DC-4A

Solve For Full Flow Capacity

Given Input Data:

Diameter.....	1.50 ft
Slope.....	0.0600 ft/ft
Manning's n.....	0.020
Discharge.....	16.72 cfs

Computed Results:

Full Flow Capacity.....	16.72 cfs
Full Flow Depth.....	1.50 ft
Velocity.....	9.46 fps
Flow Area.....	1.77 sf
Critical Depth....	1.44 ft
Critical Slope....	0.0522 ft/ft
Percent Full.....	100.00 %
Full Capacity.....	16.72 cfs
QMAX @.94D.....	17.99 cfs
Froude Number.....	FULL

Open Channel Flow Module, Version 3.43 (c) 1991
Haestad Methods, Inc. * 37 Brookside Rd * Waterbury, Ct 06708

Circular Channel Analysis & Design
Solved with Manning's Equation

Open Channel - Uniform flow

Worksheet Name: WEST RIDGE

Comment: CULVERT DC-5

Solve For Full Flow Capacity

Given Input Data:

Diameter.....	1.50 ft
Slope.....	0.0200 ft/ft
Manning's n.....	0.020
Discharge.....	9.66 cfs

Computed Results:

Full Flow Capacity.....	9.66 cfs
Full Flow Depth.....	1.50 ft
Velocity.....	5.46 fps
Flow Area.....	1.77 sf
Critical Depth....	1.20 ft
Critical Slope....	0.0209 ft/ft
Percent Full.....	100.00 %
Full Capacity.....	9.66 cfs
QMAX @.94D.....	10.39 cfs
Froude Number.....	FULL

Open Channel Flow Module, Version 3.43 (c) 1991
Haestad Methods, Inc. * 37 Brookside Rd * Waterbury, Ct 06708

Circular Channel Analysis & Design
Solved with Manning's Equation

Open Channel - Uniform flow

Worksheet Name: WEST RIDGE

Comment: CULVERT DC-6

Solve For Full Flow Capacity

Given Input Data:

Diameter.....	1.50 ft
Slope.....	0.0200 ft/ft
Manning's n.....	0.020
Discharge.....	9.66 cfs

Computed Results:

Full Flow Capacity.....	9.66 cfs
Full Flow Depth.....	1.50 ft
Velocity.....	5.46 fps
Flow Area.....	1.77 sf
Critical Depth....	1.20 ft
Critical Slope....	0.0209 ft/ft
Percent Full.....	100.00 %
Full Capacity.....	9.66 cfs
QMAX @.94D.....	10.39 cfs
Froude Number.....	FULL

Open Channel Flow Module, Version 3.43 (c) 1991
Haestad Methods, Inc. * 37 Brookside Rd * Waterbury, Ct 06708

Circular Channel Analysis & Design
Solved with Manning's Equation

Open Channel - Uniform flow

Worksheet Name: WEST RIDGE

Comment: CULVERT DC-7

Solve For Full Flow Capacity

Given Input Data:

Diameter.....	2.00 ft
Slope.....	0.0200 ft/ft
Manning's n.....	0.020
Discharge.....	20.80 cfs

Computed Results:

Full Flow Capacity.....	20.80 cfs
Full Flow Depth.....	2.00 ft
Velocity.....	6.62 fps
Flow Area.....	3.14 sf
Critical Depth....	1.63 ft
Critical Slope....	0.0201 ft/ft
Percent Full.....	100.00 %
Full Capacity.....	20.80 cfs
QMAX @.94D.....	22.37 cfs
Froude Number.....	FULL

Open Channel Flow Module, Version 3.43 (c) 1991
Haestad Methods, Inc. * 37 Brookside Rd * Waterbury, Ct 06708

Circular Channel Analysis & Design
Solved with Manning's Equation

Open Channel - Uniform flow

Worksheet Name: WEST RIDGE

Comment: CULVERT DC-8

Solve For Full Flow Capacity

Given Input Data:

Diameter.....	1.50 ft
Slope.....	0.1000 ft/ft
Manning's n.....	0.020
Discharge.....	21.59 cfs

Computed Results:

Full Flow Capacity.....	21.59 cfs
Full Flow Depth.....	1.50 ft
Velocity.....	12.22 fps
Flow Area.....	1.77 sf
Critical Depth....	1.48 ft
Critical Slope....	0.0904 ft/ft
Percent Full.....	100.00 %
Full Capacity.....	21.59 cfs
QMAX @.94D.....	23.23 cfs
Froude Number.....	FULL

Open Channel Flow Module, Version 3.43 (c) 1991
Haestad Methods, Inc. * 37 Brookside Rd * Waterbury, Ct 06708

Circular Channel Analysis & Design
Solved with Manning's Equation

Open Channel - Uniform flow

Worksheet Name: WEST RIDGE

Comment: CULVERT DC-9

Solve For Full Flow Capacity

Given Input Data:

Diameter.....	1.50 ft
Slope.....	0.2500 ft/ft
Manning's n.....	0.020
Discharge.....	34.14 cfs

Computed Results:

Full Flow Capacity.....	34.14 cfs
Full Flow Depth.....	1.50 ft
Velocity.....	19.32 fps
Flow Area.....	1.77 sf
Critical Depth....	1.50 ft
Critical Slope....	0.2395 ft/ft
Percent Full.....	100.00 %
Full Capacity.....	34.14 cfs
QMAX @.94D.....	36.72 cfs
Froude Number.....	FULL

Open Channel Flow Module, Version 3.43 (c) 1991
Haestad Methods, Inc. * 37 Brookside Rd * Waterbury, Ct 06708

Circular Channel Analysis & Design
Solved with Manning's Equation

Open Channel - Uniform flow

Worksheet Name: WEST RIDGE

Comment: CULVERT DC-10

Solve For Full Flow Capacity

Given Input Data:

Diameter.....	1.50 ft
Slope.....	0.2500 ft/ft
Manning's n.....	0.020
Discharge.....	34.14 cfs

Computed Results:

Full Flow Capacity.....	34.14 cfs
Full Flow Depth.....	1.50 ft
Velocity.....	19.32 fps
Flow Area.....	1.77 sf
Critical Depth....	1.50 ft
Critical Slope....	0.2395 ft/ft
Percent Full.....	100.00 %
Full Capacity.....	34.14 cfs
QMAX @.94D.....	36.72 cfs
Froude Number.....	FULL

Open Channel Flow Module, Version 3.43 (c) 1991
Haestad Methods, Inc. * 37 Brookside Rd * Waterbury, Ct 06708

Circular Channel Analysis & Design
Solved with Manning's Equation

Open Channel - Uniform flow

Worksheet Name: WEST RIDGE

Comment: CULVERT DC-10A

Solve For Full Flow Capacity

Given Input Data:

Diameter.....	1.50 ft
Slope.....	0.2000 ft/ft
Manning's n.....	0.020
Discharge.....	30.53 cfs

Computed Results:

Full Flow Capacity.....	30.53 cfs
Full Flow Depth.....	1.50 ft
Velocity.....	17.28 fps
Flow Area.....	1.77 sf
Critical Depth....	1.49 ft
Critical Slope....	0.1896 ft/ft
Percent Full.....	100.00 %
Full Capacity.....	30.53 cfs
QMAX @.94D.....	32.85 cfs
Froude Number.....	FULL

Open Channel Flow Module, Version 3.43 (c) 1991
Haestad Methods, Inc. * 37 Brookside Rd * Waterbury, Ct 06708

Circular Channel Analysis & Design
Solved with Manning's Equation

Open Channel - Uniform flow

Worksheet Name: WEST RIDGE

Comment: CULVERT DC-11

Solve For Full Flow Capacity

Given Input Data:

Diameter.....	2.00 ft
Slope.....	0.0500 ft/ft
Manning's n.....	0.020
Discharge.....	32.88 cfs

Computed Results:

Full Flow Capacity.....	32.88 cfs
Full Flow Depth.....	2.00 ft
Velocity.....	10.47 fps
Flow Area.....	3.14 sf
Critical Depth....	1.90 ft
Critical Slope....	0.0433 ft/ft
Percent Full.....	100.00 %
Full Capacity.....	32.88 cfs
QMAX @.94D.....	35.37 cfs
Froude Number.....	FULL

Open Channel Flow Module, Version 3.43 (c) 1991
Haestad Methods, Inc. * 37 Brookside Rd * Waterbury, Ct 06708

Circular Channel Analysis & Design
Solved with Manning's Equation

Open Channel - Uniform flow

Worksheet Name: WEST RIDGE

Comment: CULVERT DC-12

Solve For Full Flow Capacity

Given Input Data:

Diameter.....	1.50 ft
Slope.....	0.1000 ft/ft
Manning's n.....	0.020
Discharge.....	21.59 cfs

Computed Results:

Full Flow Capacity.....	21.59 cfs
Full Flow Depth.....	1.50 ft
Velocity.....	12.22 fps
Flow Area.....	1.77 sf
Critical Depth....	1.48 ft
Critical Slope....	0.0904 ft/ft
Percent Full.....	100.00 %
Full Capacity.....	21.59 cfs
QMAX @.94D.....	23.23 cfs
Froude Number.....	FULL

Open Channel Flow Module, Version 3.43 (c) 1991
Haestad Methods, Inc. * 37 Brook

Circular Channel Analysis & Design
Solved with Manning's Equation

Open Channel - Uniform flow

Worksheet Name: WEST RIDGE

Comment: CULVERT DC-13

Solve For Full Flow Capacity

Given Input Data:

Diameter.....	2.00 ft
Slope.....	0.0500 ft/ft
Manning's n.....	0.020
Discharge.....	32.88 cfs

Computed Results:

Full Flow Capacity.....	32.88 cfs
Full Flow Depth.....	2.00 ft
Velocity.....	10.47 fps
Flow Area.....	3.14 sf
Critical Depth....	1.90 ft
Critical Slope....	0.0433 ft/ft
Percent Full.....	100.00 %
Full Capacity.....	32.88 cfs
QMAX @.94D.....	35.37 cfs
Froude Number.....	FULL

Open Channel Flow Module, Version 3.43 (c) 1991
Haestad Methods, Inc. * 37 Brookside Rd * Waterbury, Ct 06708

RESTORED CHANNELS

Title of run: RC-DD (10/6)

```
   Solving for................= Depth Normal
apedeziod
   Flow depth (ft)............=    0.02
   First Side slope...........=     2.0
   Second Side slope..........=     2.0
   Bottom width (ft)..........=    4.00
   Slope of diversion.........=  0.2450
   Manning"s n................=   0.035
   CFS........................=    0.15
   Cross section area (sqft)..=    0.09
   Hydrualic radius...........=    0.02
   fps........................=    1.66
   Froude number..............=    1.97
```

Title of run: RC-DD (100/6)

```
   Solving for................= Depth Normal
   pedeziod
   Flow depth (ft)............=    0.07
   First Side slope...........=     2.0
   Second Side slope..........=     2.0
   Bottom width (ft)..........=    4.00
   Slope of diversion.........=  0.2450
   Manning"s n................=   0.035
   CFS........................=    0.92
   Cross section area (sqft)..=    0.27
   Hydrualic radius...........=    0.06
   fps........................=    3.36
   Froude number..............=    2.35
```

Title of run: RC-FF (10/6)

```
   Solving for................= Depth Normal
Trapedeziod
   Flow depth (ft)............=    0.02
   First Side slope...........=     2.0
   Second Side slope..........=     2.0
   Bottom width (ft)..........=    4.00
   Slope of diversion.........=  0.2440
   Manning"s n................=   0.035
   CFS........................=    0.16
   Cross section area (sqft)..=    0.09
   Hydrualic radius...........=    0.02
   fps........................=    1.70
   Froude number..............=    1.98
```

Title of run: RC-FF (100/6)

```
   Solving for................= Depth Normal
Trapedeziod
   Flow depth (ft)............=    0.07
   First Side slope...........=     2.0
   Second Side slope..........=     2.0
   Bottom width (ft)..........=    4.00
   Slope of diversion.........=  0.2440
   Manning"s n................=   0.035
   CFS........................=    0.95
   Cross section area (sqft)..=    0.28
   Hydrualic radius...........=    0.06
   fps........................=    3.40
   Froude number..............=    2.35
```

Title of run: RC-GG (10/6)

```
Solving for................= Depth Normal
pedeziod
Flow depth (ft)............=    0.33
First Side slope...........=     2.0
Second Side slope..........=     2.0
Bottom width (ft)..........=   12.00
Slope of diversion.........=  0.0640
Manning"s n................=   0.035
CFS........................=   21.08
Cross section area (sqft)..=    4.24
Hydrualic radius...........=    0.31
fps........................=    4.98
Froude number..............=    1.56
```

Title of run: RC-GG (100/6)

```
Solving for................= Depth Normal
pedeziod
Flow depth (ft)............=    0.68
First Side slope...........=     2.0
Second Side slope..........=     2.0
Bottom width (ft)..........=   12.00
Slope of diversion.........=  0.0640
Manning"s n................=   0.035
CFS........................=   69.98
Cross section area (sqft)..=    9.09
Hydrualic radius...........=    0.60
fps........................=    7.70
Froude number..............=    1.75
```

Title of run: RC-JJ (10/6)

```
   Solving for................= Depth Normal
trapedeziod
   Flow depth (ft)............=    0.05
   First Side slope...........=     2.0
   Second Side slope..........=     2.0
   Bottom width (ft)..........=    4.00
   Slope of diversion.........=  0.2460
   Manning"s n................=   0.035
   CFS........................=    0.50
   Cross section area (sqft)..=    0.19
   Hydrualic radius...........=    0.04
   fps........................=    2.66
   Froude number..............=    2.22
```

Title of run: RC-JJ (100/6)

Solving for.....=	Depth Normal
pedeziod	
Flow depth (ft).....=	0.11
First Side slope.....=	2.0
Second Side slope.....=	2.0
Bottom width (ft).....=	4.00
Slope of diversion.....=	0.2460
Manning"s n.....=	0.035
CFS.....=	2.16
Cross section area (sqft)..=	0.46
Hydrualic radius.....=	0.10
fps.....=	4.65
Froude number.....=	2.55

Title of run: RC-KK (10/6)

```
   Solving for................= Depth Normal
Trapedeziod
   Flow depth (ft)............=    0.20
   First Side slope...........=     2.0
   Second Side slope..........=     2.0
   Bottom width (ft)..........=   12.00
   Slope of diversion.........=  0.1000
   Manning"s n................=   0.035
   CFS........................=   11.13
   Cross section area (sqft)..=    2.48
   Hydrualic radius...........=    0.19
   fps........................=    4.49
   Froude number..............=    1.80
```

Title of run: RC-KK (100/6)

```
Solving for................= Depth Normal
pedeziod
Flow depth (ft)............=    0.40
First Side slope...........=     2.0
Second Side slope..........=     2.0
Bottom width (ft)..........=   12.00
Slope of diversion.........=  0.1000
Manning"s n................=   0.035
CFS........................=   35.65
Cross section area (sqft)..=    5.12
Hydrualic radius...........=    0.37
fps........................=    6.96
Froude number..............=    2.01
```

Title of run: RC-MM (10/6)

```
   Solving for................= Depth Normal
   pedeziod
   Flow depth (ft)............=    0.01
   First Side slope...........=     2.0
   Second Side slope..........=     2.0
   Bottom width (ft)..........=    4.00
   Slope of diversion.........=  0.4070
   Manning"s n................=   0.035
   CFS........................=    0.07
   Cross section area (sqft)..=    0.05
   Hydrualic radius...........=    0.01
   fps........................=    1.43
   Froude number..............=    2.29
```

Title of run: RC-MM (100/6)

```
   Solving for................= Depth Normal
   pedeziod
   Flow depth (ft)............=    0.04
   First Side slope...........=     2.0
   Second Side slope..........=     2.0
   Bottom width (ft)..........=    4.00
   Slope of diversion.........=  0.4070
   Manning"s n................=   0.035
   CFS........................=    0.52
   Cross section area (sqft)..=    0.17
   Hydrualic radius...........=    0.04
   fps........................=    3.15
   Froude number..............=    2.79
```

Title of run: RC-PP (10/6)

```
   Solving for................= Depth Normal
Trapedeziod
   Flow depth (ft)............=    0.02
   First Side slope...........=     2.0
   Second Side slope..........=     2.0
   Bottom width (ft)..........=    4.00
   Slope of diversion.........=  0.4050
   Manning"s n................=   0.035
   CFS........................=    0.11
   Cross section area (sqft)..=    0.06
   Hydrualic radius...........=    0.02
   fps........................=    1.71
   Froude number..............=    2.39
```

Title of run: RC-PP (100/6)

```
   Solving for................= Depth Normal
Trapedeziod
   Flow depth (ft)............=    0.05
   First Side slope...........=     2.0
   Second Side slope..........=     2.0
   Bottom width (ft)..........=    4.00
   Slope of diversion.........=  0.4050
   Manning"s n................=   0.035
   CFS........................=    0.69
   Cross section area (sqft)..=    0.20
   Hydrualic radius...........=    0.05
   fps........................=    3.51
   Froude number..............=    2.86
```

Title of run: RC-QQ (10/6)

```
   Solving for................= Depth Normal
   Trapedeziod
   Flow depth (ft)............=    0.46
   First Side slope...........=     2.0
   Second Side slope..........=     2.0
   Bottom width (ft)..........=   12.00
   Slope of diversion.........=  0.0630
   Manning"s n................=   0.035
   CFS........................=   35.88
   Cross section area (sqft)..=    5.95
   Hydrualic radius...........=    0.42
   fps........................=    6.03
   Froude number..............=    1.63
```

Title of run: RC-QQ (100/6)

```
   Solving for................= Depth Normal
pedeziod
   Flow depth (ft)............=    0.92
   First Side slope...........=     2.0
   Second Side slope..........=     2.0
   Bottom width (ft)..........=   12.00
   Slope of diversion.........=  0.0630
   Manning"s n................=   0.035
   CFS........................=  116.35
   Cross section area (sqft)..=   12.74
   Hydrualic radius...........=    0.79
   fps........................=    9.13
   Froude number..............=    1.81
```