Sunnyside Cogeneration Associates

P.O. Box 10, East Carbon, Utah 84520 • (435) 888-4476 • Fax (435) 888-2538

September 14, 2016

Daron Haddock
Division of Oil Gas and Mining
1594 West North Temple, Suite 1210
Salt Lake City, UT 84116

RE: Sunnyside Cogeneration Associates
Star Point Refuse and Slurry C/007/042
Task 5204 – Midterm Review

Dear Mr. Haddock,

Thank you for your team's midterm review and inspection. This amendment addresses your team's concerns following the inspection and addresses the required bonding comments. We have updated the prior amendment submittal in response to additional comments received in August 2016, on this amendment.

Various maintenance tasks have been completed to address the erosion items identified during the field inspections. Sediment ponds have been cleaned.

Enclosed is the submittal of permit documents for the following:

- Star Point Bond Calculations utilizing updated rates and escalation factors.
- Updates to ditch/culvert reclamation quantities
- Drawings and permit text for the riprap inlet ditches into Pond 5

We look forward to receiving your approval of this amendment. If you have any questions or if further clarification is needed, please contact Rusty Netz or myself at 435-888-4476.

Thank You,

Gerald Hascall / R.M.

Gerald Hascall
Agent for
Sunnyside Cogeneration Associates

cc: Rusty Netz
Plant File

In the Pinyon-Juniper Habitat/Sagebrush Habitat three transects, with 1000 meters per transect, overlapping both habitat types were used. In the Salt Desert Shrub Habitat 1 transect was used. In the Mixed Mountain Brush and Grass Habitat, 1 transect was used. One trap every 10 meters along each transect was used. One pellet group every 10 meters was also used with a two meter radius around each station. The transects were located within and in adjacent areas to the permit area. The following details the transect locations:

- Transect 1, Section 2, 11 T15S, running to the railroad tracks from SW to NE.
- Transect 2,Section 10,11 T15S R8E, North of the existing road and running parallel to road in an E NE direction.
- Transect 3, W½ Section 10 T15S R8E, Northeast of Wattis and running parallel to railroad tracks from N to S.
- Transect 4, Section 15,16 T15S R8E, South of Wattis in the proposed refuse pile extension area.
- Transect 5, Section 15 T15S R8E, South of Wattis on hillside, running from railroad tracks toward Wattis.

Data on wildlife use of the area was obtained from field observations from the references listed at the end of this section and BLM/UDWR Wildlife Land Use Maps of the SE Utah region.

322.200. Site Specific Resource Information.

Resource information for the Permit Area is included below for threatened or endangered species and high value wildlife habitat.

322.210. Threatened or Endangered Species.

According to the Utah Division of Wildlife Resources records, personnel from their office have performed threatened and endangered species surveys on the Star Point Mine site since 1981. UDWR personnel have included Ben Morris, Miles Moretti, Jim Karpowitz, Larry Dalton, and John Kimball; however, Ben Morris and Chris Colt have performed the majority of the recent surveys. The data from the UDWR do not always include the survey date or exact personnel performing the survey. The dates we do have are: 1998 and 1999 surveys done by Chris Colt on May 18, 1998 and May 14, 1999; Ben Morris in 1997; surveyed by Ben Morris on June 11, 1996; Ben Morris on May 9, 1995; Bill Bates on June 6, 1994; Bill Bates on May 19, 1992; Bill Bates June 11, 1991; Bill Bates on June 2, 1990, Larry Dalton on June 23, 1981, and Bill Bates or Miles Moretti letters from 1990, 1991, 1992, 1993, and 1994. An additional consultation with US Fish and Wildlife Service (April 6, 2016) provided updated information regarding threatened and endangered species. Correspondence was not exchanged every year, but confirmation should be available from the UDWR records. Additional wildlife correspondence is included in

Exhibit 322.210a.

The current list (April 6, 2016~~March 29, 2011~~) of Utah's Federally Listed Threatened, Endangered, and Candidate Species lists the following species for Carbon County.

Table 322.210a. Utah's Federally Listed Threatened, Endangered, and Candidate Species for Carbon County

Common Name	Scientific Name	Status
~~Uinta Basin Hookless Cactus~~	~~Sclerocactus glaucus~~	~~Threatened~~
Humpback Chub	Gila cypha	Endangered
Bonytail Chub	Gila elegans	Endangered
Colorado Pikeminnow	Ptychocheilus lucius	Endangered
Razorback Sucker	Xyrauchen texanus	Endangered
~~Greater Sage-grouse~~	~~Centrocercus urophasianus~~	~~Candidate~~
~~Black-footed Ferret~~	~~Mustela nigripes~~	~~Extirpated~~
~~Gray Wolf~~	~~Canis Lupus~~	~~Endangered~~
Mexican Spotted owl	*Strix occidentalis lucida)*	Threatened
Yellow-Billed Cuckoo	*Coccyzus americanus*	Threatened

Table 322.210b evaluates the potential for special status species to occur in the SCA - Star Point Permit Area. This list is based on the Utah State sensitive and listed species sorted for Carbon County. It is compiled using known species occurrences and species observations from the Utah Natural Heritage Program's BIOTICS; and includes both current and historic records (~~March 29, 2011~~April 6, 2016). This list has been adopted by BLM. The list of plants was not updated so we have left the prior list of plants without any changes. There are no endangered or threatened species in the SCA - Star Point Permit Area, nor are there any in proximity close enough to be considered to have the potential of being impacted by this permitting action.

Table 322.210b. Evaluation of Potential Status Species to Occur in the Permit Area

Common Name	Habitat and Distribution	Status	Occurrence Evaluation
Plants			
Canyon sweetvetch *Hedysarum occidentale var canone*	Shrub communities in canyons in Emery and Carbon County.	BLM Sensitive Species	Documented in adjacent lands. Low probability of occurrence on disturbed lands of the Permit Area.
Uinta Basin Hookless Cactus *Sclerocactus glaucus*	Uinta Basin hookless cactus is found on river benches, valley slopes, and rolling hills of the Duchesne River, Green River, and Mancos formations. It is found in xeric, fine textured soils overlain	Threatened	Low probability. No reported occurrences.

Common Name	Habitat and Distribution	Status	Occurrence Evaluation
	with cobbles and pebbles, growing in salt desert shrub and pinyon-juniper communities, at elevations ranging from 1360 to 2000 meters.		
Graham Beardtongue *Penstemon grahamii*	Elevation Range: 1,720 to 1,970 meters	Sensitive Species	Low probability. No reported occurrences.
Fish			
Humpback Chub *Gila cypha*	The humpback chub lives primarily in canyons with swift currents and white water. Historically, it inhabited canyons of the Colorado River and four of its tributaries: the Green, Yampa, White and Little Colorado rivers.	Federally listed, endangered.	Low probability. No aquatic habitat in Permit Area. No reported occurrences.
Bonytail *Gila elegans*	Bonytail once were common in portions of the upper and lower Colorado River basins.	Federally listed, endangered.	Low probability. No aquatic habitat in Permit Area. No reported occurrences.
Colorado Pikeminnow *Ptychocheilus lucius*	Colorado pikeminnow were once abundant in the main stem of the Colorado River and most of its major tributaries in Colorado, Wyoming, Utah, New Mexico, Arizona, Nevada, California and Mexico.	Federally listed as endangered.	Low probability. No aquatic habitat in Permit Area. No reported occurrences.
Razorback Sucker *Xyrauchen texanus*	The razorback sucker was once widespread throughout most of the Colorado River Basin from Wyoming to Mexico.	Federally listed as endangered.	Low probability. No aquatic habitat in Permit Area. No reported occurrences.
Bluehead Sucker *Catostomus discobolus*	occurs in the upper Colorado River system. Fast flowing water in high gradient reaches of mountain rivers has been identified as important habitat	Conservation Agreement Species	Low probability. No aquatic habitat in Permit Area. No reported occurrences.
Colorado River cutthroat trout, *Oncorhynchus clarkii pleuriticus*	native to the upper Colorado River drainage. now naturally occur only in isolated high-elevation headwater streams	Conservation Agreement Species	Low probability. No aquatic habitat in Permit Area. No reported occurrences.

Common Name	Habitat and Distribution	Status	Occurrence Evaluation
flannelmouth sucker, *Catostomus latipinnis*	In Utah, the species occurs in the main-stem Colorado River, as well as in many of the Colorado River's large tributaries. Flannelmouth suckers are usually absent from impoundments.	Conservation Agreement Species	Low probability. No aquatic habitat in Permit Area. No reported occurrences.
roundtail chub, *Gila robusta*	species prefers large rivers, and is most often found in murky pools near strong currents in the main-stem Colorado River, and in the Colorado River's large tributaries	Conservation Agreement Species	Low probability. No aquatic habitat in Permit Area. No reported occurrences.
Birds			
Mexican Spotted Owl, *Strix occidentalis lucida*	Spotted owls are residents of old-growth or mature forests that possess complex structural components. Canyons with riparian or conifer communities are also important components. Owls are usually found in areas with some type of water source.	Threatened	Low probability. No reported occurrences
Yellow-billed Cuckoo *Coccyzus americanus*	Yellow-billed Cuckoos use wooded habitat with dense cover and water nearby. In the West, nests are often placed in willows along streams and rivers, with nearby cottonwoods serving as foraging sites.	Threatened	Low probability. No reported occurrences.
Bald Eagle *Haliaeetus leucocephalus*	The raptors' habitat includes estuaries, large lakes, reservoirs, major rivers, and some seacoast areas. The permit area is potential winter habitat.	Species of Concern	Low probability. No reported occurrences.
Ferruginous hawk *Buteo regalis*	The raptor's habitat includes semiarid grasslands with scattered trees, rocky mounds or outcrops, and shallow canyons that overlook open valleys. They may occur along streams or in agricultural areas in migration.	Species of Concern	Potential summer resident. No active ferruginous hawk nests were located in the Permit Area during raptor surveys.
Northern Goshawk *Accipiter gentilis*	Prefers aspen and conifers vegetation.	Conservation agreement Species	Documented in adjacent lands. Preferred habitat not available in Permit Area.
Burrowing owl, *Athene cunicularia*	Its habitats are open grassland and prairies, but it also utilizes other open situations, such as golf courses, cemeteries, and airports	Species of Concern	Not a likely resident Preferred habitat not in the Permit Area

Common Name	Habitat and Distribution	Status	Occurrence Evaluation
Greater Sage Grouse *Centrocerus urophasianus*	Prefers sagebrush habitat.	Candidate Species	Potential resident in sagebrush areas nearby.
Long-billed curlew, *Numenius americanus*	fairly common summer resident and migrant in Utah, especially through the central and more northern valleys. It is less common in the Colorado River drainage. This species lives and breeds in higher and drier meadowlands than many other shorebird species	Species of Concern	Not a likely resident
Mammals			
Black-footed Ferret (Unconfirmed in Carbon County)	Short and mid-grass prairies of the Great Plains	Extirpated	Low probability. No reported occurrences.
Gray Wolf *Canis lupis*	Quality of habitat depends on prey availability.	Federally listed as endangered	Low probablility. No reported occurrences
Kit fox, *Vulpes macrotis*	not overly abundant in Utah, it does occur in the western, east-central, and southeastern areas of the state	Species of Concern	Not a likely resident of the area
Townsend's big-eared bat, *Corynorhinus townsendii*	species occurs state-wide in Utah at elevations below 9,000 feet. Often found near forested areas. Caves, mines, and buildings are used for day roosting and winter hibernation	Species of Concern	Potential resident in the area, but not documented
western red bat, *Lasiurus blossevillii*	extremely rare in Utah, normally found near water, often in wooded areas	Species of Concern	Not a likely resident of the area
white-tailed prairie-dog, *Cynomys leucurus*	form colonies and spend much of their time in underground burrows, often hibernating during the winter. The white-tailed prairie-dog's diet is composed of grasses and bulbs.	Species of Concern	Potential resident in the area, but not documented
Amphibians			
western toad, *Bufo boreas*	can be found in a variety of habitats, including slow moving streams, wetlands, desert springs, ponds, lakes, meadows, and woodlands	Species of Concern	Not a likely resident of the area

322.220. HIGH VALUE WILDLIFE HABITATS.

The locations of all streams, wetlands, riparian, migration, reproduction, or wintering area of significance to wildlife are depicted on Map 322.220a. This map shows the location of all such areas identified as being important habitat for wildlife. Wildlife species listed by the UDWR as being or special concern or of high importance to the region and their associated critical habitat components are listed in Exhibit 322.200a, Table 322.220a, Relative Biological Value of Special Concern Animals by Habitat Type within the SCA - Star Point Permit Area. This research was designed to qualitatively evaluate the terrestrial vertebrate components in habitats that may be affected by the SCA Permit.

Wildlife Habitat in Refuse Area

The SCA - Star Point Permit Area is covered by several important habitats that are used by species considered of "high interest" to various management agencies because of economic or recreation value. For purposes of wildlife planning, vegetation habitats from a faunal standpoint include pinyon-juniper, salt desert shrub, and sagebrush. A detailed discussion of the vegetation resources within the SCA - Star Point Permit Area, as well as, their functional value for wildlife is presented in the response to Section 321. Detailed vegetation mapping of the entire permit area is presented on Map 321.100a and 321.100b. The important wildlife habitat types found in the SCA - Star Point Permit Area as obtained from the files of the UDWR are shown on Map 322.220a, Wildlife Habitat Types.

The coal waste pile was started prior to the environmental regulations. In 1982, a plan to expand the waste pile to the south and west was approved as a part of the Mining and Reclamation Permit. Disturbance resulting from mining, has most liked impacted and will further impact elk, mule deer, cougar, bobcat, mountain and desert cottontail, snowshoe hare, fur bearers, small mammals, amphibians, reptiles, and birds (Exhibit 322.200a, Table 322.200e, Impacts of Mining on High Interest Mammals). The SCA - Star Point Permit Area is not vital to these species discussed below, but with reclamation, it will provide habitat for the future.

Mammals

In all habitats, water is a critical resource and is possibly the limiting factor. The high interest species will be discussed individually in this section. Only those mammals of major concern to management agencies are individually discussed below.

Elk. The elk herd in the Wattis Planning Unit is a significant resource to the citizens of Utah. The elk are thought by the UDWR to be stable and productive. The area affected by the coal refuse pile is not critical to the elk herd. Elk usage of the area is marginal, and operation of the Star Point Mines has been ongoing for many years. The animals have already accommodated human disturbance associated with mining and hauling coal. The mountain brush-grass and mixed conifer-aspen areas

surrounding the Permit Area are used by elk on a seasonal basis, roughly from November 1 to May 15. Excessive snow forces the elk into lower, more open habitats. The length of time and extent of the area used by the elk depends on the depth and length of time snow remains in the high country. Disturbances to elk during the winter season is most detrimental because of the limited energy reserves of the animals and should be kept to a minimum (Pritchett and Smith, 1980). Elk often have low energy reserves due to depletion by winter conditions; unnecessary disturbances by man can cause them to use critical and limited energy reserves. Such disturbance can result in excessive mortality, as in the winter of 1978-79 or, in less severe cases, to abortion or absorption of fetuses. Both situations reduce the productivity of the herd.

Mule Deer. Mule deer on the SCA - Star Point Permit Area are considered part of herd unit 33 by UDWR. The animals utilize the entire Permit Area, but they seasonally concentrate in and more heavily utilize specific habitat types. The high elevation mountain brush-grass and conifer-aspen habitats areas are used for summer range and fawning. The low altitude mountain brush, mixed desert shrub, and pinyon-juniper habitats are used as winter range during normal winters. The present disturbed area makes up only a small percentage of the low altitude mountain-brush, mixed desert shrub and pinyon-juniper habitats used as winter range during normal winters. Excessive snows force deer to abandon the area and move east to areas of less snow and more protection (Pritchett and Smith, 1980). The browse in the wintering habitats adjacent to the Permit Area is in relatively good condition and can facilitate overwintering of deer in a normal year; however, the same precautionary considerations must be given mule deer as were suggested for elk.

Cougar. The Permit Area and adjacent areas may provide year-long habitat for cougar. Cougars could range throughout the area, but their movements are dictated by migration patterns, human disturbance, and availability of their primary food source, mule deer. Sightings in the vicinity of the Permit Area seem to indicate that there is a population of cougar in the general area and that the cougars are accustomed to the activity in the SCA - Star Point Permit Area. Since cougars are not abundant and are known to be secretive, avoidance will be practiced when the females are accompanied by young learning to hunt and survive.

This period in the life cycle of the cougar, however, is difficult to determine since they are known to reproduce year round. If cougar populations in the Permit Area were high, this would be of major concern. Since the cougar population numbers are low and ranges are extensive compared to the area Permit Area, the cougars will usually avoid human activity areas. Therefore, there will be little impact on the overall cougar population.

Bobcat. The Permit Area and adjacent areas provide habitats for bobcats. Although little is known about the Utah bobcat, one sensitive period would be late February when parturition occurs. May and June would also be a sensitive period because

young bobcats, when first exploring and learning to hunt, are not as secretive as the cougar making them less likely to avoid high human disturbance areas during these months. However, since this is an ongoing mining operation, impact on bobcats should be unchanged.

Mountain and Desert Cottontails. The Coal Refuse Pile Area provides substantial value, year-long habitats for cottontail rabbits. The young are born between April and July, which is considered a sensitive period, but the proposed actions will in all probability not seriously alter the reproductive potential of the populations. Hunting pressure most likely will not increase nor will illegal kill; however, this would not matter since hunted rabbit populations are more healthy and stable than non-hunted populations. It should be noted that disturbed vegetation leading to succession would enhance reproductive potential of cottontail rabbits.

Furbearers. Limited portions of the Permit Area and adjacent areas provide substantial value habitats for a few species categorized by management agencies as furbearers: ermine, long-tailed weasel, badger, and the striped skunk. If the breeding and rearing activities of these non-migratory species occurs within the proposed impact area, their dens and burrow systems are important to maintenance of their populations. However, it is highly unlikely that there will be any serious long-term impacts created by the proposed actions of this specific project. After disturbance occurs, new burrows will be built or old ones reconstructed. These species are widespread and adaptable to the activities of man.

Small Mammals. Although small mammals do not qualify individually as high interest species, they represent a significant part of the ecosystem. The majority are herbivores and are the primary source of food for higher trophic levels, particularly raptorial birds, canids, and felids. This trophic importance warrants consideration. Since this mining project only involves the removal of the coal refuse pile, there will be little habitat loss due to construction and operation. The potential exists for caving in burrows and/or changing burrow in the Subsoil Area. Although this would temporarily alter the population density and age structure, recovery would be imminent and rapid since the breeding population contiguous and within the localized area of impact would not be lost. Additionally, the population densities are more than adequate to supply the limited number of predators present, particularly raptorial birds that utilize the resource. Results from the small mammal trapping are summarized on Exhibit 322.200a, Table 322.200d, Estimated Population Densities.

No population density studies have been conducted since 1981, but visual observations have been an ongoing practice at CPMC. Populations of ground burrowing squirrels and marmots have grown significantly in areas where interim revegetation has been conducted.

Birds

A review of literature on birds was conducted using a computer data program and available publications on bird distribution. One trip was made to the Refuse Pile Area site in November 1980 and June 1981. Raptor surveys were initially conducted in 1981 and 1982 within the surrounding areas. Raptor surveys have been conducted by Star Point Mine yearly since 1982 in conjunction with the UDWR and the USFWS. CPMC sought permission from the UDWR to discontinue raptor monitoring on April 10, 2000, and received authorization on April 25, 2000, (Exhibit 322.210a) due to the closure of the mine and since previous, existing, and future mining related activities appear to have not posed or will not pose any threat to raptors within the affected areas.

CPMC held meetings to get agency input into the bird investigations. The following were contacted or were met with: James Bates and Charles Greenwood (Wildlife Biologists - UDWR), Don Ward (Wildlife Biologist - U.S. Forest Service), and Clark Johnson (USFWS).

According to information prepared by the UDWR, the mine plan area is represented by the Transition and Canadian Life zones. In this area the UDWR states that there is a potential for 242 bird species in the near by areas. The summary of habitats present in the mine plan area include cliffs and talus, sagebrush, and pinyon-juniper. In these habitats, the typical arid desert species are represented. A more detailed account of these habitats is contained in DOGM's recent summary of animal occurrence in the area (Dalton et. al. 1990). Results from these surveys suggest there is the potential of 172 species occurring in areas adjacent to the SCA - Star Point Permit Area Exhibit 322.200a, Table 322.200b. These numbers can be broken down to 83 species which are known to occur, 32 species likely to occur, and 57 species which potentially occur within the SCA - Star Point Permit Area.

Although some impact may occur to other birds, no serious impacts of any kind are anticipated because of the large amount of area in Carbon County of this same habitat type and the status of the birds involved. Continued monitoring activities of raptors in the area will document any impacts to nesting raptors.

The UDWR has requested that the issue of "critical habitat" be addressed as it relates to certain birds of "high interest". The only "high interest" birds thought to be found in the area are:

Greater Sage-grouse. A very small portion of the permit area resides within the Carbon County Sage-grouse Management Area. Since SCA anticipates no new surface disturbance, it is highly unlikely that mining operations could impact sage-grouse habitat. However, operators should be aware of and be cautious of sage-grouse on roadways to prevent possible collisions.

Western Yellow-Billed Cuckoo. The complex riparian systems required for Western Yellow-Billed Cuckoo do not exist within the permit area.

Nesting habitat is classified as dense lowland riparian characterized by a dense sub-canopy or shrub layer (regenerating canopy trees, willows, or other riparian shrubs) within 100 m (333 ft) of water. Over story in these habitats may be either large, gallery-forming trees (10-27 m [33-90 ft]) or developing trees (3-10 m [10-27 ft]), usually cottonwoods. Nesting habitats are found at low to mid-elevations (750-1820 m [2500-6000 ft]) in Utah. Cuckoos may require large tracts (40-80 ha [100-200 ac]) of contiguous riparian nesting habitat; however, cuckoos are not strongly territorial and home ranges may overlap during the breeding season. Nests are usually 1.2-2.4 m (4-8 ft) above the ground on the horizontal limb of a deciduous tree or shrub, but nest heights may range from 1-6 m (3-20 ft) and higher.

Although the Fish and Wildlife Service have listed this species as having potential to occur in the general area, the characteristics of its desired habitat are not located within the permit area and certainly not within the operations areas of the permit area. Potential for impact is highly unlikely.

Ferruginous Hawk. During breeding, flat and rolling terrain in grassland or shrub steppe is most often used. Ferruginous hawks avoid high elevations, forests, and narrow canyons, occurring in grasslands, agriculture lands, sagebrush / saltbush / greasewood shrub lands, and at the periphery of pinyon-juniper forests. Because of a strong preference for elevated nest sites, cliffs, buttes, and creek banks are usually present (Olendorff 1993). During winter, ferruginous hawks use open farmlands, grasslands, deserts, and other arid regions where lagomorphs, prairie dogs, or other major prey items are present (Olendorff 1993).

The Utah Conservation Data Center has occurrence records for Ferruginous Hawk nests within close proximity to the permit area. Since SCA's operations are limited to the existing refuse pile, and new surface disturbance is not anticipated, it is highly unlikely that mining operations could impact this species. However, operators should be aware of the species in the area. The largest potential impact to this species would be impacts by a dust plume.

Bald Eagle. The bald eagle is a rare, winter resident of this region of Utah, but no nesting of the bird is known to occur in the State of Utah. There is a remote possibility that trees in the area would be utilized for roosting.

Golden Eagle. The golden eagle is a year-round resident in the vicinity of the applicant's operations. Annual raptor surveys have been conducted since 1982 in conjunction with the UDWR. Map 322.220a shows locations of all known and monitored raptor nest sites. Exhibit 322.200a, Table 322.200f, Raptor Nest Sites Activity, lists nest sites and nesting activity since 1982. This table shows nest activity in accordance with USFWS and UDWR inventory procedures. Nests that were "tended" or "maintained" i.e., that had fresh greenery in them, are listed as active.

Until 1986, little success in hatching by raptors is assumed since no young birds were observed in nests. Several nests were obviously tended as evidenced by fresh greenery in the nests. Unless the birds hatched and fledged unusually early, there was no success in any of the nests observed from 1982 through 1985.

Spotted Owl. Little is known about this species of owl. It is not known to inhabit this part of Utah.

Flammulated Owl. This owl is found state-wide in Utah. Because of its nocturnal habits, no information is available for the permit area.

Williamson's Sapsucker. This species is an uncommon, summer resident in the permit area. Its presence was documented during the survey, to the north of the SCA - Star Point Permit Area during wildlife investigations conducted at the Beaver Creek Coal Mine

Black Swift. The UDWR has documented the presence of this bird in areas adjacent to the applicant's operations; however, it was not observed in the permit area during the field survey. It is a cliff-nesting species and resembles the white-throated swift except that it is all black and thus, highly visible.

Western Bluebird. This species is a year-round resident of the areas surrounding the permit area.

Some adverse impacts to birds will occur at the Refuse Pile area. However, because of the large amount of area in Carbon County of this same habitat type and the status of the birds involved, no serious impacts of any kind are anticipated. The potential impacts of mining to the "high interest" wildlife species are summarized in Exhibit 322.200a, Table 322.200e.

According to the Division of Wildlife Resources recent raptor surveys conducted from 1998 through 2002 in the vicinity of the project, no active raptor nest sites are within one half mile of mining activities. A copy of the correspondence from Division of Wildlife Resources is included in Exhibit 322.210a. One old stick nest, site 90-1, is located in close proximity to the remining operations. This was a stick nest was used by a Red Tailed Hawk in 1990 and was inactive in 1991. Other nest sites in the vicinity of the SCA - Star Point Permit Area are shown on Map 322.220a. Exhibit 322.200a, Table 322.200f describes inventoried raptor nests numbering from 28 nests in 1982 and increase through the years to 47 nests in 1999. According to the table, nests used by Golden Eagles are usually active one year and inactive the next. Generally, eagles use different nest sites within the same territory in consecutive years. The reasons for a nest being active one year or inactive for 3 years and active for one year again would be at best an assumption. The majority of birds or raptors using the inventoried nests do not use any nest consistently. Additional information regarding raptor density and nesting activity can be found in the “Utah

Field Office Guidelines for Raptor Protection from Human and Land Use Disturbances" prepared by Laura A. Romin and James A. Muck of the U.S Fish and Wildlife Service, Utah Field Office.

Reptiles and Amphibians

The material used in this portion of the report was derived from literature obtained from Utah State University's data retrieval program. Based on a review of the literature, it was determined that possibly 18 species of reptiles Exhibit 322.200a, Table 322.220c could occur within the Permit Area with 1 species known to occur, 9 likely to occur, and 8 potentially occurring. Literature pertaining to the amphibians and reptiles is extensive, but much of it refers to species occurring in the desert areas and has only limited reference to forms inhabiting high elevations in Utah. Most of the publications dealing with species lists for the state are old. The most up-to-date listing for the area under consideration may well be a checklist of Utah amphibians and reptiles (Tanner, 1975), and UDWR Publication No. 90-11 (Dalton et. al., 1990), which references a contiguous and similar geographic area.

Increasing elevation rapidly reduces the number and kind of reptiles and amphibians. In Utah, the more northern latitude reduces numbers of reptiles and amphibians in much the same way as does the increase in elevation. The geographical and associated climatic factors have eliminated most desert species, leaving species that are adapted either to mountain habitats or montane type habitats developed in the more northern areas. Thus, the reptiles and amphibians of Utah, and particularly those inhabiting the area under consideration, have arrived in Utah by means of dispersal lanes coming from the northeast and the southeast. With few exceptions, the species listed have side distributions and are versatile in their adaptive abilities.

The SCA - Star Point Permit Area is not considered to be a substantial value habitat to these species, but with reclamation, it could provide habitat for the future. All reptiles have some protection under the Utah code, but since the species listed are all widespread throughout similar habitats in Utah, none are treated as high interest species and, therefore, are not individually discussed.

Based on the literature review, it was determined that probably seven species of amphibians (Exhibit 322.200a, Table322.200c) inhabit the areas surrounding the Permit Area with two that have been observed and five that are likely to occur. All amphibians are legally protected in Utah, but since the species listed are all widespread throughout similar habitats in Utah, none are treated as high interest species, and, therefore, are not individually discussed.

Aquatic Resources

Water quality, physical habitat, and stream biota are all important components of aquatic resources. Water quality and hydrology are discussed in more detail in

Section 700. SCA operations are calculated to incur an annual depletion of approximately 22.5 acre feet. This occurs due to evaporation caused by dust control and sediment pond evaporation. For more detail on water depletion, see section 728.100.

The SCA - Star Point Permit Area is in the upper reaches of the Serviceberry Creek drainage, which is a tributary of the Miller Creek drainage. Additional information is contained in Exhibit 322.220a, Aquatic Resources of Plateau Mine Permit Area. No permanent or intermittent aquatic systems occur in the vicinity of any existing or planned surface facilities for the Permit Area. No aquatic resources have been determined to exist in any of the drainages occurring within the SCA - Star Point Permit Area. No surface waters in the permit area are considered as important game fisheries resources by the UDWR.

Wind erosion control measures and construction of sedimentation ponds, drainage ditches, clear water diversions, and water bars within SCA's disturbed areas assure protection from mining impact of aquatic resources far downstream from the mine. Occasional wildlife use of the sedimentation ponds was observed. The suitability of waters in the sedimentation ponds for wildlife is addressed in Exhibit 322.220b.

The aquatic resource description of Miller Creek consists of a review of available information from previous surveys. Biological samples were taken (1976 and 1979) with a modified Surber sampler according to standard methods (stratified random method, EPA, 1973). Analyses of data were made by the Aquatic Ecology Laboratory under the direction of Dr. Robert N. Winget, Department of Zoology, Brigham Young University. Certified laboratories including Ford Chemical and BYU Environmental Analysis Laboratories were used analyze the water quality.

Miller Creek below Hiawatha has a wide stream channel with a mean width 23 ft, and on 8 April 1976, the water width was only 8 feet with a mean depth of less than 0.3 ft. Stream substrates were relatively evenly distributed over rubble, gravel, sand, and silt. There was a considerable amount of coal dust evident in the substrate materials. Stream banks were moderately stable with sparse willow and grass cover.

Water quality in Miller Creek was very poor in 1976 and 1979 with TDS ranging from 2,000 to over 6,000 mg/l. Sulfate levels ranged from 1,100 to over 3,800 mg/l. Dissolved oxygen was always high but BOD was from 1 to 2 mg/l, oxygen was maintained by turbulence of the water. The high levels of dissolved solids come from the Mancos Shale formations at the stream source and along a considerable portion of its reach. Ammonia nitrogen was present on several occasions in excess of 7 mg/l. During 1976 nitrate nitrogen levels ranged from 0.4 to 1.4 mg/l N and phosphorous levels in the form of ortho-phosphorous were as high as 0.2 mg/l. This coupled with high levels of total and fecal coliform bacteria (greater than 1,000 and 70 MPN/100ml, respectively) indicated a strong source of organic pollution tied in closely to fecal contamination. In 1979 there was less evidence of organic pollution in Miller Creek -lower numbers of bacteria.

The invertebrate samples collected on Miller Creek at Station MCl on 8 April 1976 showed an extremely high dominance by chironomid midge larvae with numbers of 11,800/m2 (Table 1 of Exhibit 322.200a, Aquatic Resources of Plateau Mine Permit Area). The next dominant form was oligochaete worms, at 344/m^2. The community at this station was definitely under heavy stress.

In August 1979 there were 12 taxa of aquatic macroinvertebrates collected (Exhibit 322.220a, Table 1), all tolerant to sedimentation and moderately poor water quality. Chironomids were the dominant taxa collected as during 1976 but the low numbers indicated less organic enrichment in 1979 or some physical factor(s) was limiting the numbers of macroinvertebrates.

This stream section has historically been under water quality and habitat stress from natural as well as man caused factors. Potential for improvement is almost non-existent due to the extensive Mancos Shale and related formations of the area and limited water resources.

Miller Creek at Wattis Bridge, Station MC2, had 16 taxa of aquatic macroinvertebrates in samples collected August 1979 (Exhibit 322.220a, Table 1). All of the taxa sampled are tolerant to sedimentation and moderate to poor water quality. The mean number/m2 was only 847, which is quite low even for a small stream. This indicates that this stream has been under stress probably from low flows in the summer/fall/winter, scouring spring flows, sedimentation, low gradient including low water velocity, and a lack of quality riffle habitat in most of the stream. This was indicated by the presence of stratiomyids, ceratopogonids and oligochaetes. Compared with Station MCl, this station was somewhat better biologically speaking but still poor quality.

The aquatic macroinvertebrate samples taken Miller Creek Station MC3 on 8 April 1976 had approximately equal dominance by oligochaete worms and chironomid midge larvae, together comprising over 88% of the total number (Exhibit 322.220a, Table 1). The mayfly Baetis was next in abundance. Dominance by any of these 3 taxa is indicative of a stressed situation and their high numbers would indicate heavy organic enrichment as well as a significant siltation of the stream.This station, like the lower stations on Miller Creek has been, and still is, under stress from both poor water quality and habitat.

Miller Creek historically has experienced poor water quality conditions and because of this is of no use as a fishery and is of little value to aquatic resources in the area. Water source investigations completed in July of 1986 indicate a significant contribution of water as base flow originating from the Star Point Sandstone and Blackhawk Formations which contain tongues of Mancos Shale. The Mancos is notoriously bad for causing severe degradation of water quality. In this case significant degradation of water quality occurs in the Right Fork Stream with the inflow from the Star Point and Blackhawk Formations.

Table 742a

Diversion Ditch Peak Flow Design Data

Ditch No.	Acreage	Area (mi.^{2})	CCN	S' (in.)	Basin Length, L (ft)	Basin Average Grade (%)	Lag Time, t_L (hr)	Overall Storm Precip., P (in.)	Overall Storm Runoff, R (in.)	Time of Concentration, t_c (hr)	U.H. Time to Peak, t_p (hr)	Peak Flow, Q_p (cfs)	
												10yr-24hr	100yr-6hr
6B	7.6	0.0119	75	3.26	1,780	36	0.10	2.1	0.44	0.16	0.11	5.71	-
6C	13.9	0.0218	75	3.28	2,703	38	0.13	2.1	0.44	0.22	0.15	9.08	-
7E	4.3	0.0068	81	2.41	1,241	18	0.09	2.1	0.65	0.15	0.10	3.52	-
7G	7.6	0.0119	78	2.82	1,644	9	0.17	2.0	0.48	0.28	0.19	-	3.94
7H	1.7	0.0027	76	3.09	683	19	0.06	2.0	0.43	0.10	0.07	-	5.09
7J	1.4	0.0022	88	1.36	371	40	0.02	2.1	1.05	0.03	0.02	-	2.8
7K	0.4	0.0007	70	4.29	224	10	0.04	2.0	0.24	0.07	0.05	0.46	-
8	13.1	0.0204	70	4.29	1,698	12	0.19	2.0	0.24	0.31	0.21	-	2.45
14	221.8	0.3465	75	3.32	8,241	24	0.41	2.1	0.43	0.68	0.45	56.48	-
15A	1.7	0.0026	88	1.36	485	13	0.04	2.1	1.05	0.06	0.04	2.21	-
15B	0.3	0.0004	87	1.53	200	14	0.02	2.1	0.97	0.03	0.02	2.48	-
15Ba	1.5	0.0023	88	1.36	300	12	0.03	2.1	1.05	0.04	0.03	2.5	-
16A	0.6	0.0010	84	1.90	778	7	0.09	2.0	0.74	0.14	0.10	-	0.75
16B	0.7	0.0011	82	2.14	576	12	0.05	2.0	0.67	0.09	0.06	-	1.74
16Ba	0.9	0.0015	75	3.42	258	15	0.03	2.0	0.37	0.05	0.04	-	0.46
16C	0.5	0.0007	86	1.57	386	10	0.04	2.0	0.87	0.06	0.04	-	2.3
16D	2.6	0.0040	75	3.42	723	9	0.10	2.0	0.37	0.16	0.11	-	3.38
16E	2.5	0.0039	71	4.08	589	16	0.07	2.0	0.27	0.11	0.08	-	0.63
16Ea	3.4	0.0054	70	4.29	744	10	0.11	2.0	0.24	0.18	0.12	-	0.72
16F	3.1	0.0049	73	3.70	713	17	0.07	2.0	0.32	0.12	0.08	-	5.12
32	0.5	0.0008	70	4.29	158	23	0.02	2.0	0.24	0.03	0.02	-	0.11
33	0.3	0.0005	70	4.29	115	22	0.02	2.0	0.24	0.03	0.02	-	0.07
72A	1.3	0.0020	90	1.11	924	12	0.06	2.1	1.18	0.10	0.07	4.59	-
72B	0.2	0.0002	90	1.15	246	8	0.03	2.1	1.16	0.04	0.03	4.65	-
72C	0.2	0.0002	90	1.12	238	5	0.03	2.1	1.17	0.05	0.04	4.68	-
74A	1.6	0.0025	89	1.25	791	12	0.06	2.1	1.10	0.09	0.06	2.25	-
74Ab	1.0	0.0016	89	1.24	150	10	0.02	2.1	1.11	0.03	0.02	1.5	-
76	1.1	0.0018	70	4.29	518	22	0.05	2.0	0.24	0.09	0.06	-	0.24
77	1.2	0.0019	76	3.25	904	8	0.12	2.1	0.45	0.20	0.13	0.55	-
80A	3.8	0.0059	75	3.26	832	13	0.09	2.1	0.44	0.15	0.10	11.01	-
80B	0.3	0.0004	90	1.10	163	12	0.02	2.1	1.19	0.03	0.02	11.39	-
80C	0.7	0.0011	90	1.11	279	9	0.03	2.1	1.18	0.04	0.03	12.43	-
80D	2.3	0.0036	75	3.26	803	12	0.09	2.1	0.44	0.15	0.10	0.86	-
81	2.9	0.0046	72	3.97	860	14	0.10	2.0	0.28	0.16	0.11	-	4.53
82A	0.2	0.0003	90	1.10	236	15	0.02	2.1	1.19	0.03	0.02	0.28	-
82B	0.9	0.0014	90	1.10	495	16	0.03	2.1	1.19	0.05	0.04	1.33	-

Table 742c

Diversion Ditch Design Criteria

Ditch No.	Design Flow Rate, Q (cfs)	Manning's Roughness, n	Bottom Width, b (ft)	Side Slope, m (m/1 => H/V)	Minimum Slope Conditions						Maximum Slope Conditions						Current Depth (ft)	Available Freeboard (in.)	Lining Required?	Minimum Needed Rip Rap D_{50} (ft)
					Slope, S_o	*Area, A (ft^2)*	*Wetted Perimeter, P_w (ft)*	*Hydraulic Radius, R_h (ft)*	*Velocity, v (ft/s)*	*Depth, y_o (ft)*	*Slope, S_o*	*Depth, y_o (ft)*	*Area, A (ft^2)*	*Wetted Perimeter, P_w (ft)*	*Hydraulic Radius, R_h (ft)*	*Velocity, v (ft/s)*				
6B	5.7	0.03	2.5	1.3	0.018	1.61	4.17	0.39	3.52	0.51	0.050	0.36	1.08	3.69	0.29	4.87	1.50	11.9	**NO**	
6C	9.1	0.03	2.5	2	0.010	2.90	5.77	0.50	3.13	0.73	0.020	0.61	2.26	5.22	0.43	4.01	1.50	9.2	NO	-
7E	3.5	0.03	2.7	0	0.040	0.87	3.34	0.26	4.03	0.32	0.143	0.21	0.58	3.13	1.00	18.73	1.00	8.1	**NO**	Variance[3]
7G	3.9	0.03	0	2	0.010	1.48	3.85	0.39	2.62	0.86	0.010	0.86	1.48	3.85	0.39	2.62	1.50	7.7	NO	-
7H	5.1	0.03	3	2	0.067	1.03	4.29	0.24	4.95	0.29	0.164	0.21	0.71	3.93	0.18	6.43	0.75	5.5	**YES**	0.5
7J	**2.8**	**0.035**	**3**	**2**	**0.200**	**0.53**	**3.72**	**0.14**	**5.19**	**0.16**	**0.440**	**0.13**	**0.42**	**3.58**	**0.12**	**6.79**	**1.00**	**10.1**	**YES**	**0.5**
7K	**0.5**	**0.035**	**3**	**2**	**0.100**	**0.22**	**3.31**	**0.07**	**2.20**	**0.07**	**0.300**	**0.05**	**0.16**	**3.22**	**0.05**	**3.07**	**1.00**	**11.2**	**YES**	**0.25**
8	2.5	0.03	0.1	5.3	0.080	0.59	3.61	0.16	4.20	0.33	0.120	0.30	0.51	3.35	0.15	4.90	0.80	5.7	NO	-
14	56.5	0.023	(half-round CMP D = 54")		0.053	4.37	5.40	0.81	12.92	1.44	0.260	0.96	2.48	4.32	0.57	22.76	2.25	9.8	**YES**	concrete slopes >10%
15A[1]	2.2	0.03	0	2	0.11	0.39	1.98	0.20	5.58	0.44	0.130	0.43	0.37	1.92	0.19	5.95	0.75	3.7	**YES**	0.5 if slope >8%
15B	2.5	0.03	0	2	0.1	0.45	2.12	0.21	5.56	0.47	0.100	0.47	0.45	2.12	0.21	5.56	0.75	3.3	**YES**	0.5 if slope >10%
15Ba	2.5	0.03	0	1.5	0.015	0.18	1.26	0.15	1.68	0.35	0.050	0.25	0.09	0.90	0.10	2.45	0.75	4.8	NO	-
16A	0.8	0.03	0.1	4	0.04	0.31	2.29	0.13	2.60	0.27	0.060	0.24	0.26	2.11	0.12	3.02	0.80	6.4	**YES**	-
16B	1.7	0.03	0.1	4	0.040	0.54	3.04	0.18	3.14	0.36	0.030	0.38	0.60	3.19	0.19	2.82	0.80	5.3	**YES**	-
16Ba	0.5	0.03	1	2	0.040	0.21	1.70	0.12	2.43	0.16	0.100	0.12	0.15	1.54	0.10	3.32	0.75	7.1	NO	-
16C	2.3	0.03	0.1	4	0.040	0.68	3.39	0.20	3.38	0.40	0.060	0.37	0.58	3.15	0.19	3.95	0.80	4.8	**YES**	-
16D	3.4	0.03	0.1	4	0.040	0.91	3.93	0.23	3.73	0.46	0.060	0.43	0.78	3.64	0.21	4.34	0.80	4.0	**YES**	-
16E	0.6	0.03	0.1	4	0.073	2.51	6.53	0.38	7.08	0.78	0.011	0.22	0.21	1.91	0.11	1.21	0.80	0.2	**YES**	-
16Ea	0.7	0.03	1	2	0.040	0.26	1.84	0.14	2.68	0.19	0.100	0.15	0.19	1.65	0.11	3.69	0.75	6.7	NO	-
16F	5.1	0.03	0.1	4	0.040	1.23	4.58	0.27	4.13	0.54	0.060	0.50	1.06	4.24	0.25	4.81	0.80	3.1	**YES**	0
18A	1.6	0.03	0	1.5	0.003	1.16	3.17	0.37	1.39	0.88	0.019	0.62	0.58	2.24	0.26	2.77	1.40	6.2	NO	
18B	0.3	0.03	0	1.5	0.005	0.28	1.55	0.18	1.11	0.43	0.005	0.43	0.28	1.55	0.18	1.11	1.00	6.8	NO	
18C	2.1	0.03	0	1.5	0.038	0.54	2.16	0.25	3.83	0.60	0.050	0.57	0.49	2.06	0.24	4.24	1.10	6.0	NO	
18D	2.2	0.03	3	1.5	0.022	0.84	3.90	0.22	2.65	0.25	0.085	0.17	0.55	3.61	0.15	4.13	0.80	6.6	NO	
18E	2.2	0.03	3	1.5	0.050	0.62	3.69	0.17	3.39	0.19	0.120	0.15	0.48	3.54	0.14	4.55	1.00	9.7	NO	
32	0.1	0.03	0.6	2.6	0.100	0.60	2.72	0.22	5.74	0.38	0.100	0.06	0.05	0.95	0.05	2.12	0.60	2.6	NO	-
33	0.1	0.03	0.6	6.7	0.060	0.05	1.32	0.04	1.38	0.05	0.060	0.05	0.05	1.32	0.04	1.38	0.60	6.6	NO	-
72A	4.6	0.038	3	2	0.060	1.16	4.43	0.26	3.93	0.32	0.290	0.20	0.69	3.90	0.18	6.62	1.40	13.0	**YES**	0.5 if slope >10%
72B	4.7	0.035	2	2	0.125	0.81	3.38	0.24	5.78	0.31	0.125	0.31	0.81	3.38	0.24	5.78	1.50	14.3	**YES**	0.5 if slope >10%
72C	4.7	0.035	2	2	0.065	1.02	3.66	0.28	4.61	0.37	0.065	0.37	1.02	3.66	0.28	4.61	1.50	13.5	NO	-
74A	2.3	0.03	0	2	0.090	0.44	2.09	0.21	5.24	0.47	0.090	0.47	0.44	2.09	0.21	5.24	0.60	1.6	**YES**	0.5
74Ab	1.5	0.03	0	4	0.030	0.64	3.30	0.19	2.88	0.40	0.060	0.20	0.16	1.65	0.10	2.56	0.80	4.8	NO	-
76	0.2	0.03	0.1	6.3	0.120	0.09	1.54	0.06	2.62	0.11	0.120	0.11	0.09	1.54	0.06	2.62	0.63	6.2	NO	-
77[2]	0.6	0.03	0.1	4	0.060	-	-	-	-	0.31	0.080	0.32	0.29	1.95	0.15	4.10	1.00	8.3	NO	-
80A	11.0	0.038	6	2	0.050	2.59	7.71	0.34	4.23	0.38	0.065	0.35	2.37	7.58	0.31	4.60	1.00	7.4	**YES**	0.5 if slope >7%
80B	11.4	0.03	10	10	0.010	5.19	17.58	0.30	2.20	0.377	0.010	0.38	5.19	17.58	0.30	2.20	1.00	7.5	**YES**	0.5 if slope >5%
80C	12.4	0.042	10	2	0.240	2.12	10.91	0.19	5.82	0.204	0.240	0.20	2.12	10.91	0.19	5.82	1.00	9.6	**YES**	0.5
80D	0.9	0.03	1	1	0.026	0.59	2.17	0.27	3.33	0.414	0.026	0.41	0.59	2.17	0.27	3.33	1.00	7.0	NO	-
82A	0.2	0.03	0	2	0.005	0.11	1.05	0.11	0.78	0.235	0.016	0.19	0.07	0.85	0.08	1.21	0.75	6.2	NO	-
82B	1.3	0.03	0	2	0.002	0.64	2.52	0.25	0.77	0.564	0.090	0.28	0.15	1.23	0.12	3.68	1.00	5.2	NO	-

[1] Ditch geometry assumed the same as for Ditch 15B.
[2] Channel geometry varies. Some values taken from CPMC permit. However, peak flows have now decreased, making the design conservative.
[3] Variance was granted since channel had already eroded down to bedrock.

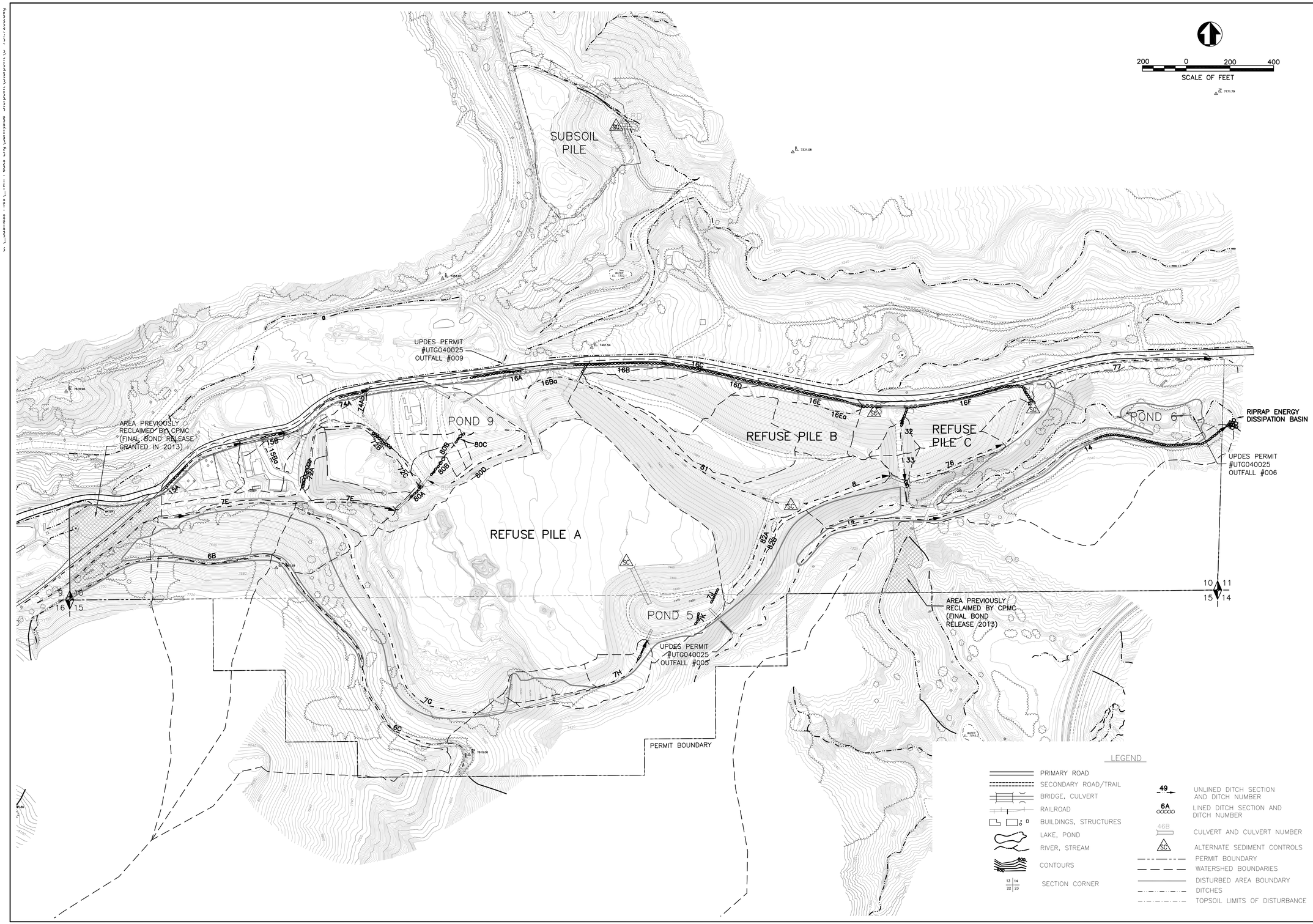

LICENSED PROFESSIONAL ENGINEER
STATE OF UTAH
Electronically signed by S. Scott Carlson 9-2-16

SCA / STAR POINT WASTE FUEL
REFUSE PILE SURFACE WATER DRAINAGES AND DIVERSIONS

TWIN PEAKS
Engineering & Land Surveying
2264 NORTH 1450 EAST LEHI, UTAH 84043
(801) 450-3511, (801) 439-0700 FAX

DWG DATE: SEPT 2014

PLOT DATE: 06 May 2016

SHEET 731.720a

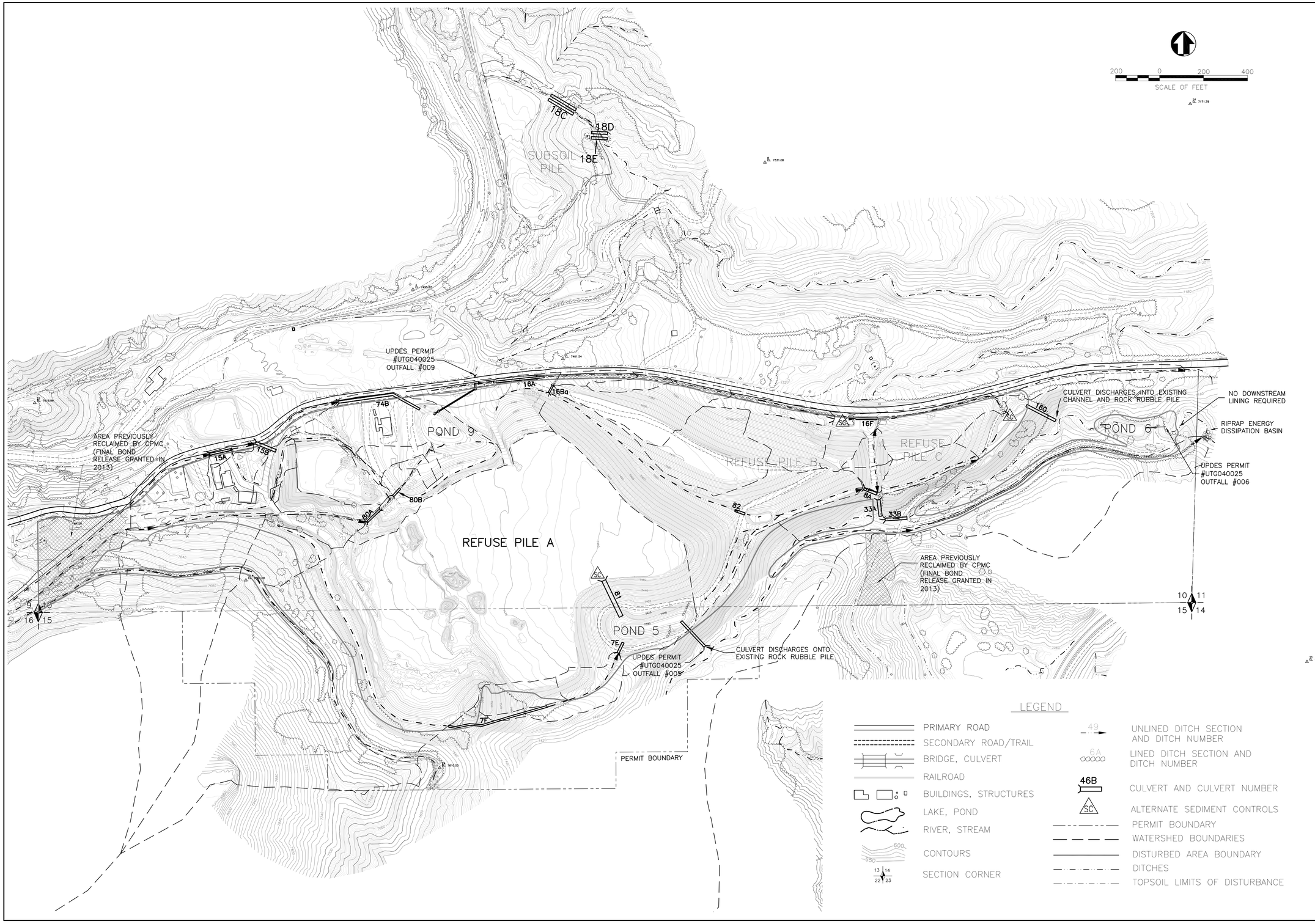

STATE OF UTAH LICENSED PROFESSIONAL ENGINEER 187727 SCOTT CARLSON

Electronically signed by S. Scott Carlson 5-6-16

SCA / STAR POINT WASTE FUEL REFUSE PILE SURFACE WATER CULVERTS

TWIN PEAKS Engineering & Land Surveying
2264 NORTH 1450 EAST LEHI, UTAH 84043
(801) 450-3511, (801) 439-0700 FAX

DWG DATE: MAY 2014

PLOT DATE: 06 May 2016

SHEET

731.720b

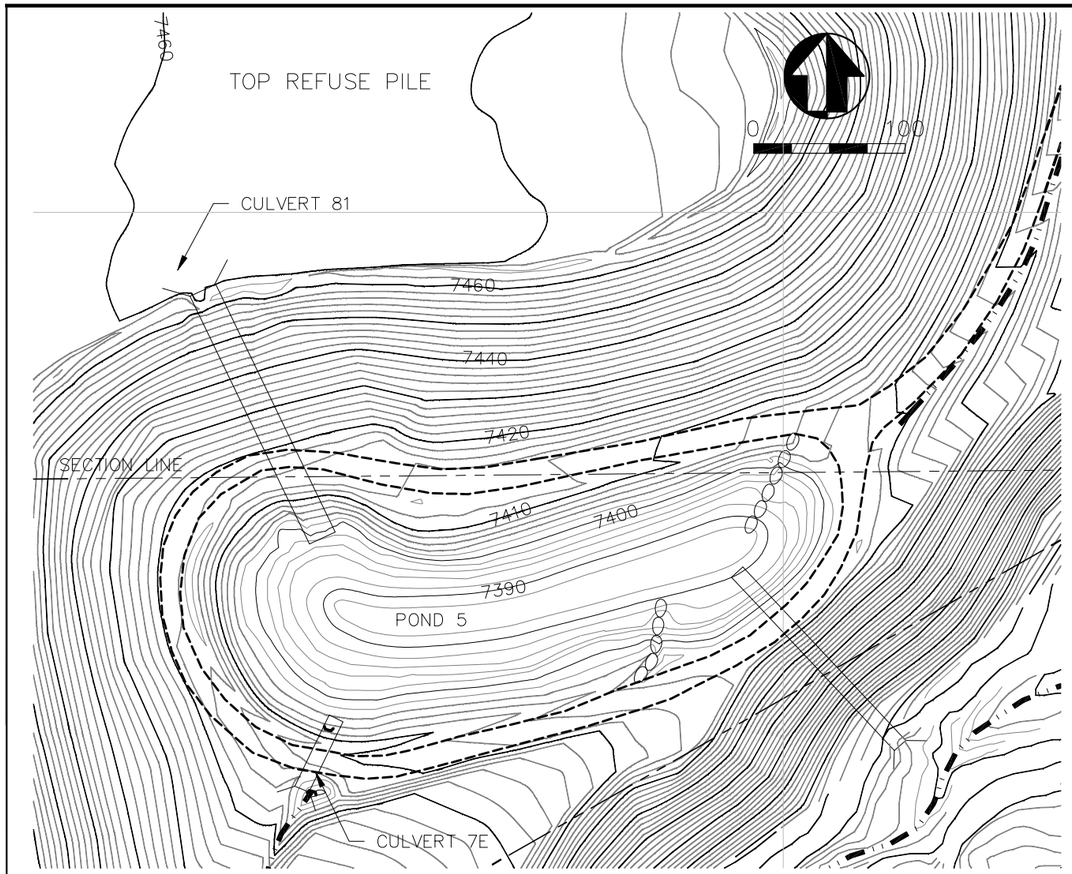

Plan View

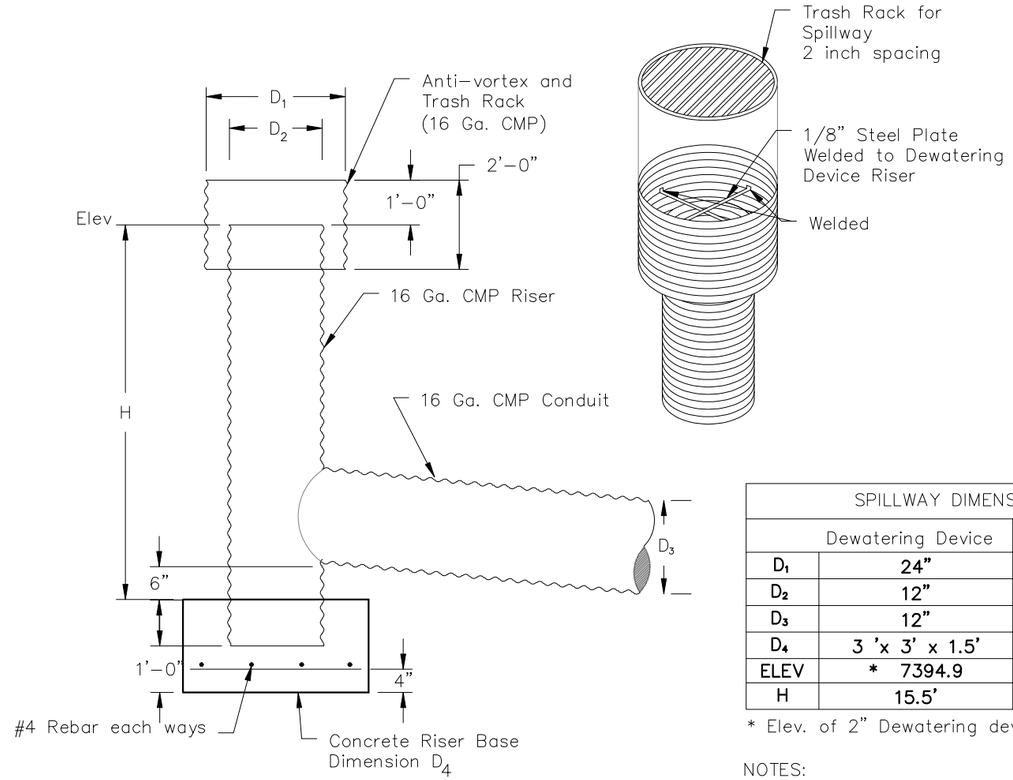

Riser Detail

N. T. S.

SPILLWAY DIMENSIONS		
	Dewatering Device	Emergency
D_1	24"	42"
D_2	12"	30"
D_3	12"	27"
D_4	3 'x 3' x 1.5'	4' x 4' x 2'
ELEV	* 7394.9	7401.3
H	15.5'	15.5'

* Elev. of 2" Dewatering device

NOTES:

1. Cylinder should be welded to top of the riser.
2. Support bars and trash rack are #6 rebar.
3. Trash rack for spillway should be welded to cylinder.

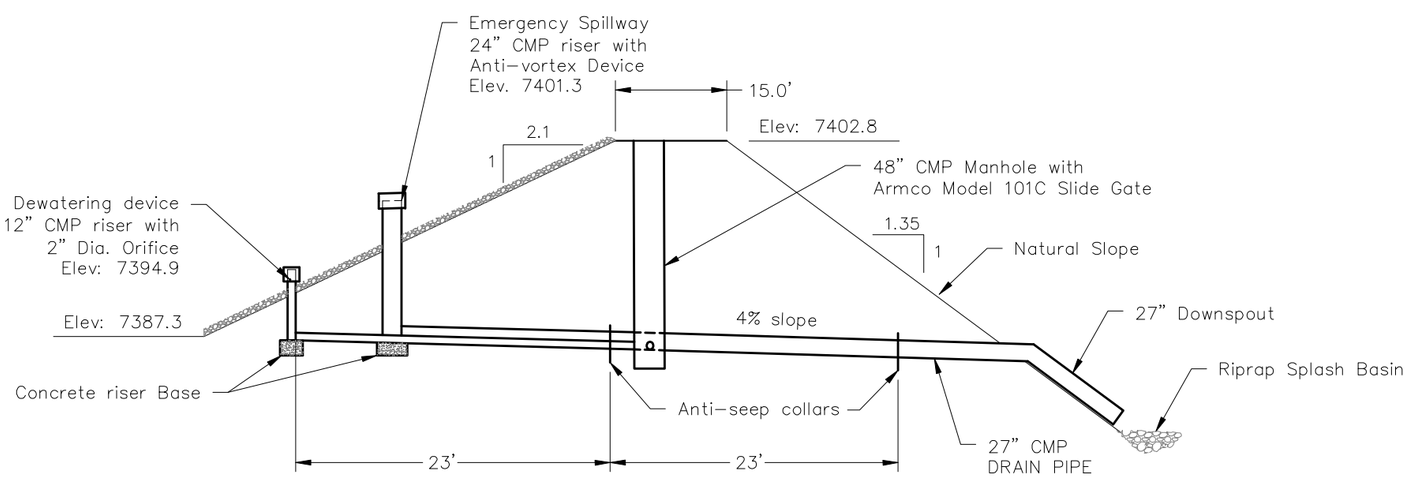

Note: 2" ø automatic dewatering orifice is for gradual release of stored water

Section

N. T. S.

Note:
Twin Peaks did not inspect existing pond construction. It is assumed that the pond embankments were installed in accordance with the original design standards and specifications contained in UMC Plateau Mine Runoff control plan prepared by Vaughn Hansen and associates, December, 1979.

LICENSED PROFESSIONAL ENGINEER
S. SCOTT CARSON
187727
STATE OF UTAH
Electronically signed by: S. Scott Carson
5-6-16

SCA / STAR POINT WASTE FUEL
SEDIMENT POND NO. 5 WITH DETAILS

TWIN PEAKS
Engineering & Land Surveying
2264 NORTH 1450 EAST LEHI, UTAH 84043
(801) 450-3511, (801) 439-0700 FAX

DWG DATE: MAY 2016
PLOT DATE: 06 May 2016

SHEET
733.120a

DETERMINATION OF BOND AMOUNT - Summary

ITEM		RATE		COST
Total Construction Management	See Page 2		$	59,987
Total Backfill and Grading	See Page 2		$	386,036
Total Demolition and Disposal	See Page 3		$	34,075
Total Revegetation	See Page 4		$	343,571
Total (Direct Costs)			**$**	**823,668**
Mobilization and Demobilization		**10%**	$	82,367
Contingency		**5%**	$	41,183
Engineering Redesign		**2.5%**	$	20,592
Main Office Expense		**6.8%**	$	56,009
Project Management Fee		**2.5%**	$	20,592
Total (Indirect Costs)			**$**	**220,743**
Total (Direct and Indirect Costs - 2015 dollars)			**$**	**1,044,411**
Escalation 6 years to Mid Term 2021	1 yr	**0.70%**	$	7,311
	1 yr	**0.70%**	$	7,362
	1 yr	**0.70%**	$	7,414
	1 yr	**0.70%**	$	7,465
	1 yr	**0.70%**	$	7,518
	1 yr	**0.70%**	$	7,570
Total Reclamation Costs (2021 dollars)			$	1,089,052
Bond Amount Required (Rounded to the nearest $1,000)			**$**	**1,089,000**

DETERMINATION OF BOND AMOUNT - Construction Mgt and Backfill & Grading

ITEM	QUANTITY		PRODUCTION RATE		HOURS REQUIRED	UNIT COST	COST
Construction Management							
Foreman and 4x4 pickup	3.5	Months	174	hr/mo	609	$ 51.00	$ 31,059
Water Truck	3.5	Months	87	hr/mo	304.50	$ 95.00	$ 28,928
Total Construction Management							**$ 59,987**
Backfilling and Grading							
General site grading: Reshape pile slope, pond regrading, Refuse Cleanup, remove temporary berms and regrade roads and **Drainage needs**							
D-10 Dozer	275,000	Cubic Yards	700	cy/hr	393	$ 278.00	$ 109,214
Redistribute **subsoil** over refuse covered areas							
C-631 Scraper	235,700	Cubic Yards	375	cy/hr	629	$ 224.00	$ 140,791
D-10 Dozer (one dozer to assist loading four scrapers)					157	$ 278.00	$ 43,683
D-10 Dozer (spread soil on slopes - 50% of quantity)	117,850	Cubic Yards	700	cy/hr	168.36	$ 278.00	$ 46,803
Gouging of the disturbed area (.5 cy/ 6'x6' area)	86.56	Acres					
Track Excavator 325 CL (2yd bucket)	52,369	Cubic Yards	240	cy/hr	218	$ 143.00	$ 31,203
Ripping (minimum of 24" depth) compacted areas	29.00	Acres					
D-10 Dozer with multishank ripper	70,180	Cubic Yards	3,000	cy/hr	23	$ 278.00	$ 6,503
Refuse Sampling for Acid / Toxic Potential	25	samples				$ 269.50	$ 6,738
Soil Sampling for Vegetative Purposes	10	samples				$ 110.00	$ 1,100
Total Backfill and Grading							**$ 386,036**

DETERMINATION OF BOND AMOUNT - Demolition and Disposal

	Length (ft)	Width (ft)	Height (ft)	Gross Volume (cf)	Unit Price $/cubic ft	Total
Building 17						
Concrete Floor	41	76	0.5	1558	0.97	1,512
Concrete Floor	14	60	0.5	420	0.97	408
Footings (assume 6sqft cross section)	382			2292	0.97	2,225
Bldg 17 Total						4,145
Building 18						
Concrete Floor	40	67	0.5	1340	0.97	1,301
Footings (assume 6sqft cross section)	214			1284	0.97	1,246
Bldg 18 Total						2,547
Building 19						
Concrete Floor	20	93	0.5	930	0.97	903
Footings (assume 6sqft cross section)	226			1356	0.97	1,316
Bldg 19 Total						2,219
Building 35a						
Concrete pad	38	25	0.5	475	0.97	461
Concrete containment walls	126		4	504	0.97	489
Bldg 35 Total						950
Building 75 Shop Building						
Concrete Pad	50	80	0.5	2000	0.97	1,941
Footings (assume 6sqft cross section)	260			1560	0.97	1,514
Bldg 75 Total						3,456
	Length	CuYds	Tons	CuFt	Unit Price	Total
Concrete Lined drainage, removal and disposal						
Track Excavator 325 CL	650	105		2827	$ 0.53	$ 1,497
Disposal			147	2827	0.97	$ 2,745
Total Concrete Removal Costs						$ 4,242
	Length	CuYds	Tons	CuFt	Unit Price	Total
Culvert excavation, removal & disposal	2264					
Track Excavator 325 CL		867		23409	$ 0.35	$ 8,265
Disposal			1100		$ 7.50	$ 8,250
Total Culvert Costs						$ 16,515
Total Demolition and Disposal						$ 34,075

Concrete Demolition and Onsite Disposal			
Break up and/or Crush	$	7.65	/cubic yard
Load into truck (1.3 swell)	$	2.10	/cubic yard
Haul approximately 1/2 mile (1.3 swell)	$	5.13	/cubic yard
Dispose on site (1.3 swell)	$	11.33	/cubic yard
	$	26.21	/cubic yard
	$	0.97	/cubic foot

Note: Concrete lined drainages identified for reclamation are included above. Riprap lined drainages are included as general site grading

DETERMINATION OF BOND AMOUNT - Revegetation and Erosion Control

ITEM	QUANTITY		UNIT COST	COST
Sagebrush Revegetation Areas				
Seed Material Costs	80.60	Acres	$ 386.00	$ 31,112
Additional Seed Material Costs (northern sweetvetch)	10.00	Acres	$ 360.00	$ 3,600
Application (Hydroseeding - w/ 1000lb/ac mulch and tack)	80.60	Acres	$ 1,200.00	$ 96,720
Straw Mulch (2 tons per acre) Materials and labor	80.60	Acres	$ 1,750.00	$ 141,050
Erosion Control				
Silt fences (Means 312513101000)	2,500	Linear Feet	$ 0.95	$ 2,375
Subtotal Revegetation	80.60	Acres		$ 274,857
Reseeding 25%	20.15	Acres		$ 68,714
Total Revegetation				$ 343,571

LINED DRAINAGE RECLAMATION DETAILS

Lined Ditch No.	Bottom Width, b (ft)	Side Slope, m (m/1 => H/V)	Length of Lined segments	Current Depth (ft)	Available Freeboard (in.)	Current Rip Rap D50 (ft)
7H	3	2	80	0.75	5.5	0.5
7J	3	2	85	1.00	10.1	0.5
7K	3	2	70	1.00	11.2	0.25
15A	0	2	150	0.75	3.7	0.5
15B	0	2	90	0.75	3.3	0.5
72A	3	2	150	1.40	13.0	0.5
72B	2	2	120	1.50	14.3	0.5
74A	0	2	100	0.60	1.6	0.5
80A	6	2	90	1.00	7.4	0.5
80B	10	10	110	1.00	7.5	0.5
80C	10	2	70	1.00	9.6	0.5
Total riprap lined drainages			**1115**	**ft**		

Lined Ditch No.	Bottom Width, b (ft)	Side Slope, m (m/1 => H/V)	Length of Concrete Lined segments	Current Depth (ft)	Conc Perimeter section (ft)	Conc volume (4" thickness) (cuyd)
14	**3**	**2**	650	2.25	13.1	105
16 A-F	Ditch 16 to remain with county road drainage system. Concrete lining will not be removed					
Total Concrete lined drainages			**650 ft**			

EQUIPMENT PRODUCTION

(Caterpillar Performance Handbook)

CAT 631 SCRAPER	
Slope ranges	2% - 6%
Haul Distance Ranges	1500-3000 ft (one way)
Production	400 - 600 bank cubic yards / hour
CAT D 10 DOZER	
100 ft ave dozing distance	1800 loose cubic yards / hour
300 ft ave dozing distance	700 loose cubic yards / hour
600 ft ave dozing distance	375 loose cubic yards / hour
MULTISHANK RIPPER on D 10 DOZER	
Seismic Velocity Rate for Topsoil	3000 ft/sec
Production (ideal conditions)	3000 BCY/hr
Track Excavator 325	2 yard bucket
Cycle time	0.4 minutes
Riprap Placement efficiency	60%
Riprap production rate	180 yds/hour
Slope gouging 80% efficiency	240 yds/hour
Culvert Ex: 10% eff, 1 yd bucket	15 yds/hour

Equipment Costs

Based on 2015 Rates from Nelco Contractors, Scamp Excavation and from Nielson Construction
Total Hourly Costs with Operator included

	Scamp	Nelco	Nielson	Average Rates used in Bond Calculation
Standard Crawler Dozer				
D10N - Scamp	$ 220.00			
D8L - Nelco		$ 210.00		
D10 - Nielson			$ 405.00	$ 278.00
Single Engine Conventional Scraper				
631 Scamp	$ 200.00			
621B Nelco		$ 197.00		
631E - Nielson			$ 275.00	$ 224.00
Multi-Shank Ripper				
Included with Dozer	$ -	$ -	$ -	$ -
Off-Highway Water Truck				
Water Truck - Scamp	$ 90.00			
Water Truck + Driver - Nelco		$ 95.00		
4000 Gal w driver - Nielson			$ 100.00	$ 95.00
On-Highway Light Duty Truck - gas powered				
4x4 pickup included w/ supervisor - Scamp	$ 38.00			
4x4 pickup included with foreman - Nelco		$ 56.00		
4x4 pickup included with foreman - Nielson			$ 60.00	$ 51.00
Track Excavator				
420- Scamp	$ 140.00			
325- Nelco		$ 140.00		
325 - Nielson			$ 150.00	$ 143.00

Scamp Excavation, Inc.
PO Box 50, Wellington, UT 84542
"24 hours a day, 7 days a week/Have transport will travel"

Rate Sheet
July 2015

Customer:
Sunnyside CoGeneration Power Plant

Equipment	Rate Per Hour	Equipment	Rate per Hour
750 Excavator 85 ton	$165.00	Supervisor	$38.00
350L Excavators	$155.00	Leadman	$35.00
420 Excavators	$140.00	Skilled Labor	$35.00
330 Excavators w/Hammer	$140.00	Laborer	$32.00
330 Excavators	$110.00	Rock Drill	$250.00
300 Excavators w/Hammer	$135.00	50 ton Lowboy Transport	$95.00
200 Series Excavators	$100.00	75 ton Lowboy Transport	$150.00
Mini Excavator w/Hammer Attach	$100.00	Water Trucks	$90.00
Mini Excavators	$75.00	6x6 Water Trucks	$90.00
D10-N Bulldozers	$220.00	Vacuum Water Trucks	$90.00
D9L Bulldozers	$210.00	Vacuum Water Trailers	$100.00
D9R Bulldozers	$185.00	2 - 80 BBL Water Tankers (w/PUP)	$120.00
D9G & D155 Bulldozers	$140.00	621 Water Wagon	$120.00
Cat 834 Wheeled Bulldozer	$120.00	Rock Trucks 40 Ton	$185.00
D6 - 6 Way Bulldozer	$95.00	Rock Trucks 30 Ton	$140.00
D5 - 6Way Bulldozer	$90.00	10 Wheeler Dump Trucks	$85.00
Volvo Grader	$110.00	End Dump Trailers	$90.00
163H Graders	$100.00	Belly Dump Trailers	$90.00
Champion/Wabco Graders	$90.00	Crane: 20 Ton	$90.00
631 Scrapers	$200.00	Pipe Truck	$60.00
13 cuyd Scrapers	$160.00	Service Trucks	$75.00
988B Loader	$120.00	Pilot Trucks	$50.00
Mega 500 Loader	$120.00	6x6 Military Truck	$55.00
Mega 400 Loader	$100.00	Pick Up Trucks	$40.00
Loaders	$95.00	Hydra Seeder	$100.00
416B Backhoe	$75.00	Jumping Jack	$35.00
Breaker Bobcat	$90.00	Pump	$20.00
Skid Steer	$55.00	Laser	$20.00
Forklifts	$85.00	Air Shovel	$45.00
Small Trencher	$70.00		
48" Compactor	$75.00		
80" Compactor	$80.00		
Fuser Machine: 2" to 8"	$60.00		
Fuser Machine: 10" to 18"	$70.00		

Rates include Operator
For other equipment not listed, rates are available upon request
Rates are subject to change without notice
Materials are Charged Our Cost Plus 20% Service Charge

Nelco Contractors, Inc.

LABOR & EQUIPMENT RATE SHEET -- 6/1/15

Description	REGULAR	OVERTIME
FOREMAN	$ 56.00	$ 76.00
LABOR, UNSKILLED	$ 35.00	$ 51.00
SKILLED LABOR	$ 41.00	$ 57.00
DRIVER	$ 45.00	$ 61.00
OPERATOR	$ 45.00	$ 61.00
WELDER	$ 90.00	$ 108.00
SHOP MECHANIC	$ 70.00	$ 88.00
MECHANIC W/SERVICE TRUCK	$ 140.00	$ 158.00
FUEL/LUBE SERVICE TRUCK	$ 130.00	$ 148.00
CAT 5H DOZER	$ 115.00	$ 131.00
CAT D6M DOZER	$ 130.00	$ 146.00
CAT D8N DOZER	$ 190.00	$ 206.00
CAT D8R DOZER	$ 190.00	$ 206.00
CAT D8L DOZER	$ 210.00	$ 226.00
SNOWCAT (8 hr. minimum)	$ 145.00	$ 161.00
BOWL SCRAPER 621B	$ 197.00	$ 213.00
KOMATSU 380 LOADER	$ 115.00	$ 131.00
KOMATSU 380 LOADER W/SNOW EQUIPMENT	$ 140.00	$ 156.00
KOMATSU 450 LOADER	$ 150.00	$ 166.00
KOMATSU 500 LOADER	$ 165.00	$ 181.00
KOMATSU 500 LOADER W/SNOW EQUIPMENT	$ 178.00	$ 194.00
KOMATSU 600 LOADER	$ 225.00	$ 241.00
CAT 950 LOADER	$ 122.00	$ 138.00
CAT 966 LOADER	$ 135.00	$ 151.00
CAT 966 LOADER W/SNOW EQUIPMENT	$ 150.00	$ 166.00
CAT 966 LOADER W/V PLOW	$ 160.00	$ 176.00
SKID STEER LOADER	$ 90.00	$ 106.00
CAT 420 BACKHOE	$ 92.00	$ 108.00
CASE 580 BACKHOE	$ 92.00	$ 108.00
TRENCHER VERMEER	$ 145.00	$ 161.00
200 EXCAVATOR	$ 125.00	$ 141.00
220 EXCAVATOR	$ 135.00	$ 151.00
220 EXCAVATOR W/ROCK HAMMER	$ 205.00	$ 221.00
220 EXCAVATOR W/SCREEN	$ 185.00	$ 201.00
300 EXCAVATOR	$ 155.00	$ 171.00
320 EXCAVATOR	$ 125.00	$ 141.00
322 EXCAVATOR	$ 135.00	$ 151.00
325 EXCAVATOR	$ 140.00	$ 156.00
325 EXCAVATOR W/SCREEN	$ 195.00	$ 211.00
330 EXCAVATOR	$ 155.00	$ 171.00
400 EXCAVATOR	$ 205.00	$ 221.00
MINI EXCAVATOR	$ 90.00	$ 106.00

Nelco Pg 2
2015

CAT 140 GRADER	$ 135.00	$ 151.00
CAT 140 GRADER W/SNOW EQUIPMENT	$ 152.00	$ 168.00
CAT 14 GRADER	$ 162.00	$ 178.00
CAT 14 GRADER W/SNOW EQUIPMENT	$ 185.00	$ 201.00
CAT 16 GRADER	$ 210.00	$ 226.00
CAT 16 GRADER W/SNOW EQUIPMENT	$ 240.00	$ 256.00

FORKLIFT	$ 85.00	$ 101.00
BROOM STREET SWEEPER	$ 85.00	$ 101.00
RAYGO SMOOTH ROLLER COMPACTOR	$ 72.00	$ 88.00
BOMAG SMOOTH ROLLER COMPACTOR	$ 125.00	$ 141.00
CAT SHEEPSFOOT ROLLER COMPACTOR	$ 125.00	$ 141.00
DYNAPAC SHEEPSFOOT ROLLER COMPACTOR	$ 110.00	$ 126.00
WACKER REMOTE CONTROL TRENCH ROLLER COMPACTOR	$ 55.00	$270.00 / day
HAND COMPACTOR	$ 15.00	$ 90.00 / day

AGRI. TRACTOR W/ LARGE DISC	$ 110.00	$ 126.00
AGRI. TRACTOR ONLY	$ 100.00	$ 116.00
AGRI. TRACTOR W/ RANGELAND SEED DRILL	$ 154.00	$ 170.00

HYDRO-EXCAVATOR	$ 245.00	$ 261.00
HYDRO-EXCAVATOR TRAVEL	$ 185.00	$ 201.00
WINCH TRUCK	$ 130.00	$ 146.00
TRACTOR W/TRAILER	$ 110.00	$ 126.00
TRANSPORT------Hourly rate of equipment being hauled with minimum of $140.00 / HR. ($156.00 / HR O.T.)	$ 140.00	$ 156.00
BELLY DUMP	$ 115.00	$ 131.00
BELLY DUMP W/DOUBLE TRAILERS	$ 125.00	$ 141.00
SIDE DUMP	$ 115.00	$ 131.00
SUPER END DUMP	$ 115.00	$ 131.00
END DUMP	$ 100.00	$ 116.00
BUCKET TRUCK -- 2 TON	$ 100.00	$ 116.00
1 TON TRUCK W/30' TRAILER (NO OPERATOR)	$ 48.00	------
100 BBL VACUUM TRUCK	$ 110.00	$ 126.00
120 BBL VACUUM TRUCK	$ 120.00	$ 136.00
WATER TRUCK DAILY RENTAL WITHOUT DRIVER		$400.00 / day
PILOT CAR	$ 90.00	$ 106.00
23 TON BOOM TRUCK	$ 150.00	$ 166.00
SERVICE/LUBE/FUEL TRUCK	$ 125.00	$ 141.00

FIRE TRUCK	-----	$325.00 / day + fuel
4" FUSION MACHINE	$ 20.00	$ 90.00 / day
8" FUSION MACHINE	$ 30.00	$140.00 / day
12" FUSION MACHINE	$ 35.00	$250.00 / day
18" FUSION MACHINE	$ 45.00	$310.00 / day
TRACSTAR 20" FUSION MACHINE	$ 65.00	$415.00 / day
BRANCH SADDLE MACHINE	$ 30.00	$125.00 / day
2000 WATT GENERATOR	$ 15.00	$ 60.00 / day
3500 WATT GENERATOR	$ 15.00	$ 60.00 / day
5000 WATT GENERATOR	$ 25.00	$ 70.00 / day
8000 WATT GENERATOR	$ 40.00	$100.00 / day

Nelco Pg 3
2015

4000 GALLON WATER TRUCK DAILY RENTAL WITHOUT OPERATOR		$406.00 / day + fuel
40' FLATBED TRAILER		$42.00 / day
30' VAN TRAILER	$ 42.00 / day	$1,260.00 / month
UTILITY TRAILER	$ 15.00	$ 60.00 / day
CUT-OFF-SAW	$ 15.00	$ 77.00 / day
PIPE THREADER	$ 25.00	$ 86.00 / day
AIRLESS PAINT SPRAYER	$ 25.00	$ 100.00 / day
CONCRETE DRILL HILTI	$ 20.00	$ 90.00 / day
185 COMPRESSOR	$ 25.00	$135.00 / day
185 COMPRESSOR W/DRILL	$ 30.00	$140.00 / day
AIR TRACK DRILL WITHOUT OPERATOR	$ 135.00	
FRAC TANK RENTAL		$44.00 / day

CHAIN SAW	$ 35.00	$ 70.00 / day
LASER	$ 30.00	$ 72.00 / day
14" PAVEMENT FLAT SAW	$ 30.00	NA
24" PAVEMENT FLAT SAW	$ 55.00	NA

TRIPLEX PUMP		$245.00 / 10 hr. day + fuel
PORTABLE WELDING UNIT	$ 35.00	$155.00 / day
PRESSURE WASHER	$ 30.00	$145.00 / day
2" TRASH PUMP		$ 40.00 / day + fuel
3" TRASH PUMP		$ 50.00 / day + fuel
6" TRASH PUMP		$163.00 / day + fuel
PICKUP TRUCK	$ 35.00	$195.00 / day
4-WHEELER DAILY		$110.00 / day
SNOWMOBILE		$200.00 / day
GEOLOGIST ENCLOSED TRAILER	$ 40.00 / day	$1,200.00 / month
HORSE TRAILER		$70.00 / day
HORSE		$100.00 / day + fuel

MATERIALS: LESS THAN $4,000.00 = COST PLUS 15%
MORE THAN $4,000.00 = COST PLUS 12%

FUEL CONTINGENCY: *The fuel component of machinery and trucking units is 31%, the above units are based upon the average Utah Diesel fuel cost of $2.75/gallon as determine by AAA (as of 7/30/2015). This survey is found at http://fuelgaugereport.aaa.com. If average diesel fuel costs increase by more than 15% (to $3.16/gallon), Nelco reserves to right to add a fuel surcharge to each trucking or machinery unit. The Unleaded Gasoline base rate is $2.89/gallon.

Nielson Construction Standard Equipment Rates 2015

Price list for 2015, from January 2015

Work Service Desription	Unit	Price
Engineer	Hr.	$150.00
Forman & 4X4 Pickup	Hr.	$60.00
Project Manager & 4X4 Pickup	Hr.	$80.00
Grade Setter	Hr.	$45.00
GPS Survey Tech	Hr.	$50.00
GPS Survey Equipment	Hr.	$75.00
Skilled Labor	Hr.	$45.00
Certified Crane Operator	Hr.	$55.00
Labor	Hr.	$35.00
4X4 Pickup	Hr.	$25.00
4X4 Pickup & Operator Travel Time	Hr.	$50.00
1 TonTruck (Roustabout Truck)	Hr.	$35.00
2 Ton Truck (Roustabout Truck)	Hr.	$42.00
Float for 1 Ton Truck	Hr.	$25.00
Gooseneck Trailer (2hr min.)	Hr.	$22.00
Utility Trailer 16 Ft	Hr.	$10.00
Skid Steer Loader & Operator	Hr.	$76.50
580 Case 4X4 Case Extendahoe & Operator	Hr.	$75.00
John Deere Mini & Operator	Hr.	$110.00
416 Backhoe & Operator	Hr.	$75.00
420 Backhoe & Operator	Hr.	$85.00
426 Backhoe & Operator	Hr.	$85.00
430 Backhoe & Operator	Hr.	$90.00
305 Trackhoe & Operator	Hr.	$85.00
312 Trackhoe & Operator	Hr.	$100.00
315 Trackhoe & Operator	Hr.	$115.00
320 Longstick & Operator	Hr.	$150.00
320 Backhoe & Operator	Hr.	$125.00
324 Longstick & Operator (60 ft reach)	Hr.	$185.00
325 Backhoe & Operator	Hr.	$150.00
325 Backhoe w/thumb & Operator	Hr.	$150.00
330 Backhoe & Operator	Hr.	$185.00
345 Backhoe & Operator	Hr.	$235.00
Vermeer T955 Trencher	Hr.	$460.00
Robo Track Screen	Mon	$8,500.00
3 Deck Screen	Hr.	$257.50
John Henry Drill	Hr.	$310.00
844 Loader & Operator	Hr.	$195.00
930 Loader & Operator	Hr.	$98.00
950 Loader & Operator	Hr.	$120.00
966 Loader & Operator	Hr.	$152.00

NIELSON Pg 2
2015

980 Loader & Operator	Hr.	$193.00
988 Loader & Operator	Hr.	$285.00
Cat Extendable Forklift	Hr.	$90.00
D5N Dozer & Operator	Hr.	$125.00
D6 Dozer & Operator	Hr.	$135.00
D8 Dozer & Operator	Hr.	$260.00
D9 Dozer & Operator	Hr.	$325.00
D10 Dozer & Operated	Hr.	$405.00
814 Rubber Tire Dozer & Operator	Hr.	$145.00
834 Rubber Tire Dozer & Operator	Hr.	$225.00
963 Track Loader & Operator	Hr.	$130.00
Double Steer Rig up Truck & Operator	Hr.	$260.00
C-500 Rig up Truck, 50 Ton & Operator (Winch Truck)	Hr.	$225.00
35 Ton Winch Truck & Operator	Hr.	$180.00
Winch Haul Truck	Hr.	$160.00
Anchor Truck	Hr.	$150.00
Test Anchors	Per	$85.00
New Anchors	Per	$325.00
Hydrovac Truck & Operator	Hr.	$250.00
Transport & Driver (0-29 Tons)	Hr.	$145.00
Transport & Driver (30-39 Tons)	Hr.	$155.00
Transport & Driver (40-49 Tons)	Hr.	$165.00
Transport & Driver (50-59 Tons)	Hr.	$180.00
Transport & Driver (60-69 Tons)	Hr.	$185.00
Transport & Driver (70 & over Tons)	Hr.	$190.00
Permits will be charged at normal permit price		
Pilot Car	Hr.	$65.00
10 Wheel Dump Truck (12 c.y.) & Driver	Hr.	$95.00
10 Wheel Rock Dump Truck & Driver	Hr.	$105.00
Super Dump & Driver	Hr.	$110.00
Single Belly Dump (22 c.y,) & Driver	Hr.	$110.00
Double Belly Dump (28 c.y.) & Driver	Hr.	$120.00
Semi With End Dump Trailer	Hr.	$110.00
Flat Bed & Diver	Hr.	$110.00
Side Dump & Driver	Hr.	$115.00
Bucket Truck & Driver	Hr.	$105.00
Snow Plow & Operator	Hr.	$105.00
Sanding Truck & Driver	Hr.	$105.00
Snow Blower & Operator	Hr.	$175.00
769 Cat Rock Truck (35 ton) & Driver	Hr.	$195.00
740 Articulating Rock Truck	Hr.	$215.00
140 Motor Grader & Operator	Hr.	$148.00
140 Motor Grader & Operator w/GPS	Hr.	$150.00
14 Motor Grader & Operator	Hr.	$185.00
14 Motor Grader & Operator w/GPS	Hr.	$185.00
16 Motor Grader & Operator	Hr.	$260.00
16 Motor Grader & Operator w/GPS		$245.00

Nielson Pg 3
2015

160 All Wheel Drive & Operator	Hr.	$190.00
160 All Wheel Drive & Operator w/GPS	Hr.	$185.00
872 John Deere All Wheel & Operator	Hr.	$165.00
631 Scraper & Operator	Hr.	$275.00
613 Self Loading Scarper & Operator	Hr.	$135.00
623 Paddlewheel & Operator	Hr.	$235.00
627 Scraper & Operator	Hr.	$320.00
637 Scraper & Operator	Hr.	$430.00
815 Sheepsfoot Compactor & Operator	Hr.	$170.00
825 Sheepsfoot Compactor & Operator	Hr.	$240.00
Sweeper 84" self-Propelled prw broom	Hr.	$90.00
1 Ton walk Behind Compactor	Hr.	$50.00
Wacker Compactor	Hr.	$25.00
10 Ton Smooth Drum Compactor & Operator	Hr.	$115.00
Air Track Compressor & Operator (Does not include bits & steels,collars,striker bars)	Hr.	$190.00
Jackhammer	Hr.	$28.00
185 Air Compressor	Hr.	$42.00
6" Water Pump	Hr.	$30.00
4" Water Pump	Hr.	$20.00
3" Water Pump	Hr.	$19.00
2" Water Pump	Hr.	$16.00
Duo Pack Roller & Operator	Hr.	$115.00
4000 Gallon Water Truck & Driver (Water Truck)	Hr.	$100.00
5700 Gallon Water Truck & Driver (Water Tanker)	Hr.	$110.00
Stain Less Water Tanker & Driver	Hr.	$110.00
High Preasure Pump Truck	Hr.	$120.00
Water Wagon 8,000 gallon	Hr.	$165.00
Water Wagon 10,000 gallon	Hr.	$180.00
30 Ton Hydraulic Boom Truck & Operator	Hr.	$105.00
30 Ton Hydraulic Crane & Operator	Hr.	$125.00
60 Ton Hydraulic Crane & Operator	Hr.	$165.00
80 Ton Hydraulic Crane & Operator	Hr.	$185.00
Rigger & Pickup (reg. w/all cranes if cust. Can't provide a cert. rigger)	Hr.	$60.00
Man Lift & Operator	Hr.	$87.50
Welder with Truck or Shop Welder	Hr.	$80.00
Lube Truck & Operator	Hr.	$71.00
Cutting Torch	Hr.	$20.00
Steam Cleaner & Truck	Hr.	$60.00
3" to 4" Pipe Threader	Day	$60.00
2" to 4" Pipe Bevel Machine	Day	$60.00
6" to 12" Pipe Bevel Machine	Day	$71.00
Gas Monitor (Lel, 02, H2S)	Day	$66.00
4" to 20" Track Star	Hr.	$90.00
Electo Fusion Machine	Hr.	$40.00
4" to 12" Fusion Machine	Hr.	$60.00
2" to 8" Fusion Machine	Hr.	$32.00

Nielson Pg 4
2015

1" to 4" Fusion Machine	Hr.	$16.00
Sidewinder Machine incl.iron	day	$42.00
Scaffolding per section	Wee	$23.00
Generator	Hr.	$30.00
Chain Saw	Hr.	$28.00
Sand Blaster	Hr.	$28.00
Airless/Pot Paint Sprayers	Hr.	$28.00
Oxyace Line Burner Machine	Day	$28.00
Jack Hammer	Hr.	$17.00
Gas Cut Off Saw	Hr.	$17.00
Hilti Drill	Hr.	$17.00
Tractor & Posthole Digger	Hr.	$80.00
Tractor Drill	Hr.	$120.00
Tractor & Disc w/out operator	Hr.	$135.00
Trash per load	Ld.	$157.00
Fresh Water From Hydrants	BBL	$0.01
Fresh Water From Orangeville Pond	BBL	$0.10
Cat Breaker Ram	Hr.	$72.00
Machinest Field Rate	Hr.	$73.25
Machinest Shop Rate	Hr.	$62.75
Light Plant	Day	$105.00
Ditch Witch	Hr.	$100.00
Heater	Day	$80.00
Trash Basket	Day	$20.00
Flagger Travel Time	Hr.	$15.00
Traffic Control	Hr.	$65.00
Pressure Washer	Hr.	$48.00
Asphalt/Concrete Saw 14" Dia. (6" cut depth)	Hr.	$55.00

Fuel Charge: When the price of off highway diesel fuel exceeds $3.50 per gallon, or clear fuel at $3.75 per gallon, Nielson Construction reserves the right to charge for the difference in price multiplied by the AGL (average gallons per hour) multiplied by the hours of actual use. Pricing for any given week will be based on the Monday price of the Energy Information Administration listing for the Rocky Mountain Region found at http://tonto.eia.doe.gov/oog/info/gdu/dasdiesel.asp For example, if in any given week the price of fuel was $3.30 (3.30 - 3.00 = 0.30)may be used to calculate the fuel charge. ($0.30 x AGL x hours used = fuel charge).

This list contains items that we felt were likely to be needed.
We have additional items which are not part of this price list, so
please check with us if you are looking for an item that is not included on this list.

Miscellaneous Construction Material: Cost + 10%

On Call 2hrs. Minimum for Crew Pusher & Truck
Call Outs 2hrs. Minimum for Crew Pusher & Truck

Nelson Pg 5
2015

Travel Time to be paid to & from the location for the crew and transportation.

Over Time: Regular overtime will be time and a half for Labor and Forman and an additional $20.00 an hour for operators and truck drivers for over 40 Hr. a week, Saturdays, or for work work performed outside of regular working hours: 7:00 A.M. to 5:30 P.M. unless the request is given one week in advance to allow scheduling

Sundays and Holidays will be double time for Laborers and Forman, and an additional $40.00 an hour for Truck Drivers and Operators.