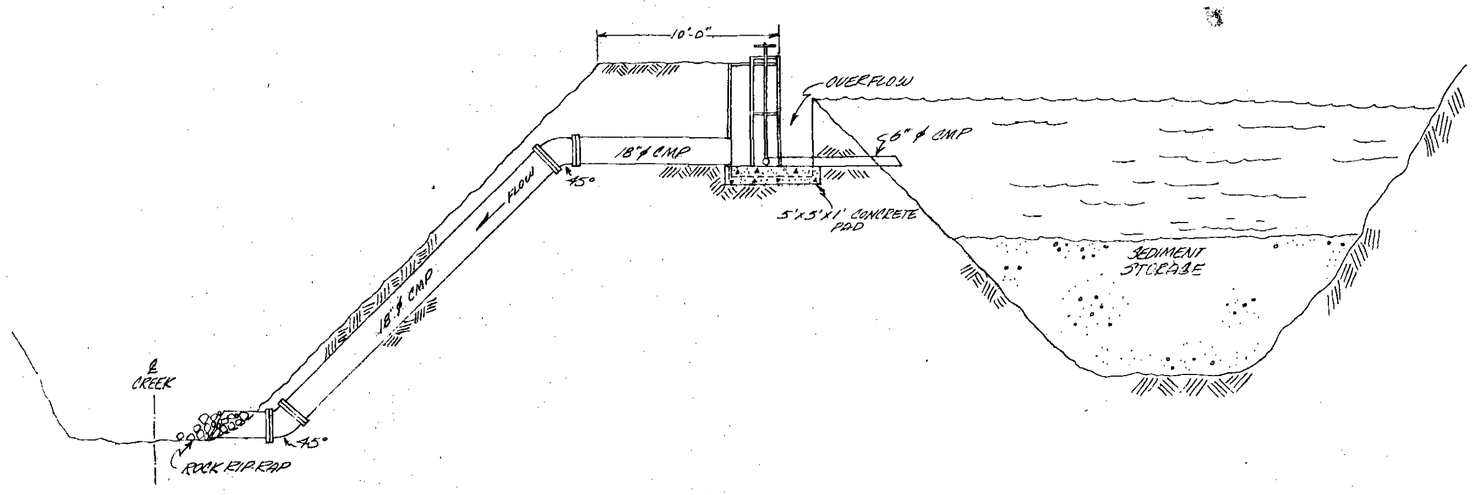

PROFILE
SPILLWAY CONTROL STRUCTURE
1" = 6'

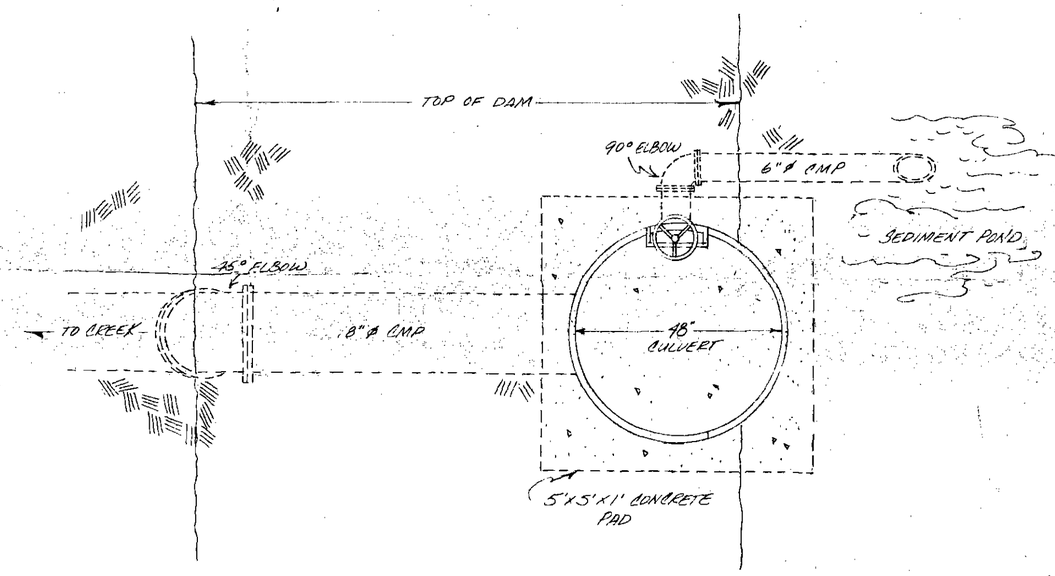

PLAN VIEW
1" = 2'

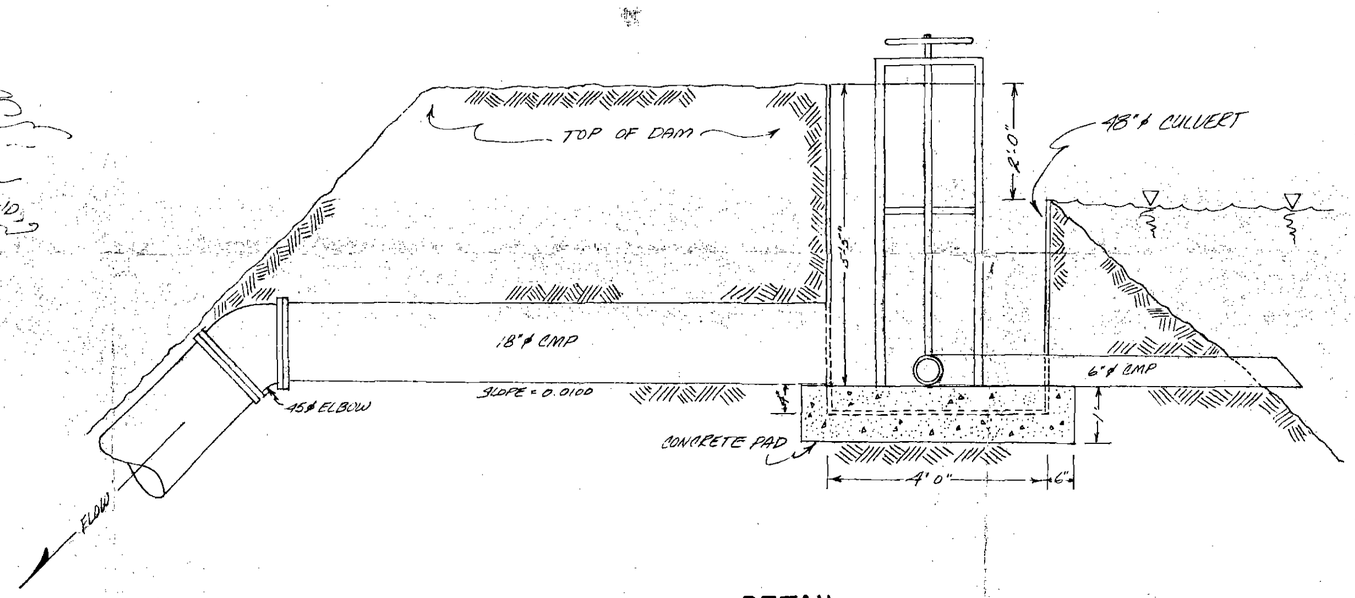

DETAIL
1" = 2'

EMERGENCY & PRINCIPAL SPILLWAY CONTROL STRUCTURE FOR EXISTING SEDIMENTATION POND

TRAIL MOUNTAIN COAL CO.
Emery County, Utah

Prepared By
Johansen & Tuttle Engineering, Inc.
Castle Dale, Utah

KAS 3/80