CE0015

UTAH POWER & LIGHT COMPANY
MINING DIVISION
TECHNICAL SERVICES REPORT

RODGER C. FRY
TOM LLOYD

CENTRAL ENGINEERING

RESULTS OF A RESISTIVITY-INDUCED POLARIZATION SURVEY
RILDA AND MILL FORK CANYONS
EAST MOUNTAIN PROPERTY

UP&L MINING PRODUCTION-ENGINEERING

JULY 1990

Utah Power & Light Company contracted Geowestern to conduct a Resistivity-Induced Polarization (I.P.) Survey in Rilda and Mill Fork canyons in the summer of 1989. The intent of the survey was to identify fractures in the strata and the depth of alluvium in Rilda Canyon by contrasting areas of Resistivity and I.P. response. This report summarizes the findings of the survey.

Resistivity-I.P. surveys have been utilized for many years to map out subsurface occurrences of groundwater or mineralization. Because groundwater within the Wasatch Plateau tends to be concentrated along fractures, Resistivity-I.P. surveys can effectively identify fractures, faults included. Where strata are present at depths that have highly contrasting resistivity or I.P. response, displacement along a fault can be detected by the offset of the depth to the contrasting beds. Where faults are present within a survey area but the strata is fairly uniform in resistivity and I.P. response, no displacement will be recognized in the data collected but the fault plane itself will most likely be easily detected. The latter scenario is normally the case within our property; therefore, the surveys will identify water-filled fractures and faults but will not always differentiate between the two. Most of the anomalies identified will be fractures, and to differentiate between faults and fractures requires additional geologic data provided by field mapping or published data.

The Resistivity-I.P. Survey was conducted on six separate lines, five in Rilda Canyon and one in Mill Fork Canyon (see attached map). Three of the lines were along roads in the canyon bottoms in both Rilda and Mill Fork canyons (longitudinal). Three lines were transverse, across Rilda Canyon, and were designed to identify the depth of alluvial fill in the canyon bottom.

The resistivity survey used the pole-dipole configuration with station intervals of fifty (50) feet on the longitudinal lines and twenty (20) feet on the transverse lines (see Figure 1). Resistivity and I.P. values were measured at separation intervals of 100, 200, 300, and 400 feet on each of the longitudinal lines and 20, 40, 60, and 80 feet on the transverse lines. These separations in data collection allowed the recovery of data that revealed conditions up to 400 feet in depth on both the longitudinal and transverse lines. The I.P. survey used the time-domain method and reflects areas where the ground has a greater electrical capacitance, a condition normally caused by disseminated sulfides which, on our property, would most likely be minor amounts of pyrite along fractures.

Rapid changes in the resistivity or I.P. response of the surveys are almost always associated with fractures in a geologic setting such as we have and can follow a distinct trend at depth which allows the determination of the angle of dip of the fracture. The Resistivity-I.P. Survey identified several anomalies indicating fracture and/or faults. The fractures which cause the anomalies are dipping steeply in a westerly direction or are vertical. The degree of dip associated with each fracture is shown on Map 1. Attached are pseudo-profiles that show changes in resistivity-I.P. response. Each of the anomalous areas representing fractures was examined in the field and on aerial photographs to determine the significance of the anomalies. The geophysical data was then compared with geologic data collected in the field and from publicly available reports, making it possible to locate a fault graben (Mill Canyon Graben) system trending in a northeast direction which cuts across the western portion of our northern reserves (see Map 1). The southernmost fault of the graben was intersected in ARCO's Beaver Creek #4 Mine in Mill Fork Canyon and has a displacement of about twenty (20) feet down on the

northwest side. Where the fault crosses the northern end of East Mountain it has been mapped to have a displacement of thirty (30) feet down on the northwest side. All other faults in the graben system have a relative displacement which is up on the northwest side. Several major springs are located along the graben's trend (Little Bear Springs and Big Bear Springs), indicating that it is acting as an aquifer and should be considered wet if and when intersected by mining.

Several anomalies to the southeast of the Mill Canyon Graben were identified by the Resistivity-I.P. Survey. No displacement is identified on any of them. The anomalies are on the same geologic trend as areas mined in the ARCO Beaver Creek #4 Mine where no faults existed; therefore, in all probability they are water saturated fractures having no vertical displacement.

The transverse lines (R-3, R-4, and R-5) were designed to provide data regarding the depth of the alluvium in the canyon bottom. The alluvial/bedrock contact is identifiable on the profiles and provides important information on the hydrology of the springs located in the canyon. The alluvial floor is up to seventy (70) feet thick as indicated by the resistivity profiles (R-3 through R-5).

The Resistivity-I.P. Survey along with field mapping and other geologic data enabled the identification of a fault graben system, the Mill Canyon Graben, which cuts through the northwestern portion of our East Mountain property. The graben consists of one normal fault having its relative displacement down on the northwest and up to four other faults, each with its relative displacement down on the southeast side. Numerous resistivity anomalies were identified to the southeast of the Mill Canyon Graben but, because of their locations in respect to mined areas in the Beaver Creek #4 Mine,

they do not appear to have displacement associated with them. The resistivity data also allowed the identification of the depth to bedrock in Rilda Canyon. This information is important in understanding the hydrology of the springs present there.

FIGURE 1
POLE–DIPOLE RESISTIVITY CONFIGURATION

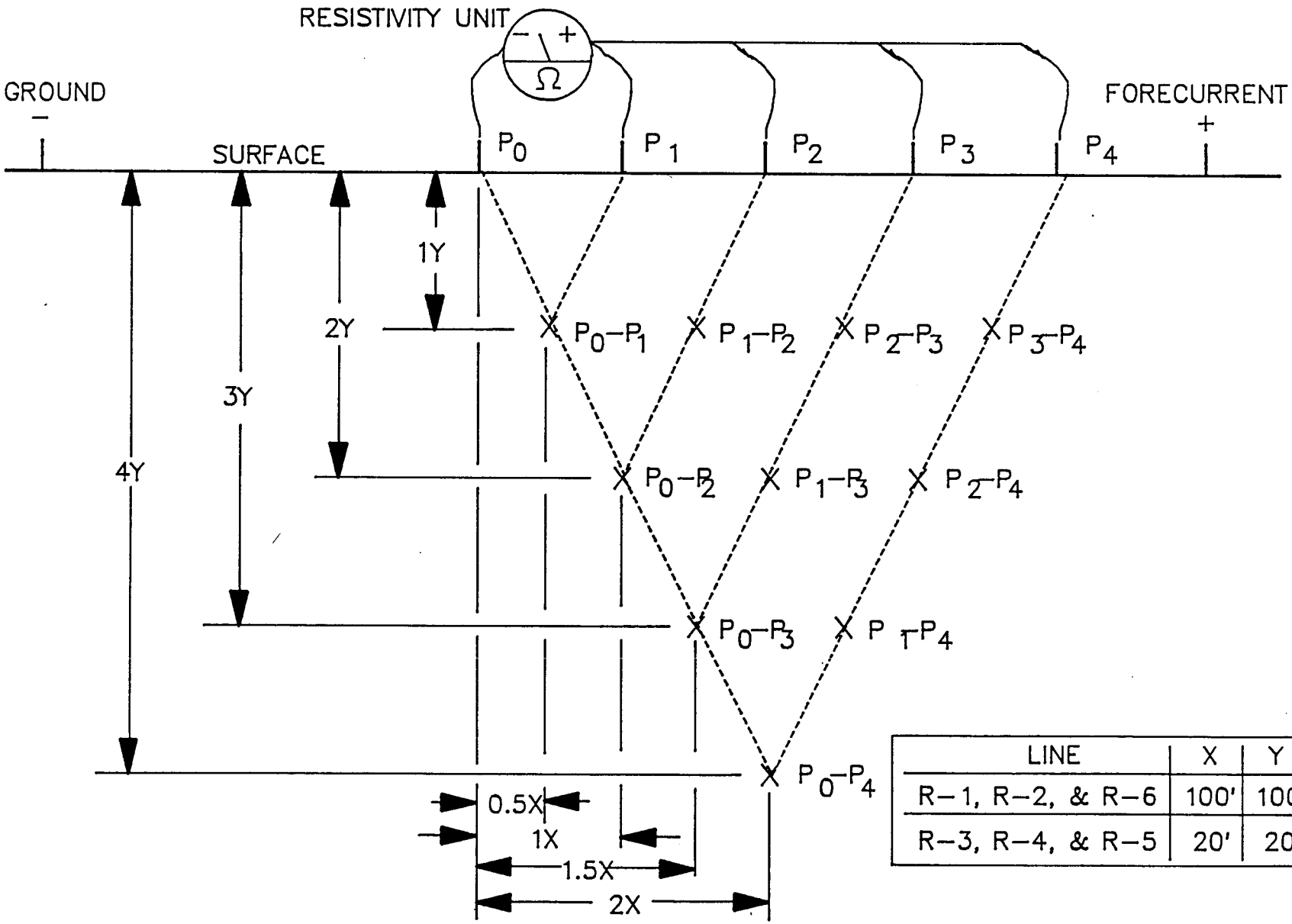

LINE	X	Y
R–1, R–2, & R–6	100'	100'
R–3, R–4, & R–5	20'	20'

RESISTIVITY SURVEY
RILDA CANYON PROJECT
Emery County, Utah

Geo-Western
Salt Lake City, Utah
by
Van G. Hewitt
1989

RILDA CANYON PROJECT

Emery County, Utah

INDEX

INTRODUCTION 1
SCOPE OF SURVEY 2
RESISTIVITY METHOD 2
INDUCED POLARIZATION METHOD 3
ELECTRODE ARRAY 3
INSTRUMENTATION 3
CULTURAL EFFECTS 4
DATA PRESENTATION 4
NORMAL RESISTIVITY VALUES 5
BACKGROUND IP RESPONSE 5
TOPOGRAPHIC EFFECTS 5
DIP ANGLE CORRECTIONS 6
INFERRED FRACTURE ZONES 6-8
SHALLOW RESISTIVITY 9
SUMMARY 9-10

INTRODUCTION

During late July and early August of 1989 resistivity tests were completed in the Rilda Canyon area spproximately ten miles West of Hungington in Emery County, Utah.

A total of thirty nine thousant linear feet of resistivity profiling was completed and included six traverse lines labeled R-1 though R-6. Line R-1 proceeded Westerly from Hungington Canyon up Rilda Canyon for a distance of 19,000 feet. Line R-2 was extended Southwesterly from Rilda Canyon up the Left Fork of Rilda Canyon for a distance of 6,500 feet.

Lines R-3, R-4 and R-5 were laid out perpenducular to Rilda Canyon for a short distance on either side. Line R-3 was extended 500 feet North and 500 feet South of the Canyon bottom. Line R-4 began 500 feet North of the Canyon bottom and was extended for a distance of 1000 feet South of the canyon bottom along a North-South Draw. Line R-5 was extended from 500 feet North of Rilda Canyon to 500 feet South.

Line R-6 was extended Westerly along Miller Fork which roughly parallels Rilda Canyon 6,000 feet to the North. The profile begins at Hungington Canyon and runs long the canyon floor for a distnce of 10,000 feet

Topography in the Rilda Canyon area is rather severe however since all lines were completed along the canyon bottoms normal slope angles generally were less than six degrees. The exception to this was at the west end of line R-1 where the profile left the canyon floor and proceeded along the hillside. Here slope angles were sometimes in excess of 8 degrees. For a short distance on the West end of line R-2 slope angles exceeded 20 degrees.

Saline water within a fracture zone will result in a substantial reduction in resistivity. Where fresh water is present a contrasting resistivity high will be noted. If data are taken at increasing depths and contoured in pseudo section form a fracture zone may be readily determined along with a its dip angle.

INDUCED POLARIZATION METHOD

The IP technique provides a significant response from any metallinc sulfides which may be present within a fracture zone and is used to compliment resistivity data. All rocks give rise to (background IP) responses and values in excess of 2 to 3 times background are considered significant. Weak IP responses are also observed where fresh water is present within a formation or fault system and may be confused with weak sulfide responses.

ELECTRODE ARRAY

The pole-dipole electrode system was used for the survey with an a current sink located at infinity. Two potential electrodes and one current elecstrode were placed in tandem along the profile. Resistivity and IP values were taken at electrode separations of 100, 200, 300, and 4Q0 feet. Horizontal data stations were placed at 50 foot intervals. On lines R-3, R-4 and R-5 stations were taken at 20, 40, 60, and 80 foot spacings along with the normal suite to provide more shallow detail for determining alluvial thickness.

INSTRUMENTATION

Resistivity and IP equipment of Geo-Western manufacture was employed on the survey. Resistivity and IP responses were

SCOPE OF SURVEY

The purpose of the field work was to locate any fault or fracture zones which may have bearing on coal mine development within the survey area. The survey was considered to be of a reconnaissance nature since profiles were too widely spaced to inferre linear projection of the fracture zones.

Lines R-3, R-4 and R-5 placed at right angles were used to access alluvial thickness along Rilda Canyon as well as to determine the presence of significant ground water within the alluvium.

RESISTIVITY METHOD

The resistivity method employes a series of electrodes spaced in a linear fashion along a horizontal traverse line. Direct current is applied to steel current electrods while potential measurements are taken of the impressed surface voltages. Thus a measurement of the relative conductivity of the sub-surface is taken at predetermined points along the traverse line.

High resistivity values generally reflect formations which are poor ionic conductors while low values indicate more porous rocks with higher, generally more saline water content.

Clays, siltstones and shales normally exhibit resistivity lows while rocks such a limestone, sandstone, and igneous formations are much higher

recorded in the time domain using a transmitter current pulse of 1 second. A 300 ms transient delay interval was used followed by an IP integration period of 600 ms. Resistivity values were calculated in ohm feet while IP responses were read in Mv sec/volt.

CULTURAL EFFECTS

Man made features such as power lines, buried pipe lines or grounded fences sometimes create anomalous surficial responses which may be evident on all electrode separations and must be considered when interpreting resistivity and IP data. A plastic water line in Rilda canyon was expected to have no adverse effect on the data. In Rilda Canyon at approximately 90 West a small grounded fence eclosure roughly 200 by 200 feet was noted. Data at 90 West on line R-1 as well as the interval from 9 to 11 North on the North-South line R-4 may have been effected to some degree.

In Miller Fork line R-6 passes beneath a power transmission line at 6 West. The line cuts the power line at a very shallow angle producing moderate IP responses for a distance of 500 feet from 5 to 10 West.

DATA PRESENTATION

IP and resistivity responses were plotted in pseudo section form and contoured to approximate a vertical cross section of formation responses. Features interpreted as fault or fracture zones are inserted along with slope corrected dip angles. Additionally a plan overlay was prepared showing fault or fracture intersects including direction of dip and inferred dip angle.

NORMAL RESISTIVITY VALUES

Resistivity values within the survey limits ranged from 100 to 500 ohm feet over most areas. As a general rule resistivity values increase as the survey proceeds Westward. This probably reflects the ever increasing presence of sandstone as the data evevation increases. This is particulatly true of the West end of line R-1 where the traverse climbs atop a substantial ledge forming sandstone layer. At the East end of lines R-1 and R-6 near their junction with Huntington canyon values are generally less than 100 ohm feet particularly on the deeper spacings apparently reflecting a substantial siltstone and shale assemblage.

BACKGROUND IP RESPONSES

Normal IP responses are in the neighborhood of 5 to 6 mv sec/volt. Anomalous responses encountered at inferred fracture locations were sometimes as high as 20 mv sec/volt. Abnormally high values generally are thought to indicate the presence of metallic sulfides within the fracture zone. Valus on the order of 7 to 10 mv sec/volt may merely suggest the presence of ground water within a fracture.

TOPOGRAPHIC EFFECTS

Hills and valleys with steep slopes in excess of 10 to 15 degrees may be expected to produce anomalous resistivity effects. Hilltops produce abnormally high values while valleys produce values lower than normal. For this reason resistivity anomalies under these conditions usually are considered suspect unless accompanied by IP responses which normally are not effected by topography.

DIP ANGLE SLOPE CORRECTIONS

Because slope angles tend to distort the inferred fault location, particularly at depth a dip angle correction equal to the actual slope measurement must be applied.

INFERRED FRACTURE ZONES

Due to the large number of significant features interpreted as fault or fracture zones they are noted and cataloged as follows.

LINE	LOCATION	RES.	IP	SLOPE CORRECTION	CORRECTED	COMMENT
R-1	7.8 W	high	6	-2	-90 W	weak
	13.7 W	high	5	-3	-89 W	weak
	22.0 W	low	9	-4	-85 W	weak
	31.2 W	high	5	-5	-85 W	weak
	44.3 W	low	5	-5	-90 W	major
	54.0 W	low	8	-4	-89 W	moderate
	64.4 W	low	10	-4	-89 W	weak
	72.9 W	low	10	-4	-85 W	weak
	79.7 W	low	8	-4	-90 W	moderate
	84.8 W	low	7	-4	-90 W	weak
	90.7 W	low	12	-4	-89 W	major

	95.9 W	low	9	-4	-89 W	weak
	105.6 W	low	18	-4	-85 W	weak
	109.5 W	low	11	-4	-84 W	weak
	119.8 W	low	15	-4	-87 W	moderate
	128.1 W	low	18	-5	-86 W	major
	133.2 W	low	11	-5	-87 W	moderate
	141.4 W	high	10	-5	-90 W	weak
	148.4 W	low	?	-7	-80 W	weak
	154.8 W	low	8	-7	-82 W	weak
	165.0 W	low	8	-7	-89 W	weak
	168.4 W	low	6	-7	-85 W	weak
	187.1 W	low	9	-8	-90 W	weak
LINE						
R-2	10.7 W	low	8	-7	-86 W	weak
	15.0 W	high	7	-6	-83 W	moderate
	21.7 W	low	8	-8	-82 W	weak
	25.5 W	low	15	-18	-80 W	moderate
	29.2 W	low	23	-20	-88 W	moderate

	33.0 W	low	7	-20	-86 W	moderate
	37.5 W	low	6	-20	-85 W	weak
	49.3 W	low	6	-4	-82 W	weak
LINE						
R-3	10.1 N	low	8	-13	-83 S	major
LINE						
R-4	1.5 N	low	13	?	-90 S	major
	11.1 N	Low	10	?	-83 S	major
		(possible fence influence)				
LINE						
R-5	9.5 N	low	8	-14	-85 S	major
LINE						
R-6	25.5 W	low	8	+5	-85 W	Weak
	42.3 W	low	8	-6	-88 W	moderate
	43.8 W	low	?	-6	-88 W	moderate
	49.3 W	low	10	-6	-88 E	moderate

SHALLOW RESISTIVITY

Lines R-3, R-4, and R-5 were placed at right angles to the Rilda Canyon drainage in order to determine depth to bedrock and possible ground water accumulations.

Line R-3 Depth to bedrock at the creek (10 N) appears to be approximately 60 to 65 feet. A fresh water zone is indicated from roughly 9.5 North to 10.5 North extending from near surface to bedrock.

Line R-4 Depth to bedrock at 11 North is approximately 65 to 70 feet with a fresh water zone extending from the creek North to about 11 North. A second fresh water zone is indicated between 6.5 North and 9.0 North with the deepest bedrock inferred to be approximately 65 feet at 7.0 North.

Line R-5 Depth to bedrock at the deepest point at 10 North is estimated at 55 to 60 feet. A water zone is indicated from 9.0 North to 10.5 North beginning at about 30 feet and extending to bedrock.

Since a major structural feature is inferred along Rilda Canyon depth to bedrock estimates may be somewhat distroted due the underlying resistivity feature.

SUMMARY

A large number of fractures are inferred from the plotted pseudo sections. Those thought to be of most significance are those noted as major or moderate features. On line 1

three major features were detected along with 4 moderate zones. Line R-2 detected 4 moderate zones and three moderate features were noted on line R-6. With the exception of the Major structural feature implied along Rilda Canyon by lines R-3, R-4 and R-5 and those detected on line R-1 no other anomalies considered of major significance were found. Since line R-6 generally parallels R-1 any major Northerly structural features should have been detected with equal intensity on both profiles. It therefore may be concluded that to some degree intensity of resistivity and IP anomalies interpreted as structural features on line R-1 could be inhanced by the addition of ground water and or sulfide deposition along the inferred Rilda Canyon fracture.