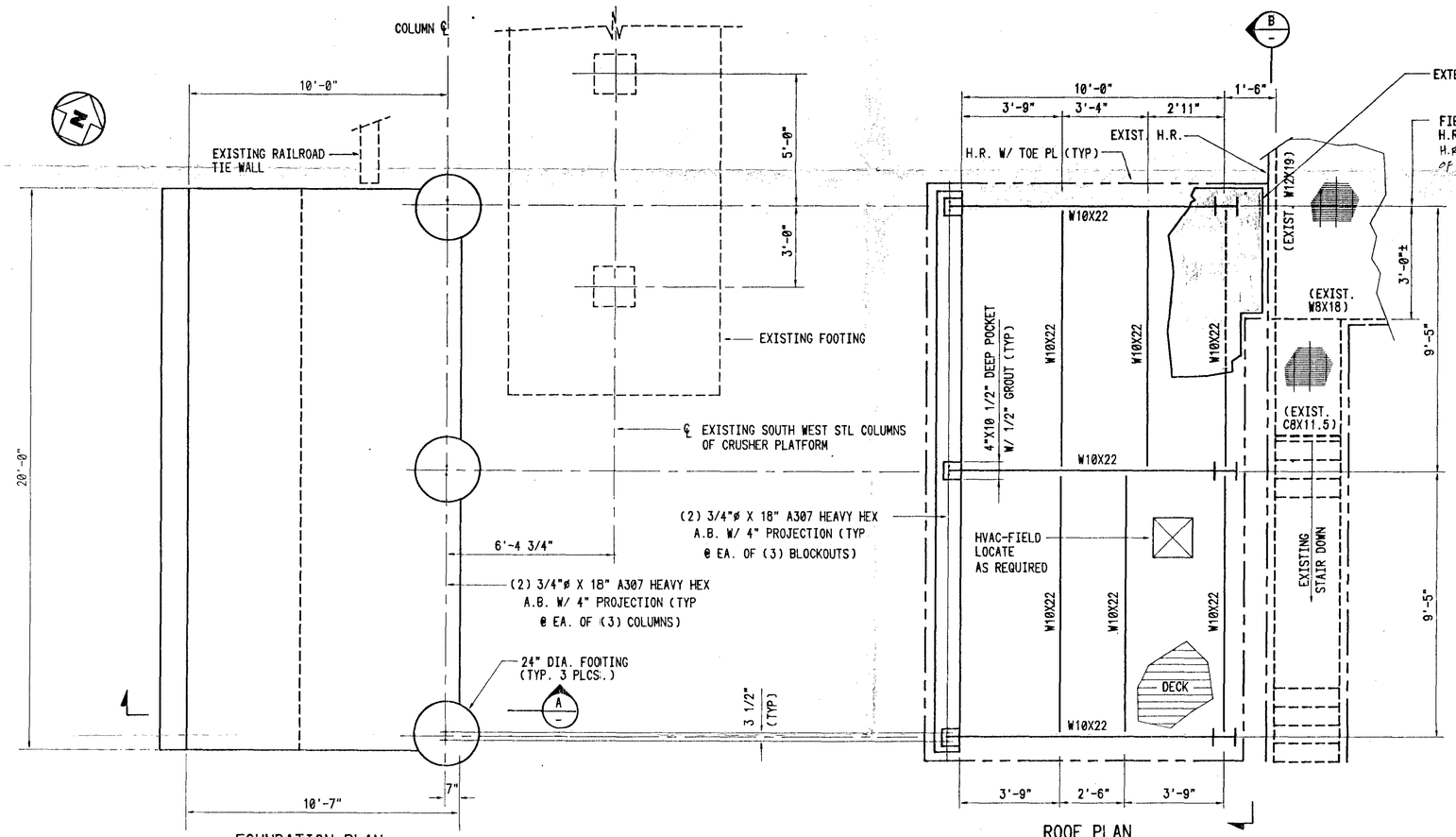

FOUNDATION PLAN

ROOF PLAN
(T/STL. VARIES)

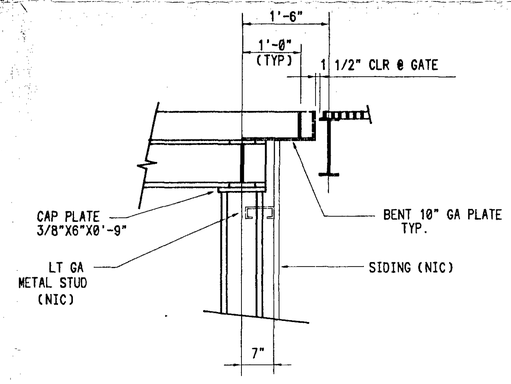

DETAIL #1

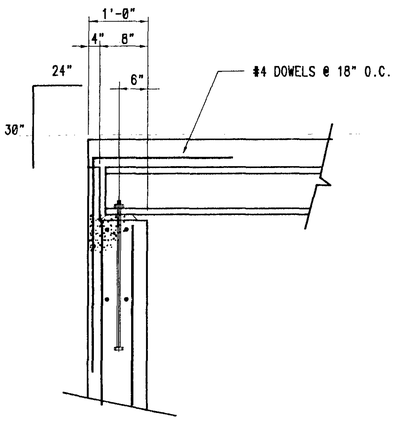

DETAIL #2

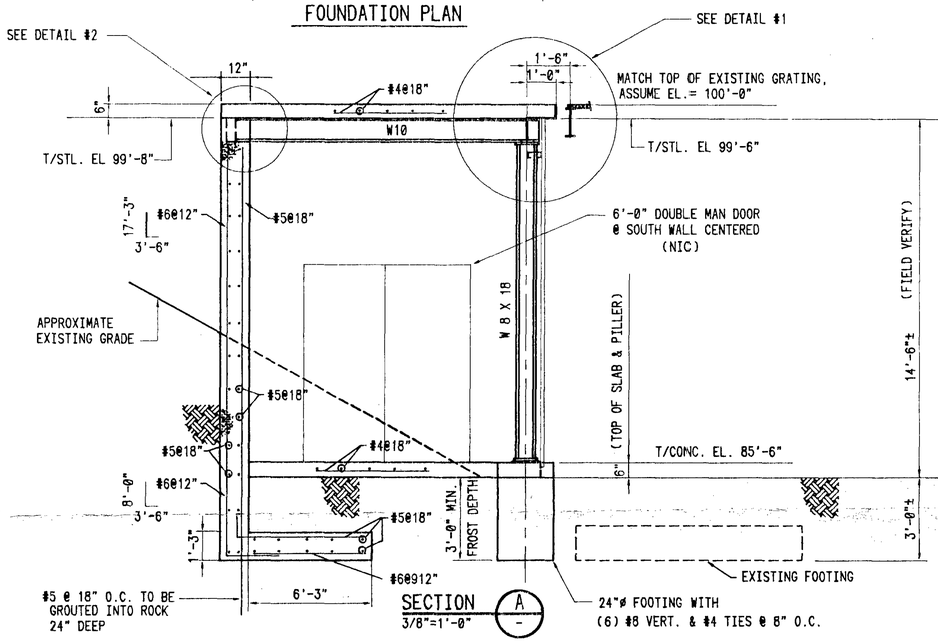

SECTION A
3/8"=1'-0"

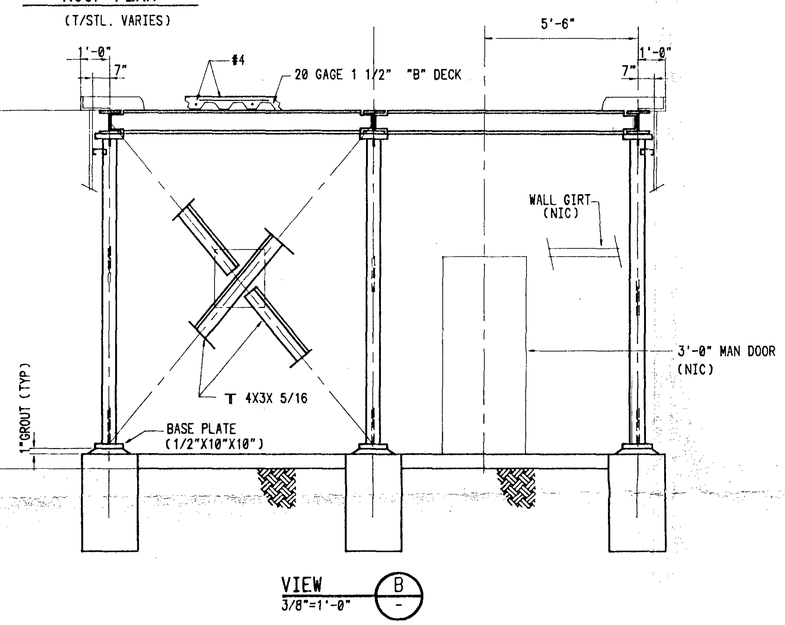

VIEW B
3/8"=1'-0"

NOTES:

1. FOR GENERAL STRUCTURAL NOTES SEE DWG. S1
2. FIELD VERIFY ALL ELEVATIONS

RECEIVED MAR 1 4 1994

APPROVED BY	
TITLE	DATE
APPROVED BY	
TITLE	DATE
APPROVED BY	
TITLE	DATE

NO.	DATE	REVISIONS	BY

PALMER ENGINEERING & DEVELOPMENT
Consulting Engineers
(801) 561-2812 • Fax (801) 561-2813
140 West 9000 South, Suite 4 • Sandy, Utah 84070
A Professional Corporation

TIPPLE ELECTRICAL FACILITY - AREA 7A

TRAIL MOUNTAIN MINE
SURFACE FACILITY CONSTRUCTION
ENERGY WEST MINING COMPANY

DRAWN	GR
CHECKED	BS
DATE	2-22-94
SCALE	3/8"=1'-0"
JOB NO.	4119
SHEET	L-3
OF	SHEETS

FEB 22 1994 2/22/94 1:32