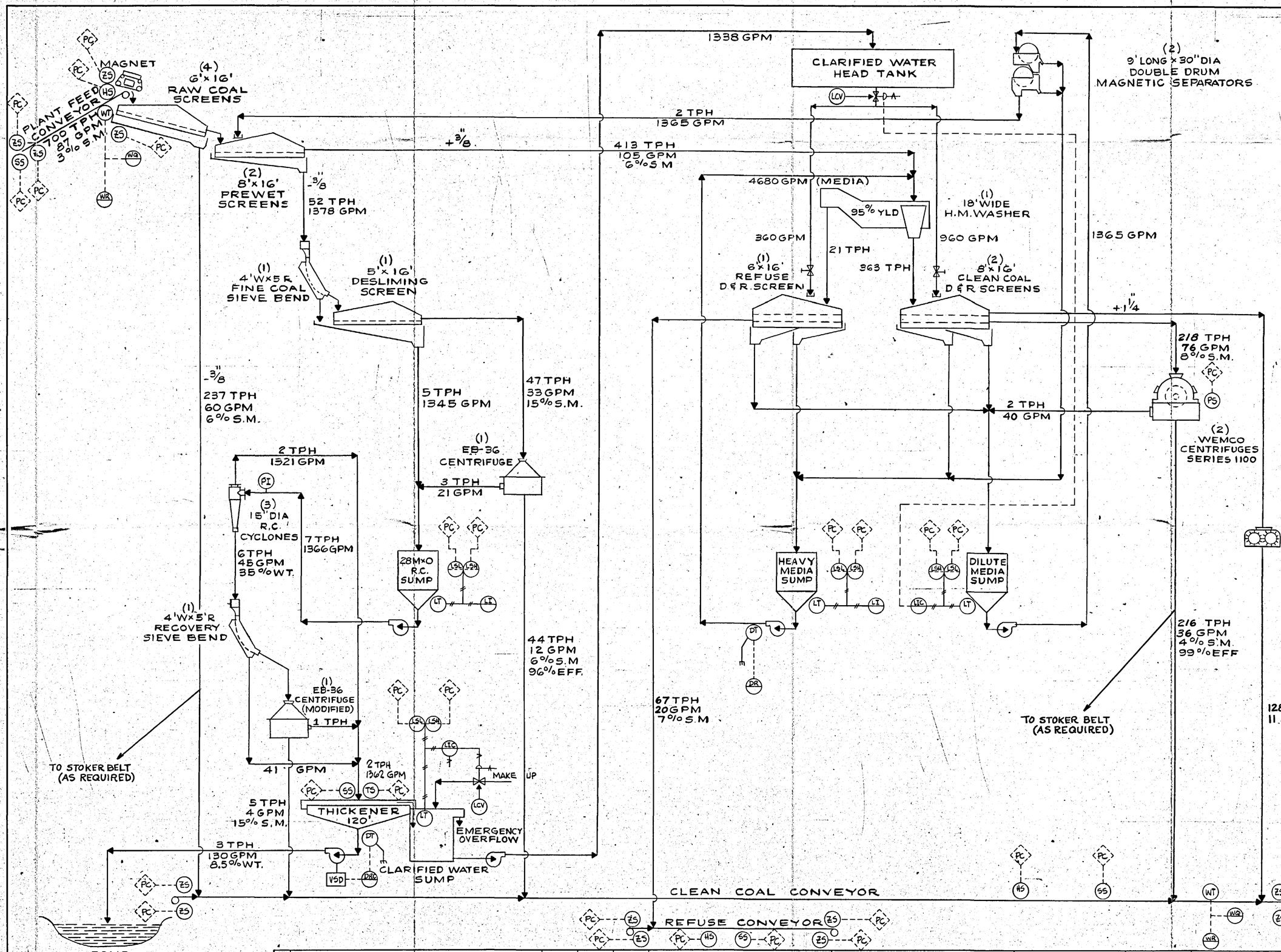

SIZE ANALYSIS		
SIZE	WT. %	CUM. WT. %
+1"	29	29
1"x1/2"	21	50
1/2"x3/8"	9	59
3/8"x3/16"	5	64
3/16"x28M	31	95
28Mx100M	3	98
100Mx0	2	100

MATERIAL BALANCE		
SIZE	C.C.	REFUSE
+3/8"	344	67
3/8"x28M	281	–
28Mx0	5	3
TOTAL	630	70
YIELD	90.0%	
GPM	123	150
MOISTURE	4.7%	

WATER BALANCE	
FEED WATER	87
PRODUCT WATER	123
REFUSE WATER	150
MAKE UP WATER	186
SPRAY WATER	1320
THICKENER CLAR H_2O	1338

I, Kent A. Seaton, registered engineer, certify that these plans are true and correct to the best of my knowledge.

Signature [signature] Date 8/28/81

KENT A. SEATON REGISTERED 16806 PROFESSIONAL ENGINEER STATE OF COLORADO

PLATE 15-2

REV.	REVISION DESCRIPTION	MADE BY	CHECKED BY	DATE
4				
3	CHANGED WATER & MAT'L BALANCE & ADD STOKER BELT	C.R.M.		AUG 26, 81
2	CHANGED WATER & MAT'L BALANCE	W.J.H		JUNE 4, 81
1	ADDED PROCESS & INSTRUMENT SYMBOLS	DNG		APR 30 '81

THIS DRAWING IS THE PROPERTY OF CONSOLIDATION COAL COMPANY AND MUST NOT BE USED EXCEPT IN CONNECTION WITH OUR WORK ALL RIGHTS OF DESIGN OR INVENTION RESERVED

CONSOLIDATION COAL COMPANY
PITTSBURGH PA.
OFFICE CENTRAL ENGINEERING

DRAWN BY D.C. LANGSDORF DATE 4-1-81
DESIGNED BY W.L.S./M.P.E DATE 3-31-81
CHECKED BY DATE
APPROVED BY C.R. [signature] DATE 8-28-81

WESTERN REGION
WESTERN OPERATIONS
EMERY PREPARATION PLANT
700 TPH FLOW CONCEPT #1

NO. DWGS. THIS PROJECT
SCALE NO SCALE
PROJECT NO. 0130400
DRAWING NO. 8108-FS-1
FILE NO.