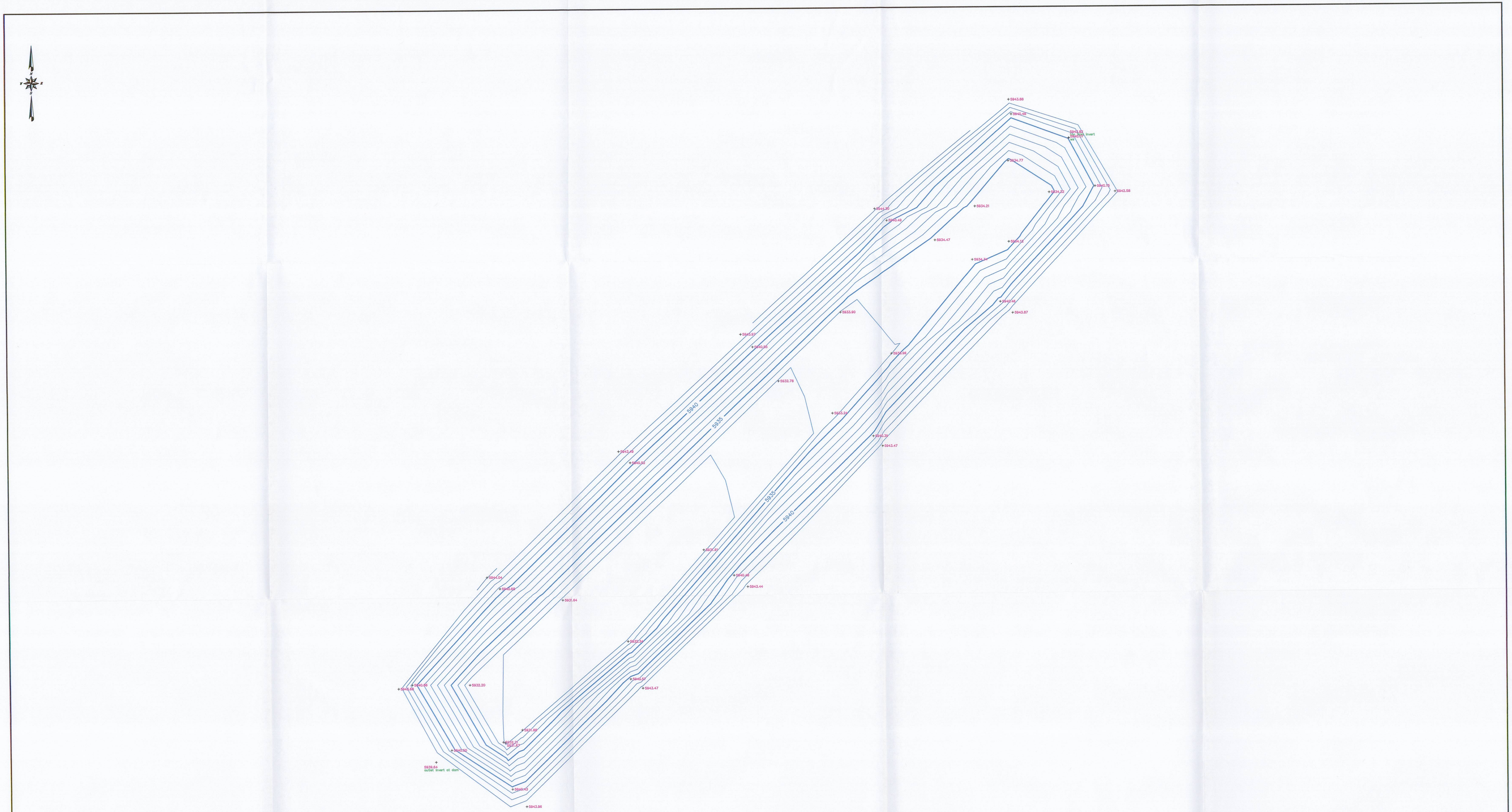

File in:
☐ Confidential
☒ Shelf 2010 Annual Report
☐ Expandable
Date Folder 04/12/2011 C/0150015
Confidential
For additional information

RECEIVED
APR 12 2011
DIV. OF OIL, GAS & MINING

REGISTERED PROFESSIONAL ENGINEER
No. 168246
RICHARD B. WHITE
16 M 2010
NOT VALID WITHOUT A SEAL
STATE OF UTAH

EarthFax

SURVEY:
SURVEY CONDUCTED AUGUST 19, 2010

COORDINATE SYSTEM:
NAD 27 DATABASE

EXTERNAL REFERENCE:

REVISIONS

NO.	DATE	BY	DESCRIPTION	NO.	DATE	BY	DESCRIPTION
1							

0' 40'
SCALE: 1" = 40'

DRAWN BY: SWF
APPROVED BY: JG
CHECKED BY: RBW
ORIGINAL DATE: 09/2010
RE-DRAWN DATE:
DWG DATA: G:\UC982\21-PONDS 1,6 SURVEYS PONDS-SURVEY.DWG

EMERY MINE
EMERY COUNTY, UTAH
PERMIT NO.
ACT015/015

CONSOLIDATION COAL COMPANY
P.O. BOX 566
SESSER, IL 62884-0566

EMERY MINE
POND 1 BOTTOM SURVEY