MONSEN ENGINEERING CO. 83541

RECEIVED
DEC 21 1984
DIVISION OF
OIL, GAS & MINING

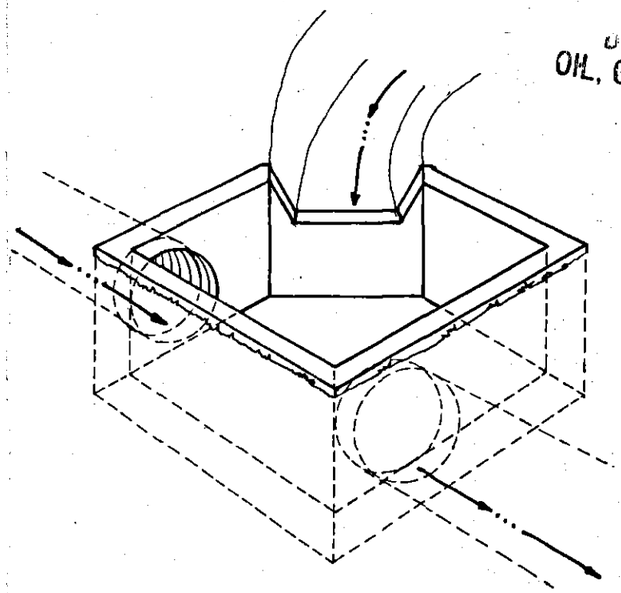

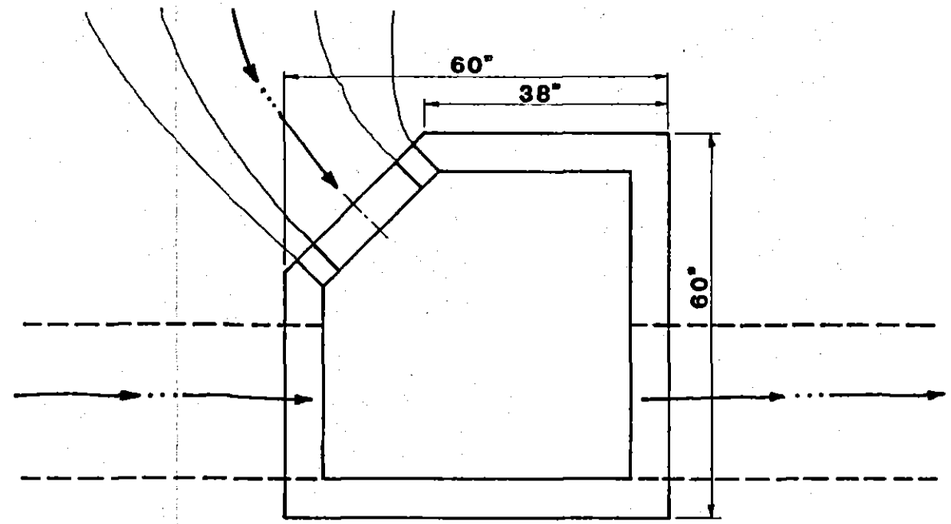

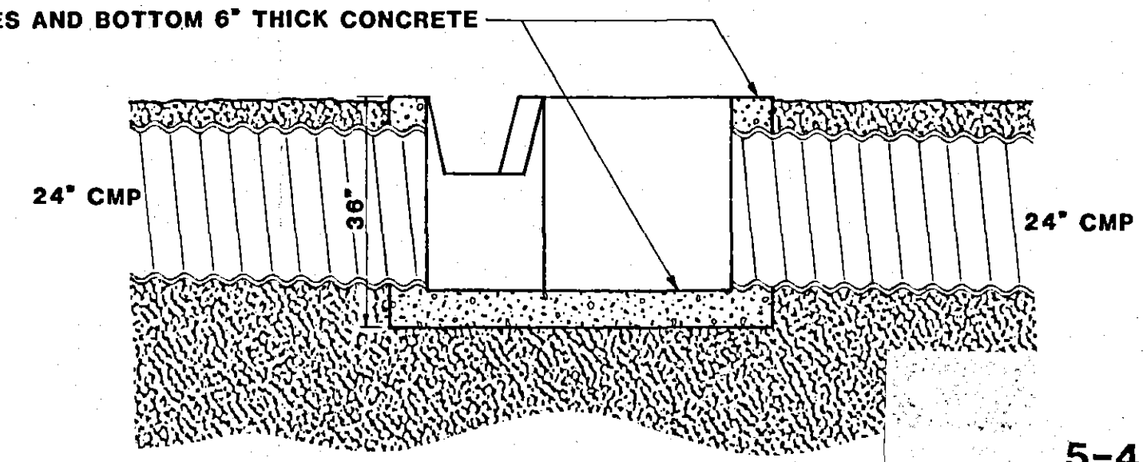

5-4

Addition 12/20/84

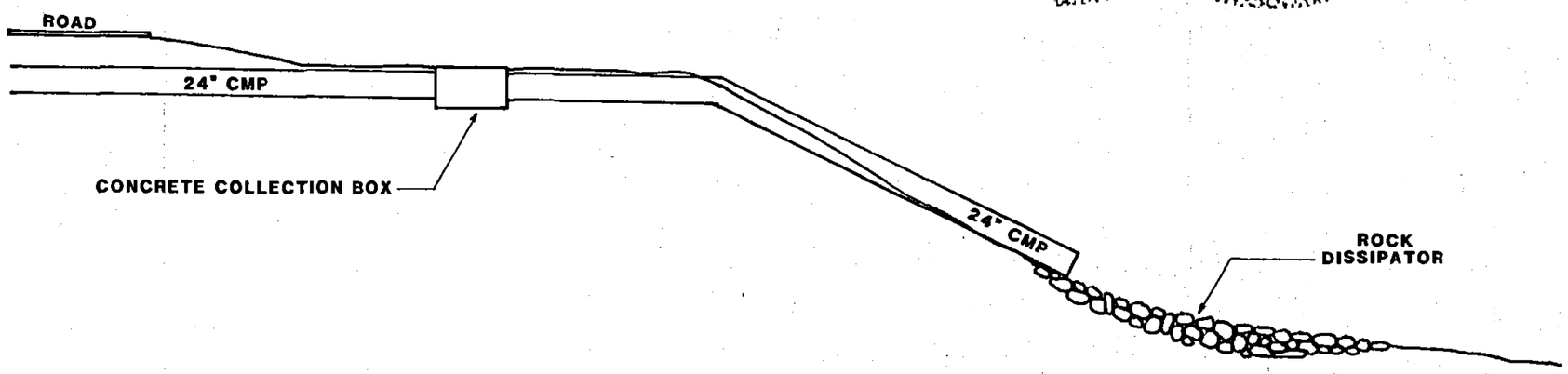

DES BEE DOVE COAL MINE EMERY COUNTY, UTAH		
CONCRETE COLLECTION BOX DETAIL JUNCTION ROAD STA. 131+00		
UTAH POWER & LIGHT COMPANY DEPARTMENT OF MINING & EXPLORATION		
DRAWN BY: A.W.BROW	CHECKED BY: [illegible]	DATE: 18 DEC 1984
Scale	Sheet No.	Drawing Number
NONE	1	CM-10608-DS