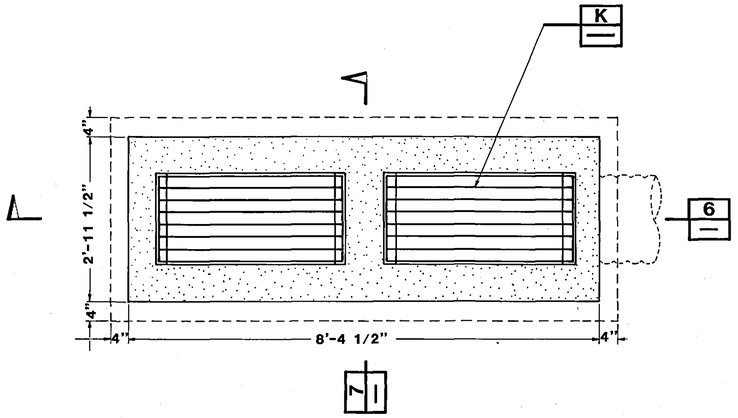

PLAN VIEW

DOUBLE CATCH BASIN DETAIL F/2

3/4" = 1'-0"

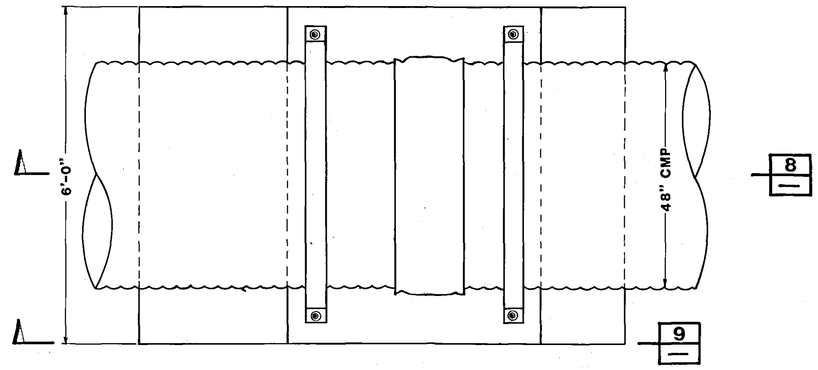

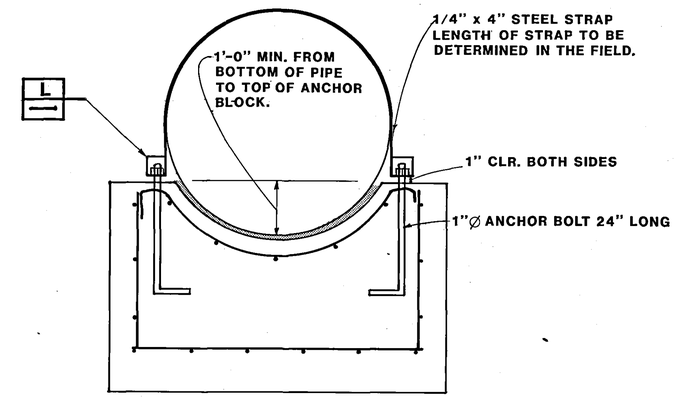

SECTION 10

3/4"=1'-0"

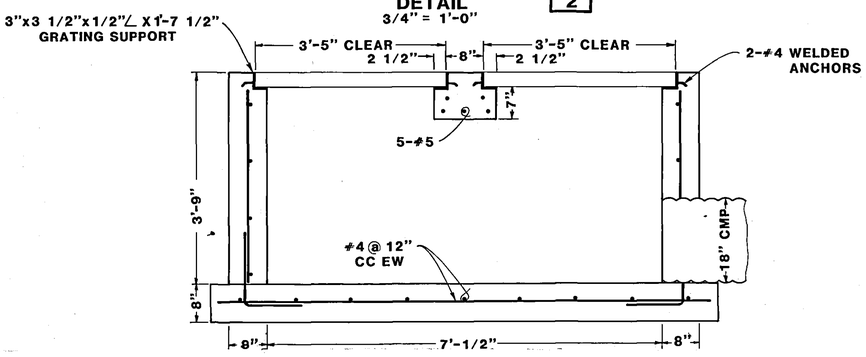

SECTION 6

3/4" = 1'-0"

SLOPE VIEW ANCHOR BLOCK DETAIL D/3

3/4" = 1'-0"

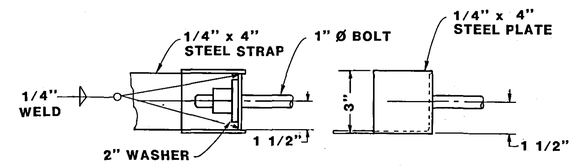

DETAIL L

NTS

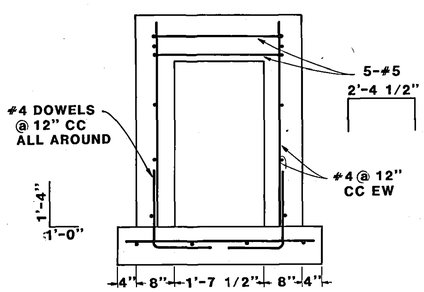

SECTION 7

3/4" = 1'-0"

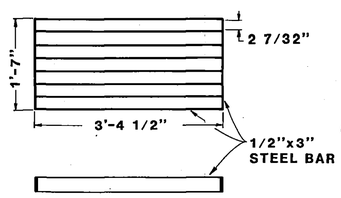

GRATE DETAIL K

3/4" = 1'-0"

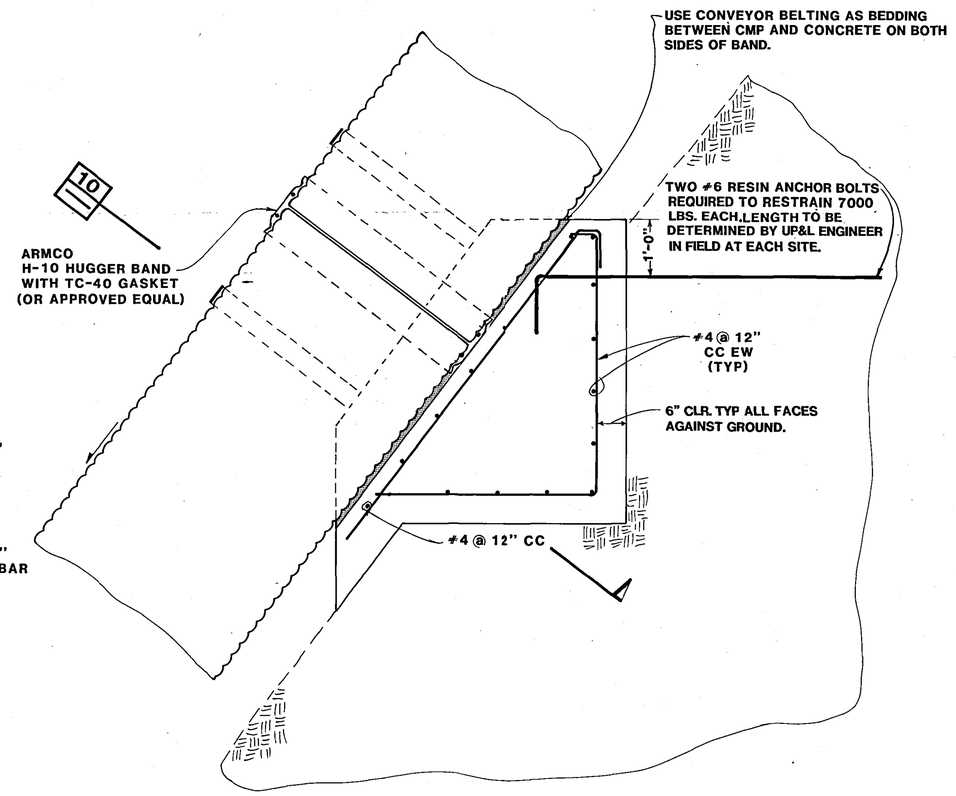

SECTION 8

3/4" = 1'-0"

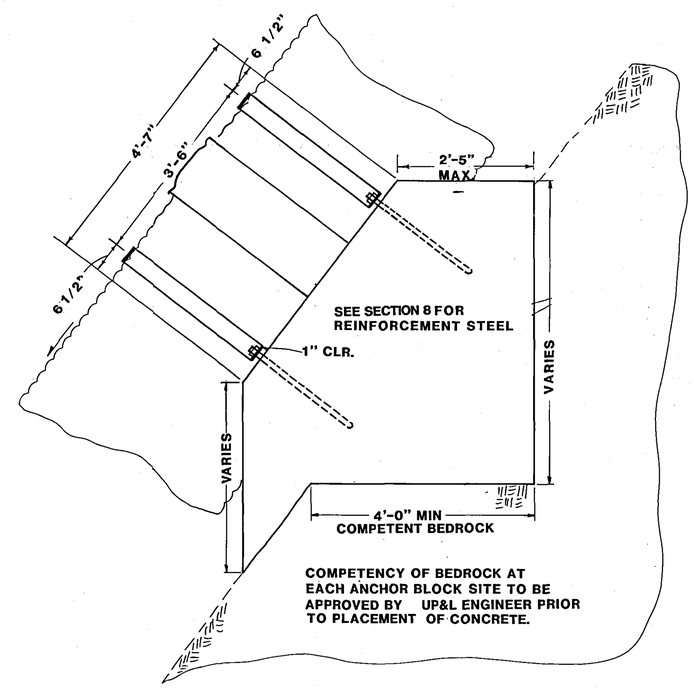

SECTION 9

3/4" = 1'-0"

3-11

NO.	DATE	REVISION	BY	APVD.	DATE
3					
2					
1					

DESIGNED GJP DLW
DRAFTED DRB
CHECKED MEA

June 6, 1986
PROJECT ENGINEER — LICENSE NO.

SCALE AS SHOWN

VAUGHN HANSEN ASSOCIATES, INC.
CONSULTANTS / ENGINEERS
SALT LAKE CITY, UTAH

UTAH POWER AND LIGHT COMPANY
DES-BEE-DOVE MINE
ANCHOR BLOCK & DOUBLE CATCH BASIN DETAILS

SHEET NO. 6 OF 7

5-1-1