I CERTIFY THAT I AM A REGISTERED PROFESSIONAL ENGINEER IN THE STATE OF UTAH AND DO ALSO CERTIFY THAT THIS DRAWING/PLAN IS ACCURATE AS DEPICTED AND STRUCTURES ASSOCIATED WITH THIS PLAN ARE DESIGNED ACCORDING TO PRUDENT ENGINEERING PRACTICES TO THE BEST OF MY KNOWLEDGE AND BELIEF.

J. Blake Webster 11/5/81
J. BLAKE WEBSTER No. 7728 DATE

REGISTERED PROFESSIONAL ENGINEER J. BLAKE WEBSTER No. 7728 STATE OF UTAH

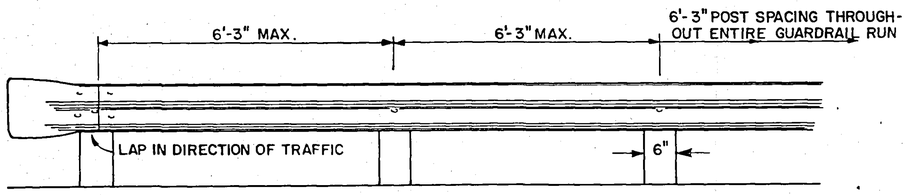

THE RAIL ELEMENTS SHALL BE SHOP CURVED TO FIT RADII FROM 20' TO 150'. RAIL ELEMENT NOT TO EXCEED 26'-01/2".

TRAILING END ELEMENT

ALL POST SPACING 6'-3" MAX. THROUGHOUT RUN. SEE STD. DWG 735-5 FOR STRUCT. APPROACH INSTALLATION.

GUARDRAIL PLACED ON WIDE FILLS SHALL BE 2' INSIDE SLOPE BREAK AND SHALL BE MEASURED FROM GROUND LINE RATHER THAN TOP OF PAVEMENT SEE STD DWG 815-1

** ALL DIMENSIONS SHALL CONFORM TO REQUIREMENTS OF ASTM DES. A-568 AND SUBJECT TO MANUFACTURING TOLERANCE.

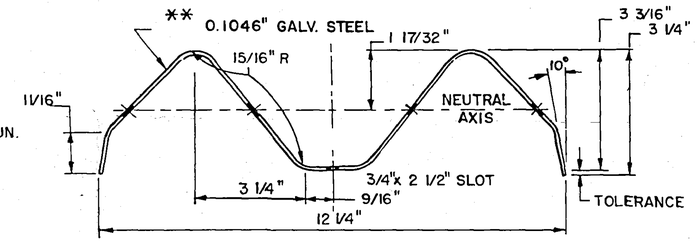

SECTION THRU RAIL ELEMENT

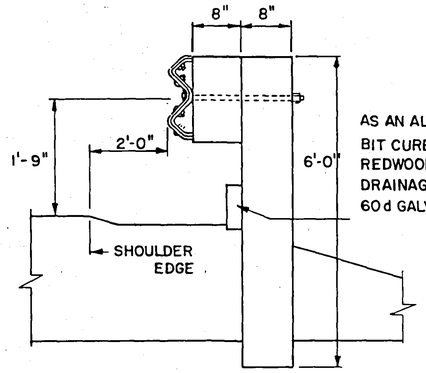

AS AN ALTERNATE TO BIT CURB USE A 2"x 6" REDWOOD PLANK IN DRAINAGE AREAS 60 d GALV. COM. NAILS.

WOOD POST AND BLOCK
(6'-3" MAX. POST SPACING)

POSTS AND BLOCKS SHALL BE TREATED WOOD IN ACCORDANCE W/ STD. SPECS.

DIMENSIONS: BLOCK - 6"x8"x 13"
POST - 6"x8"x 6'-0"
S 4 S OR ROUGH SAW

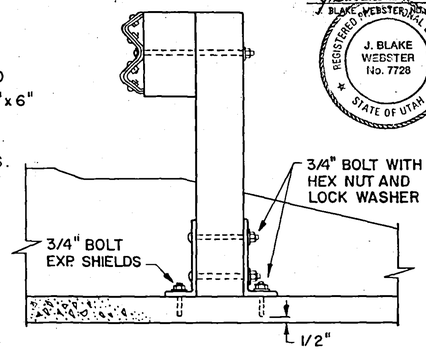

STRUCTURE MOUNTING BRACKET
(SEE BRACKET DETAIL BELOW)

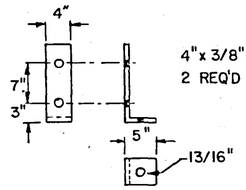

4"x 3/8"x 1'-5" GALV.
2 REQ'D PER POST

BRACKET DETAIL

(1) STEEL POSTS AND BLOCKS SHALL BE FABRICATED FROM MATERIAL CONFORMING TO AASHO M-183 (ASTM A-36) AND SHALL BE GALVANIZED AFTER FABRICATION IN ACCORDANCE WITH AASHO M-111 (ASTM A-123)

(2) EITHER STEEL POSTS AND BLOCKS OR WOOD POSTS AND BLOCKS MAY BE USED AT THE OPTION OF THE CONTRACTOR EXCEPT ONLY ONE TYPE OF POST AND BLOCK SHALL BE USED ON ANY ONE PROJECT.

(3) MANUFACTURED 3/4 x 035" ELECTRO GALV. TYPE I, CLASS B, GRADE II BAND IN ACCORDANCE WITH FED. SPEC. QQ S-781E. TIGHTEN TO DEPRESS POST CORNERS 1/8".

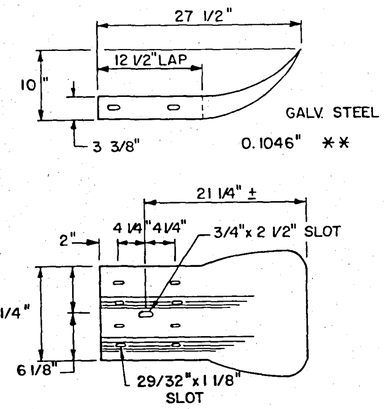

SINGLE GUARDRAIL

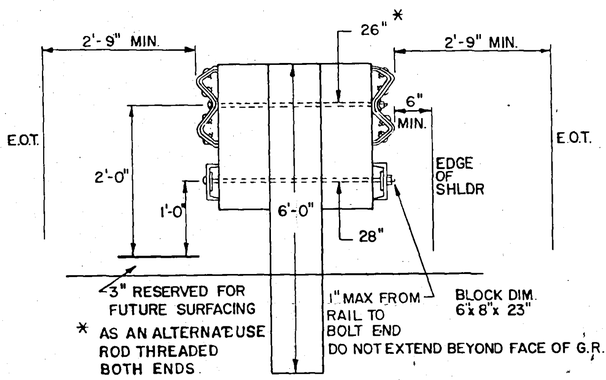

* AS AN ALTERNATE USE ROD THREADED BOTH ENDS.

DOUBLE RAIL INSTALLATION
(MEDIAN BARRIER)
FOR WIDTHS 8 FT. AND LESS THAN 16 FT.

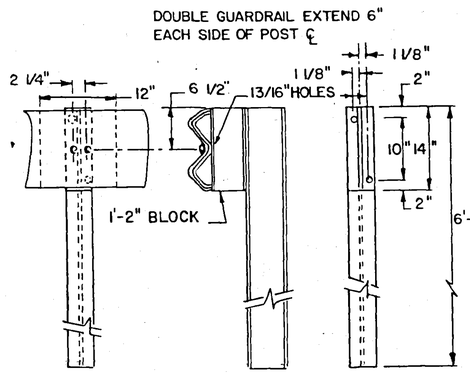

6 x 4 B 8.5 NO.1 POST & BLOCK
ALL BOLTS 5/8" Ø WITH HEX NUT & LOCK WASHER (GALVANIZED)

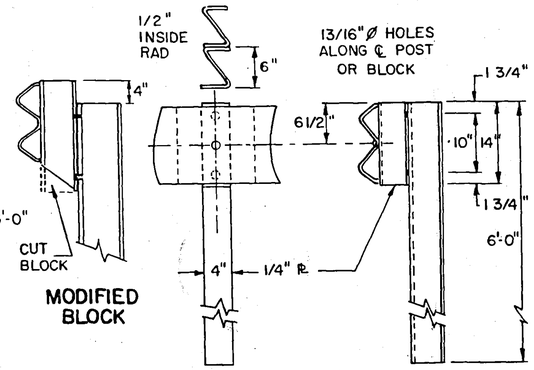

6"x 4" S SECTION POST & BLOCK
ALL BOLTS 5/8" Ø WITH HEX NUT & LOCK WASHER (GALVANIZED)

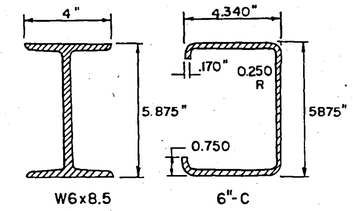

ALTERNATE POSTS

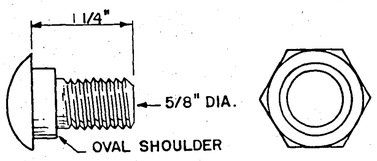

GALVANIZED SPLICE BOLT AND NUT

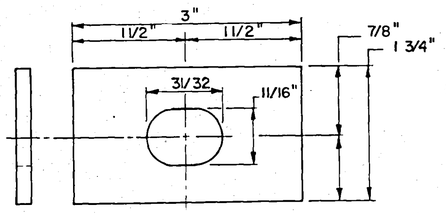

RECTANGULAR POST BOLT WASHER
(8 GAGE GALV.)

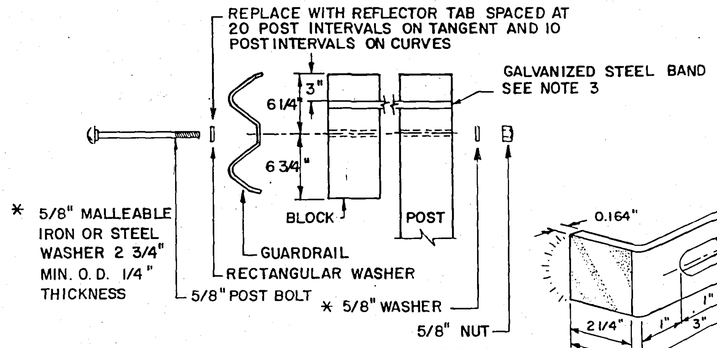

* 5/8" MALLEABLE IRON OR STEEL WASHER 2 3/4" MIN. O.D. 1/4" THICKNESS

POST BOLT HARDWARE
(GALVANIZED)

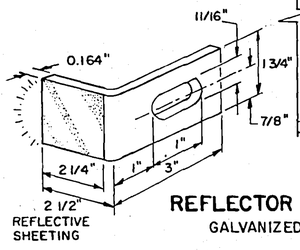

REFLECTOR TAB
GALVANIZED

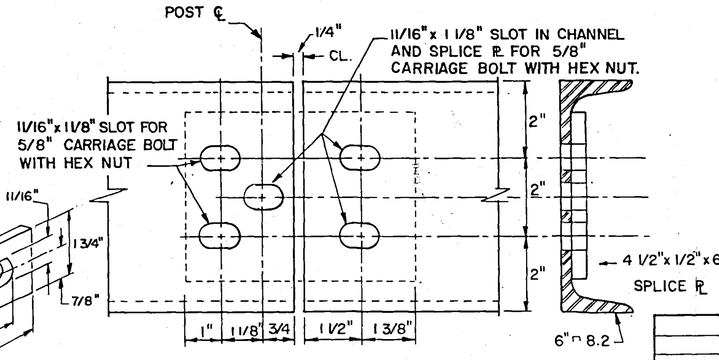

BOTTOM RAIL SPLICE
(RAIL SPLICES TO OCCUR AT POSTS ONLY)

REDRAWN 6-26-81

5-1

UTAH DEPARTMENT OF TRANSPORTATION

SUPERSEDES

REVISIONS
Date Appr.

BEAM GUARD RAIL

RECOMMENDED FOR APPROVAL:
David L. Sargent OCT 25, 19 73
CHAIRMAN STANDARDS COMMITTEE Date
APPROVED:
C V Anderson OCT 25, 19 73
ASSISTANT DIRECTOR

STD. DWG. NO. 735-1

As Constructed
Creamer & Noble
CONSULTING ENGINEERS

UTAH POWER & LIGHT COMPANY
DEPARTMENT OF MINING & EXPLORATION
Sheet 22 of 38 | AWB 8/9/84 | Dwg.# CM-10584-DS

22