LICENSED PROFESSIONAL ENGINEER
JOHN CHRISTENSEN
No. 165651
STATE OF UTAH

I CERTIFY THAT I AM A REGISTERED PROFESSIONAL ENGINEER IN THE STATE OF UTAH AND DO ALSO CERTIFY THAT THE SEDIMENTATION BOX SHOWN ON THIS PLAN REPRESENTS THE AS-BUILT CONDITION TO THE BEST OF MY KNOWLEDGE.

John Christensen 6-10-05
JOHN CHRISTENSEN NO. 165651 DATE

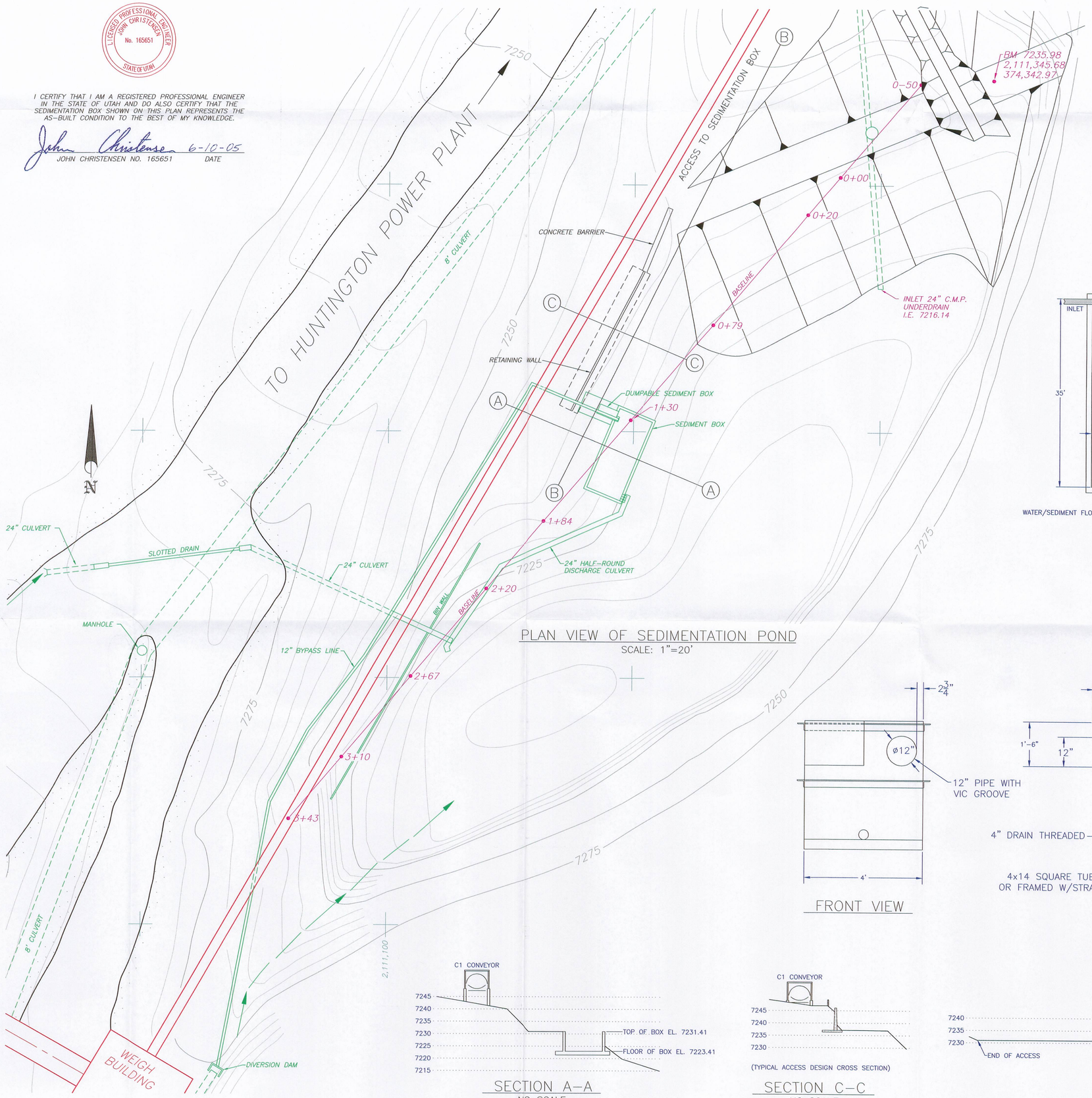

PLAN VIEW OF SEDIMENTATION POND
SCALE: 1"=20'

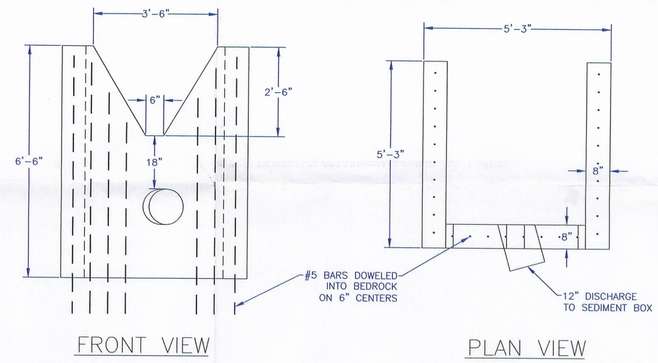

FRONT VIEW PLAN VIEW

DIVERSION DAM DETAIL
NO SCALE

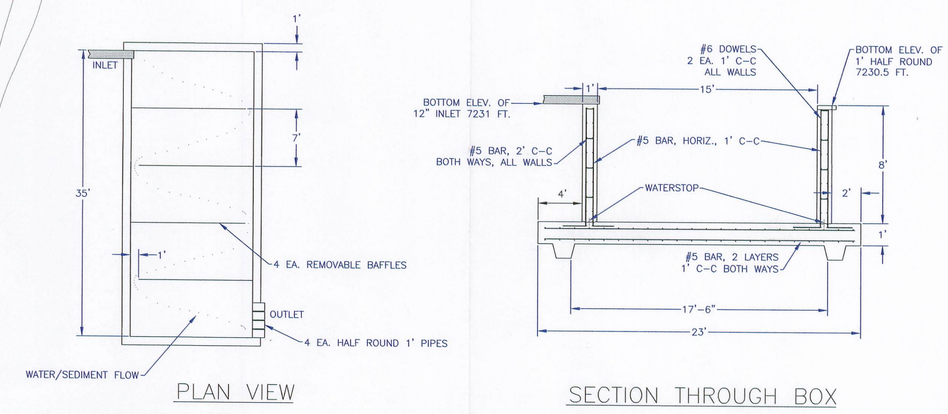

PLAN VIEW SECTION THROUGH BOX

SEDIMENT BOX DETAIL
NO SCALE

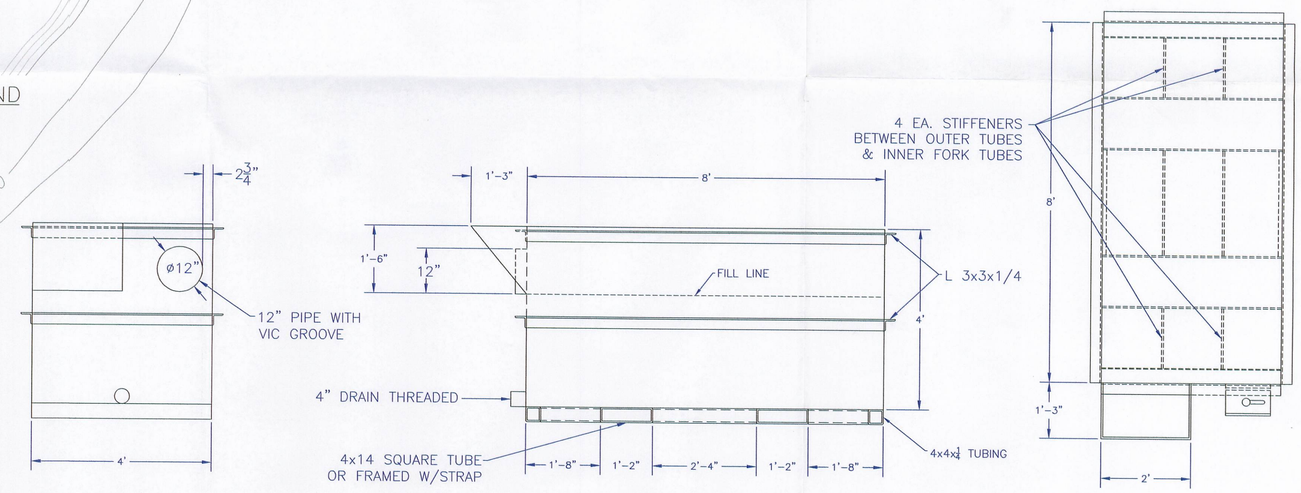

FRONT VIEW SIDE VIEW TOP VIEW

DUMPABLE SEDIMENT BOX
NO SCALE

SECTION A-A
NO SCALE

(TYPICAL ACCESS DESIGN CROSS SECTION)

SECTION C-C
NO SCALE

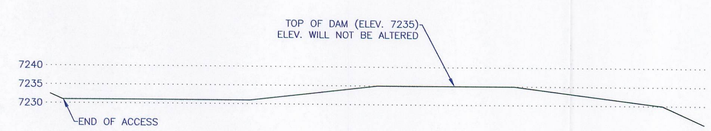

SECTION B-B
NO SCALE

RECEIVED
JUN 15 2005
DIV. OF OIL, GAS & MINING

CAD FILE NAME/DISK#: IMPOUND

3-14

ENERGY WEST
MINING COMPANY
HUNTINGTON, UTAH 84528

DEER CREEK MINE
SEDIMENT RETENTION BOX

DRAWN BY:	J.C.	DS1491D	
SCALE:	AS NOTED	DRAWING #:	
DATE:	MAY 23, 1994	SHEET 1 OF 1	REV.