INTERWEST MINING COMPANY
A SUBSIDIARY OF PACIFICORP

Interwest Mining Company
Huntington Office
P. O. Box 310
15 North Main Street
Huntington, UT 84528

January 18, 2017

Utah Coal Program
Utah Division of Oil, Gas, and Mining
1594 West North Temple, Suite 1210
P.O. Box 145801
Salt Lake City, Utah 84114-5801

**Subj: Amendment to Add a Post-Mining Water Discharge at Rilda Canyon Portals, Permit Area Change to Include Discharge Pipeline Route and Potential Treatment Facility Area, PacifiCorp, Deer Creek Mine, C/015/0018, Emery County, Utah.**

PacifiCorp, by and through its wholly-owned subsidiary, Interwest Mining Company, as mine manager, hereby submits an amendment to the Deer Creek Permit to include a permanent water discharge at the Deer Creek Mine Rilda Canyon Portals, as well as a water discharge pipeline to the Huntington Power Plant and a permit area change to include the pipeline route and potential treatment facility area at the Huntington Power Plant.

Interwest Mining Company proposed several alternatives to the Mine Safety and Health Administration to impound or redirect intercepted mine water underground to prevent discharge at Rilda Canyon. Plans submitted to MSHA have included retaining the water through the construction of underground bulkheads, retaining and diverting intercepted mine water to the Deer Creek portals using interlocking parallel plugs, and routing water using dams and plugs through a 12" borehole through an unmined portion connecting the Mill Fork Area to the southern area of the Deer Creek Mine to drain through the Deer Creek portals. This diversion would have allowed all water produced in the Mill Fork Area to be diverted and discharged from the Deer Creek Mine portals in Deer Canyon. Interwest Mining Company currently possesses an approved UPDES discharge point at this location. However, the Mine Safety and Health Administration has denied all plans for retaining or diverting intercepted mine water using dam type structures underground, instead requiring free flow out of the mine by gravity to the Rilda Canyon portals. The only alternative left to distribute the intercepted mine water is to discharge it from the Rilda Canyon Portals in Rilda Canyon.

In this alternative, PacifiCorp is proposing to install a permanent mine water discharge system in each of the two (2) portals of the Rilda Canyon Portal facility. Each portal will include two (2) HDPE pipes, a 25 foot thick solid concrete plug, and at least 25 feet of non-combustible backfill immediately outby the concrete portal plug. Each of the pipes will be perforated inby the plug and covered with 3 feet of coarse gravel to filter out any solids or objects that have the potential to cause clogging in the pipeline.

Because of the anti-degradation policy adopted by the United States Forest Service and the Utah Department of Water Quality in 1994, intercepted mine water cannot be discharged at any point within the Forest Boundary. The pipelines from the portals will report to a single 10" HDPE transfer line that will be constructed down Rilda Canyon adjacent to the mine site's primary access road. At the present boundary of the Deer Creek Mine disturbed area, PacifiCorp's Huntington Power Plant will extend the line adjacent to Emery County Road #306. The pipe will extend to Huntington Canyon and cross under State Highway 31. From this point, the line will be buried on the north and west side of Hwy 31 within the highway's recorded Right of Way. At the Huntington Plant water diversion structure, the line will again be routed under Hwy 31 to the power plant's Raw Water pond.

The water will discharge into the Plant's sediment pond. Huntington Power Plant is planning to consume the water in its generation of electrical power. Interwest Mining expects that once the water begins to discharge from the mine (timing is unknown), the plant will receive between 200 to 600 gallons per minute, all of which will be used in plant operations.

The discharge water is expected to contain elevated levels of total iron at first. The water with elevated iron will be diluted and consumed in plant operations. If in the future the plant operations terminate for any reason and the water still contains elevated iron and must be discharged (into Huntington Creek), the discharge will be treated to meet UPDES standards before it is discharged. PacifiCorp lands for a potential treatment plant will be dedicated for this purpose and the area will be added to the Deer Creek Permit.

Interwest Mining proposes to add discussion of the mine discharge and revise its mine permit boundary to include the pipeline route (12 feet wide x 5.6 miles long) and a treatment plant site, 2.5 acres on PacifiCorp land at the Huntington Plant.

A meeting was held at the UDOGM office on December 20, 2016 to discuss and reach agreement on how the pipeline route in its entirety can be added to the Deer Creek Mine permit to the mutual satisfaction of both PacifiCorp and DOGM. During the meeting, the following items were discussed and confirmed:

Inclusion of the post mine gravity drainage/pipeline corridor within the permit boundary involves resolving several permitting issues (December 20, 2016 meeting with DOGM):

1. Amendment to the Deer Creek Mine permit to expand the permit boundary to include the pipeline corridor
2. Terminus end of the pipeline corridor – pipe outlet to the Huntington Raw Water pond.
3. Huntington Plant operation contingency plan
4. Potential third party interference issues/complying with DOGM regulations.
5. Bonding for performance and maintenance
6. Monitoring post closure mine hydrology
7. DWQ UPDES permit amendment modification – Outfall 003

8. Acknowledgement by DOGM that NEWUSSD is interested in the water source transported by the mine relief pipeline.

Explanation of and PacifiCorp's commitment to the issues outlined above:

1. Amendment to the Deer Creek Mine permit to expand the permit boundary to include the pipeline corridor:
    - PacifiCorp will amend the Deer Creek Mine permit boundary to include the pipeline corridor:
        - Width in general shall be 12 ft. for its entire length.
        - An enlarged area for a potential treatment plant, approximately 250' x 250', will be permitted at terminus of the pipeline.
        - PacifiCorp will provide DOGM with as-built metes and bounds description of the pipeline corridor (initially the permit area extension is described by aliquot parts)
2. Terminus end of the permit boundary will not include Raw Water Pond at Huntington Plant. PacifiCorp committed to analyzing potential hydrologic impacts to the Raw Water Pond including the diversion of mine water. Based on the analysis provided in Volume 12 Appendix B and outlined below, the total amount of iron production (goethite, FeOOH) would be insignificant in comparison to the total sediment production (total suspended solids/natural sediment of Huntington River diverted to the Raw Water Pond):
        - Raw Water Pond Technical Details:
            - Date of Construction: 1972
            - Capacity: 327 acre feet
            - Pond liner: 2' of clay and silts compacted in 8" lifts to 98% density (ASTM D1557-70)
        - PacifiCorp analyzed the potential sediment and total iron contribution to the Raw Water Pond based on actual flow data and water quality analysis of Huntington River and Deer Creek Mine intercepted water (refer to Volume 12 Appendix D Final Closure Plan – Appendix D: Sediment Production to Raw Water Pond versus Production of Goethite (FeOOH).
            - Based on sampling analysis Huntington Plant Diversion to Raw Water Pond sediment production varied from (Huntington River Diversion rates from 6,700 gpm to 9,700 gpm and average Huntington Creek Site HCC01, TSS 35 mg/L):
                - 1.4 to 2.0 tons/day
                - 0.70 to 1.01 yard$^3$/day

        - 254 to 367 yard$^3$/year
    - Based on sampling analysis of Deer Creek intercepted groundwater production from 11th – 17th West projected goethite production would yield (11th – 17th West flow rate of 300 gpm, total iron of 1.3 mg/L):
        - 0.004 tons/day
        - 0.0010 yard$^3$/day
        - 0.3794 yard$^3$/year
    - Total sediment production equates to 99.85% to 99.90% of the total contribution of sediment from Huntington Creek and 0.1% to 0.15 % from projected goethite in the mine water.
  - Any cleaning of the raw water pond will be the responsibility of Huntington Plant, where pond cleanings will be disposed of in a state approved landfill.

3. Huntington Plant operation contingency plan:
    - If Huntington Power Plant is taken off line indefinitely for any reason and mine discharge water is not in compliance with the water quality numeric criteria determined by DEQ, a treatment facility will be constructed and compliant water will be discharged into Huntington Creek under the jurisdiction of the Division of Water Quality (DEQ) - Deer Creek UPDES permit.
4. Potential third party interference issues/complying with DOGM regulations.
    - Acknowledgement by DOGM that the pipeline/permit corridor is a multiple use area over which PacifiCorp has no control. PacifiCorp requests that the following items be included as permit conditions:
        - Pipeline right-of-way (area to be permitted) is within previously disturbed, existing rights-of-way.
        - Pipeline right-of-way is completely exposed to traffic, elements, third party interferences, etc.
        - No way to control external activities that might affect pipeline infrastructure.
        - No way to fence off or limit access to pipeline.
        - No way to mark or put permit signage along pipeline.
5. Bonding for performance and maintenance:
    - PacifiCorp has secured performance and maintenance bonds from Emery County (Road 306) and State of Utah Department of Transportation (State Road 31)
6. Monitoring post closure mine hydrology:

- The water quality of mine discharge shall be sampled at least monthly and analyzed for compliance with DEQ water quality numeric criteria and submitted to DOGM quarterly.
- In the event of Number 3, a reclamation surety shall be provided to DOGM for the constructed treatment facility operation and its reclamation until the conditions in Number 3 are met.
- If the mine discharge water quality falls within the range of numeric criteria determined by DEQ for six straight months (6-month running average), water may be discharged into the Huntington Creek under a UPDES permit or transferred to NEWUSSD. Permit reduction procedures shall commence and DOGM shall relinquish jurisdiction.

7. DWQ UPDES permit amendment modification – Outfall 003:
    - PacifiCorp has collected hundreds of samples documenting the quality of the intercepted groundwater at the Deer Creek Mine. Samples collected by PacifiCorp are analyzed by a third party, State Certified Laboratory. Analysis of the water resources includes not only solute constituents documenting the geochemical nature of the groundwater, but in addition whole effluent testing has been used to verify that the groundwater discharge is not detrimental to aquatic life. All water, whether surface or groundwater, includes minor amounts of constituents which contribute to the overall chemistry of the water. Levels of these constituents depend upon the hydrogeologic setting and interaction of the groundwater and the geologic formations from which it derives. To assist State of Utah Division of Water Quality (DWQ) in reviewing of PacifiCorp's revised UPDES permit application for a new outfall (003), PacifiCorp amended and expanded water quality analysis test procedures of the intercepted groundwater to comply with the EPA Form 2C requirements. PacifiCorp continues to sample and analyze the intercepted groundwater at Deer Creek, and to provide the detailed results to multiple governmental agencies.
    - The following table compares the numeric standards established by the State of Utah (Table 2.14.2 – Numeric Criteria for Aquatic Wildlife 3C – Huntington Creek) to analyses of groundwater intercepted in the Deer Creek Mine projected to be discharged at Rilda Canyon Portals. As demonstrated in this table, the projected water quality discharged from the mine exceeds (is in compliance with) the Numeric Criteria for Aquatic Wildlife 3C – Huntington Creek.

| Parameter | State of Utah<br>Utah<br>Administrative Code<br><br>Standards of Quality for Waters of the State Rule R317.2<br><br>Table 2.14.2<br>*Numeric Criteria for Aquatic Wildlife 3C – Huntington Creek* | Deer Creek Mine<br>Intercepted Groundwater<br>Projected Discharge at Rilda Canyon Portals Note 1 |
|---|---|---|
| **pH (units)** | 6.5 – 9.0 | 7.38 |
| **Aluminum, ug/L (dissolved)<br>(1 hour average)** | 750 | 50<br>Detected in three out of the six samples |
| **Arsenic, ug/L (total)<br>(1 hour average)** | 340 | ND<br>Lab reporting limit 10 |
| **Cadmium, ug/L (total and dissolved)<br>(1 hour average)** | 2.0 | ND<br>Lab reporting limit 1 |
| **Chromium, ug/L (total)<br>(1 hour average)** | 16 | 3.6<br>Six samples analyzed |
| **Copper, ug/L (total and dissolved)<br>(1 hour average)** | 13 | ND<br>Lab reporting limit 10 |
| **Lead, ug/L (total and dissolved)<br>(1 hour average)** | 65 | ND<br>Lab reporting limit 10 |
| **Mercury, ug/L (total)<br>(4 day average)** | 0.012 | ND<br>Lab reporting limit <0.2<br>Six samples analyzed |
| **Nickel, ug/L (total)<br>(1 hour average)** | 468 | 34.6<br>Five samples analyzed |
| **Selenium, ug/L (total)<br>(1 hour average)** | 18.4 | ND<br>Lab reporting limit <2 |
| **Silver, ug/L (total)<br>(1 hour average)** | 1.6 | ND<br>Lab reporting limit <2 |
| **Zinc, ug/L (total and dissolved)<br>(1 hour average)** | 120 | 28.5<br>Detected in two out of the seven samples |
| Sample period represents the last six months of sampling from 11th – 17th West sealed area<br>Note 1: Samples collected from 11th – 17th West discharge<br>ND: Not Detected | | |

- Alteration of the existing water chemistry in the Huntington Plant Raw Water Pond will be insignificant. In terms of total dissolved solids (TDS), introduction of the mine water will cause the overall TDS of the Raw Water Pond to increase from approximately 5 mg/L to 18 mg/L (mg/L –

parts/million) depending on the rate of Huntington River diversion and volume of mine water diverted to the Raw Water Pond.

Data Transmitted to the USFS (8/1/2016)
Water Diversion Total Dissolved Solids Mass Balance Calculation
Huntington Creek 7,000 to 11,000 gpm (93 to 98% of total diversion)
Deer Creek Mine – Rilda Canyon 200 – 500 gpm (2 to 7% of total diversion)
Projected Huntington Power Plant Intake Water Quality (Cooling Towers): TDS (mg/L) Values

Average Huntington Creek Diversion (7,000 gpm) with Mine Water varying from 200 to 500 gpm
Total diversion 7,000 gpm (Huntington Creek @ 6,500 gpm, Mine Water @ 500 gpm)
Total Dissolved Solids 262 mg/L Change in TDS: Increase of 18 mg/L
Total diversion 7,000 gpm (Huntington Creek @ 6,800 gpm, Mine Water @ 200 gpm)
Total Dissolved Solids 251 mg/L Change in TDS: Increase of 7 mg/L

High Huntington Creek Diversion (11,000 gpm) with Mine Water varying from 200 to 500 gpm
Total diversion 11,000 gpm (Huntington Creek @ 10,600 gpm, Mine Water @ 500 gpm)
Total Dissolved Solids 255 mg/L Change in TDS: Increase of 11 mg/L
Total diversion 11,000 gpm (Huntington Creek @ 10,800 gpm, Mine Water @ 200 gpm)
Total Dissolved Solids 248 mg/L Change in TDS: Increase of 5 mg/L

The maximum increase in TDS in the Huntington Power Plant cooling towers is projected to be an increase of 18 mg/L.

- Huntington Plant water usage operation systems will remain constant
  - The Deer Creek Mine water supply has an increased TDS concentration when compared to the Huntington Creek supply; however, the Huntington plant cooling tower circulating water quality is controlled through a water treatment process such that the TDS concentration of the circulating water will not be affected by the use of the supplemental Deer Creek Mine supply. In essence, although the fraction of the make-up water supply to the Huntington cooling tower circulating water system from the Deer Creek Mine will have an increased TDS concentration as compared to the Huntington Creek water supply, the cooling tower circulating water system will be controlled to maintain the current (a consistent) TDS concentration. This means that the overall chemistry in terms of TDS of the water used in the plant operations and ultimately diverted to the Huntington Plant Irrigation Reservoir will remain constant. Use of the mine water will not alter the current irrigation system used at the plant

8. Acknowledgement by DOGM that NEWUSSD is interested in the water source transported by the mine relief pipeline.
   - North Emery Water Users Special Service District (NEWUSSD) Board has voted to pursue pipeline and water when water is in compliance.
   - NEWUSSD may use pipeline for Rilda Springs flow as well.

- NEWUSSD will need access and control of pipeline and valves up to the Rilda portals (into the reclaimed disturbed area of Rilda Canyon facilities until Phase III bond release).

PacifiCorp will deed the pipeline corridor in its entirety and water to NEWUSSD and remove from permit area with permit reduction.

C1/C2 forms are included with this submittal. A Redline/Strike-out copy of the revised text in Volume 11 and Volume 12 of the Deer Creek MRP is included for your review as well as the associated revised maps that show detailed designs of the discharge plan.

If there are any questions or concerns with the submittal, please contact me at 435-687-4712, Chuck Semborski at 435-687-4720, or Dennis Oakley at 435-687-4825.

Sincerely,

Kenneth S. Fleck

Kenneth Fleck
Geology and Environmental Affairs Manager

Enclosures

Cc File
Scott Child

# APPLICATION FOR COAL PERMIT PROCESSING

Permit Change ■ New Permit ☐ Renewal ☐ Exploration ☐ Bond Release ☐ Transfer ☐

**Permittee:** PacifiCorp

**Mine:** Deer Creek Mine **Permit Number:** C/015/0018

**Title:** Amendment to Add a Post-Mining Water Discharge at Rilda Canyon Portals, Permit Area Change to Include Discharge Pipeline Route and Potential Treatment Facility Area, PacifiCorp, Deer Creek Mine, C/015/0018, Emery County, Utah

**Description,** Include reason for application and timing required to implement:

**Instructions:** If you answer yes to any of the first eight (gray) questions, this application may require Public Notice publication.

☒ Yes ☐ No 1. Change in the size of the Permit Area? Acres: 367.50 Disturbed Area: 0 ■ increase ☐ decrease.
☐ Yes ☒ No 2. Is the application submitted as a result of a Division Order? DO# _____
☐ Yes ☒ No 3. Does the application include operations outside a previously identified Cumulative Hydrologic Impact Area?
☐ Yes ☒ No 4. Does the application include operations in hydrologic basins other than as currently approved?
☐ Yes ☒ No 5. Does the application result from cancellation, reduction or increase of insurance or reclamation bond?
☐ Yes ☒ No 6. Does the application require or include public notice publication?
☒ Yes ☐ No 7. Does the application require or include ownership, control, right-of-entry, or compliance information?
☒ Yes ☐ No 8. Is proposed activity within 100 feet of a public road or cemetery or 300 feet of an occupied dwelling?
☐ Yes ☒ No 9. Is the application submitted as a result of a Violation? NOV # _____
☒ Yes ☐ No 10. Is the application submitted as a result of other laws or regulations or policies?
*Explain*: MSHA and DOGM denied plans to retain intercepted groundwater inside the mine.
☐ Yes ☒ No 11. Does the application affect the surface landowner or change the post mining land use?
☐ Yes ☒ No 12. Does the application require or include underground design or mine sequence and timing? (Modification of R2P2)
☐ Yes ☒ No 13. Does the application require or include collection and reporting of any baseline information?
☐ Yes ☒ No 14. Could the application have any effect on wildlife or vegetation outside the current disturbed area?
☐ Yes ☒ No 15. Does the application require or include soil removal, storage or placement?
☐ Yes ☒ No 16. Does the application require or include vegetation monitoring, removal or revegetation activities?
☒ Yes ☐ No 17. Does the application require or include construction, modification, or removal of surface facilities?
☒ Yes ☐ No 18. Does the application require or include water monitoring, sediment or drainage control measures?
☒ Yes ☐ No 19. Does the application require or include certified designs, maps or calculation?
☐ Yes ☒ No 20. Does the application require or include subsidence control or monitoring?
☐ Yes ☒ No 21. Have reclamation costs for bonding been provided?
☐ Yes ☒ No 22. Does the application involve a perennial stream, a stream buffer zone or discharges to a stream?
☐ Yes ☒ No 23. Does the application affect permits issued by other agencies or permits issued to other entities?

**Please attach one (1) review copy of the application.**

I hereby certify that I am a responsible official of the applicant and that the information contained in this application is true and correct to the best of my information and belief in all respects with the laws of Utah in reference to commitments, undertakings, and obligations, herein.

Kenneth S. Fleck
Print Name

Kenneth S. Fleck
Sign Name, Position, Date

Subscribed and sworn to before me this 18 day of JANUARY, 20 17

MacKenzi Grange
Notary Public

My commission Expires: March 16, 2020 }
Attest: State of UTAH } ss:
County of EMERY

NOTARY PUBLIC
MACKENZI GRANGE
Commission No. [illegible]
Commission Expires
MARCH 16, 2020
STATE OF UTAH

| For Office Use Only: | Assigned Tracking Number: | Received by Oil, Gas & Mining |
|---|---|---|
| | | |

Form DOGM- C1 (Revised 9/17/2013)

# APPLICATION FOR COAL PERMIT PROCESSING
## Detailed Schedule Of Changes to the Mining And Reclamation Plan

**Permittee:** PacifiCorp

**Mine:** Deer Creek Mine **Permit Number:** C/015/0018

**Title:** Amendment to Add Post-Mining Discharge at Ridge Canyon Portals, Permit Area Change to Include Discharge Pipeline Route and Potential Treatment Facility, Deer Creek Mine, C/015/0018, Emery County, Utah

Provide a detailed listing of all changes to the Mining and Reclamation Plan, which is required as a result of this proposed permit application. Individually list all maps and drawings that are added, replaced, or removed from the plan. Include changes to the table of contents, section of the plan, or other information as needed to specifically locate, identify and revise the existing Mining and Reclamation Plan. Include page, section and drawing number as part of the description.

| | | | DESCRIPTION OF MAP, TEXT, OR MATERIAL TO BE CHANGED |
|---|---|---|---|
| ☐ Add | ■ Replace | ☐ Remove | Legal and Financial Volume, Text Section, replace entire section |
| ■ Add | ☐ Replace | ☐ Remove | Legal and Financial Volume, Appendix B, add UDOT and Emery County agreements and bonds, 23 pages |
| ☐ Add | ■ Replace | ☐ Remove | Legal and Financial Volume, Appendix G, replace Deer Creek permit boundary description |
| ☐ Add | ■ Replace | ☐ Remove | Volume 11, R645-301-300 Biology, Maps Tab, 300-1, 300-2, 300-3, 300-4, 300-5, 300-6 |
| ☐ Add | ■ Replace | ☐ Remove | Volume 11, R645-301-400 Land Use, Maps Tab, 400-1 |
| ☐ Add | ■ Replace | ☐ Remove | Volume 11, R645-301-500 Engineering, replace entire chapter |
| ☐ Add | ■ Replace | ☐ Remove | Volume 11, R645-301-500 Engineering, Figures Tab, replace Figure R645-301-500d |
| ☐ Add | ■ Replace | ☐ Remove | Volume 11, R645-301-500 Engineering, Maps Tab, 500-1 (sheets 1-3 of 3), 500-2, 500-3, 500-4 (sheets 1-4 of 4) |
| ☐ Add | ■ Replace | ☐ Remove | Volume 11, R645-301-600 Geology, Maps Tab, 600-1 |
| ☐ Add | ■ Replace | ☐ Remove | Volume 11, R645-301-700 Hydrology, replace entire chapter |
| ☐ Add | ■ Replace | ☐ Remove | Volume 11 A, Appendix Volume, Table of Contents, replace entire TOC |
| ■ Add | ☐ Replace | ☐ Remove | Volume 11 A, Appendix Volume, Engineering Appendix, Add Appendix H cover page |
| ■ Add | ☐ Replace | ☐ Remove | Volume 11 A, Appendix Volume, Engineering, Appendix H, Add Facilities Design, 68 pages |
| ■ Add | ☐ Replace | ☐ Remove | Volume 11 A, Appendix Volume, Engineering, Appendix I, Add Appendix I cover page |
| ■ Add | ☐ Replace | ☐ Remove | Volume 11 A, Appendix Volume, Engineering, Appendix I, Add Pipeline Design, 26 pages |
| ☐ Add | ■ Replace | ☐ Remove | Volume 11 B, Appendix Volume, Hydrology, Map 700-4 |
| ☐ Add | ■ Replace | ☐ Remove | Volume 12, R645-301-700 Hydrology, replace entire chapter |
| ■ Add | ☐ Replace | ☐ Remove | Volume 12, R645-301-700 Hydrology, add Appendix D |
| ■ Add | ☐ Replace | ☐ Remove | Volume 12, R645-301-700 Hydrology, add Appendix E |
| ☐ Add | ■ Replace | ☐ Remove | Volume 12, R645-301-700 Hydrology, Maps Tab, Map MFS1830D (includes data from MFS1831D and MFS1832D) |
| ☐ Add | ☐ Replace | ■ Remove | Volume 12, R645-301-700 Hydrology, Maps Tab, MFS1831D |
| ☐ Add | ☐ Replace | ■ Remove | Volume 12, R645-301-700 Hydrology, Maps Tab, MFS1832D |
| ■ Add | ☐ Replace | ☐ Remove | Volume 12, R645-301-700 Hydrology, Maps Tab, MFS1902D |
| ■ Add | ☐ Replace | ☐ Remove | Volume 12, R645-301-700 Hydrology, Maps Tab, MFS1904D |
| ■ Add | ☐ Replace | ☐ Remove | Volume 12, R645-301-700 Hydrology, Maps Tab, MFS1905D |
| ☐ Add | ☐ Replace | ☐ Remove | |
| ☐ Add | ☐ Replace | ☐ Remove | |
| ☐ Add | ☐ Replace | ☐ Remove | |

| Any other specific or special instruction required for insertion of this proposal into the Mining and Reclamation Plan. | Received by Oil, Gas & Mining |
|---|---|
| Insertion of Special Condition to the Permit (MRP) as per outlined in Volume 12 Hydrology, R645-301-728 PHC, Post-Mining | |

# PacifiCorp

# Deer Creek Mine

# C/015/0018

**Amendment to Add a Post-Mining Water Discharge at Rilda Canyon Portals, Permit Area Change to Include Discharge Pipeline Route and Potential Treatment Facility Area, PacifiCorp, Deer Creek Mine, C/015/0018, Emery County, Utah**

## Legal and Financial Volume, Text Section

**Insert into Legal and Financial Volume, replace entire section**

# PacifiCorp

## Legal and Financial Information

### Cottonwood C/015/0019, Deer Creek Mine C/015/0018

This application for a mining and/or reclamation permit is submitted to the State of Utah, Department of Natural Resources, Division of Oil, Gas and Mining, in accordance with the Utah Coal Mining and Reclamation Act, Title 40, Chapter 10, U.C.A., 1953 (as amended); the applicable rules and regulations adopted thereunder; the Surface Mining Control & Reclamation Act of 1977, and applicable regulations adopted thereunder (30 CFR 770, et seq.), the Cooperative Agreement between the State of Utah and the United States Secretary of Interior, and other applicable laws and regulations. The information divulged in the following sections is common to the two referenced permits held by PacifiCorp. Any information specific to a particular permit is listed under the related permit name.

R645-301-112: Identification of Interests

PacifiCorp, an Oregon Corporation, was incorporated on August 11, 1987. On January 9, 1989, Utah Power & Light Company (UP&L), a Utah Corporation, and PacifiCorp, a Maine Corporation, were merged with and into PacifiCorp, an Oregon Corporation. At that time, all outstanding shares of Capital Stock of PacifiCorp (Maine) and UP&L were converted into shares of capital stock of PacifiCorp (Oregon). UP&L became a Division of PacifiCorp (Oregon). On October 1, 1990, Energy West Mining Company, a wholly owned subsidiary of PacifiCorp, replaced the UP&L Mining Division as operator of the Utah mining operations. In 2015, East Mountain Energy replaced Energy West Mining Company as mine operator of the Deer Creek Mine. PacifiCorp now owns the following mines in Utah: the Deer Creek Mine and Cottonwood Mine. PacifiCorp's Interwest Mining Company, a wholly owned subsidiary, manages all mines owned by PacifiCorp.

The following background information is provided on the historical changes in ownership of PacifiCorp. On November 29, 1999, PacifiCorp was acquired by Scottish Power. Later on, effective as of March 21, 2006, MidAmerican Energy Holdings Company (MEHC) acquired PacifiCorp from Scottish Power. MEHC is a global energy company based in Des Moines, Iowa. Then effective April 30, 2014, MEHC became known as Berkshire Hathaway Energy Company.

With this change, PacifiCorp still retains its original corporate identity within the Berkshire Hathaway Energy Company organizational structure. PacifiCorp, an Oregon corporation, remains the same Oregon corporation today as when initially incorporated on August 11, 1987. PacifiCorp continues to operate as a public utility providing electric service to customers in the six western states of Oregon, California, Washington, Idaho, Utah and Wyoming.

Effective June 29, 2015, East Mountain Energy, LLC replaced Energy West Mining Company as mine operator of the Deer Creek Mine. The Deer Creek Mine is no longer a producing mine and is in the process of final closure and sealing of the mine in its entirety. East Mountain Energy, LLC is providing interim day-to-day care while an in-mine ground water management system is put in place and the mine is completely sealed and closed. PacifiCorp has no affiliation with East Mountain Energy, LLC, other than a contractual service agreement to provide interim day-to-day care of the mine until the mine has been closed and permanently sealed or other arrangements have been implemented. All DOGM/OSM permitting, compliance and regulatory matters pertaining to the Deer Creek Mine (permit no. C/015/0018) and the Cottonwood/Wilberg Mine (permit no. C/015/0019) will be handled by our Huntington office staff of Interwest Mining Company, a wholly-owned subsidiary of PacifiCorp and managing agent for PacifiCorp's coal mine operations in Utah. PacifiCorp owns the following mines in Utah: the Deer Creek Mine and Cottonwood Mine.

The information required by the regulations with respect to PacifiCorp and its officers and directors is contained herein as part of Appendix A.

R645-301-112.210: Applicant

| | |
|---|---|
| PacifiCorp<br>c/o Interwest Mining Company<br>1407 West North Temple<br>Suite 110<br>Salt Lake City, Utah 84116<br>(801)220- 4207 | The Mine Permit Managing Agent is:<br>Interwest Mining Company<br>Huntington Office<br>PO Box 310<br>15 North Main Street<br>Huntington, Utah 84528<br>(435) 687-9821 |

R645-301-112.220 Applicant's Resident Agent:

The Resident Agent who will accept Service of Process is Kenneth S. Fleck, PacifiCorp, Interwest Mining Company – Huntington Office, PO Box 310, Huntington, Utah 84528, (435) 687-4712.

R645-301-112.230: Responsibility for Reclamation Fee

PacifiCorp, an Oregon Corporation, with an office located at 1407 West North Temple, Suite 110, Salt Lake City, Utah 84116, telephone number (801) 220- 4207, will be responsible for the payment of the reclamation fee. Due to the fact that PacifiCorp is a corporation, no one individual can be held responsible for payment of the reclamation fee.

R645-301-112.300: Corporate Directors and Officers

See **Appendix A** for complete list.

R645-301-112.400: Identification Names, Numbers, and Dates of Issuance

PacifiCorp has been issued mining permits for the coal mining operations listed below by the State of Utah, Division of Oil, Gas and Mining. The PacifiCorp Employer I.D. Number is 93-0246090.

PacifiCorp holds the following coal mining interests:

**Utah Operations (100% Interest)**

Cottonwood/Wilberg Mine
DOGM C/015/019 renewed July 6, 2014
MSHA ID NO. 42-01944 issued November 12, 2015
Emery County, Utah

Deer Creek Mine
DOGM C/015/018 renewed February 7, 2016
MSHA ID NO. 42-00121 issued March 19, 1973
Emery County, Utah

**Wyoming Operations –**
**Bridger Coal Company (66.67% Interest)**

Jim Bridger Mine - Employer ID No.: 93-0246090
WDEQ-LQD PERMIT NO. 338-T7 issued March 19, 2013
MSHA ID NO. 48-00677 issued September 28, 1973
Sweetwater County, Wyoming

**~~Glenrock Coal Company (100% Interest)~~**

~~Dave Johnston Mine~~
~~WDEQ-LQD PERMIT NO. 291-T8 issued April 10, 2013~~
~~MSHA ID NO. 48-00085 issued February 3, 1976~~
~~Converse County, Wyoming~~

**Colorado Operations**

**Trapper Mining Company (21.4% Interest)**

Trapper Mine - Employer ID: 522071379
CO Dept. of Mineral and Geology Permit No.: C-81-010
Renewal (RN-6) Approved July 9, 2013
MSHA ID No.: 05-02838 issued 12/01/80
Moffat County, Colorado

For miscellaneous licenses, permits and approvals obtained by the applicant for each mining operation, see Appendix B.

PacifiCorp commits to any special conditions issued by the Division of Oil, Gas, and Mining. PacifiCorp does reserve the right to apply for changes to these special conditions as data collection information dictates.

PacifiCorp commits to comply with any and all United States Forest Service and Bureau of Land Management's requirements for permit issuance and lease stipulations.

R645-301-112.500: Surface and Subsurface Owners of Record of the Area to be Mined/
R645-301-114: Right of Entry Information

See Appendix C for information regarding surface and subsurface ownership and right of entry to underground coal mining operations. All leases and rights of entry for the respective mine permits are currently held in the name of PacifiCorp. For coal ownership, see Plate 1-1 in each respective permit. For surface owners see Plate 1-2. The information provided in the table below summarizes the total underground right of entry acres for each PacifiCorp coal mine.

| | | Right of Entry Acres* (Refer to Appendix C) | Permit Acres** (Refer to Appendix G) |
|---|---|---|---|
| **Cottonwood/Wilberg** | Federal Coal Leases | 3,942.77 | |
| | State Coal Leases | | |
| | Fee | 103.72 | |
| | Total | 4,046.49 | 4,092.00 |
| **Deer Creek** | Federal Coal Leases | 19,895.11 | |
| | State Coal Leases | 0 | |
| | Fee | 1,023.72 | |
| | Total | 20,918.83 | ~~19,940.60~~ 20,308.10 |

*Refers to underground Right of Entry.

**Permit acreages include surface areas above Federal, State, and fee coal leases,.and other surface Right Of Way's, State Use Lease Application's, and Forest Service Special Use Permits.

R645-301-112.600: Surface and Subsurface Owners of Record Contiguous to the Permit Area

The following states the owners of land (surface and subsurface) that surround the PacifiCorp permit areas. Refer to the maps in each respective permit which show all contiguous surface and sub-surface owners of record.

| **Cottonwood/Wilberg Mine** | |
|---|---|
| PacifiCorp<br>1407 West North Temple<br>Suite 110<br>Salt Lake City, Utah 84116<br>(801) 220-4207 | Corporation of the Presiding Bishop<br>of the Church of Jesus Christ of<br>Latter-day Saints<br>c/o Natural Resource Section<br>50 East North Temple, 12th Floor<br>Salt Lake City, Utah 84150-0001 |
| US Department of the Interior<br>Bureau of Land Management (BLM)<br>440 West 200 South<br>Salt Lake City, Utah 84101-1345<br>(Subsurface) | US Forest Service<br>Manti-LaSal National Forest<br>599 Price River Dr.<br>Price, Utah 84501<br>(Surface) |
| Karl A. Seely<br>P.O. Box 934<br>Castle Dale, Utah 84513 | Fossil Rock Resources LLC<br>6100 Dutchmans Lane, 9th Floor<br>Lousiville, Kentucky 40205 |
| Lavar J. & Phyllis G. Jensen Trustees<br>P.O. Box 207<br>Elmo, Utah 84521 | |

| Deer Creek Mine | |
|---|---|
| PacifiCorp<br>1407 West North Temple<br>Suite 110<br>Salt Lake City, Utah 84116<br>(801) 220-4207 | C.O.P. Coal Development Corp.<br>3753 South State<br>Salt Lake City, Utah 84115 |
| US Department of the Interior<br>Bureau of Land Management (BLM)<br>440 West 200 South<br>Salt Lake City, Utah 84101-1345<br>(Subsurface) | State of Utah<br>School and Institutional Trust Lands Administration (SITLA)<br>675 East 500 South, Suite 500<br>Salt Lake City, Utah 84102-2818 |
| US Forest Service<br>Manti-LaSal National Forest<br>599 Price River Dr.<br>Price, Utah 84501<br>(Surface) | Corporation of the Presiding Bishop<br>of the Church of Jesus Christ of<br>Latter-day Saints<br>c/o Natural Resource Section<br>50 East North Temple, 12th Floor<br>Salt Lake City, Utah 84150-0001 |
| Stanley G. & James W. Jensen<br>P.O. Box 415<br>Castle Dale, Utah 84513<br>(Surface) | The Malcolm McKinnon Estate<br>Zions First National Bank Trustee<br>Salt Lake City, Utah 84111 |
| Andalex Resources Inc. - ~~50%~~<br>~~Intermountain Power Agency - 50%~~<br>c/o Genwall Resources<br>P.O. Box 1420<br>Huntington, Utah 84528 | Dick N. & Quinevere A. Nielson<br>c/o Kristie N. Ligon<br>4819 Mandel Str.<br>Houston, Texas 77006 |
| Ina Lee J. Magnuson<br>495 North 100 East<br>Castle Dale, Utah 84513<br>(Surface) | Scott N. & Laural S. Johansen<br>P.O. Box 1099<br>Castle Dale, Utah 84513 |
| Karl A. Seely<br>P.O. Box 934<br>Castle Dale, Utah 84513 | Lavar J. & Phyllis G. Jensen Trustees<br>P.O. Box 207<br>Elmo, Utah 84521 |
| Johansen Herefords LLC<br>P.O. Box 48<br>Castle Dale, Utah 84513 | Fossil Rock Resources LLC<br>6100 Dutchmans Lane, 9th Floor<br>Lousiville, Kentucky 40205 |

R645-301-112.700: MSHA Numbers of Mine Structures

See Section R645-301-112.400: Identification Names, Numbers, and Dates of Issuance for MSHA mine numbers of each individual mine. MSHA numbers for structures are as follows:

**Cottonwood/Wilberg Mine**

North Sediment Pond - UT09-01944-12 (Records Abandoned by MSHA August 5, 2016)

South Sediment Pond - UT09-01944-13 (Records Abandoned by MSHA August 5, 2016)

~~**Deer Creek Mine**~~

~~Waste Rock Site - 1211-UT-09-00121-02~~

R645-301-112.800: Statement of all Lands Contiguous to the Permit Area

The Applicant is the owner of fee surface and coal rights and the holder of leases contiguous to the permit area and related to the Cottonwood/Wilberg Coal Mine and Deer Creek Coal Mine.

To the best of applicant's knowledge there are no holders of record of any leasehold interest in areas to be affected by surface operations of facilities or coal mined other than oil and gas leases and grazing permits.

To the best of applicant's knowledge there are no purchasers of record under a real estate contract of areas to be affected by surface operations and facilities or coal to be mined.

R645-301-113: Violation Information

The applicant has never had a federal or state mining permit suspended or revoked nor forfeited a mining bond or similar security deposited in lieu of bond.

R645-301-113.300: Notice of Violation Received by Applicant

See Appendix D for current NOV list.

R645-301-114: Right of Entry Information (Surface)

The following State and Federal agreements upon which PacifiCorp bases its right to perform coal mining and reclamation operations have all been assigned to PacifiCorp.

**Surface Right of Entry Information*:**

| Permit/Grant/Lease | Acreage | Date Issued | Permitted Use | Description |
|---|---|---|---|---|
| **Cottonwood/Wilberg Mine** | | | | |
| Forest Service Special Use Permit | 4.78 acres | 11/6/86 | Sediment ponds and soil storage | **T17S, R7E, S.L.B.&M**<br>Part of the SW¼NE¼ of Section 27 |

| Permit/Grant/Lease | Acreage | Date Issued | Permitted Use | Description |
|---|---|---|---|---|
| Forest Service Special Use Permit | 1.3 acres | 11/9/76 | 8" waste water pipeline | **T17S, R7E, S.L.B.&M** Sec. 26 and Sec 27 |
| BLM Right of Way U-37641 | 3.7 acres | 8/31/77 | Sewer line and absorption field | **T17S, R7E, S.L.B.&M** Beginning S 52˚06'48" W, 1664.59 ft. from the Sec. corners of 34, 27, 26, and 35, |
| thence, S 15˚23'50" E, 193.05 feet; thence,N 9˚13'28" W, 354.72 feet; thence,N 14˚04'20" W, 185.61 feet; thence,N 29˚53'51" E, 488.38 feet; thence,N 00˚47'31" E, 474.97 feet; thence,E, 30 feet; thence,S 00˚47'31" W, 421.50 feet; thence,S 04˚55'10" E, 598.80 feet, to the point of beginning. Said parcel contains 3.70 acres more or less. | | | | |
| BLM Right of Way U-37642 | 1.86 acres | | Rock and Soil Storage Area | **T17S, R7E, S.L.B.&M** |
| Beginning at a point S08°10,26"E, 758.72 feet from the east 1/4 corner of section 34, T. 17S., R.7E., SLB&M; thence, S46°00'31"W, 377.65 feet; thence, N45°52'24"W, 139.17 feet; thence, N32°54'05"W, 74.56 feet; thence, N23°41'14"E, 40.14 feet; thence, N50°27'20"E, 295.51 feet; thence, N69°41'04"E, 36.66 feet; thence, S44°45'52"E,189.90 feet to the point of beginning. Said parcel contains 1.86 acres more or less. | | | | |
| **Deer Creek Mine** | | | | |
| Forest Service Special Use Permit | 5.85 acres | 3/7/79 | Mine Parking and storage yard | **T17S, R7E, S.L.B.&M** Beginning on E1/4 corner of Section 10; thence N 300'; thence W 850'; thence S 300'; thence E 850' to the point of beginning. |
| BLM Right of Way U-52401 | 1.84 acres | 12/16/06 | Overland Coal Conveyor | **T17S, R7E, S.L.B.&M** Sec 2: Portions of SE¼SE¼SW¼ |
| Special Use Lease Agreement #1382 | 160 acres | 8/1/2002 | Overland Coal Conveyor | **T17S, R7E, S.L.B.&M** Sec 2: SE¼ |
| PacifiCorp Private Land | 5.6 acres | | C2 Beltline | **T17S, R7E, S.L.B.&M** |
| Beginning at a point S 0˚22' E,142.4 feet from the SW corner of NW¼ of Section 1, T17S, R7E, SLB&M; thence, N 49˚53'23" E, 2395.4 feet; thence, S 40˚10'42" E, 101.94 feet; thence, S 49˚52'03" W, 2481.12 feet; thence, N 0˚22' W, 276.25 feet to the point of beginning. 5.6 acres more or less. | | | | |
| Utah Department of Transportation (pipeline corridor along SR 31 in Huntington Canyon) – Refer to Statewide Utility License Agreement and Bond in Appendix B. | | | | |
| Emery County Road Department (pipeline corridor along EC #306 in Rilda Canyon) – Refer to Road Encroachment Permit, Special Utility License Agreement, and Bond in Appendix B. | | | | |

*Also see **R645-301-112.500/R645-301-114** for detailed underground right of entry information:

## R645-301-115: Status of Unsuitability Claims

In consultation with concerned federal land agencies and the Division of Oil, Gas and Mining, no lands within or adjacent to the permit area have been identified as qualifying under R645-103-300 as areas unsuitable for surface effects of underground coal mining activities.

References:

Land Management Plan
Ferron-Price Planning Unit
Manti-LaSal National Forest

Division of Oil, Gas, and Mining
Salt Lake City, Utah

US Forest Service
Manti-LaSal National Forest
Ferron, Utah

Bureau of Land Management
Price, Utah

No other facilities or operations will be conducted within 300 feet of an occupied dwelling.

R645-301-116: Permit Term

Each respective mine's permit are for a five (5) year permit term; however, schedules for mining coal are included in the mining plan narrative and are tabulated for the life of the lease.

R645-301-117.100: Certificate of Liability

The liability insurance coverage required is provided by a policy issued to applicant. Applicant will insure that such insurance coverage is maintained in "full force" and effect during the life of the permit and through completion of reclamation, or will provide evidence that the self-insurance requirements of R645-301-890.100 have been satisfied by it. See Appendix E for certificates of liability.

R645-301-117.200: Proof of Publication

See Appendix F for publication proof of permit applications.

Miscellaneous

For mine permit boundary descriptions and acreage's see Appendix G.

For information relating to partial relinquishment of the permit areas, see Supplemental Volume 1 pertaining to lease relinquishment. This volume includes subsidence and drill hole information, as well as, an informational assessment of the hydrological and biological systems of East Mountain.

# PacifiCorp

# Deer Creek Mine

# C/015/0018

**Amendment to Add a Post-Mining Water Discharge at Rilda Canyon Portals, Permit Area Change to Include Discharge Pipeline Route and Potential Treatment Facility Area, PacifiCorp, Deer Creek Mine, C/015/0018, Emery County, Utah**

**<u>Legal and Financial Volume, Appendix B</u>**

**Insert into Legal and Financial Volume, add to Appendix B**

# PacifiCorp

# Deer Creek Mine

# C/015/0018

## Amendment to Increase the Permit Boundary for the Installation of a Water Discharge Pipeline from Rilda Canyon Portals to Huntington Plant

## Insert into Legal and Financial Volume, Appendix B

T-226(6/97)

# UTAH DEPARTMENT OF TRANSPORTATION
# PERMIT

**ENCROACHMENT PERMIT:** App ID: 72626 Activity: Function: 4902

**Region 4**

**R4-164902-1**

Date: **11/8/2016**

**Application of:** PacifiCorp
**By:** Shawn Graff Work:(801) 220-4043
**Address:** 1407 W North Temple Unknown, UK Work:(801) 220-4043
**Subcontractor** tbd

is hereby granted subject to: Utah Depart Transportation's (UDOT's) Regulations For the Accommodation of Utilities on Federal Aid and Non Federal-Aid Highway Right-of-Way, Regulations for the Control and Protection of State Highway Rights of Way, Standard Specifications for Road and Bridge Construction, UDOT Specifications for Excavation of State Highway, State Occupational Safety and Health Laws, Manual on Uniform Traffic Control Devices, Instructions to Flaggers, the approved plans, and any special limitations set forth herein, permission for the purpose of **Water pipeline from Rilda Canyon to Huntington Power Plant (as per Shawn Graff this permit has been extended)** within the right of way limits in the following locations: **SR 31 in sections 22, 23, 26, 27, 35 and 36, T16S, R7E, SLM**.

| | | | | | |
|---|---|---|---|---|---|
| Highway 0031 | Milepost | 36.8410 | to | | in/near OUTSIDE CITY LIMITS, EMERY county |
| Highway 0031 | Milepost | 36.8210 | to | 42.4070 | in/near OUTSIDE CITY LIMITS, EMERY county |

A permit fee of $500.00 has been received.

The permitted work shall commence **8/1/2016** and shall be diligently prosecuted to completion. The work shall be completed and all disturbed surfaces or objects restored on or before **5/31/2017**. In the event work is commenced under this Permit and the permittee fails or refuses to complete the work, UDOT may, at its election, correct any deficiencies or otherwise complete the permitted work at the expense of the permittee. Upon receipt of an invoice of the costs incured by UDOT, permitte shall immediately pay the amount due. If an action is required to be filed in court to collect the amount due, permittee shall be liable for UDOT's costs and fees, including attorney's fees.

Before work permitted is commenced, the permittee shall notify Station Supervisor (Listed below).. By applying for the Permit and UDOT issuing the Permit, permittee will comply with all instructions, conditions, requirements, and regulations of UDOT with respect to performance of the work described in the Permit. Permittee will properly control and warn the public of said work withit UDOT's rights-of-way to prevent any accidents. Permittee shall defend, indemnify, and hold harmless UDOT from all damages or claims, including attorneys fees, arising out of any and all actions performed under this Permit by permittee, permittee's employees, agents or contractors, incuding failure to comply with terms and conditions in this Permit. Permittee shall pay for UDOT's inspections fees.

Permittee shall execute a bond in the minimum amount of $100,000.00, as determined by the Regional Director/District Engineer, to insure faithful performance of the permittee's obligation. The bond shall remain in force for three years after completion of work.

Permittee shall hold an insurance policy in the amount of $3,000,000.00, as determined by the Regional Director/District Engineer.

Permittee shall not perform any work on state highway rights-of-way beyond those areas of operation described on this Permit.

If permittee fails to comply with UDOT's regulations, specifications, or instructions pertinent to this Permit, the Region Director/District Engineer or his duly authorized representative, may by verbal order, suspend the work until the violation is corrected. If permittee fails or refuses to promptly comply, the Region Director/District Engineer or his authorized representative may issue a written order stopping all or any part of the work. When satisfactory corrective action is taken, an order permitting resumption of work may be issued.

****** 24 Hours before starting work, call Kurt McFarlane at (435) 650-1156 ******

**Special Limitations:**

- Use current edition of UDOT standard drawing for traffic control. Use Utah MUTCD stardards for traffic control elements not shown in UDOT standard drawings. Traffic control must be posted at the encroachment site for entire encroachment period.
- Traffic Control Plans, signs and channelizing devices must conform to MUTCD Standards, as a minimum, and all signs must be equipped with three orange flags.
- This agreement and/or permit is UDOT approval only. You are responsible to obtain clearances from railroads, private property owners and local jurisdictions that you are working within.
- ANSI 107-2004 Class II clothing (or greater) is required of all workers within the right-of-way.
- ATSSA Certified Traffic Control Maintainer required.
- If a historic, archeological, or paleontological item is encountered, construction shall be immediately stopped and UDOT notified.
- Minimum 3' Flowable Fill is required under pavement. Saw cut and tack coat joints. Replace asphalt to the existing depth or 7 " minimum (6" minimum plus 1").
- Untreated Base Course with 97% compaction for the full depth of the trench with 6" lifts.
- An inspector may be required at permittee's expense, with 48 hours notice. By accepting this permit, I agree to pay for inspection fees.
- Licensee shall keep highway free of mud and debris. A sweeper broom must be accessible for cleaning purposes.
- No storage of backfill material or pipe will be allowed within the ASHTO Clear Zone. Excavations must be backfilled daily or barrier will be required.
- By the accepting this permit, the Applicant acknowledges the hazardous nature of the work and agrees to assume full responsibility in the event of an accident or other incident involving death or injury to members of the Permitess Group or others, or property damage that results from negligence or intentional conduct on the part of any member of the group.

# UTAH DEPARTMENT OF TRANSPORTATION
# PERMIT

- Minimum depth of 5' required.

By carrying out the activities allowed by this permit it is conclusive evidence that I have accepted all provisions, limitations, and restrictions of the permit and attachments, understand and agree to all penalties for failing to comply with them, and understand my ability to review a permit and applicable attachments at the appropriate region/district office.

**Approved By:**

**Authorizing Name (printed):** **Kurt McFarlane**

Kurt McFarlane

(for Region Director/District Engineer)

Contract #168946

**PACIFICORP**
**1407 WEST NORTH TEMPLE**
**SALT LAKE CITY, UT 84116**

Federal ID No. **93-0246090**

## STATEWIDE UTILITY LICENSE AGREEMENT

## NONINTERSTATE

**THIS AGREEMENT made and entered into this 18 day of May, 2016, by and between the UTAH DEPARTMENT OF TRANSPORTATION, hereinafter referred to as "UDOT" and PACIFICORP, an Oregon corporation, hereinafter referred to as the "COMPANY".**

## RECITALS:

**WHEREAS,** the parties desire to assist in expediting the approval of UDOT permits for operating, constructing and maintaining utility lines and related facilities ("facilities") within state highway rights of way; and excluding longitudinal installations within the interstate highway rights of way; and

**WHEREAS**, the terms of this agreement shall apply to all permits issued to allow access onto state highway rights of way; and

**WHEREAS**, this agreement shall apply to approved location and construction permits on state highway rights of way in the State of Utah which are within the responsibility and jurisdiction of **UDOT**; and

**WHEREAS**, the parties desire that this agreement supersedes all previous utility license agreements executed between the two parties

**NOW THEREFORE**, In consideration of the promises and mutual covenants and agreements contained herein, said parties hereby covenant and agree as follows:

**(1)** **UDOT AGREEMENT TO REVIEW APPLICATIONS:** This agreement is not a permit or a guarantee of a permit. However, **UDOT** agrees to promptly review any application for a permit that **COMPANY** files pursuant to the procedures established in this agreement and Utah Administrative Code R930-7. **COMPANY** and **UDOT** agree to work together in good faith to reach a mutually beneficial decision on any permit application.

**(2) APPROVAL:** Unless otherwise stated herein, or in any particular permit or agreement, all permits executed pursuant hereto will be deemed to be governed by the provisions of this agreement. Permit applications shall be presented to the appropriate **UDOT** Region/District Permits Office which shall have the authority to issue. All previous and future permits are subject to the requirements of R930-7 in effect at the time the encroachment permit was issued. **UDOT** may apply special limitations or requirements, including timing constraints, for any work within the right of way. The issuance and approval of a permit enables the **COMPANY** to proceed with the work and permitted use in accordance with the terms of the permit.

**(3) RESERVATION AND SPECIAL PROVISIONS:** **UDOT** reserves the right to require an agreement or specific permit for any particular location and construction. Special provisions, as particular circumstances may dictate and as required by **UDOT** may be incorporated into any permit issued after this agreement is executed.

**(4) INSPECTION:** **UDOT** may perform routine inspection of utility construction work to monitor compliance with the license agreement, encroachment permit and with state and federal regulations. **UDOT**'s inspection does not relieve the **COMPANY** of its responsibilities in meeting the permit conditions and **UDOT**'s specifications. The **COMPANY** is responsible for **UDOT**'s inspection costs.

**(5) COSTS:** The **COMPANY** shall pay the entire cost of the facilities installation unless **UDOT**'s highway project causes the relocation of the utility facilities.

**(6) BEGINNING CONSTRUCTION:** The **COMPANY** shall not begin any work on **UDOT** right of way until **UDOT** issues the permit. Once the **COMPANY** receives a permit from UDOT, the **COMPANY** shall complete construction in accordance with the permit requirements.

**(7) TRAFFIC CONTROL:** On heavily traveled highways, utility operations interfering with traffic shall not be conducted during periods of peak traffic flow. This work shall be performed to minimize closures of intersecting streets, road approaches, or other access points. The **COMPANY** shall submit in advance traffic control plans showing detours and signing operations to allow **UDOT** reasonable time to review the plans. The **COMPANY** shall not perform full or partial lane closure without prior approval of **UDOT** Region/District Director or authorized representative. The **COMPANY** shall conform to **UDOT** approved traffic control plans and permit conditions.

**(8) EXCAVATION, BACKFILL, COMPACTION, AND SITE RESTORATION:** The **COMPANY** shall perform all work on **UDOT** right-of-way in compliance with R930-7, current **UDOT** Standard Specifications for Highway and Bridge Construction, **UDOT** Permit Excavation Handbook, and all applicable state and federal environmental laws and regulations.

**(9) EMERGENCY WORK:** Emergency work may be done without prior permit if imminent danger of loss of life or significant damage to property exists. In emergency work situations where traffic lanes will be partially or fully blocked, the **COMPANY** or its representative will contact the UDOT Traffic Operations Center (801) 887-3700 prior to establishing traffic control, and on the first business day after the emergency complete a formal permit application. Failure to contact UDOT for an emergency work situation and obtain an encroachment permit within the stated time period may

be considered to be a violation of the terms and conditions of this agreement and R930-7. At the discretion of the **COMPANY**, emergency work may be performed by a bonded contractor, public agency, or a utility company. In all cases the **COMPANY** shall comply with the State Law requiring notification of all utility owners prior to excavation. None of the provisions of this agreement are waived for emergency work except for the requirement of a prior permit.

**(10) RESTORATION OF TRAFFIC SIGNAL EQUIPMENT:** Any traffic signal equipment or facilities which are disturbed or relocated as a result of the **COMPANY's** work must be restored in accordance with plans approved by **UDOT**. Restoration of traffic signal equipment must be done at the **COMPANY's** expense by a qualified electrical contractor experienced in signal installation, retained by the **COMPANY** and approved in advance by **UDOT**. Work shall be scheduled to ensure that disruption of any traffic signal operation is kept to a minimum.

**(11) MAINTENANCE:** The facilities shall at all times be maintained, repaired, constructed and operated by and at the expense of the **COMPANY**. The facilities will be serviced without access from any interstate highway or ramp. If the **COMPANY** fails to maintain the facilities, **UDOT** may notify the **COMPANY** of any maintenance needs. If the COMPANY receives notification of any maintenance requirements, the **COMPANY** shall perform the needed maintenance.

**(12) LIABILITY:** Pursuant to R930-7-6(2)(b), the **COMPANY** is required to post a continuous bond in the amount of $100,000 to guarantee satisfactory performance under this agreement. **UDOT** may proceed against said bond to recover all actual expenses incurred by **UDOT**, its employees or contractors in repairing the sections of roadway damaged by the **COMPANY**, including the failure to restore the right of way to **UDOT** standards. The liability of the **COMPANY** shall not be limited to the amount of the bond. In the event claims exceed the amount of the bond, **UDOT** may only claim the $100,000 maximum amount against the bond; however, the **COMPANY** shall be liable for any amounts exceeding the limits of the bond, but only to the extent the **COMPANY** may be liable for such claims under this agreement. The **COMPANY** shall notify **UDOT** immediately in writing at the following address if this bond is planned to be terminated or is terminated:

Statewide Utilities Engineer
Utah Department of Transportation
4501 South 2700 West
PO Box 148380
Salt Lake City, Utah 84114-8380

Failure to maintain the required bond is cause for termination of this agreement and cancellation of any permits.

Pursuant to R930-7-6(6)(b) **UDOT** may require a performance and warranty bond from the **COMPANY** for permits issued under this agreement. The amount of the bond, not less than $10,000, will be set according to the permitted scope of work. If a bond is required, **UDOT** may proceed against the bond to recover all expenses incurred by **UDOT**, its employees or contractors to restore to **UDOT** standards the sections of roadway not completed or damaged by the **COMPANY**. The liability of the **COMPANY** shall not be limited to the amount of the bond.

The **COMPANY** will indemnify, defend, and hold harmless **UDOT**, its employees, and the State of Utah from responsibility for any damage or liability arising from **COMPANY**'s construction, maintenance, repair, or any other related operation during the work or as a result of the work pursuant to permits issued under this agreement except for the extent of UDOT's or its agents' or contractors' negligence.

**(13) CANCELLATION OF PERMITS:** Any failure on the part of **COMPANY** to comply with the terms and conditions set forth in the license agreement or the encroachment permit may result in cancellation of the encroachment permit and license agreement. The failure of the **COMPANY** to pay any sum of money for actual costs incurred by **UDOT** in association with its review or inspection of the utility facilities may also result in cancellation of the encroachment permit. Prior to any cancellation, **UDOT** shall notify the **COMPANY** in writing, setting forth the violations, and will provide the **COMPANY** a reasonable time to correct the violations to the satisfaction of **UDOT**. If the encroachment permit is cancelled because of the **COMPANY**'s noncompliance with the permit, then the COMPANY shall remove its utility facility that was allowed to be installed by the permit.

**(14) ASSIGNMENT:** The license agreement shall not be assigned. Any new entity is required to sign a license agreement. The permits maybe assigned with the prior written consent of **UDOT,** which shall not be unreasonably withheld.

**(15) SUCCESSORS AND ASSIGNS:** All covenants and agreements herein contained shall be binding upon the parties, their successors and assigns.

**(16) UDOT MAINTENANCE OPERATIONS:** Pursuant to R930-7-8, Underground facilities must be buried to the proper depth as required by the rule in effect at the time the underground facilities were installed to avoid conflict with **UDOT's** normal and routine maintenance activities. In entering into this agreement with **UDOT** and obtaining a permit for the work, the **COMPANY** agrees to avoid such conflicts by placing its facilities in compliance with the required horizontal clearance, vertical clearance and minimum depth of bury. Normal maintenance operations are those not requiring excavations in excess of the minimum horizontal clearance and depth of bury.

In all cases the **COMPANY** shall protect, indemnify and hold harmless **UDOT**, its employees, and the State of Utah for damages because of the failure of the facilities to meet the horizontal or vertical clearances. Any noncompliance to the above requirements may result in cancellation of the **COMPANY's** permit. If the noncompliant facilities need to be moved due to a **UDOT** project, the **COMPANY** must pay 100% of the relocation costs if the facilities were installed in violation of **UDOT**'s required clearances. If the **COMPANY** is found to be in violation of its permit with respect to vertical or horizontal location, such violation may also result in cancellation of its permit.

**(17) TERMINATION OF LICENSE AGREEMENT:** This agreement may be terminated at any time by either party upon 30 days advance written notice to the other. Active permits previously issued and approved under a terminated agreement are not affected and remain in effect on the same terms and conditions set forth in the agreement, permits and R930-7. The obligation to maintain the continuous bond as described in paragraph (12) above continues until **COMPANY's** facilities are removed from **UDOT's** right-of-way. The indemnification obligations in this agreement shall survive termination of the agreement.

**(18) MISCELLANEOUS:**

A. Any changes to this agreement must be in writing and signed by both parties.

B. The failure of either party to insist upon strict compliance of any of the terms and conditions, or failure or delay by either party to exercise any rights or remedies provided in this agreement, or by law, will not release either party from any obligations arising under this agreement.

C. Each party represents that it has the authority to enter into this agreement.

D. This agreement shall be governed by and construed in accordance with the laws of Utah. In the event of a dispute, the venue shall be the Third District Court, Salt Lake County, Utah.

E. If any provision or part of a provision of this agreement is held invalid, illegal or unenforceable in any respect, such invalidity, illegality or unenforceability shall not affect any other provision. Each provision shall be deemed to be enforceable to the fullest extent under applicable law.

F. To the fullest extent permitted by law, each of the parties waives any right to may have to a trial by jury in respect of litigation directly or indirectly arising out of, under, or in connection to this agreement. Each party further waives any right to consolidate any action in which a jury trial has been waived with other action in which a jury trial cannot be or has not been waived.

udot.utah.gov

Approved by PACIFICORP, an Oregon corporation

By: _____ 5-12-16
Signature Date

PAUL RADAKOVICH VP, OPERATIONS
Name (printed) Title

**FOR THE UTAH DEPARTMENT OF TRANSPORTATION**

By: _____ 17 May 2016
Richard Manser, P.E. Date
**UDOT** Statewide Utilities Engineer

APPROVED AS TO FORM: This Form Agreement has been previously approved as to form by the office of the Legal Counsel for the Utah Department of Transportation.

udot.utah.gov

*Risk & Insurance Management*

*1407 West North Temple, Suite 320*
*Salt Lake City, UT 84116*
*Office (801) 220-2996*

PACIFICORP

February 12, 2016

Rod McDaniels
Statewide Permits Officer
Utah Department of Transportation
4501 South 2700 West
PO Box 148420
Salt Lake City, UT 84114-8420

RE: PacifiCorp dba Rocky Mountain Power
Statewide Performance and Warranty Bond

Dear Mr. McDaniels,

Please find enclosed the newly executed Statewide Performance and Warranty Bond to cover multiple encroachments using your new form date April 30, 2015.

If you have any questions please do not hesitate to contact me.

Thank you,

Margaret M Reed

Margaret M Reed
Insurance Administrator
margaretreed@pacifiCorp.com

Enclosure

**TO COVER MULTIPLE ENCROACHMENTS ON PROPERTY AND RIGHT-OF-WAY BELONGING TO THE UTAH DEPARTMENT OF TRANSPORTATION PER R930-7-6(6)(b)(ii)**

B--SUR--1146

| Bond Number | 105739700 |
|---|---|

KNOW ALL MEN BY THESE PRESENTS:

That we PacifiCorp dba Rocky Mountain Power Mailing address: 1407 West North Temple, Salt Lake City, UT 84116 Phone: 801-220-2996 as Principal, and Travelers Casualty and Surety Company of America as Surety, being duly authorized to transact business in the State of Utah, are held and firmly bound unto the UTAH DEPARTMENT OF TRANSPORTATION, as Obligee, the full sum of $100,000.00. For the payment of which, well and truly to be made, we bind ourselves, our heirs, executors, administrators, successors and assign, jointly and severally, firmly by these presents.

The Principal has obtained or is about to obtain from Utah Department of Transportation an encroachment permit(s) to perform work on, about, below or adjacent to a highway as specified in the permit(s), which is incorporated into this bond by reference.

The Principal is required to guarantee the completion of the permitted work, proper restoration and replacement of the state right-of-way to the extent the Principal causes any damage to the right-of-way, including but not limited to, roads, ditches, bridges, culverts and other appurtenances that the Principal utilized or impacted during the permitted work and warranty the permitted work for *a period of three (3) years* from the date of completion of the permitted work.

The Principal has agreed to comply with the rules, regulations, condition and restrictions stated in the permit(s).

If the Principal fails to complete the required work described in the permit, damages state right-of-way, including appurtenances and/or fails to perform the permitted work according to the applicable standards and specifications, including the conditions and limitations in the permit(s), it will be the responsibility of the Surety to arrange for the completion of all necessary work as required by the permit(s) and the Utah Department of Transportation.

As a part of the obligation secured hereby and in addition to the face amount specified, there shall be included costs and reasonable expenses and fees including enforcing such obligation, all to be taxed as costs and included in any judgment rendered.

This bond shall be deemed continuous in form and shall remain in full force and effect for any work performed by permit before this bond is terminated. This bond may be canceled by the Surety by giving thirty (30) days notice in writing to the Utah Department of Transportation care of the Statewide Permits Office at 4501 South 2700 West, PO Box 148420, Salt Lake City, UT 84114-8420 by certified mail at least thirty (30) days prior to the termination date specified in such notice and upon giving such notice, the Surety shall not have any liability under this bond for work

performed after such termination d

The Surety's aggregate liability shall not be more than the penal sum of this Bond.

IN WITNESS WHEREOF, the parties have set their hands and seals this 19th day of December 2015.

PacifiCorp DBA Rocky Mountain Power
Principal

Principal Seal

By: Bret W Reich
Bret W Reich

Title: VP + General Counsel

Date: February 12, 2016

Travelers Casualty and Surety Company of America
Surety

Surety Seal

By: Claudia A. Rathbun

Title: Claudia A. Rathbun, Attorney-in-Fact

Date: December 19, 2015

STATE OF UTAH
COUNTY OF SALT LAKE

Claudia A. Rathbun being first duly sworn, an oath, DEPOSES AND SAYS: that (s)he is Attorney-in-Fact of Travelers Casualty and Surety Company of America the Surety of the foregoing bond, and that (s)he is authorized to execute and deliver the foregoing obligation; that said Company is authorized to execute the same, and has complied in all respects with the laws of Utah in reference to begin sole surety upon bonds, undertakings and obligations.

One Tower Square, H.O. Box 15CZ, Hartford, Connecticut 06183 860/277-1561.

MAILING ADDRESS OF SURETY COMPANY PHONE OF SURETY COMPANY

Claudia A. Rathbun
Signed

Subscribed and sworn to me before this 19th day of December, 2015.

GENERAL NOTARY - State of Nebraska
LISA FINNELL
My Comm. Exp. June 26, 2018

Lisa Finnell

TRAVELERS

# POWER OF ATTORNEY

Farmington Casualty Company
Fidelity and Guaranty Insurance Company
Fidelity and Guaranty Insurance Underwriters, Inc.
St. Paul Fire and Marine Insurance Company
St. Paul Guardian Insurance Company

St. Paul Mercury Insurance Company
Travelers Casualty and Surety Company
Travelers Casualty and Surety Company of America
United States Fidelity and Guaranty Company

Attorney-In Fact No. 227594

Certificate No. 006384371

**KNOW ALL MEN BY THESE PRESENTS:** That Farmington Casualty Company, St. Paul Fire and Marine Insurance Company, St. Paul Guardian Insurance Company, St. Paul Mercury Insurance Company, Travelers Casualty and Surety Company, Travelers Casualty and Surety Company of America, and United States Fidelity and Guaranty Company are corporations duly organized under the laws of the State of Connecticut, that Fidelity and Guaranty Insurance Company is a corporation duly organized under the laws of the State of Iowa, and that Fidelity and Guaranty Insurance Underwriters, Inc., is a corporation duly organized under the laws of the State of Wisconsin (herein collectively called the "Companies"), and that the Companies do hereby make, constitute and appoint

John D. Diesing Jr., James L. Arts, David B. McCue, Claudia A. Rathbun, Elizabeth D. Hudson, Jane A. Ely, Gary L. Wagner, and Shawn P. Stone

of the City of Omaha, State of Nebraska, their true and lawful Attorney(s)-in-Fact, each in their separate capacity if more than one is named above, to sign, execute, seal and acknowledge any and all bonds, recognizances, conditional undertakings and other writings obligatory in the nature thereof on behalf of the Companies in their business of guaranteeing the fidelity of persons, guaranteeing the performance of contracts and executing or guaranteeing bonds and undertakings required or permitted in any actions or proceedings allowed by law.

WARNING: THIS POWER OF ATTORNEY IS INVALID WITHOUT THE RED BORDER

**IN WITNESS WHEREOF**, the Companies have caused this instrument to be signed and their corporate seals to be hereto affixed, this 15th day of May, 2015.

Farmington Casualty Company
Fidelity and Guaranty Insurance Company
Fidelity and Guaranty Insurance Underwriters, Inc.
St. Paul Fire and Marine Insurance Company
St. Paul Guardian Insurance Company

St. Paul Mercury Insurance Company
Travelers Casualty and Surety Company
Travelers Casualty and Surety Company of America
United States Fidelity and Guaranty Company

State of Connecticut
City of Hartford ss.

By: _____
Robert L. Raney, Senior Vice President

On this the 15th day of May, 2015, before me personally appeared Robert L. Raney, who acknowledged himself to be the Senior Vice President of Farmington Casualty Company, Fidelity and Guaranty Insurance Company, Fidelity and Guaranty Insurance Underwriters, Inc., St. Paul Fire and Marine Insurance Company, St. Paul Guardian Insurance Company, St. Paul Mercury Insurance Company, Travelers Casualty and Surety Company, Travelers Casualty and Surety Company of America, and United States Fidelity and Guaranty Company, and that he, as such, being authorized so to do, executed the foregoing instrument for the purposes therein contained by signing on behalf of the corporations by himself as a duly authorized officer.

**In Witness Whereof,** I hereunto set my hand and official seal.
My Commission expires the 30th day of June, 2016.

Marie C. Tetreault, Notary Public

58440-8-12 Printed in U.S.A.

This Power of Attorney is granted under and by the authority of the following resolutions adopted by the Boards of Directors of Farmington Casualty Company, Fidelity and Guaranty Insurance Company, Fidelity and Guaranty Insurance Underwriters, Inc., St. Paul Fire and Marine Insurance Company, St. Paul Guardian Insurance Company, St. Paul Mercury Insurance Company, Travelers Casualty and Surety Company, Travelers Casualty and Surety Company of America, and United States Fidelity and Guaranty Company, which resolutions are now in full force and effect, reading as follows:

**RESOLVED**, that the Chairman, the President, any Vice Chairman, any Executive Vice President, any Senior Vice President, any Vice President, any Second Vice President, the Treasurer, any Assistant Treasurer, the Corporate Secretary or any Assistant Secretary may appoint Attorneys-in-Fact and Agents to act for and on behalf of the Company and may give such appointee such authority as his or her certificate of authority may prescribe to sign with the Company's name and seal with the Company's seal bonds, recognizances, contracts of indemnity, and other writings obligatory in the nature of a bond, recognizance, or conditional undertaking, and any of said officers or the Board of Directors at any time may remove any such appointee and revoke the power given him or her; and it is

**FURTHER RESOLVED**, that the Chairman, the President, any Vice Chairman, any Executive Vice President, any Senior Vice President or any Vice President may delegate all or any part of the foregoing authority to one or more officers or employees of this Company, provided that each such delegation is in writing and a copy thereof is filed in the office of the Secretary; and it is

**FURTHER RESOLVED**, that any bond, recognizance, contract of indemnity, or writing obligatory in the nature of a bond, recognizance, or conditional undertaking shall be valid and binding upon the Company when (a) signed by the President, any Vice Chairman, any Executive Vice President, any Senior Vice President or any Vice President, any Second Vice President, the Treasurer, any Assistant Treasurer, the Corporate Secretary or any Assistant Secretary and duly attested and sealed with the Company's seal by a Secretary or Assistant Secretary; or (b) duly executed (under seal, if required) by one or more Attorneys-in-Fact and Agents pursuant to the power prescribed in his or her certificate or their certificates of authority or by one or more Company officers pursuant to a written delegation of authority; and it is

**FURTHER RESOLVED**, that the signature of each of the following officers: President, any Executive Vice President, any Senior Vice President, any Vice President, any Assistant Vice President, any Secretary, any Assistant Secretary, and the seal of the Company may be affixed by facsimile to any Power of Attorney or to any certificate relating thereto appointing Resident Vice Presidents, Resident Assistant Secretaries or Attorneys-in-Fact for purposes only of executing and attesting bonds and undertakings and other writings obligatory in the nature thereof, and any such Power of Attorney or certificate bearing such facsimile signature or facsimile seal shall be valid and binding upon the Company and any such power so executed and certified by such facsimile signature and facsimile seal shall be valid and binding on the Company in the future with respect to any bond or understanding to which it is attached.

I, Kevin E. Hughes, the undersigned, Assistant Secretary, of Farmington Casualty Company, Fidelity and Guaranty Insurance Company, Fidelity and Guaranty Insurance Underwriters, Inc., St. Paul Fire and Marine Insurance Company, St. Paul Guardian Insurance Company, St. Paul Mercury Insurance Company, Travelers Casualty and Surety Company, Travelers Casualty and Surety Company of America, and United States Fidelity and Guaranty Company do hereby certify that the above and foregoing is a true and correct copy of the Power of Attorney executed by said Companies, which is in full force and effect and has not been revoked.

WARNING: THIS POWER OF ATTORNEY IS INVALID WITHOUT THE RED BORDER

**IN TESTIMONY WHEREOF**, I have hereunto set my hand and affixed the seals of said Companies this 19th day of December, 2015

Kevin E. Hughes, Assistant Secretary

To verify the authenticity of this Power of Attorney, call 1-800-421-3880 or contact us at www.travelersbond.com. Please refer to the Attorney-In-Fact number, the above-named individuals and the details of the bond to which the power is attached.

Keeping Utah Moving

**Bond #** 106512523

# CONTINUOUS STATEWIDE UTILITY LICENSE AGREEMENT BOND

## *TO COVER THE PLACEMENT AND MAINTENANCE OF UTILITIES ON UTAH DEPARTMENT OF TRANSPORTATION'S PROPERTY AND RIGHT-OF-WAY*

KNOW ALL MEN BY THESE PRESENTS:

That we PacifiCorp

Mailing Address: 1407 West North Temple, Salt Lake City, UT 84116 Phone: 801-220-2996 as Principal, and Travelers Casualty and Surety Company of America as Surety, being duly authorized to transact business in the State of Utah, are held and firmly bound unto the UTAH DEPARTMENT OF TRANSPORTATION, as Obligee, the full sum of $100,000. For the payment of which, well and truly to be made, we bind ourselves, our heirs, executors, administrators, successors and assign, jointly and severally, firmly by these presents.

The Principal has entered into a utility license agreement with the Utah Department of Transportation for the purpose of constructing, locating and maintaining overhead and/or underground facilities and related appurtenances within the state highway rights-of-way in Utah, excluding the interstate highway rights-of-way as stated in the Statewide Utility License Agreement executed on the ____ day of _____ , _____.

The Principal is required to maintain this surety bond in perpetuity to guarantee the completion of the proper restoration and replacement of the state right-of-way to the extent the Principal or its utility facility causes any damage to the right-of-way, including but not limited to, roads, ditches, bridges, culverts and other appurtenances that the Principal utilizes or impacts.

The Principal has agreed to comply with the rules, regulations, condition and restrictions stated in the permit(s) issued by the Utah Department of Transportation.

If the Principal fails to complete the required work described in the permit(s), damages state right-of-way, including appurtenances and/or fails to perform the permitted work according to the applicable standards and specifications, including the conditions and limitations in the permit(s), it will be the responsibility of the Surety to arrange for the timely completion of all necessary work as required by the permit(s) and the Utah Department of Transportation.

As a part of the obligation secured hereby and in addition to the face amount specified, costs and reasonable expenses and fees including enforcing such obligation, shall be taxed as costs and included in any judgment rendered.

This bond shall be enforced for a continuous period. The Surety may terminate this bond upon giving the Utah Department of Transportation written notice by certified mail to the following address:

Utah Department of Transportation
Right-of-Way, Permits
4501 South 2700 West
PO Box 148420
Salt Lake City, Utah 84114-8420

The termination shall be effective ninety (90) days after the receipt of the notice by the Utah Department of Transportation.

IN WITNESS WHEREOF, the parties hereto have set their hands and seals the day and year first above written.

PacifiCorp
Principal

Principal Seal

By: Paul Radakovich

PAUL RADAKOVICH
PRINT NAME

Title: VP, OPERATIONS

Date: 5-16-16

Surety Seal

Travelers Casualty and Surety Company of America
Surety

By: Christina L. Sandoval

Christina L. Sandoval
PRINT NAME

Title: Attorney-in-Fact

Date: May 13, 2016

STATE OF: Illinois

COUNTY OF: Will

Christina L. Sandoval Being first duly sworn, an oath, DEPOSES AND SAYS: That he/she is Attorney-in-Fact of Travelers Casualty and Surety Company of America the Surety of the foregoing bond, and that he/she is authorized to execute and deliver the foregoing obligation; that said Company is authorized to execute the same, and has complied in all respects with the laws of Utah in reference to begin sole surety upon bonds, undertakings and obligations.

One Tower Square, Bond/5PB, Hartford, CT 06183

MAILING ADDRESS OF SURETY COMPANY

Phone: (203) 277-0111

PHONE OF SURETY COMPANY

Signed

Aaron D. Griffin

PRINT NAME

OFFICIAL SEAL
AARON D GRIFFIN
NOTARY PUBLIC, STATE OF ILLINOIS
MY COMMISSION EXPIRES 11/02/2019

Subscribed and sworn to me before this 13th day of May, 2016.

TRAVELERS

# POWER OF ATTORNEY

**Farmington Casualty Company**
**Fidelity and Guaranty Insurance Company**
**Fidelity and Guaranty Insurance Underwriters, Inc.**
**St. Paul Fire and Marine Insurance Company**
**St. Paul Guardian Insurance Company**
**St. Paul Mercury Insurance Company**
**Travelers Casualty and Surety Company**
**Travelers Casualty and Surety Company of America**
**United States Fidelity and Guaranty Company**

Attorney-In Fact No. 229936

Certificate No. 006441378

**KNOW ALL MEN BY THESE PRESENTS:** That Farmington Casualty Company, St. Paul Fire and Marine Insurance Company, St. Paul Guardian Insurance Company, St. Paul Mercury Insurance Company, Travelers Casualty and Surety Company, Travelers Casualty and Surety Company of America, and United States Fidelity and Guaranty Company are corporations duly organized under the laws of the State of Connecticut, that Fidelity and Guaranty Insurance Company is a corporation duly organized under the laws of the State of Iowa, and that Fidelity and Guaranty Insurance Underwriters, Inc., is a corporation duly organized under the laws of the State of Wisconsin (herein collectively called the "Companies"), and that the Companies do hereby make, constitute and appoint

Debra J. Doyle, Diane M. O'Leary, James B. McTaggart, Jennifer L. Jakaitis, Judith A. Lucky-Eftimov, Sandra M. Winsted, Sandra M. Nowak, Susan A. Welsh, and Christina L Sandoval

of the City of Chicago, State of Illinois, their true and lawful Attorney(s)-in-Fact, each in their separate capacity if more than one is named above, to sign, execute, seal and acknowledge any and all bonds, recognizances, conditional undertakings and other writings obligatory in the nature thereof on behalf of the Companies in their business of guaranteeing the fidelity of persons, guaranteeing the performance of contracts and executing or guaranteeing bonds and undertakings required or permitted in any actions or proceedings allowed by law.

**IN WITNESS WHEREOF**, the Companies have caused this instrument to be signed and their corporate seals to be hereto affixed, this 17th day of September, 2015.

**Farmington Casualty Company**
**Fidelity and Guaranty Insurance Company**
**Fidelity and Guaranty Insurance Underwriters, Inc.**
**St. Paul Fire and Marine Insurance Company**
**St. Paul Guardian Insurance Company**
**St. Paul Mercury Insurance Company**
**Travelers Casualty and Surety Company**
**Travelers Casualty and Surety Company of America**
**United States Fidelity and Guaranty Company**

State of Connecticut
City of Hartford ss.

By: _____
Robert L. Raney, Senior Vice President

On this the 17th day of September, 2015, before me personally appeared Robert L. Raney, who acknowledged himself to be the Senior Vice President of Farmington Casualty Company, Fidelity and Guaranty Insurance Company, Fidelity and Guaranty Insurance Underwriters, Inc., St. Paul Fire and Marine Insurance Company, St. Paul Guardian Insurance Company, St. Paul Mercury Insurance Company, Travelers Casualty and Surety Company, Travelers Casualty and Surety Company of America, and United States Fidelity and Guaranty Company, and that he, as such, being authorized so to do, executed the foregoing instrument for the purposes therein contained by signing on behalf of the corporations by himself as a duly authorized officer.

**In Witness Whereof,** I hereunto set my hand and official seal.
My Commission expires the 30th day of June, 2016.

Marie C. Tetreault, Notary Public

58440-8-12 Printed in U.S.A.

This Power of Attorney is granted under and by the authority of the following resolutions adopted by the Boards of Directors of Farmington Casualty Company, Fidelity and Guaranty Insurance Company, Fidelity and Guaranty Insurance Underwriters, Inc., St. Paul Fire and Marine Insurance Company, St. Paul Guardian Insurance Company, St. Paul Mercury Insurance Company, Travelers Casualty and Surety Company, Travelers Casualty and Surety Company of America, and United States Fidelity and Guaranty Company, which resolutions are now in full force and effect, reading as follows:

**RESOLVED**, that the Chairman, the President, any Vice Chairman, any Executive Vice President, any Senior Vice President, any Vice President, any Second Vice President, the Treasurer, any Assistant Treasurer, the Corporate Secretary or any Assistant Secretary may appoint Attorneys-in-Fact and Agents to act for and on behalf of the Company and may give such appointee such authority as his or her certificate of authority may prescribe to sign with the Company's name and seal with the Company's seal bonds, recognizances, contracts of indemnity, and other writings obligatory in the nature of a bond, recognizance, or conditional undertaking, and any of said officers or the Board of Directors at any time may remove any such appointee and revoke the power given him or her; and it is

**FURTHER RESOLVED**, that the Chairman, the President, any Vice Chairman, any Executive Vice President, any Senior Vice President or any Vice President may delegate all or any part of the foregoing authority to one or more officers or employees of this Company, provided that each such delegation is in writing and a copy thereof is filed in the office of the Secretary; and it is

**FURTHER RESOLVED**, that any bond, recognizance, contract of indemnity, or writing obligatory in the nature of a bond, recognizance, or conditional undertaking shall be valid and binding upon the Company when (a) signed by the President, any Vice Chairman, any Executive Vice President, any Senior Vice President or any Vice President, any Second Vice President, the Treasurer, any Assistant Treasurer, the Corporate Secretary or any Assistant Secretary and duly attested and sealed with the Company's seal by a Secretary or Assistant Secretary; or (b) duly executed (under seal, if required) by one or more Attorneys-in-Fact and Agents pursuant to the power prescribed in his or her certificate or their certificates of authority or by one or more Company officers pursuant to a written delegation of authority; and it is

**FURTHER RESOLVED**, that the signature of each of the following officers: President, any Executive Vice President, any Senior Vice President, any Vice President, any Assistant Vice President, any Secretary, any Assistant Secretary, and the seal of the Company may be affixed by facsimile to any Power of Attorney or to any certificate relating thereto appointing Resident Vice Presidents, Resident Assistant Secretaries or Attorneys-in-Fact for purposes only of executing and attesting bonds and undertakings and other writings obligatory in the nature thereof, and any such Power of Attorney or certificate bearing such facsimile signature or facsimile seal shall be valid and binding upon the Company and any such power so executed and certified by such facsimile signature and facsimile seal shall be valid and binding on the Company in the future with respect to any bond or understanding to which it is attached.

I, Kevin E. Hughes, the undersigned, Assistant Secretary, of Farmington Casualty Company, Fidelity and Guaranty Insurance Company, Fidelity and Guaranty Insurance Underwriters, Inc., St. Paul Fire and Marine Insurance Company, St. Paul Guardian Insurance Company, St. Paul Mercury Insurance Company, Travelers Casualty and Surety Company, Travelers Casualty and Surety Company of America, and United States Fidelity and Guaranty Company do hereby certify that the above and foregoing is a true and correct copy of the Power of Attorney executed by said Companies, which is in full force and effect and has not been revoked.

**IN TESTIMONY WHEREOF**, I have hereunto set my hand and affixed the seals of said Companies this 13th day of May, 2016.

Kevin E. Hughes, Assistant Secretary

To verify the authenticity of this Power of Attorney, call 1-800-421-3880 or contact us at www.travelersbond.com. Please refer to the Attorney-In-Fact number, the above-named individuals and the details of the bond to which the power is attached.

INTERWEST MINING COMPANY
A SUBSIDIARY OF PACIFICORP

Interwest Mining Company
Huntington Office
P. O. Box 310
15 North Main Street
Huntington, UT 84528

November 3, 2016

Wayde S. Nielsen
Supervisor
**Emery County Road Department**
P.O. Box 889
300 West SR29
Castle Dale, UT 84513

***RE: Road Encroachment Permit Application for Rilda Canyon Road No. 306, Emery County, Utah***

Dear Wayde:

As follow-up to our meeting on October 13, 2016, PacifiCorp, by and through its wholly-owned subsidiary Interwest Mining Company, as managing agent, hereby submits an application for an encroachment permit for Emery County Road #306 (E.C. #306). It is our understanding that the County owns the Rilda Canyon Road E.C. #306 under a judgment that was issued in 1935 and has the authority to issue the road encroachment permit.

The purpose of this application is to enable the construction activities associated with the installation of a 10 inch HDPE water pipeline within the existing Emery County rights-of-way for Road E.C. #306 from the intersection of State Highway 31 to the Rilda Canyon mine portal facilities. PacifiCorp is proposing to install the 10 inch HDPE water line and all related appurtenances along the side and within the existing county road from the Rilda Canyon mine portal facility to the Huntington Power Plant for consumption of residual mine water through the power plant operations.

Per our meeting, PacifiCorp will also provide surety performance bonds in favor of Emery

County for (1) the construction and installation activities of this water pipeline, and (2) the future maintenance of the water pipeline. It is our understanding that we will be posting these two separate surety bonds in the amount of $100,000 each. Upon your approval of the road encroachment permit, would you please provide us written confirmation of the bond amounts to enable us to secure the bonds from our surety.
Meanwhile, PacifiCorp is in the process of finalizing the few remaining permits for this overall project to enable construction as early as December 2016 with an anticipated completion by the end of April 2017.

Your assistance with this matter is greatly appreciated. Should you have any questions or need further information, please feel free to contact me at 435-687-4825 or Dennis.Oakley@PacifiCorp.com.

Sincerely,

Dennis Oakley
Sr. Mine Engineer

Enclosures

SMC\Interwest\EmeryCounty-RildaRoad306EncroachPermit(11-2-2016).doc

cc: IMC – C. Semborski, K. Fleck, S. Child w/copy encl.
PacifiCorp Fuel Resources – B. Morgan w/copy encl.

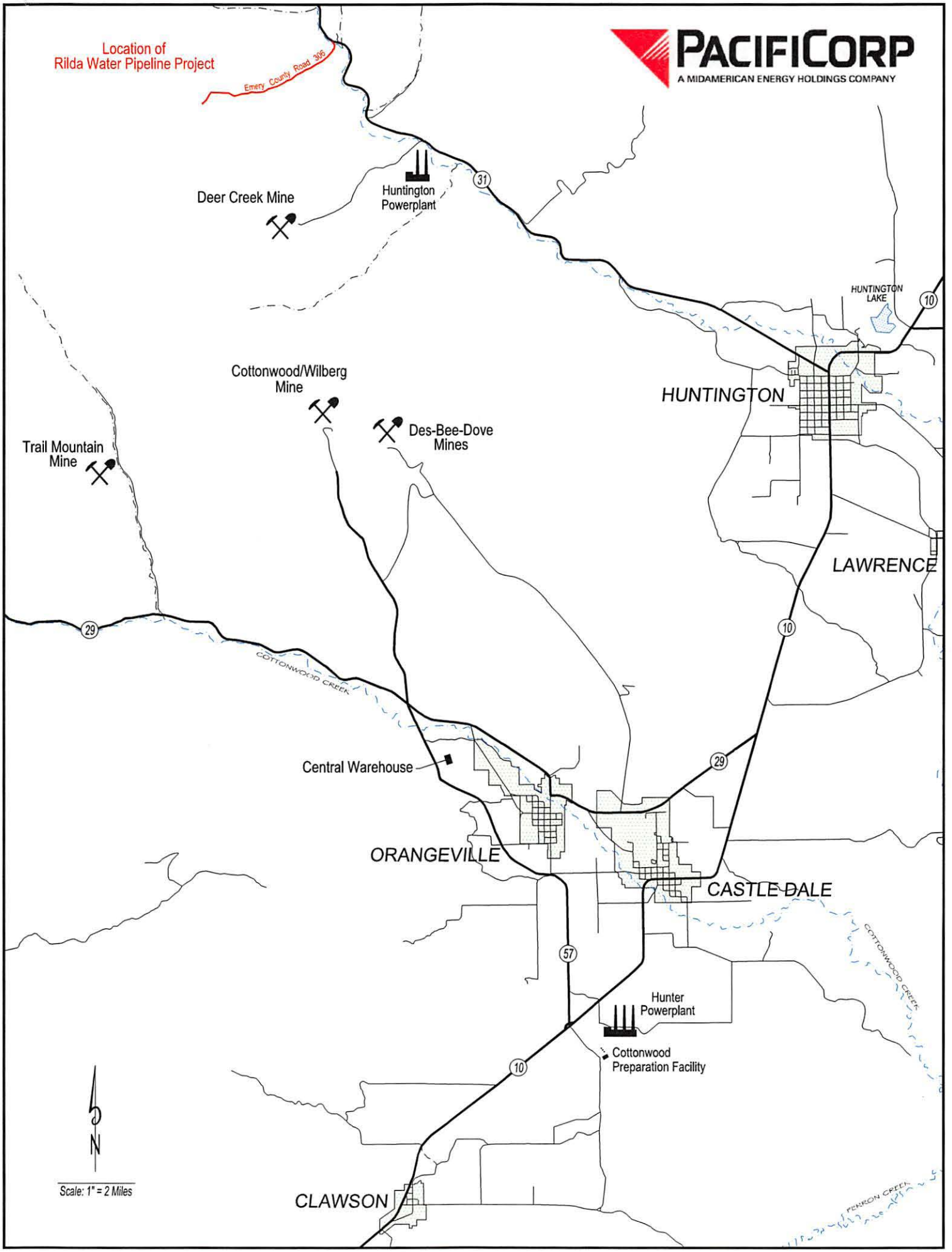
PACIFICORP
A MIDAMERICAN ENERGY HOLDINGS COMPANY
Location of
Rilda Water Pipeline Project
Emery County Road 306
Huntington
Powerplant
Deer Creek Mine
31
HUNTINGTON
LAKE
10
Cottonwood/Wilberg
Mine
HUNTINGTON
Des-Bee-Dove
Mines
Trail Mountain
Mine
LAWRENCE
29
10
COTTONWOOD CREEK
Central Warehouse
29
ORANGEVILLE
CASTLE DALE
57
COTTONWOOD CREEK
Hunter
Powerplant
Cottonwood
Preparation Facility
10
N
Scale: 1" = 2 Miles
CLAWSON
FERRON CREEK

ROADWAY ENCROACHMENT APPLICATION

Date: November 3, 2016

Applicant: PacifiCorp

Address: 15 North Main Street

City: Huntington State: Utah Zip: 84528

Phone: 435-687-4825 Email: Dennis.oakley@pacificorp.com

Purpose of application, explain in detail:
Install and bury a 10" HDPE pipe and all its appurtenances for mine water consumption at the Huntington Power Plant. Pipeline will be installed along the south side of EC #306, cross under road in two locations, and cross Huntington creek by means of the Rilda Canyon bridge crossing. Refer to attached design.

Plan for restoration of road/right of way, explain in detail:
If the asphalt surface, shoulder, signs, posts, culverts, etc. associated with EC #306 is damaged by construction, repairs shall be made as soon as practical and prior to contractor leaving the site. The quality of the repair shall be as good or better than original condition.

Plans for safety, traffic and dust control, explain in detail:
Construction contractor shall be required to prepare a written safety plan, spill prevention control and countermeasures plan, and a storm water pollution prevention plan. These plans will be required on site for inspection at all times. Because of the time of year, dust is not expected to be a problem.

Location of encroachment (enclose a map/sketch): See attached map/sketch.

County Road #: 306 Name of Road: Rilda Canyon Road

Date beginning Project: Approx. 12/1/16 Date of Project Completion: Approx. 4/30/17

Has Applicant acquired written permission from all agencies or property owners affected by this project?
Yes [X] No [ ] See attached statement.

The law requires that Blue Stakes be contacted (1-800-662-4111) before digging. Has Blue Stakes been contacted? Yes [ ] No [✓] Date Contacted: Blue stakes shall be contacted prior to start of project.

**Work cannot start until a permit is issued or other arrangements are made with the Emery County Road Supervisor.**

Applicant agrees to comply with all laws, ordinances and regulations of all governing agencies including but not limited to Emery County, as well as the instructions of the Emery County Road Supervisor or his indicated representative. It is the responsibility of the Applicant to contact and acquire written permission from the other agencies and property owners affected by Applicant's activities before commencing the project. All liability and restitution for damages will be the sole responsibility of the Applicant. A non refundable processing fee of $100.00 is tendered with this application. **Additional impact fees maybe required on certain classes of Permit.**

Wayde L Niels

Dennis Oakley - PacifiCorp

Applicant's Name (Print)

Dennis Oakley

Applicant's Signature

11/3/2016

Date

**Additional information from PacifiCorp:**

**Has Applicant acquired written permission from all agencies or property owners affected by this project?**

The County owns the Rilda Canyon Road (E.C. #306) under a judgment that was issued in 1935 and has the authority to issue the road encroachment permit. However, since Andalex Resources, Inc., may claim that it owns the road, Applicant has filed an action in the Emery County District Court requesting that the court determine the owner of the road, and in the alternative seeking to acquire an easement from Andalex by eminent domain. Once the County issues a Road Encroachment Permit, the court action will ensure that Applicant has all the necessary permits and rights to construct the water line.

INTERWEST MINING COMPANY
A SUBSIDIARY OF PACIFICORP

1407 W. North Temple, Suite 110
Salt Lake City, UT 84116

January 13, 2017

Wayde S. Nielsen
Supervisor
**Emery County Road Department**
P.O. Box 889
300 West SR29
Castle Dale, UT 84513

***RE: Transmittal of Special Utility License Agreement Dated 12/20/2016 and Surety Bonds in Support of PacifiCorp's Water Pipeline Project – Rilda Canyon County Road No. 306 – Emery County, Utah***

Dear Mr. Nielsen:

On behalf of PacifiCorp, transmitted herewith is the completely endorsed original of the Special Utility License Agreement dated December 20, 2016.

In addition and in response to a letter from Emery County Attorney, Michael D. Olsen dated November 9, 2016 and in accordance with paragraph 9 of the referenced Special Utility License Agreement, enclosed are two surety performance bonds in favor of Emery County. The two surety performance bonds consist of:

1. Bond no. 106655281 issued by Travelers Casualty and Surety Company of America in the amount of $100,000 to accompany the referenced Roadway Encroachment Permit dated November 3, 2016 to ensure completion and restoration of the water pipeline project, and

2. Bond no. 106620564 issued by Travelers Casualty and Surety Company of America in the amount of $100,000 to accompany the referenced Special Utility License Agreement to ensure funding for future maintenance and repairs, if needed.

We want to express our appreciation to the County for their assistance with this very important project to enable PacifiCorp to install the required water pipeline to support final closure of the Deer Creek Mine and begin final reclamation.

We are hopeful to begin the project as soon as possible. Should you have any questions on the bond coverage, please feel free to contact me at 801-220-4612. Meanwhile, Dennis Oakley of our Huntington Office at 435-687-4725 will keep you well-informed of the project.

Sincerely,

Scott M. Child
Manager, Lands & Regulatory Affairs

Enclosures

SMC\Interwest\EmeryCounty2017-01(Bonds-SULA&RoadEncroachmentPermit-CountyRoad306-PipelineProj).doc

cc: D. Ralston, B. Morgan, C. Semborski, K. Fleck, D. Oakley, H. Gordon
PacifiCorp Risk Mgmt. w/copy encl. – L. Kotch (B-SUR-1182 and B-SUR-1183)

#34

12-20-16

# SPECIAL UTILITY LICENSE AGREEMENT

**THIS AGREEMENT made and entered into this 20 day of December, 2016, by and between EMERY COUNTY, hereinafter referred to as "COUNTY"' and PACIFICORP, an Oregon corporation, hereinafter referred to as the "COMPANY".**

**RECITALS:**

**WHEREAS**, the parties desire to assist in expediting the approval of COUNTY permits for operating, constructing and maintaining utility lines and related facilities ("facilities") within COUNTY rights of way, and

**WHEREAS**, the terms of this agreement shall apply to all permits issued to allow access onto COUNTY rights of way, and

**WHEREAS**, this agreement shall apply to approved location and construction permits on COUNTY rights of way in Emery County which are within the responsibility and jurisdiction of COUNTY; and

**NOW THEREFORE**, in consideration of the promises and mutual covenants and agreements contained herein, said parties hereby Covenant and agree as follows:

**(1) COUNTY AGREEMENT TO REVIEW APPLICATIONS:** This agreement is not a permit or a guarantee of a permit. However, COUNTY agrees to promptly review any application for a permit that COMPANY files pursuant to the procedures established in this agreement. COMPANY and COUNTY agree to work together in good faith to reach a mutually beneficial decision on any permit application.

**(2) APPROVAL:** All permits executed pursuant to this agreement will be deemed to be governed by the provisions of this agreement. Permit applications shall be presented to the COUNTY. COUNTY may apply special limitations or requirements, including timing constraints, for any work within the right of way. The issuance and approval of a permit for a particular facility enables the COMPANY to proceed with the work and permitted use in accordance with the terms of the permit.

**(3) INSPECTION:** COUNTY may perform routine inspection of utility construction work to monitor compliance with the license agreement and the specific encroachment permit. COUNTY's inspection does not relieve the COMPANY of its responsibilities in meeting the permit conditions and COUNTY's specifications.

**(4) COSTS:** The COMPANY shall pay the entire cost of the facilities installation unless COUNTY's highway project causes the relocation of the utility facilities, in which case the COUNTY shall pay the cost of relocation.

**(5) BEGINNING CONSTRUCTION:** The COMPANY shall not begin any work on COUNTY right of way until COUNTY issues a permit for the specific encroachment. Once the

COMPANY receives a permit from COUNTY, the COMPANY shall complete construction in accordance with the permit requirements.

(6) **TRAFFIC CONTROL:** The COMPANY shall perform all work in COUNTY roads so as to minimize interference with traffic flow.

(7) **EMERGENCY WORK:** Emergency work may be done without prior permit if imminent danger of loss of life or significant damage to property exists.

(8) **MAINTENANCE:** The facilities shall at all times be maintained, repaired, constructed and operated by and at the expense of the COMPANY. If the COMPANY fails to maintain the facilities in such a manner as to endanger COUNTY roads, COUNTY may notify the COMPANY of any maintenance needs. If the COMPANY receives notification of any maintenance requirements, the COMPANY shall perform the needed maintenance.

(9) **LIABILITY:** COMPANY is required to post a continuous bond in the amount of $100,000 to guarantee satisfactory performance under this agreement. COUNTY may proceed against said bond to recover all actual expenses incurred by COUNTY, its employees or contractors in repairing the sections of roadway damaged by the COMPANY, including the failure to restore the right of way to COUNTY's reasonable standards. The liability of the COMPANY shall not be limited to the amount of the bond. In the event claims exceed the amount of the bond, COUNTY may only claim the $100,000 maximum amount against the bond; however, the COMPANY shall be liable for any amounts exceeding the limits of the bond, but only to the extent the COMPANY may be liable for such claims under this agreement. The COMPANY shall notify COUNTY immediately in writing at the following address if this bond is planned to be terminated or is terminated: Emery County Road Department PO BOX 889 Castle Dale, Utah 84513.

COUNTY may require a performance and warranty bond from the COMPANY for permits issued under this agreement. The amount of the bond will be set according to the permitted scope of work. COUNTY may proceed against the bond to recover all expenses incurred by COUNTY, its employees or contractors to restore to COUNTY's reasonable standards the sections of roadway not completed or damaged by the COMPANY. The liability of the COMPANY shall not be limited to the amount of the bond.

The COMPANY will indemnify, defend, and hold harmless COUNTY from responsibility for any damage or liability arising from COMPANY's construction, maintenance, repair, or any other related operation during the work or as a result of the work pursuant to permits issued under this agreement except for the extent of COUNTY's or its agents' or contractors' negligence.

(10) **DEFAULT:** COUNTY shall notify the COMPANY in writing, setting forth any event of default, and the COMPANY will correct the default(s) within a reasonable time and to the reasonable satisfaction of COUNTY.

(11) **ASSIGNMENT:** The license and any permits issued hereunder agreement may be assigned by the COMPANY, but only with the prior written consent of COUNTY, which shall

not be unreasonably withheld.

**(12) SUCCESSORS AND ASSIGNS:** All covenants and agreements herein contained shall be binding upon the parties, their successors and assigns.

**(13) COMPLIANCE WITH COUNTY STANDARDDS:** The COMPANY shall conduct all work within the COUNTY rights-of-way in compliance with COUNTY's standards.

**(14) TERMINATION OF LICENSE AGREEMENT:** This agreement may be terminated at any time by either party upon one (1) year advance written notice to the other party. Active permits previously issued and approved under a terminated agreement are not affected and remain in effect on the same terms and conditions set forth in this agreement and the permits. The obligation to maintain the continuous bond as described in paragraph (12) above shall continue until COMPANY's facilities are removed from COUNTY's right-of-way. The indemnification obligations in this agreement shall survive termination of the agreement.

**(15) MISCELLANEOUS:**

A. Any changes to this agreement must be in writing and signed by both parties.
B. The failure of either party to insist upon strict compliance of any of the terms and conditions, or failure or delay by either party to exercise any rights or remedies provided in this agreement, or by law, will not release either party from any obligations arising under this agreement.
C. Each party represents that it has the authority to enter into this agreement.
D. This agreement shall be governed by and construed in accordance with the laws of Utah. In the event of a dispute, the venue shall be the Seventh District Court, Emery County, Utah.
E. If any provision or part of a provision of this agreement is held invalid, illegal or unenforceable in any respect, such invalidity, illegality or unenforceability shall not affect any other provision. Each provision shall be deemed to be enforceable to the fullest extent under applicable law.
F. To the fullest extent permitted by law, each of the parties waives any right to may have to a trial by jury in respect of litigation directly or indirectly arising out of, under, or in connection to this agreement. Each party further waives any right to consolidate any action in which a jury trial has been waived with other action in which a jury trial cannot be or has not been waived.

[*Signature page follows*]

Approved by:

PACIFICORP, an Oregon corporation

By: _____

Dana M. Ralston
Vice President, Coal Generation & Mining

EMERY COUNTY, a board corporate and politic

By: _____
Keith Brady, Chairman

ATTEST:

_____
BRENDA TUTTLE, Clerk/Auditor

APPROVED AS TO FORM:

_____
Michael D. Olsen
Emery County Attorney

# INDIVIDUAL PERFORMANCE AND WARRANTY BOND

**TO COVER A SINGLE ENCROACHMENT ON PROPERTY AND RIGHT-OF-WAY BELONGING**
to Emery County

B-SUR 1183

| | | | | | |
|---|---|---|---|---|---|
| | | **Bond Number:** | 106655281 | **Expiration Date:** | 12/20/2019 |
| **Specific Project Location:** | Rilda Canyon - County Road No.306 | | | | |

KNOW ALL MEN BY THESE PRESENTS:

That we PacifiCorp Mailing address: 1407 W. North Temple, Suite 110, Salt Lake City, UT 84116 Phone: 801-220-4612 as Principal, and Travelers Casualty and Surety Company of America as Surety, being duly authorized to transact business in the State of Utah, are held and firmly bound unto Emery County as Obligee, the full sum of $ 100,000.00. For the payment of which, well and truly to be made, we bind ourselves, our heirs, executors, administrators, successors and assign, jointly and severally, firmly by these presents.

The Principal has obtained or is about to obtain from Emery County an encroachment permit(s) to perform work on, about, below or adjacent to a roadway as specified in the permit(s), which is incorporated into this bond by reference.

The Principal is required to guarantee the completion of the permitted work, proper restoration and replacement of the county right-of-way to the extent the Principal causes any damage to the right-of-way, including but not limited to, roads, ditches, bridges, culverts and other appurtenances that the Principal utilized or impacted during the permitted work and warranty the permitted work for *a period of three (3) years* from the date of completion of the permitted work.

The Principal has agreed to comply with the rules, regulations, condition and restrictions stated in the permit(s).

If the Principal fails to complete the required work described in the permit, damages county right-of-way, including appurtenances and/or fails to perform the permitted work according to the applicable standards and specifications, including the conditions and limitations in the permit(s), it will be the responsibility of the Surety to arrange for the completion of all necessary work as required by the permit(s) and Emery County.

As a part of the obligation secured hereby and in addition to the face amount specified, there shall be included costs and reasonable expenses and fees including enforcing such obligation, all to be taxed as costs and included in any judgment rendered.

This bond shall be enforced for *a term of three (3) years* from this 20th day of December, 2016.

IN WITNESS WHEREOF, the parties have set their hands and seals this 10th day of January 2017.

PacifiCorp
Principal

Principal Seal

By: [signature]

Title: VP, OPERATIONS

Date: 1-13-17

Travelers Casualty and Surety Company of America
Surety

Surety Seal

By: [signature]
Christina L. Sandoval

Title: Attorney in Fact

Date: January 10, 2017

STATE OF Illinois
COUNTY OF Will

Christina L. Sandoval being first duly sworn, an oath, DEPOSES AND SAYS: that he/she is Attorney-in-Fact of Travelers Casualty and Surety Company of America the Surety of the foregoing bond, and that he/she is authorized to execute and deliver the foregoing obligation; that said Company is authorized to execute the same, and has complied in all respects with the laws of Utah in reference to begin sole surety upon bonds, undertakings and obligations.

One Tower Square, Bond / 5PB, Hartford, CT 06183 203-277-0111

MAILING ADDRESS OF SURETY COMPANY PHONE OF SURETY COMPANY

OFFICIAL SEAL
AARON D GRIFFIN
NOTARY PUBLIC, STATE OF ILLINOIS
MY COMMISSION EXPIRES 11/02/2019

[signature]
Signed

Subscribed and sworn to me before this 10th day of January, 2017.

Aaron D. Griffin

TRAVELERS

# POWER OF ATTORNEY

**Farmington Casualty Company**
**Fidelity and Guaranty Insurance Company**
**Fidelity and Guaranty Insurance Underwriters, Inc.**
**St. Paul Fire and Marine Insurance Company**
**St. Paul Guardian Insurance Company**
**St. Paul Mercury Insurance Company**
**Travelers Casualty and Surety Company**
**Travelers Casualty and Surety Company of America**
**United States Fidelity and Guaranty Company**

**Attorney-In Fact No.** 230983

**Certificate No.** 006975894

**KNOW ALL MEN BY THESE PRESENTS:** That Farmington Casualty Company, St. Paul Fire and Marine Insurance Company, St. Paul Guardian Insurance Company, St. Paul Mercury Insurance Company, Travelers Casualty and Surety Company, Travelers Casualty and Surety Company of America, and United States Fidelity and Guaranty Company are corporations duly organized under the laws of the State of Connecticut, that Fidelity and Guaranty Insurance Company is a corporation duly organized under the laws of the State of Iowa, and that Fidelity and Guaranty Insurance Underwriters, Inc., is a corporation duly organized under the laws of the State of Wisconsin (herein collectively called the "Companies"), and that the Companies do hereby make, constitute and appoint

Debra J. Doyle, Diane M. O'Leary, James B. McTaggart, Jennifer L. Jakaitis, Judith A. Lucky-Eftimov, Sandra M. Winsted, Sandra M. Nowak, Susan A. Welsh, Christina L. Sandoval, Linh Eck, and Jessica B. Dempsey

of the City of Chicago, State of Illinois, their true and lawful Attorney(s)-in-Fact, each in their separate capacity if more than one is named above, to sign, execute, seal and acknowledge any and all bonds, recognizances, conditional undertakings and other writings obligatory in the nature thereof on behalf of the Companies in their business of guaranteeing the fidelity of persons, guaranteeing the performance of contracts and executing or guaranteeing bonds and undertakings required or permitted in any actions or proceedings allowed by law.

**IN WITNESS WHEREOF**, the Companies have caused this instrument to be signed and their corporate seals to be hereto affixed, this 15th day of September, 2016.

**Farmington Casualty Company**
**Fidelity and Guaranty Insurance Company**
**Fidelity and Guaranty Insurance Underwriters, Inc.**
**St. Paul Fire and Marine Insurance Company**
**St. Paul Guardian Insurance Company**
**St. Paul Mercury Insurance Company**
**Travelers Casualty and Surety Company**
**Travelers Casualty and Surety Company of America**
**United States Fidelity and Guaranty Company**

State of Connecticut
City of Hartford ss.

By: _____
Robert L. Raney, Senior Vice President

On this the 15th day of September, 2016, before me personally appeared Robert L. Raney, who acknowledged himself to be the Senior Vice President of Farmington Casualty Company, Fidelity and Guaranty Insurance Company, Fidelity and Guaranty Insurance Underwriters, Inc., St. Paul Fire and Marine Insurance Company, St. Paul Guardian Insurance Company, St. Paul Mercury Insurance Company, Travelers Casualty and Surety Company, Travelers Casualty and Surety Company of America, and United States Fidelity and Guaranty Company, and that he, as such, being authorized so to do, executed the foregoing instrument for the purposes therein contained by signing on behalf of the corporations by himself as a duly authorized officer.

**In Witness Whereof,** I hereunto set my hand and official seal.
My Commission expires the 30th day of June, 2021.

Marie C. Tetreault, Notary Public

58440-5-16 Printed in U.S.A.

This Power of Attorney is granted under and by the authority of the following resolutions adopted by the Boards of Directors of Farmington Casualty Company, Fidelity and Guaranty Insurance Company, Fidelity and Guaranty Insurance Underwriters, Inc., St. Paul Fire and Marine Insurance Company, St. Paul Guardian Insurance Company, St. Paul Mercury Insurance Company, Travelers Casualty and Surety Company, Travelers Casualty and Surety Company of America, and United States Fidelity and Guaranty Company, which resolutions are now in full force and effect, reading as follows:

**RESOLVED**, that the Chairman, the President, any Vice Chairman, any Executive Vice President, any Senior Vice President, any Vice President, any Second Vice President, the Treasurer, any Assistant Treasurer, the Corporate Secretary or any Assistant Secretary may appoint Attorneys-in-Fact and Agents to act for and on behalf of the Company and may give such appointee such authority as his or her certificate of authority may prescribe to sign with the Company's name and seal with the Company's seal bonds, recognizances, contracts of indemnity, and other writings obligatory in the nature of a bond, recognizance, or conditional undertaking, and any of said officers or the Board of Directors at any time may remove any such appointee and revoke the power given him or her; and it is

**FURTHER RESOLVED**, that the Chairman, the President, any Vice Chairman, any Executive Vice President, any Senior Vice President or any Vice President may delegate all or any part of the foregoing authority to one or more officers or employees of this Company, provided that each such delegation is in writing and a copy thereof is filed in the office of the Secretary; and it is

**FURTHER RESOLVED**, that any bond, recognizance, contract of indemnity, or writing obligatory in the nature of a bond, recognizance, or conditional undertaking shall be valid and binding upon the Company when (a) signed by the President, any Vice Chairman, any Executive Vice President, any Senior Vice President or any Vice President, any Second Vice President, the Treasurer, any Assistant Treasurer, the Corporate Secretary or any Assistant Secretary and duly attested and sealed with the Company's seal by a Secretary or Assistant Secretary; or (b) duly executed (under seal, if required) by one or more Attorneys-in-Fact and Agents pursuant to the power prescribed in his or her certificate or their certificates of authority or by one or more Company officers pursuant to a written delegation of authority; and it is

**FURTHER RESOLVED**, that the signature of each of the following officers: President, any Executive Vice President, any Senior Vice President, any Vice President, any Assistant Vice President, any Secretary, any Assistant Secretary, and the seal of the Company may be affixed by facsimile to any Power of Attorney or to any certificate relating thereto appointing Resident Vice Presidents, Resident Assistant Secretaries or Attorneys-in-Fact for purposes only of executing and attesting bonds and undertakings and other writings obligatory in the nature thereof, and any such Power of Attorney or certificate bearing such facsimile signature or facsimile seal shall be valid and binding upon the Company and any such power so executed and certified by such facsimile signature and facsimile seal shall be valid and binding on the Company in the future with respect to any bond or understanding to which it is attached.

I, Kevin E. Hughes, the undersigned, Assistant Secretary, of Farmington Casualty Company, Fidelity and Guaranty Insurance Company, Fidelity and Guaranty Insurance Underwriters, Inc., St. Paul Fire and Marine Insurance Company, St. Paul Guardian Insurance Company, St. Paul Mercury Insurance Company, Travelers Casualty and Surety Company, Travelers Casualty and Surety Company of America, and United States Fidelity and Guaranty Company do hereby certify that the above and foregoing is a true and correct copy of the Power of Attorney executed by said Companies, which is in full force and effect and has not been revoked.

**IN TESTIMONY WHEREOF**, I have hereunto set my hand and affixed the seals of said Companies this 10th day of January, 2017.

Kevin E. Hughes, Assistant Secretary

To verify the authenticity of this Power of Attorney, call 1-800-421-3880 or contact us at www.travelersbond.com. Please refer to the Attorney-In-Fact number, the above-named individuals and the details of the bond to which the power is attached.

B-SUR 1182

**Bond #** 106620564

# SPECIAL UTILITY LICENSE AGREEMENT BOND

## TO COVER THE PLACEMENT AND MAINTENANCE OF UTLITIES AND RIGHT-OF-WAY

KNOW ALL MEN BY THESE PRESENTS:

That we PacifiCorp

Mailing Address: 1407 W. North Temple, Suite 110, Salt Lake City, UT 84116 Phone: 801-220-4612 as Principal, and Travelers Casualty and Surety Company of America as Surety, being duly authorized to transact business in the State of Utah, are held and firmly bound unto Emery County as Obligee, the full sum of $100,000. For the payment of which, well and truly to be made, we bind ourselves, our heirs, executors, administrators, successors and assign, jointly and severally, firmly by these presents.

The Principal has entered into a utility license agreement with Emery County for the purpose of constructing, locating and maintaining overhead and/or underground facilities and related appurtenances within the county rights-of-way stated in the Special Utility License Agreement

executed on the 20th day of December , 2016 .

The Principal is required to maintain this surety bond in perpetuity to guarantee the completion of the proper restoration and replacement of county right-of-way to the extent the Principal or its utility facility causes any damage to the right-of-way, including but not limited to, roads, ditches, bridges, culverts and other appurtenances that the Principal utilizes or impacts.

The Principal has agreed to comply with the rules, regulations, condition and restrictions stated in the permit(s) issued by Emery County.

If the Principal fails to complete the required work described in the permit(s), damages county right-of-way, including appurtenances and/or fails to perform the permitted work according to the applicable standards and specifications, including the conditions and limitations in the permit(s), it will be the responsibility of the Surety to arrange for the timely completion of all necessary work as required by the permit(s) and Emery County.

As a part of the obligation secured hereby and in addition to the face amount specified, costs and reasonable expenses and fees including enforcing such obligation, shall be taxed as costs and included in any judgment rendered.

This bond shall be enforced for a continuous period. The Surety may terminate this bond upon giving Emery County written notice by certified mail to the following address:

Emery County
P.O. Box 249
Castle Dale, UT
84513-0249

The termination shall be effective ninety (90) days after the receipt of the notice by Emery County.

IN WITNESS WHEREOF, the parties hereto have set their hands and seals this 10th day of January 2017.

Principal Seal

PacifiCorp
Principal

By: Paul Radakovich

PAUL RADAKOVICH
PRINT NAME

Title: VP, OPERATIONS

Date: 1-13-17

Surety Seal

Travelers Casualty and Surety Company of America
Surety

By: Christina L. Sandoval

Christina L. Sandoval
PRINT NAME

Title: Attorney in Fact

Date: January 10, 2017

STATE OF: Illinois

COUNTY OF: Will

Christina L. Sandoval Being first duly sworn, an oath, DEPOSES AND SAYS: That he/she is Attorney-in-Fact of Travelers Casualty and Surety Company of America the Surety of the foregoing bond, and that he/she is authorized to execute and deliver the foregoing obligation; that said Company is authorized to execute the same, and has complied in all respects with the laws of Utah in reference to begin sole surety upon bonds, undertakings and obligations.

One Tower Square, Bond / 5PB, Hartford, CT 06183
MAILING ADDRESS OF SURETY COMPANY

Phone: 203-277-0111
PHONE OF SURETY COMPANY

Signed

Aaron D. Griffin
PRINT NAME

OFFICIAL SEAL
AARON D GRIFFIN
NOTARY PUBLIC, STATE OF ILLINOIS
MY COMMISSION EXPIRES 11/02/2019

Subscribed and sworn to me before this 10th day of January, 2017.

WARNING: THIS POWER OF ATTORNEY IS INVALID WITHOUT THE RED BORDER

TRAVELERS

# POWER OF ATTORNEY

**Farmington Casualty Company**
**Fidelity and Guaranty Insurance Company**
**Fidelity and Guaranty Insurance Underwriters, Inc.**
**St. Paul Fire and Marine Insurance Company**
**St. Paul Guardian Insurance Company**
**St. Paul Mercury Insurance Company**
**Travelers Casualty and Surety Company**
**Travelers Casualty and Surety Company of America**
**United States Fidelity and Guaranty Company**

**Attorney-In Fact No.** 230983

**Certificate No.** 006975893

**KNOW ALL MEN BY THESE PRESENTS**: That Farmington Casualty Company, St. Paul Fire and Marine Insurance Company, St. Paul Guardian Insurance Company, St. Paul Mercury Insurance Company, Travelers Casualty and Surety Company, Travelers Casualty and Surety Company of America, and United States Fidelity and Guaranty Company are corporations duly organized under the laws of the State of Connecticut, that Fidelity and Guaranty Insurance Company is a corporation duly organized under the laws of the State of Iowa, and that Fidelity and Guaranty Insurance Underwriters, Inc., is a corporation duly organized under the laws of the State of Wisconsin (herein collectively called the "Companies"), and that the Companies do hereby make, constitute and appoint

Debra J. Doyle, Diane M. O'Leary, James B. McTaggart, Jennifer L. Jakaitis, Judith A. Lucky-Eftimov, Sandra M. Winsted, Sandra M. Nowak, Susan A. Welsh, Christina L. Sandoval, Linh Eck, and Jessica B. Dempsey

of the City of Chicago, State of Illinois, their true and lawful Attorney(s)-in-Fact, each in their separate capacity if more than one is named above, to sign, execute, seal and acknowledge any and all bonds, recognizances, conditional undertakings and other writings obligatory in the nature thereof on behalf of the Companies in their business of guaranteeing the fidelity of persons, guaranteeing the performance of contracts and executing or guaranteeing bonds and undertakings required or permitted in any actions or proceedings allowed by law.

**IN WITNESS WHEREOF**, the Companies have caused this instrument to be signed and their corporate seals to be hereto affixed, this 15th day of September, 2016.

**Farmington Casualty Company**
**Fidelity and Guaranty Insurance Company**
**Fidelity and Guaranty Insurance Underwriters, Inc.**
**St. Paul Fire and Marine Insurance Company**
**St. Paul Guardian Insurance Company**
**St. Paul Mercury Insurance Company**
**Travelers Casualty and Surety Company**
**Travelers Casualty and Surety Company of America**
**United States Fidelity and Guaranty Company**

State of Connecticut
City of Hartford ss.

By: _____
Robert L. Raney, Senior Vice President

On this the 15th day of September, 2016, before me personally appeared Robert L. Raney, who acknowledged himself to be the Senior Vice President of Farmington Casualty Company, Fidelity and Guaranty Insurance Company, Fidelity and Guaranty Insurance Underwriters, Inc., St. Paul Fire and Marine Insurance Company, St. Paul Guardian Insurance Company, St. Paul Mercury Insurance Company, Travelers Casualty and Surety Company, Travelers Casualty and Surety Company of America, and United States Fidelity and Guaranty Company, and that he, as such, being authorized so to do, executed the foregoing instrument for the purposes therein contained by signing on behalf of the corporations by himself as a duly authorized officer.

**In Witness Whereof,** I hereunto set my hand and official seal.
My Commission expires the 30th day of June, 2021.

Marie C. Tetreault
Marie C. Tetreault, Notary Public

58440-5-16 Printed in U.S.A.

WARNING: THIS POWER OF ATTORNEY IS INVALID WITHOUT THE RED BORDER

This Power of Attorney is granted under and by the authority of the following resolutions adopted by the Boards of Directors of Farmington Casualty Company, Fidelity and Guaranty Insurance Company, Fidelity and Guaranty Insurance Underwriters, Inc., St. Paul Fire and Marine Insurance Company, St. Paul Guardian Insurance Company, St. Paul Mercury Insurance Company, Travelers Casualty and Surety Company, Travelers Casualty and Surety Company of America, and United States Fidelity and Guaranty Company, which resolutions are now in full force and effect, reading as follows:

**RESOLVED**, that the Chairman, the President, any Vice Chairman, any Executive Vice President, any Senior Vice President, any Vice President, any Second Vice President, the Treasurer, any Assistant Treasurer, the Corporate Secretary or any Assistant Secretary may appoint Attorneys-in-Fact and Agents to act for and on behalf of the Company and may give such appointee such authority as his or her certificate of authority may prescribe to sign with the Company's name and seal with the Company's seal bonds, recognizances, contracts of indemnity, and other writings obligatory in the nature of a bond, recognizance, or conditional undertaking, and any of said officers or the Board of Directors at any time may remove any such appointee and revoke the power given him or her; and it is

**FURTHER RESOLVED**, that the Chairman, the President, any Vice Chairman, any Executive Vice President, any Senior Vice President or any Vice President may delegate all or any part of the foregoing authority to one or more officers or employees of this Company, provided that each such delegation is in writing and a copy thereof is filed in the office of the Secretary; and it is

**FURTHER RESOLVED**, that any bond, recognizance, contract of indemnity, or writing obligatory in the nature of a bond, recognizance, or conditional undertaking shall be valid and binding upon the Company when (a) signed by the President, any Vice Chairman, any Executive Vice President, any Senior Vice President or any Vice President, any Second Vice President, the Treasurer, any Assistant Treasurer, the Corporate Secretary or any Assistant Secretary and duly attested and sealed with the Company's seal by a Secretary or Assistant Secretary; or (b) duly executed (under seal, if required) by one or more Attorneys-in-Fact and Agents pursuant to the power prescribed in his or her certificate or their certificates of authority or by one or more Company officers pursuant to a written delegation of authority; and it is

**FURTHER RESOLVED**, that the signature of each of the following officers: President, any Executive Vice President, any Senior Vice President, any Vice President, any Assistant Vice President, any Secretary, any Assistant Secretary, and the seal of the Company may be affixed by facsimile to any Power of Attorney or to any certificate relating thereto appointing Resident Vice Presidents, Resident Assistant Secretaries or Attorneys-in-Fact for purposes only of executing and attesting bonds and undertakings and other writings obligatory in the nature thereof, and any such Power of Attorney or certificate bearing such facsimile signature or facsimile seal shall be valid and binding upon the Company and any such power so executed and certified by such facsimile signature and facsimile seal shall be valid and binding on the Company in the future with respect to any bond or understanding to which it is attached.

I, Kevin E. Hughes, the undersigned, Assistant Secretary, of Farmington Casualty Company, Fidelity and Guaranty Insurance Company, Fidelity and Guaranty Insurance Underwriters, Inc., St. Paul Fire and Marine Insurance Company, St. Paul Guardian Insurance Company, St. Paul Mercury Insurance Company, Travelers Casualty and Surety Company, Travelers Casualty and Surety Company of America, and United States Fidelity and Guaranty Company do hereby certify that the above and foregoing is a true and correct copy of the Power of Attorney executed by said Companies, which is in full force and effect and has not been revoked.

**IN TESTIMONY WHEREOF**, I have hereunto set my hand and affixed the seals of said Companies this 10th day of January, 20 17.

Kevin E. Hughes, Assistant Secretary

To verify the authenticity of this Power of Attorney, call 1-800-421-3880 or contact us at www.travelersbond.com. Please refer to the Attorney-In-Fact number, the above-named individuals and the details of the bond to which the power is attached.

# PacifiCorp

# Deer Creek Mine

# C/015/0018

**Amendment to Add a Post-Mining Water Discharge at Rilda Canyon Portals, Permit Area Change to Include Discharge Pipeline Route and Potential Treatment Facility Area, PacifiCorp, Deer Creek Mine, C/015/0018, Emery County, Utah**

**<u>Legal and Financial Volume, Appendix G</u>**

**Insert into Legal and Financial Volume, Appendix G, replace Deer Creek permit boundary description**

# Deer Creek Permit Boundary Description

**T16S, R6E, SLB&M  Emery County, UT**

| Section | Description | Acreage |
|---|---|---|
| Sec 1: | SE¼ | 160.00 |
| Sec 10: | E½E½SE¼ | 40.00 |
| | S½NE¼NE¼ | 20.00 |
| | SE¼NE¼ | 40.00 |
| | W½E½SE¼ | 40.00 |
| Sec 11: | All | 919.96 |
| Sec 12: | All | 640.00 |
| Sec 13: | All | 640.00 |
| Sec 14: | All | 915.20 |
| Sec 15: | E½E½ | 160.00 |
| | E½W½E½ | 80.00 |
| Sec 22: | Lots 1,2,3,4,5,6,7 | 258.70 |
| | E½NE¼ | 80.00 |
| | SW¼NE¼ | 40.00 |
| | N½SE¼ | 80.00 |
| Sec 23: | N½ | 320.00 |
| | N½S½ | 160.00 |
| Sec 24: | N½ | 320.00 |
| Sec 25: | E½SE¼SE¼ | 20.00 |
| | **Total for Township** | **4,933.86** |

# Deer Creek Permit Boundary Description

**T16S, R7E, SLB&M  Emery County, UT**

| Section | Description | Acreage |
|---|---|---|
| Sec 5: | Beginning at a point S 02◦40'40" E, 145.00 feet from the west 1/4 corner of Section 5, thence East, 235.00 feet; thence South, 330.00 feet; thence S 48◦ 48' 00" W, 138.00 feet; thence S 20◦ 00' 00" W, 133.00 feet; thence South, 45.00 feet; thence S 45◦ 00' 00" W, 78.42 feet; thence N 02◦ 40' 40" W, 647.03 feet to the point of beginning. Said area contains 2.41 acres, more or less. | 2.41 |
| Sec 6: | Lots 5,6,7,8, | 122.66 |
| | S½SE¼ | 80.00 |
| Sec 7: | All | 413.60 |
| Sec 18: | Lots 1,2, | 46.27 |
| | NE¼ | 160.00 |
| Sec 19: | SE¼ | 160.00 |
| | Lots 2-3 | 45.70 |
| | W½SW¼NE¼ | 20.00 |
| Sec 20: | S½ | 320.00 |
| | SE¼NW¼ | 40.00 |
| | S½NE¼ | 80.00 |
| | E½E½SW¼NW¼ | 10.00 |
| Sec 21: | S½N½ | 160.00 |
| | SW¼ | 160.00 |
| | SE¼ | 160.00 |
| Sec 22: | SW¼ | 160.00 |
| | SW¼NW¼ | 40.00 |
| Sec 27: | SW¼ | 160.00 |
| Sec 28: | N½NE¼ | 80.00 |
| | E½NW¼ | 80.00 |
| | W½NW¼ | 80.00 |
| | W½SW¼ | 80.00 |
| | E½SW¼ | 80.00 |
| | SE¼ | 160.00 |
| Sec 29: (ALL) | N½ | 320.00 |
| | SW¼ | 160.00 |
| | W½SE¼ | 80.00 |
| | E½SE¼ | 80.00 |
| Sec 30: | Lot 4 | 22.97 |
| | E½ | 320.00 |
| Sec 32: | All | 640.00 |
| Sec 33: (ALL) | E½ | 320.00 |
| | E½W½ | 160.00 |
| | SW¼SW¼ | 40.00 |
| | W½NW¼ | 80.00 |
| | NW¼SW¼ | 40.00 |
| Sec 34: | W½NE¼SW¼ | 20.00 |
| | S½S½ | 160.00 |
| | W½NW¼ | 80.00 |
| | W½E½NW¼ | 40.00 |
| | NW¼SW¼ | 40.00 |
| | **Total for Township** | **5,503.61** |

# Deer Creek Permit Boundary Description

**T17S, R6E, SLB&M  Emery County, UT**

| Section | Description | Acreage |
|---|---|---|
| Sec 1: | Lots 1-3 | 131.48 |
| | S½NE¼ | 80.00 |
| | SE¼NW¼ | 40.00 |
| | E½SW¼ | 80.00 |
| | SE¼ | 160.00 |
| Sec 12: | E½ | 320.00 |
| | E½W½ | 160.00 |
| Sec 13: | NE¼ | 160.00 |
| | E½NW¼ | 80.00 |
| | E½SW¼ | 80.00 |
| | SE¼ | 160.00 |
| Sec 24: | E½W½ | 160.00 |
| | E½ | 320.00 |
| Sec 25: | N½NE¼ | 80.00 |

Beginning at the Southeast corner of the Northeast quarter of the Southeast quarter of Section 25, Township 17 South, Range 6 East, SLB&M, and running thence S 89°20'20" W, 1482.82 feet along 40 acre line to the centerline of Cottonwood Canyon Road; thence N 18°32'22" W, 211.65 feet along centerline of said road; thence N 18°00'23" W, 236.55 feet along centerline of said road; thence N 13°36'45" W, 219.23 feet along centerline of said road; thence N 10°17'37" W, 104.54 feet along centerline of said road; thence N 08°20'49" W, 350.40 feet along centerline of said road; thence N 10°33'11" W, 476.22 feet along centerline of said road; thence N 24°01'08" W, 163.55 feet along centerline of said road; thence N 20°01'04" W, 87.46 feet along centerline of said road; thence N 10°00'01" W, 150.85 feet along centerline of said road; thence N 02°27'38" W, 152.52 feet along centerline of said road; thence N 01°54'03" E, 211.25 feet along centerline of said road; thence N 00°12'51" W, 242.02 feet along centerline of said road; thence N 10°41'22" E, 106.12 feet along centerline of said road to the north line of the South half of the Northeast quarter of said Section 25; thence N 89°46'01" E, 1898.88 feet along 40 acre line to the Northeast corner of the Southeast quarter of the Northeast quarter of said Section 25; thence S 00°12'37" E 1309.21 feet to the East quarter corner of said Section 25: thence S 00°29'09" E 1328.42 feet to the point of beginning.

103.72

**T17S, R6E, SLB&M  Emery County, UT  (Pipeline from Rilda Canyon to Huntington Plant)**

| Section | Description | Acreage |
|---|---|---|
| Sec: 28 | N½S½SW¼NE¼ | 10.00 |
| | S½NE¼SW¼NE¼ | 5.00 |
| | N½SE¼NE¼ | 20.00 |
| Sec: 27 | S½NW¼NW¼ | 20.00 |
| | NE¼NW¼NW¼ | 10.00 |
| | NW¼NE¼NW¼ | 10.00 |
| Sec: 22 | SW¼SW¼SE¼ | 10.00 |
| | N½SW¼SE¼ | 20.00 |
| | E½NW¼SE¼ | 20.00 |
| | S½NW¼NE¼SE¼ | 5.00 |
| | N½SW¼NE¼SE¼ | 5.00 |
| | SE¼NE¼SE¼ | 10.00 |
| | E½NE¼SE¼SE¼ | 5.00 |
| | E½SE¼SE¼SE¼ | 5.00 |
| Sec: 23 | W½W½W½SW¼SW¼ | 5.00 |
| Sec: 26 | N½SW¼NW¼ | 20.00 |

## Deer Creek Permit Boundary Description

| | | |
|---|---|---|
| | SE¼SW¼NW¼ | 10.00 |
| | W½SW¼SE¼NW¼ | 5.00 |
| | W½W½NE¼SW¼ | 10.00 |
| | W½SE¼SW¼ | 20.00 |
| | S½SE¼SE¼SW¼ | 5.00 |
| Sec: 27 | E½NE¼NE¼ | 20.00 |
| | NE¼SE¼NE¼ | 10.00 |
| Sec: 35 | NE¼NE¼NW¼ | 10.00 |
| | N½NW¼NE¼ | 20.00 |
| | N½SE¼NW¼NE¼ | 5.00 |
| | S½NE¼NE¼ | 20.00 |
| Sec: 36 | S½NW¼NW¼ | 20.00 |
| | NE¼SW¼NW¼ | 10.00 |
| | E½SE¼SW¼NW¼ | 5.00 |
| | W½SW¼SE¼NW¼ | 5.00 |
| | E½NE¼NW¼SW¼ | 5.00 |
| | W½NW¼NE¼SW¼ | 5.00 |
| | NW¼SW¼NE¼SW¼ | 2.50 |
| | | 367.50 |
| | **Total for Township** | 2482.70 |

# Deer Creek Permit Boundary Description

**T17S, R7E, SLB&M  Emery County, UT**

| Section | Description | Acreage |
|---|---|---|
| Sec 1: | Beginning at a point S 0° 22' E, 142.4 feet from the SW corner of NW¼ of Section 1, T17S, R7E, SLB&M; thence, N 49° 53' 23" E, 2395.4 feet; thence, S 40° 10' 42" E, 101.94 feet; thence, S 49° 52' 03" W, 2481.12 feet; thence, N 0° 22' W, 276.25 feet to the point of beginning. 5.6 acres more or less. | 5.60 |
| Sec 2: | SE¼ (SULA #1382) | 160.00 |
| | within the SE¼SE¼SW¼ (BLM ROW - U52401) | 1.84 |
| Sec 3: | Lots 1 - 8, 10 - 12 | 331.20 |
| | SW¼ | 160.00 |
| | SW¼SE¼ | 40.00 |
| | W½W½SE¼SE¼ | 10.00 |
| Sec 4: (ALL) | Lots 1, 8, 9 | 92.18 |
| | Lot 2 | 11.95 |
| | Lots 3-6 | 103.19 |
| | Lots 7 and 10 | 80.00 |
| | Lots 11 and 12 | 80.00 |
| | NW¼SE¼ | 40.00 |
| | N½SW¼ | 80.00 |
| | S½SW¼ | 80.00 |
| | SW¼SE¼ | 40.00 |
| | E½SE¼ | 80.00 |
| Sec 5: (ALL) | Lots 1-8 | 203.92 |
| | W½ of Lot 11 | 20.00 |
| | Lot 12 | 40.00 |
| | E½ of Lot 11 | 20.00 |
| | Lots 9 and 10 | 80.00 |
| | N½SE¼ | 80.00 |
| | N½SW¼ | 80.00 |
| | SW¼SW¼ | 40.00 |
| | S½SE¼ | 80.00 |
| | SE¼SW¼ | 40.00 |
| Sec 6: (ALL) | Lots 1, 6, 7 | 90.45 |
| | Lots 2-5, 8-11 | 186.24 |
| | NE¼SE¼ | 40.00 |
| | W⅔SE¼SE¼ | 26.67 |
| | E⅓SE¼SE¼ | 13.33 |
| | W½SE¼ | 80.00 |
| Sec 7: | Lots 1-4 | 90.80 |
| | W½NW¼NE¼ | 20.00 |
| | NE¼NW¼NE¼ | 10.00 |
| Sec 9: | E½NW¼ | 80.00 |
| | NE¼ | 160.00 |
| | NE¼SW¼ | 40.00 |
| | N½SE¼ | 80.00 |
| Sec 10: | NE¼ | 160.00 |
| | W½W½NW¼ | 40.00 |
| | SE¼SW¼NW¼ | 10.00 |
| | S½SE¼NW¼ | 20.00 |
| | SW¼ | 160.00 |
| | SE¼ | 160.00 |
| Sec 11: | N½NW¼ | 80.00 |
| | N½SW¼NW¼ | 20.00 |
| | SE¼NW¼ | 40.00 |
| | W½SW¼ | 80.00 |
| | S½SW¼NW¼ | 20.00 |
| Sec 14: | W½NW¼ | 80.00 |
| Sec 15: | NW¼ | 160.00 |
| | E½SW¼ | 80.00 |
| | E½W½SW¼ | 40.00 |
| Sec 16: | S½S½SW¼ | 40.00 |
| | SW¼SW¼SE¼ | 10.00 |
| Sec 17: | NW¼ | 160.00 |
| | SW¼ | 160.00 |

# Deer Creek Permit Boundary Description

| T17S, R7E, SLB&M | Emery County, UT Cont. | |
|---|---|---|
| | S½S½SE¼ | 40.00 |
| Sec 18: (ALL) | Lots 1 and 2 | 45.87 |
| | Lots 3 and 4 | 47.10 |
| | NE¼ | 160.00 |
| | SE¼ | 160.00 |
| Sec 19: (ALL) | Lots 1 - 4 | 92.67 |
| | E½ | 320.00 |
| Sec 20: (ALL) | W½ | 320.00 |
| | W½E½ | 160.00 |
| | E½E½ | 160.00 |
| Sec 21: | NW¼ | 160.00 |
| | SW¼ | 160.00 |
| | W½W½W½NE¼ | 20.00 |
| | W½W½NW¼SE¼ | 10.00 |
| | S½SE¼ | 80.00 |
| Sec 22: | E½NW¼ | 80.00 |
| | E½W½NW¼ | 40.00 |
| | E½SW¼ | 80.00 |
| | E½NW¼SW¼ | 20.00 |
| | SW¼SW¼ | 40.00 |
| | W½SE¼ | 80.00 |
| Sec 27: | N½NW¼ | 80.00 |
| | NW¼NE¼ | 40.00 |
| Sec 28: | N½NE¼ | 80.00 |
| | E½NE¼NW¼ | 20.00 |
| Sec 29: | NW¼NE¼ | 40.00 |
| | N½NW¼ | 80.00 |
| Sec 30: | Lots 1, 5, 6 | 63.00 |
| | N½NE¼ | 80.00 |
| | SW¼NE¼ | 40.00 |
| | NW¼SE¼ | 40.00 |
| | **Total for Township** | **7,356.01** |

**T17S, R8E, SLB&M Emery County, UT**

| Section | Description | Acreage |
|---|---|---|
| Sec: 6<br>Deer Creek Waste Rock Site | Beginning 10 feet South of the NE corner of Section 6, T17S, R8E, SLB&M; thence, S 89° 52' 00" W, 1272.000 feet; thence, S 0° 08' 00" E, 600.000 feet; thence, S 83° 28' 43" E, 302.035 feet; thence, S 72° 54' 35" E, 314.083 feet; thence, S 63° 06' 41" E, 224.508 feet; thence, S 48° 18' 17" E, 268.404 feet; thence, S 20° 06' 29" W, 1066.848 feet; thence, S 39° 24' 03" W, 855.358 feet; thence, S 41° 10' 40" E, 100 feet; thence, N 43° 39' 42" E, 1635.000 feet; thence, N 31° 02' 18" E, 412.959 feet; thence, N 22° 58' 45" E, 1310.908 feet; thence, N 89° 40' 41"W, 740.000 feet; to the point of beginning. 31.92 acres more or less. | 31.92 |
| | **Total for Township** | **31.92** |

**Total Permit Acres** ~~19,940.60~~ **20,308.10**

Refer to Surface and Subsurface ownership maps in Volume 4.

## Deer Creek Permit Boundary Description

The Deer Creek Mine permit covers an area approximately ~~19,940.60~~ 20,308.10 acres. The total disturbed area at the mine is currently 91.63 acres.

**Disturbed Area Reconciliation Table**

| Type Area | Area Name | Reclamation Completion Date | Disturbed Acreage | Phase I Bond Release Date | Phase II Bond Release Date | Phase III Bond Release Date |
|---|---|---|---|---|---|---|
| Mine Site | Deer Creek Main Mine | N/A | 50.08 | | | |
| Mine Site | Rilda Canyon Left Fork Fan Facilities | N/A | 2.33 | | | |
| Mine Site | Rilda Canyon Portal/Fan Facilities | N/A | 7.28 | | | |
| Remote Portal | 9th East Meetinghouse Portals | N/A | 0.02 | | | |
| Remote Portal | 9th East Grimes Wash Portals | Dec-99 | 0.00 | 7/13/2007 | 11/8/2011 | 11/8/2011 |
| Waste Rock Site* | Deer Creek Waste Rock Site | N/A | 31.92 | | | |
| **Total** | | | **91.63** | | | |

* The Deer Creek Waste Rock Site was transferred to Bowie Refined Coal in a purchase agreement on August 4, 2015.

# PacifiCorp

# Deer Creek Mine

# C/015/0018

**Amendment to Add a Post-Mining Water Discharge at Rilda Canyon Portals, Permit Area Change to Include Discharge Pipeline Route and Potential Treatment Facility Area, PacifiCorp, Deer Creek Mine, C/015/0018, Emery County, Utah**

**<u>Volume 11, R645-301-300 Biology, Maps Tab</u>**

**Replace Maps 300-1, 300-2, 300-3, 300-4, 300-5, 300-6**

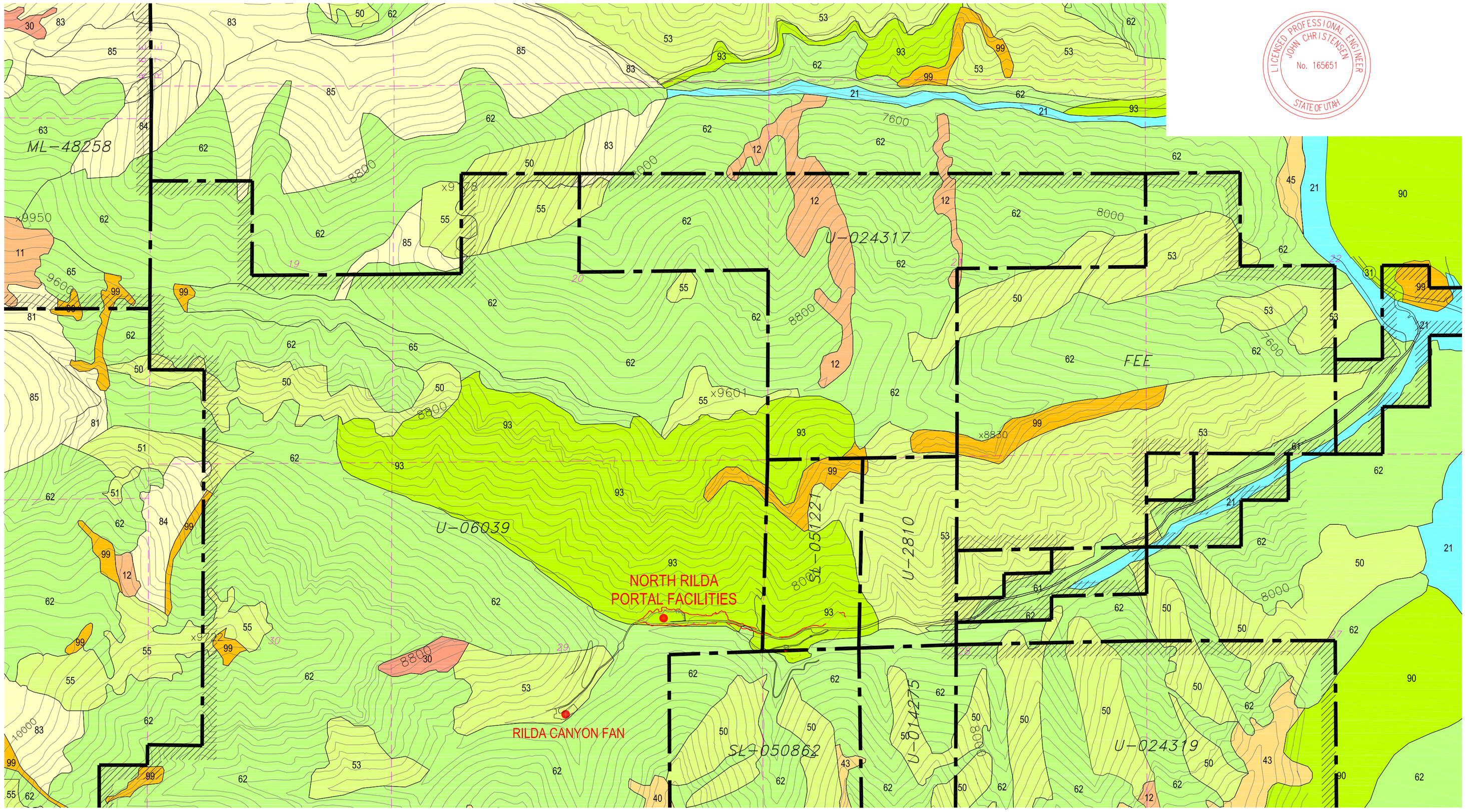


LICENSED PROFESSIONAL ENGINEER
JOHN CHRISTENSEN
No. 165651
STATE OF UTAH

MANTI-LA SAL NATIONAL FOREST VEGETATION COVER TYPE MAPPING

GRASSLANDS
- 10 GRASSLANDS UNCLASSIFIED
- 11 PERENNIAL GRASSLANDS (HIGH ELEVATIONS)
- 12 PERENNIAL GRASSLANDS (MID-LOW ELEVATIONS)
- 13 DESERT GRASSLANDS

RIPARIAN LANDS
- 20 PERENNIAL WET LANDS & MEADOWS
- 21 TREE DOMINATED RIPARIAN AREAS
- 22 INTERMITTENT WET/DRY MEADOWS
- 23 WILLOW DOMINATED RIPARIAN AREAS
- 24 OTHER SHRUB DOMINATED RIPARIAN AREAS
- 26 LAKES, PONDS & RESERVOIRS

PERENNIAL FORB LANDS
- 30 PERENNIAL FORB LANDS (HIGH & MID ELEVATIONS)
- 31 PERENNIAL FORB LANDS (ALPINE & SUB-ALPINE ELEVATIONS)
- 32 PERENNIAL FORB LANDS (MID TO LOW ELEVATIONS)
- 33 ACTIVE LAND SLIDES-WITH LITTLE OR NO VEGETATION COVER

SAGEBRUSH LANDS
- 40 BLACK SAGEBRUSH
- 41 WYOMING BIG SAGEBRUSH
- 42 BASIN BIG SAGEBRUSH
- 43 BIG MOUNTAIN SAGEBRUSH
- 44 SILVER SAGEBRUSH
- 45 RABBIT BRUSH (RUBBER & YELLOW BRUSH)

MOUNTAIN BRUSH LANDS
- 50 MOUNTAIN BRUSH
- 51 OAKBRUSH
- 52 MOUNTAIN MAPLE
- 53 CURLLEAF MOUNTAIN MAHOGANY
- 54 TRUE MOUNTAIN MAHOGANY
- 55 HIGH MOUNTAIN BRUSH
- 56 MANZANITA

CONIFEROUS FOREST LANDS
- 60 WHITE FIR FOREST
- 61 PONDEROSA PINE FOREST
- 62 DOUGLAS FIR FOREST
- 63 SPRUCE-ALPINE-FIR FOREST
- 64 BLUE SPRUCE FOREST
- 65 LIMBER PINE & BRISTLE CONE FOREST

ASPEN FOREST LANDS
- 80 ASPEN FOREST LANDS
- 81 ASPEN SNOWBERRY
- 82 ASPEN BIG SAGEBRUSH
- 83 ASPEN CREEPING BARBERRY
- 84 ASPEN MIXED MOUNTAIN BRUSH
- 85 ASPEN MIXED CONIFER

PINYON JUNIPER WOODLANDS
- 90 PINYON JUNIPER WOODLANDS
- 91 UTAH JUNIPER WOODLANDS
- 92 PINYON WOODLANDS
- 93 ROCKY MOUNTAIN JUNIPER WOODLANDS
- 99 BARREN ROCK OUTCROPS & LEDGES

LEGEND
- MILL FORK LEASE PROPERTY BOUNDARY
- COAL LEASE BOUNDARY
- DEER CREEK MINE PERMIT BOUNDARY
- ● EM-169 DRILL HOLE
- AS-BUILT DISTURBED AREA BOUNDARY

N

DATA CONTENT AND USE DISCLAIMER: The USDA Forest Service, Manti-La Sal National Forest, manages much of the data as a service to users of digital geographic data. The USFS is in no way condoning or endorsing the application of these data for any given purpose. It is the sole responsibility of the user to determine whether or not the data are suitable for the intended purpose. It is also the obligation of the user to apply those data in an appropriate and conscientious manner. The USFS provides no warranty, nor accepts any liability occurring from any incorrect, incomplete, or misleading use of these data. Much of the USFS data are based on and maintained with ARC/INFO software developed by Environmental Systems Research Institute (ESRI). Much of the information presented uses conventions and terms popularized by ARC/INFO and its user community. USFS in no way represents the interests of ESRI nor acts as an agent for them.

Vegetation information recreated with the use of USFS GIS Mapping

CAD FILE NAME/DISK#: 300-1

300-1

PACIFICORP
A MIDAMERICAN ENERGY HOLDINGS COMPANY

DEER CREEK MINE
NORTH RILDA RIDGE
VEGETATION MAP

| DATE | REVISION | BY | CHK |
|---|---|---|---|
| 1/3/2017 | REVISED DEER CREEK MINE PERMIT BOUNDARY | KJL | |
| 2/4/2010 | ADDED AS-BUILT DISTURBED AREA BOUNDARY | KJL | |

DRAWN BY: K. LARSEN
SCALE: 1"=1000'
DATE: MARCH 25, 2009
DRAWING #: 300-1
SHEET 1 OF 1
REV. 2

U-024317

4TH RIGHT

3RD RIGHT

2ND RIGHT

UTAH POWER & LIGHT CO.
FEE

U-06039

SL-051221

U-2810

Jeppson Mine
(1940-50's)

Rominger Mine
(1940-50's)

Leroy/Comfort Mine
(1940-50's)

DEER CREEK MINE PERMIT BOUNDARY

DEER CREEK MINE PERMIT BOUNDARY

DEER CREEK MINE PERMIT BOUNDARY

DEER CREEK MINE PERMIT BOUNDARY

DEER CREEK MINE PERMIT BOUNDARY

DEER CREEK MINE PERMIT BOUNDARY

POST MINING GRAVITY WATER DISCHARGE LINE

USFS

PINYON/JUNIPER/MTN. BRUSH
UNDISTURBED REFERENCE AREA

SAGEBRUSH/GRASS
REFERENCE AREA

PERMANENT MINE DISCHARGE INTO POST MINING GRAVITY WATER DISCHARGE LINE

AS-BUILT FACILITIES DISTURBED AREA = 6.77 ACRES

AS-BUILT FACILITIES DISTURBED AREA = 6.77 ACRES

POST MINING GRAVITY WATER DISCHARGE LINE

POST MINING GRAVITY WATER DISCHARGE LINE

EMERY COUNTY ROAD 306

POST MINING GRAVITY WATER DISCHARGE LINE

END OF COUNTY ROAD 306

RILDA CANYON CREEK

MOUNT NEBO
RIPARIAN REFERENCE POINT

MOUNT NEBO
VEGETATION TEST PLOT

WHITE FIR/ASPEN
REFERENCE AREA

EXISTING TOPSOIL DISTURBED AREA = 0.51 ACRES

DEER CREEK MINE PERMIT BOUNDARY

U-024319

Helco Mine

SL-050862

U-014275

LEGEND

FEDERAL COAL LEASE

DEER CREEK MINE PERMIT BOUNDARY

AS-BUILT DISTURBED AREA

LICENSED PROFESSIONAL ENGINEER
DAN CHRISTENSEN
No. 165651
STATE OF UTAH

CAD FILE NAME/DISK#: 300-2

300-2

PACIFICORP
A MIDAMERICAN ENERGY HOLDINGS COMPANY

DEER CREEK MINE
RILDA CANYON FACILITIES
VEGETATION REFERENCE AREAS

| DATE | REVISION | BY | CHK |
|---|---|---|---|
| 2/4/2010 | ADDED POST MINING GRAVITY WATER DISCHARGE LINE, REVISED DEER CREEK MINE PERMIT BNDRY. | KJL | |
| 2/4/2010 | ADDED AS-BUILT DISTURBED AREA BOUNDARY AND FENCE AROUND TOPSOIL PILE | KJL | |

DRAWN BY: K. LARSEN

SCALE: 1"=200'

DATE: JUNE 16, 2009

DRAWING #: 300-2

SHEET 1 OF 1

REV. 2

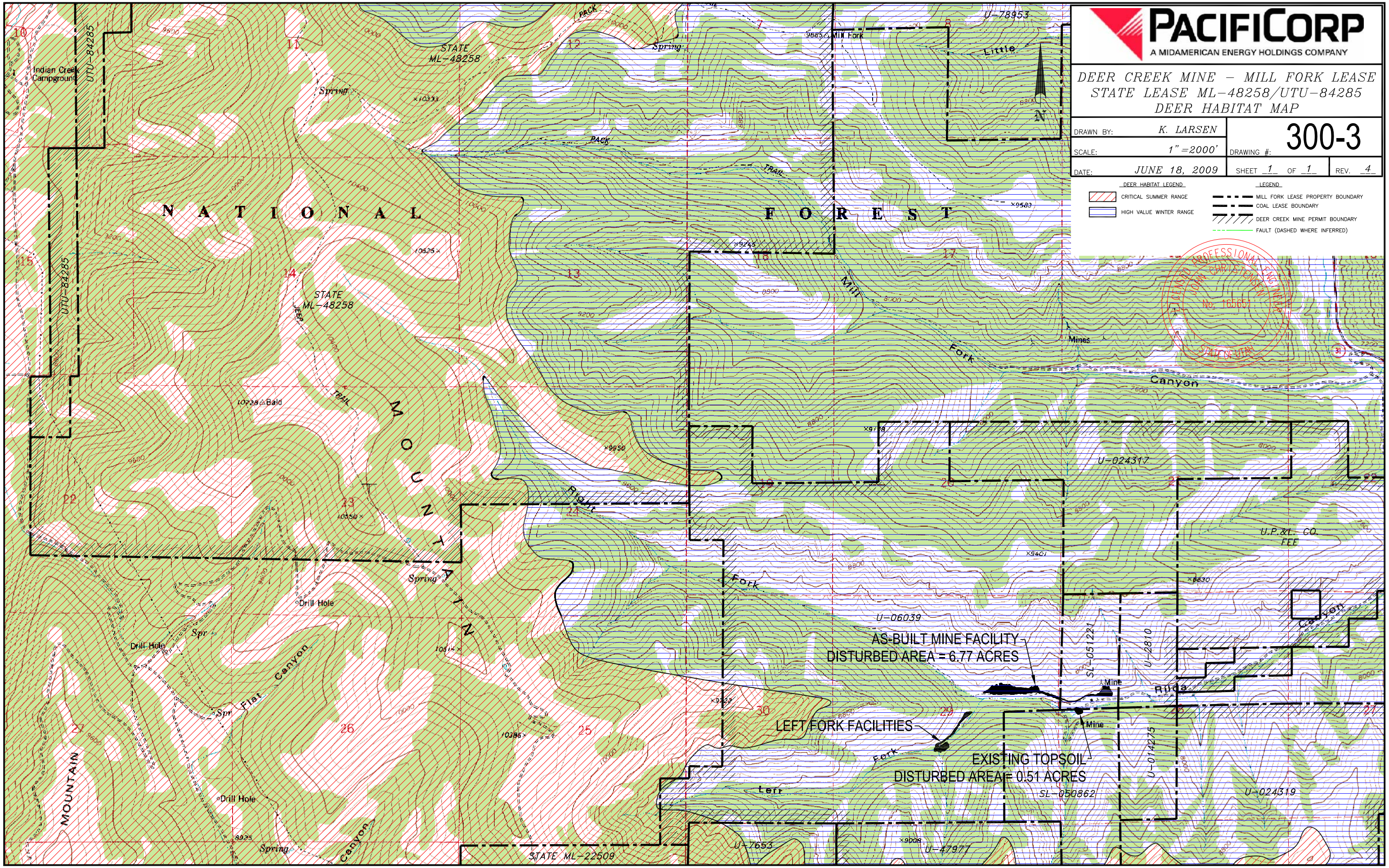
PACIFICORP
A MIDAMERICAN ENERGY HOLDINGS COMPANY
DEER CREEK MINE – MILL FORK LEASE
STATE LEASE ML-48258/UTU-84285
DEER HABITAT MAP
DRAWN BY: K. LARSEN
SCALE: 1" =2000'
DRAWING #: 300-3
DATE: JUNE 18, 2009
SHEET 1 OF 1
REV. 4
DEER HABITAT LEGEND
CRITICAL SUMMER RANGE
HIGH VALUE WINTER RANGE
LEGEND
MILL FORK LEASE PROPERTY BOUNDARY
COAL LEASE BOUNDARY
DEER CREEK MINE PERMIT BOUNDARY
FAULT (DASHED WHERE INFERRED)
LICENSED PROFESSIONAL ENGINEER
JOHN CHRISTENSEN
No. 165651
STATE OF UTAH
AS-BUILT MINE FACILITY
DISTURBED AREA = 6.77 ACRES
LEFT FORK FACILITIES
EXISTING TOPSOIL
DISTURBED AREA = 0.51 ACRES
SL-050862
SL-051221
U-2810
U-014275
U-024317
U-024319
U-06039
U-78953
U-7653
U-47977
U.P.&L. CO.
FEE
STATE ML-48258
STATE ML-22509
UTU-84285
Indian Creek Campground
NATIONAL FOREST
MOUNTAIN
Mill Fork
Little Mill Fork
Mill Fork Canyon
Right Fork
Left Fork
Flat Canyon
Rilda Canyon
Mines
Mine
Drill Hole
Spring
Bald
JEEP TRAIL
PACK TRAIL

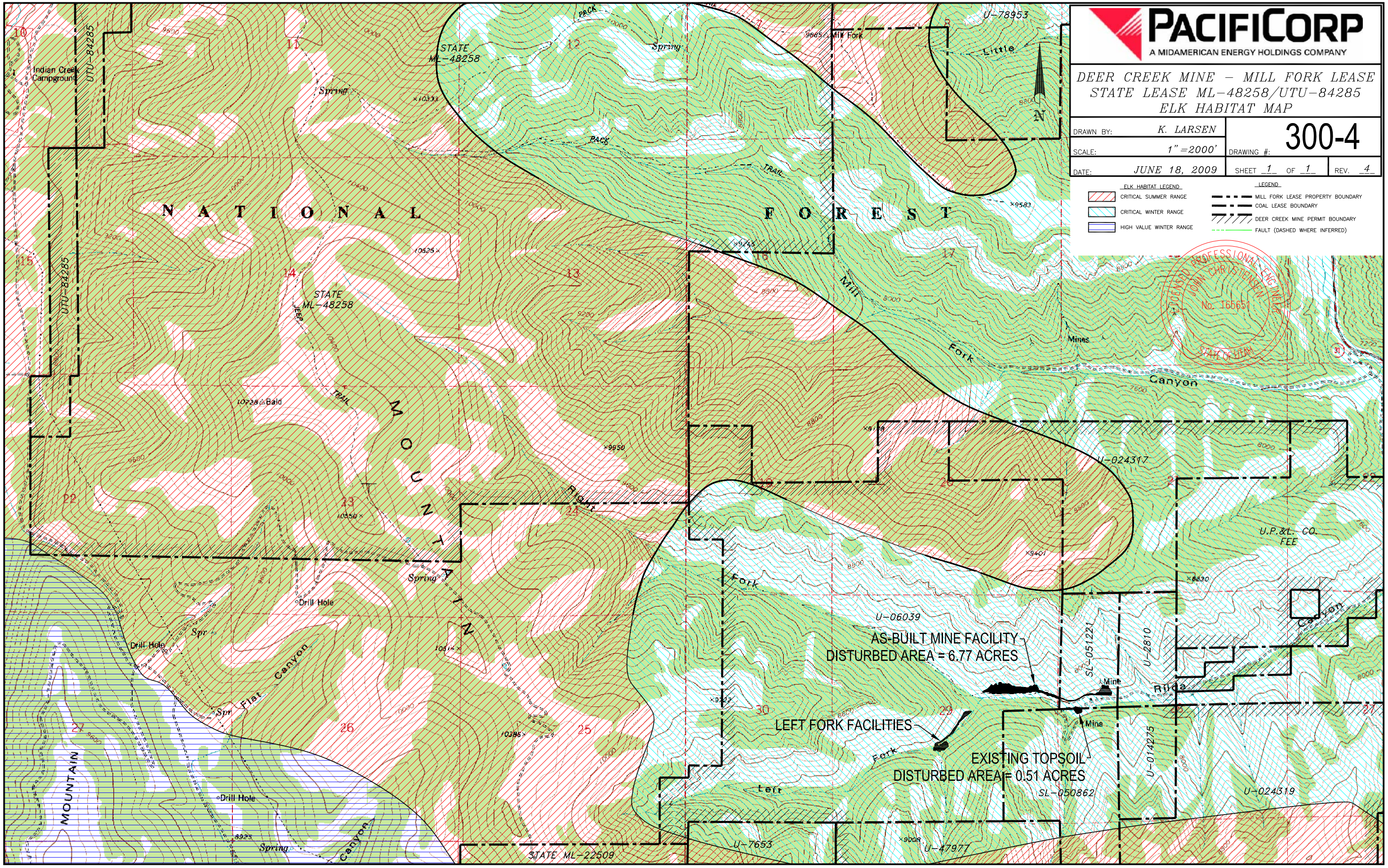
PACIFICORP
A MIDAMERICAN ENERGY HOLDINGS COMPANY
DEER CREEK MINE – MILL FORK LEASE
STATE LEASE ML-48258/UTU-84285
ELK HABITAT MAP
DRAWN BY: K. LARSEN
SCALE: 1" =2000'
DRAWING #: 300-4
DATE: JUNE 18, 2009
SHEET 1 OF 1
REV. 4
ELK HABITAT LEGEND
CRITICAL SUMMER RANGE
CRITICAL WINTER RANGE
HIGH VALUE WINTER RANGE
LEGEND
MILL FORK LEASE PROPERTY BOUNDARY
COAL LEASE BOUNDARY
DEER CREEK MINE PERMIT BOUNDARY
FAULT (DASHED WHERE INFERRED)
LICENSED PROFESSIONAL ENGINEER
JOHN CHRISTENSEN
No. 166651
STATE OF UTAH
AS-BUILT MINE FACILITY
DISTURBED AREA = 6.77 ACRES
LEFT FORK FACILITIES
EXISTING TOPSOIL
DISTURBED AREA = 0.51 ACRES
STATE ML-48258
UTU-84285
U-78953
U-024317
U-06039
SL-051221
U-2810
U-014275
SL-050862
U-024319
U-7653
U-47977
STATE ML-22509
U.P.&L. CO. FEE
NATIONAL FOREST
MOUNTAIN
Indian Creek Campground
Mill Fork
Little Mill Fork
Left Fork
Right Fork
Flat Canyon
Ridge Canyon
Mines
Bald
Spring
Drill Hole
Mine
PACK TRAIL
JEEP TRAIL

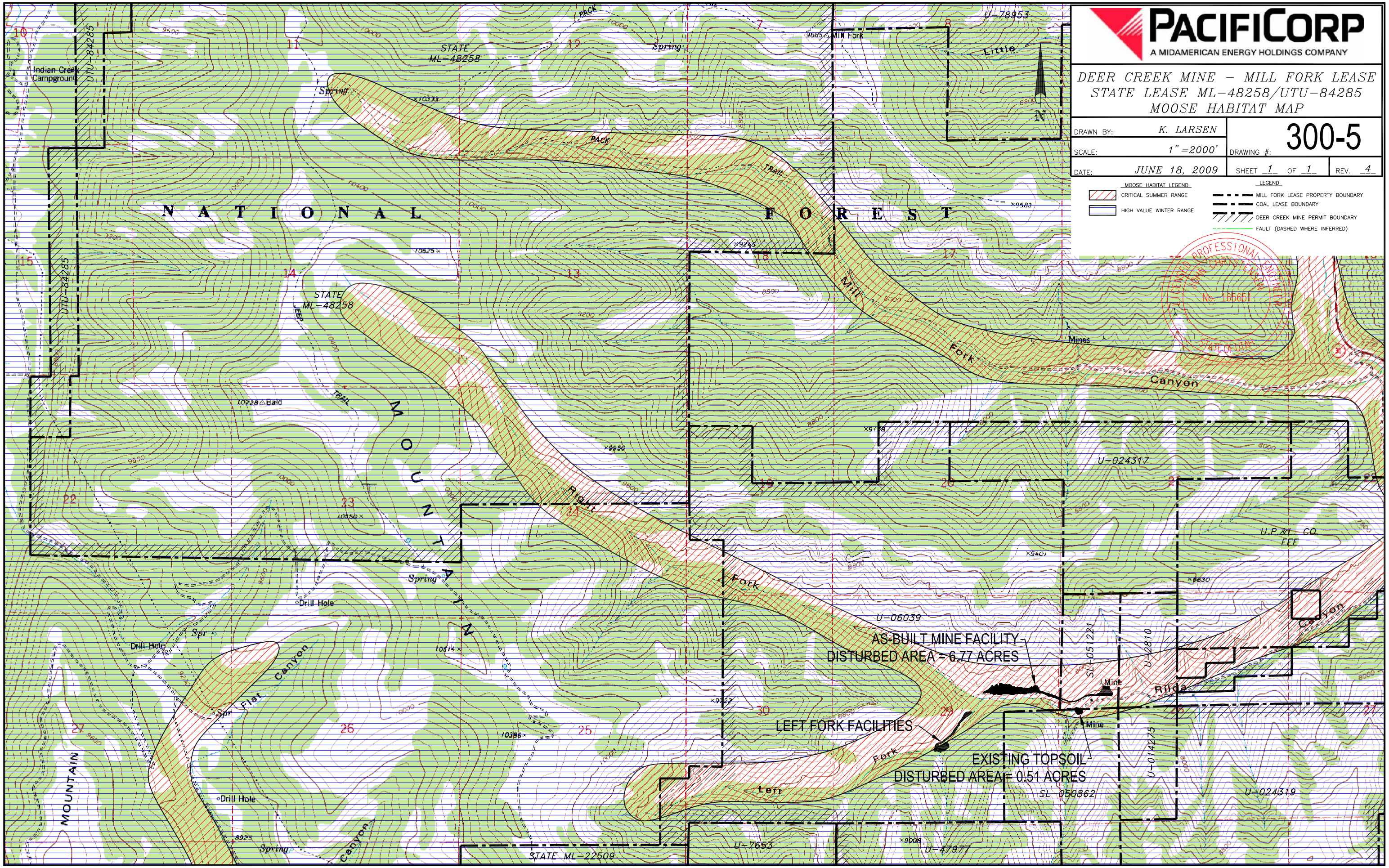
PACIFICORP
A MIDAMERICAN ENERGY HOLDINGS COMPANY
DEER CREEK MINE – MILL FORK LEASE
STATE LEASE ML-48258/UTU-84285
MOOSE HABITAT MAP
DRAWN BY: K. LARSEN
SCALE: 1" =2000'
DRAWING #: 300-5
DATE: JUNE 18, 2009
SHEET 1 OF 1
REV. 4
MOOSE HABITAT LEGEND
CRITICAL SUMMER RANGE
HIGH VALUE WINTER RANGE
LEGEND
MILL FORK LEASE PROPERTY BOUNDARY
COAL LEASE BOUNDARY
DEER CREEK MINE PERMIT BOUNDARY
FAULT (DASHED WHERE INFERRED)
LICENSED PROFESSIONAL ENGINEER
No. 166651
STATE OF UTAH
N
NATIONAL FOREST
MOUNTAIN
STATE ML-48258
UTU-84285
Indian Creek Campground
U-78953
Little
Mill Fork
Mines
Canyon
U-024317
U.P.&L. CO. FEE
U-06039
AS-BUILT MINE FACILITY
DISTURBED AREA = 6.77 ACRES
SL-051221
U-2810
Mine
Ridge
LEFT FORK FACILITIES
EXISTING TOPSOIL
DISTURBED AREA = 0.51 ACRES
SL-050862
U-014275
U-024319
U-7653
U-47977
STATE ML-22509
Flat Canyon
Drill Hole
Spring
Trail
Pack
Right Fork
Left Fork
Bald

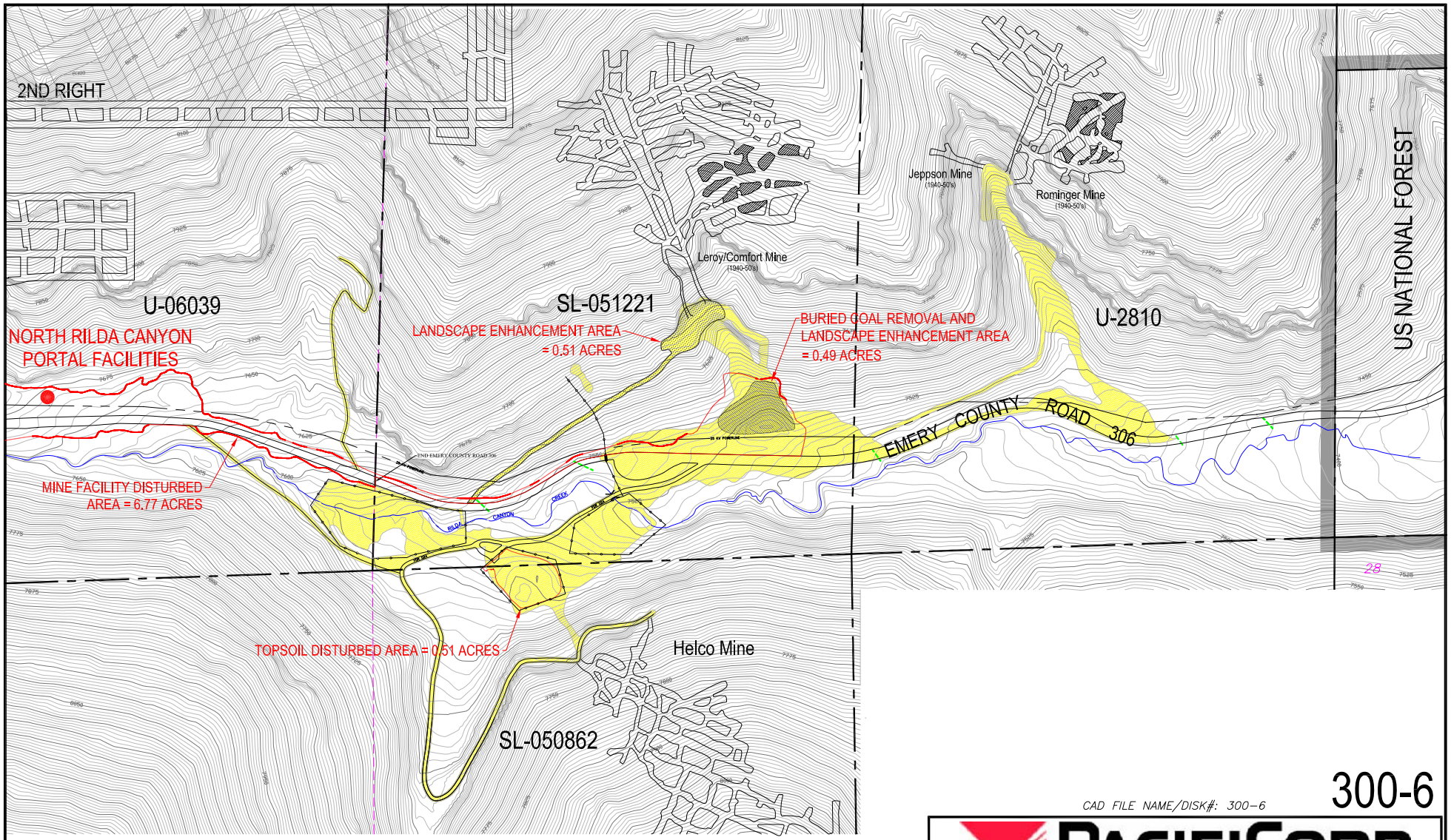


LEGEND

- FEDERAL COAL LEASE
- DEER CREEK MINE PERMIT BOUNDARY
- PRE-DISTURBED AREA (AML RECLAIMED 1988)
- BURIED COAL REMOVAL AND LANDSCAPE ENHANCEMENT AREA
- DISTURBED BOUNDARY

LICENSED PROFESSIONAL ENGINEER
JOHN CHRISTENSEN
No. 165651
STATE OF UTAH

300-6

CAD FILE NAME/DISK#: 300-6

PACIFICORP
A MIDAMERICAN ENERGY HOLDINGS COMPANY

RILDA CANYON FACILITIES
BURIED COAL REMOVAL AND
LANDSCAPE ENHANCEMENT

| | | | |
|---|---|---|---|
| DRAWN BY: | K. LARSEN | 300-6 | |
| SCALE: | 1" =400' | DRAWING #: | |
| DATE: | JANUARY 11, 2017 | SHEET 1 OF 1 | REV. ___ |

# PacifiCorp

# Deer Creek Mine

# C/015/0018

**Amendment to Add a Post-Mining Water Discharge at Rilda Canyon Portals, Permit Area Change to Include Discharge Pipeline Route and Potential Treatment Facility Area, PacifiCorp, Deer Creek Mine, C/015/0018, Emery County, Utah**

**<u>Volume 11, R645-301-400 Land Use and Air Quality, Maps Tab</u>**

**Replace Map 400-1**

U-06039

U-06039

AS-BUILT FACILITIES DISTURBED AREA = 6.77 ACRES

NORTH RILDA CANYON
PORTAL FACILITIES

SL-051221

Leroy Mine

Jeppson Mine

Rominger Mine

U-2810

DEER CREEK MINE PERMIT BOUNDARY

DEER CREEK MINE PERMIT BOUNDARY

DEER CREEK MINE PERMIT BOUNDARY

DEER CREEK MINE PERMIT BOUNDARY

DEER CREEK MINE PERMIT BOUNDARY

EMERGENCY
SEDIMENTATION POND

END OF COUNTY ROAD 306

AS-BUILT PIPELINE

EMERY COUNTY ROAD 306

RILDA CANYON

29

28

U-024319

EXISTING TOPSOIL DISTURBED AREA = 0.51 ACRES

Helco Mine

SL-050862

U-014275

LEFT FORK
RILDA CANYON
FAN FACILITIES

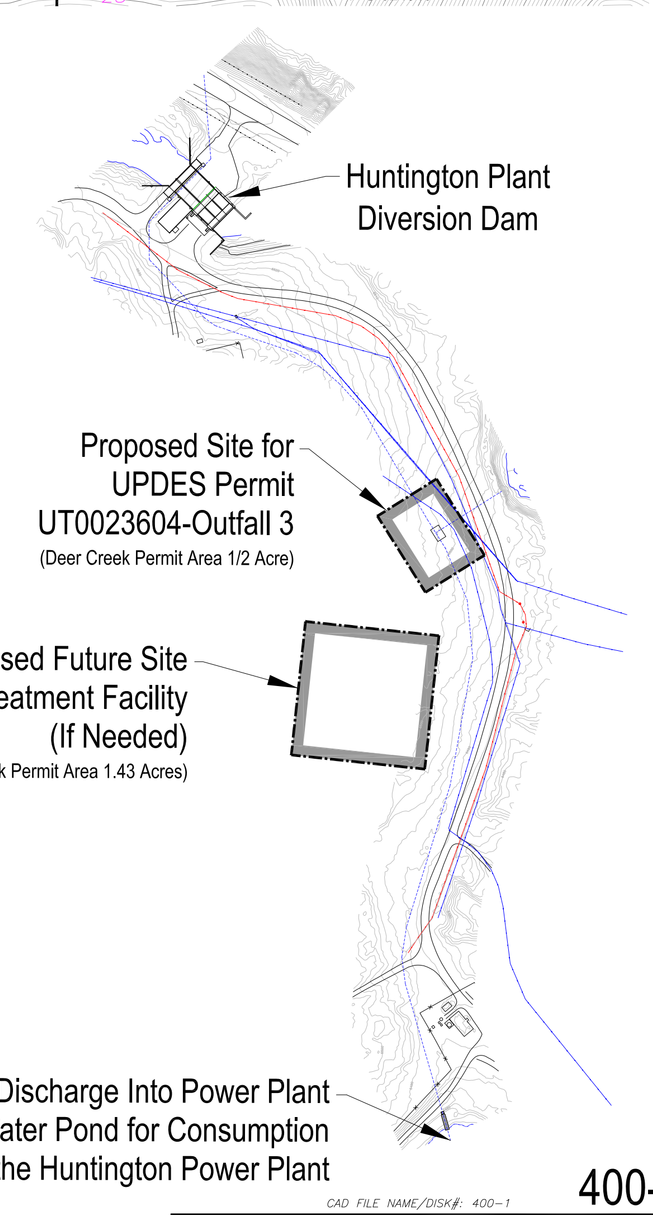


LEGEND

- FEDERAL COAL LEASE
- PRE-DISTURBED AREA (AML RECLAIMED 1988)
- DEER CREEK MINE PERMIT BOUNDARY

400-1

CAD FILE NAME/DISK#: 400-1

PACIFICORP
A MIDAMERICAN ENERGY HOLDINGS COMPANY

DEER CREEK MINE
RILDA CANYON
HISTORICAL MINING

| DATE | REVISION | BY | CHK |
|---|---|---|---|
| 1/3/2017 | ADDED POST MINING WATER DISCHARGE LINE REVISED DEER CREEK MINE PERMIT BOUNDARY | KJL | |
| 2/4/2010 | ADDED AS-BUILT DISTURBED AREA BOUNDARY AND NORTH RILDA CANYON PORTAL FACILITIES | KJL | |

DRAWN BY: K. LARSEN
SCALE: 1"=200'
DATE: JUNE 16, 2009
DRAWING #: 400-1
SHEET 1 OF 1
REV. 2

# PacifiCorp

# Deer Creek Mine

# C/015/0018

**Amendment to Add a Post-Mining Water Discharge at Rilda Canyon Portals, Permit Area Change to Include Discharge Pipeline Route and Potential Treatment Facility Area, PacifiCorp, Deer Creek Mine, C/015/0018, Emery County, Utah**

**<u>Volume 11, R645-301-500 Engineering</u>**

**Replace entire text section**

# R645-301-500 ENGINEERING SECTION

## TABLE OF CONTENTS

**R645-301-510 INTRODUCTION ..... 5**

*R645-301-511 GENERAL REQUIREMENTS* ..... 6
*R645-301-512 CERTIFICATION* ..... 6
*R645-301-513 COMPLIANCE WITH MSHA REGULATIONS AND MSHA APPROVALS* ..... 7
*R645-301-514 INSPECTIONS* ..... 7

**R645-301-520 OPERATION PLAN ..... 8**

*R645-301-521 INTRODUCTION* ..... 8
*R645-301-521.110 Previously Mined Areas* ..... 8
*R645-301-521.122 Man Made Features* ..... 8
*R645-301-521.123 Public Road* ..... 9
*R645-301-521.124 Location of Existing Coal Waste* ..... 9
*R645-301-521.130 Landowners and Right of Entry and Public Interest Maps* ..... 9
*R645-301-521.140 Mine Maps and Permit Area Maps* ..... 9
*R645-301-521.150 Land Surface Configuration Maps* ..... 9
*R645-301-521.170 Transportation Facilities* ..... 12
*R645-301-521.180 Support Facilities* ..... 12
*R645-301-521.200 Signs and Markers Specifications* ..... 15
*R645-301-522 COAL RECOVERY* ..... 15
*R645-301-523 MINING METHODS* ..... 21
*R645-301-524 BLASTING AND EXPLOSIVES* ..... 23
*R645-301-524.100 Blaster Certification* ..... 23
*R645-301-524.200 Blast Design* ..... 24
*R645-301-524.300 Blast Survey* ..... 24
*R645-301-524.400 Blast Schedule* ..... 24
*R645-301-525 SUBSIDENCE CONTROL PLAN* ..... 24
*R645-301-525.100 Subsidence Damage Probability Survey* ..... 24
*R645-301-525.200 Protected Areas* ..... 26
*R645-301-525.300 Subsidence Control* ..... 26
*R645-301-525.400 Subsidence Monitoring Plan* ..... 28
*R645-301-525.500 Repair of Damage* ..... 30
*R645-301-525.700 Public Notice* ..... 31
*R645-301-526 MINE FACILITIES* ..... 32
*R645-301-526.116.1 Mining Within 100 Feet of Public Road* ..... 34
*R645-301-526.116.2 Relocating a Public Road* ..... 34
*R645-301-526.200 Utility Installation and Support Facilities* ..... 35
*R645-301-527.100 Road Classification* ..... 36
*R645-301-528.330 Non-Coal Waste* ..... 38
*R645-301-529 MANAGEMENT OF MINE OPENINGS* ..... 38

**R645-301-530 OPERATIONAL DESIGN CRITERIA AND PLANS ..... 39**

*R645-301-531 GENERAL* ..... 39
*R645-301-532 SEDIMENT CONTROL* ..... 39
*R645-301-532.200 Stabilization* ..... 39
*R645-301-533 IMPOUNDMENTS* ..... 39

*R645-301-533.200 Foundations* ..... *40*
*R645-301-533.300 Side Slope Protection* ..... *40*
*R645-301-533.700 Plans* ..... *40*
*R645-301-534 ROADS* ..... 40
*R645-301-535 SPOIL* ..... 42
*R645-301-536 COAL MINE WASTE* ..... 42
*R645-301-537 REGRADED SLOPES* ..... 42

**R645-301-540 RECLAMATION PLANS ..... 42**

*R645-301-541 GENERAL* ..... 42
*R645-301-541.300 Structure Removal* ..... *43*
*R645-301-542 NARRATIVES, MAPS, AND PLANS* ..... 45
*R645-301-542.600 Roads* ..... *45*

**R645-301-550 RECLAMATION DESIGN CRITERIA AND PLANS ..... 45**

*R645-301-551 CASING AND SEALING UNDERGROUND OPENINGS* ..... 45
*R645-301-552 PERMANENT FEATURES* ..... 47
*R645-301-553 BACKFILLING AND GRADING* ..... 47
*R645-301-553.100 Disturbed Areas* ..... *49*
*R645-301-553.130 Slope Stability Analysis* ..... *49*

**R645-301-560 PERFORMANCE STANDARDS ..... 50**

**MAPS**


| | | |
|---|---|---|
| 500-1 | (1 of 3)Pre-Disturbance Topography (1"=300') | |
| | (2 of 3)Pre-Disturbance Aerial Photo | |
| | (3 of 3)Pre-Disturbance Topography (1"=100') | |
| 500-2 | Sequence of Construction | |
| 500-3 | Surface Facilities | |
| 500-4 | (1 of ~~5~~4) | Facilities Cross-Sections |
| | (2 of ~~5~~4) | Facilities Cross-Sections |
| | (3 of ~~5~~4) | Topsoil Storage Cross-Sections |
| | ~~(4 of 5)~~ | ~~Subsoil/Construction Fill Cross-Sections~~ |
| | (~~5 of~~ 5 4 of 4) | Sediment Pond Cross-Sections |
| 500-5 | Final Reclamation Topography | |


**FIGURES**


| | |
|---|---|
| Figure R645-301-500a | Typical Main Entry and Panel Development |
| Figure R645-301-500b | Typical Longwall Panel Retreat |
| Figure R645-301-500c | Emery County Road #306 Through Rilda Canyon Facilities Area |
| Figure R645-301-500d | ~~Typical Portal Seal~~ Concrete Plug Detail |


**LIST OF APPENDICES** (Refer to Volume 11: Appendix Volume)


| | |
|---|---|
| Appendix A | Ground Stability Analysis: 4/5th North Mains Crossing of the Right Fork of Rilda Canyon |
| Appendix B | Correspondence Letters / Agreements / Approvals |
| Appendix C | Environmental Assessment for Deer Creek Mine North Rilda Extension |
| Appendix D | Decision Notice and Finding of No Significant Impact |
| Appendix E | DOGM Letter - Consent to Conduct Mining |
| Appendix F | North Rilda Canyon Facilities Geotechnical Investigation |
| Appendix G | Rilda Canyon Road - Change Order #1 (Emery County Road Design)<br>Rilda Canyon Facilities Site Photos |
| Appendix H | Design Drawings – Rilda Canyon Facilities Phase I, 2006 |

Appendix I Design Drawings – Deer Creek Mine Water Relief Pipeline 2016 – Rilda Canyon

**Note: The Deer Creek Mine ceased production in January 2015. The southern portion of the mine was separated (by the construction of the 3rd North cross-cut 138 seals) from the Mill Fork Area and the portals at the Deer Creek canyon facility and the ventilation portals at the 9th East breakouts were sealed and backfilled in April 2015. The only active portion of the Deer Creek Mine is accessed through the Left Fork portals and Rilda Canyon Portal Facilities. Ventilation and water pumping activities are the only operations occurring in the North Rilda and Mill Fork areas of the underground mine. The 1st Right Fan was taken off-line in March 2015. The Left Fork fan is the only operating fan for the Deer Creek Mine. All information pertaining to the operations of the mine, coal recovery, mining methods, and subsidence control have been retained for a historic reference.**

# R645-301-510 INTRODUCTION

The Engineering Section provided within this permit application contains general descriptions, information, and design criteria for both operation and reclamation of the facilities associated with the North Rilda Area and Mill Fork Area mining operations. Most plans, maps and designs for the North Rilda Area operations (Left Fork Fan Facilities) can be found in Volume 2 of the Deer Creek Mining and Reclamation Plan (MRP). A portion of these facilities are detailed below. All plans, maps and designs associated with the Mill Fork Area operations (Rilda Canyon Portal Facilities) are detailed in the following sections. In general, the Left Fork Fan Facilities will be discussed first followed by the Rilda Canyon Portal Facilities.

Coal mining has occurred since 1946 in Deer Creek Canyon, a tributary of Huntington Canyon in Emery County, Utah. Utah Power & Light Company (now PacifiCorp) purchased the operations and coal leases from Peabody Coal Company in 1977. The Deer Creek Mine portal, mine personnel, and its coal handling facilities are located in Deer Creek Canyon.

Mining in the North Rilda Area produced coal from both the Blind Canyon and Hiawatha coal seams. Approximately 23 million tons of minable coal was mined from the North Rilda Area during the past few years. A portion of the North Rilda Area will be used to provide access from the Rilda portals to the Mill Fork Lease area. Refer to Volume 5, Plates 3-6, Life of Mine Plan / 5 Year Increments - Blind Canyon Seam, and 3-7, Life of Mine Plan / 5 Year Increments - Hiawatha Seam.

Because of the need to expand the mining operations to the northwest (Mill Fork State Lease #48258), surface facilities are required in Rilda Canyon. This includes construction of the mine entries, facilities pad, fan, ancillary facilities, sediment control structures, and soil storage piles. No coal processing or coal transportation facilities will be utilized at these facilities. All mined coal from the extended Deer Creek Mine will continue to be transported through the Deer Creek Canyon portals and processed at these facilities. The processed coal is then transported via beltline to the Huntington Power Plant. The Huntington Power Plant is owned and operated by PacifiCorp.

A variety of engineering principles and techniques are applied in the Deer Creek Mine operation. Principles of engineering employed are those associated with standard prudent mine engineering practices. More detail about the methodologies used to plan the coal mining activities for long-range goals at the Deer Creek Mine and the use of computer assisted models can be found in Volume 2, Part 3 of the MRP.

## *R645-301-511 General Requirements*

This document includes the general requirements to meet the State of Utah's regulatory requirements to mine coal in the North Rilda Area and operate surface facilities in Rilda Canyon as part of the Deer Creek Mine. The surface facility operation plan includes information or references the existing mine plan when appropriate. The potential impact to the environment is also addressed. As reflected by its format, much of the current Deer Creek MRP was written prior to the State's R645- Rules. This plan attempts to follow the Rules general format, yet allow it to also be consistent with the existing MRP.

**Rilda Canyon Portal Facilities and Operations:** Early mining operations, prior to PacifiCorp's presence in the canyon, occurred near the surface facilities (see Map 400-1). These operations include the Rominger (Ferrell) Mine, Jeppson Mine, Leroy (Comfort) Mine, and Helco Mine (refer to site photos A through C in Volume 11 Appendix Volume - Engineering: Appendix G). These mines were active during the 1940's and early 1950's. Abandoned Mine Lands (AML) reclaimed these mines in 1988. Much of the the disturbed surface area of the Rilda Canyon facilities occurs west of the Leroy, Rominger, and Jeppson mines disturbed area. However, a portion of the disturbance, namely the sediment pond (Leroy mine site) and topsoil storage (Helco mine site) occurs in these previously disturbed areas.

Surface facilities in Rilda Canyon include the existing mine fan, substation and water supply in the Left Fork of the canyon, and surface related facilities associated with the Rilda Canyon Portal Facilities. These facilities include (but not limited to) access and mine fan portals, exhaust fan, facilities pad, fuel dock, rock dust tank, sediment pond, sediment basin, waste and waste rock storage bins, substation, MCC building, drainage systems, and covered storage buildings. Refer to Section R645-301-521 for a detailed description of all surface facilities of the Rilda Canyon Portal Facilities. Also refer to Volume 12 of the Deer Creek MRP for detailed information of the mining plan, mining production, and mining methods that will be utilized within the Mill Fork Lease.

## *R645-301-512 Certification*

Applicable cross sections and maps have been included or referenced within this document. They have been prepared by, or under the direction of, and certified by a qualified, registered, professional engineer, geologist, or land surveyor, with assistance from experts in related fields such as hydrology, geology, and biology.

## *R645-301-513 Compliance with MSHA Regulations and MSHA Approvals*

All structures that are constructed to allow mining in the North Rilda Area and the Mill Fork Lease will comply with all regulations, whether at the local, State, or Federal level.

There are no impoundments or sedimentation ponds that meet size or other qualifying criteria of MSHA, 30 CFR Part 77. All impoundments or sedimentation ponds utilized by operations in Rilda Canyon meet the requirements outlined in the Utah Coal Regulations.

Underground development waste, coal processing waste and excess spoil will continue to be disposed of in accordance with plans approved by DOGM and MSHA. There are no plans to return coal processing wastes to the underground workings at Deer Creek Mine. All coal is shipped via beltline through the Deer Creek Canyon portals.

There are no plans to construct refuse piles within the facilities area in Rilda Canyon. All refuse that is transported through the Rilda Canyon portals is temporarily stored in a refuse bunker. As the bunker fills to capacity, the refuse is transported by truck to the Deer Creek waste rock site in Huntington Canyon for permanent storage.

Each shaft, drift, adit, tunnel, exploratory hole, entryway or other opening to the surface from underground will be capped, sealed, backfilled or otherwise properly managed consistent with MSHA, 30 CFR 75.1771. Refer to Section R645-301-550 Reclamation Design Criteria and Plans below.

PacifiCorp proposes to collect or divert storm water runoff from the mine facilities area (refer to R645-301-521-180 Support Facilities for details). Collected runoff is diverted through a series of ditches and pipes to the sediment basin. As this basin fills to capacity, runoff will over flow and divert to the sediment pond located in the Leroy Mine area. Undisturbed runoff is diverted around or under the facilities through ditches and pipes into the Rilda Creek.

## *R645-301-514 Inspections*

All appropriate engineering inspections and reports will be conducted by a qualified registered professional engineer or other qualified professional specialist under the direction of the professional engineer during the construction, operation, and reclamation activities of mining.

### *R645-301-515 Reporting and Emergency Procedures*

In the event any potential hazard exists, develops, or occurs in association with slides and/or impoundment structures which may have an adverse effect on the health and safety of the public, property, or the environment, DOGM will be promptly notified. The operator commits to comply with any remedial measures required to protect and ensure the health and safety of the public.

The Deer Creek Mine facility conducts routine inspections on a weekly basis. Should a hazard exist or occur, personnel have been instructed to notify the Mine Manager, who will coordinate and implement any emergency procedures and remedial measures to be taken.

Where temporary cessation of operations is necessary for a period beyond 30 days, the applicant will submit the proper notification and information required of R645-301-515.300 to DOGM.

## R645-301-520 OPERATION PLAN

### *R645-301-521 Introduction*

The plan for the mining in the North Rilda Area includes or references maps, cross sections, narratives, descriptions, and calculations indicating how the relevant requirements are met. The plan describes and identifies the lands subject to coal mining and reclamation activities over the estimated life of the operations and describes the size, sequence, and timing of the sub-areas for which it is anticipated that individual permits for mining will be sought. For review of the mining plan of the Mill Fork Lease area, refer to Volume 12, Mill Fork Lease, ML-48258.

**R645-301-521.110 Previously Mined Areas**

Areas previously mined in the Rilda Area are presented on Map 500-1, Pre-Disturbance Topography, in the Maps Section. These areas include the Leroy Mine, Rominger Mine, Jeppson Mine, and Helco Mine. Mining occurred in these mines in the 1940's and 1950's. Abandoned Mine Lands reclaimed these sites in 1988. Extents of mine workings of the said mines are included on Map 500-1. Photos of all previously mined areas in Rilda Canyon area illustrated in Volume 11 Appendix Volume - Engineering: Appendix G. All openings have been backfilled by AML during reclamation activities.

**R645-301-521.122 Man Made Features**

Rocky Mountain Power owns and operates a 25 KV electrical power transmission line that supplies electrical power to the Left Fork fan facilities. This line (refer to Map 500-3), prior to construction, was located on the north side of EC#306. This transmission line required relocation to south side of the then proposed Rilda Canyon Portal Facilities. Energy West coordinated with Rocky Mountain Power to establish a new right of way for the transmission line and completed this relocation activity in May 2005.

Water wells exist in Rilda Canyon near the disturbed area boundary. These wells were developed in 1989 to evaluate the hydrologic characteristics of the alluvium for the North Emery Water Users Special Service District's spring collection system (also adjacent to the disturbed area boundary). The wells were drilled through the alluvium to bedrock. Monthly monitoring (level only) is conducted on the wells. Refer to Map 500-3 for location. Refer to Volume 9 for complete discussion. Refer to photo's D through F in Volume 11 Appendix Volume - Engineering: Appendix G.

**R645-301-521.123 Public Road**

Emery County Road #306 runs approximately 3.0 miles from the Huntington Canyon road, Highway 31, to the turnaround area in the Left Fork of Rilda Canyon. A portion of this road is located within the disturbed area boundary of the Rilda Canyon Portal Facilities (refer to maps 500-1, 500-3, and Figure R645-301-500c). Energy West has worked with Emery County Special Services District #1 (ECSSD#1) and the Emery County Commission to develop an agreement to suspend public use of that portion of EC#306 that runs through the facilities area. This agreement is located in Volume 11 Appendix Volume - Engineering: Appendix B. Refer to Volume 11 Appendix Volume - Engineering: Appendix G for photos of the suspended portion of the road.

**R645-301-521.124 Location of Existing Coal Waste**

As mentioned above, previous mining occurred in Rilda Canyon at the Leroy Mine, Rominger Mine, Jeppson Mine, and Helco Mine. Map 500-1 shows predisturbed areas associated with these mines. At reclamation of these mines, coal waste material was buried on-site. It is not known to what extent or volume waste coal is buried throughout the area.

**R645-301-521.130 Landowners and Right of Entry and Public Interest Maps**

Refer to Supplemental Volume (Legal and Financial Information) for description of lands containing surface and subsurface ownership. Refer to Volume 4 Maps 1-1 and 1-2 for locations of ownership.

**R645-301-521.140 Mine Maps and Permit Area Maps**

The boundaries of the North Rilda Area to be affected for the life of coal mining and reclamation activities are found on Map DU1688 in Volume 11 Appendix Volume - Engineering: Appendix A. Refer to Volume 12, Mill Fork Lease ML-48258 to review all proposed affected areas and discussion of subsidence in the Mill Fork Lease. Subsidence for the North Rilda Area is discussed below in R645-301-525.

**R645-301-521.150 Land Surface Configuration Maps**

Map 500-1 illustrates the topography prior to construction of the Rilda Canyon Portal Facilities. Contours extend at least 100 feet beyond the area of each disturbance.

**R645-301-521.160 Maps and Cross Sections for the Constructed Features**

Typical construction sequencing is presented on Map 500-2 in the Maps Section. This map shows the construction sequences that have been used to construct the facilities. Plan views of the existing land surface configuration for the coal mining and reclamation operations in the North Rilda Area are found on maps 500-3. Map 500-3 shows a plan view of the existing disturbance for the 6.77 acre mine facility site as well as the location of the topsoil storage area~~s~~. The as-built design for the topsoil pile shows a fenced area of approximately 0.51 acres. The total volume of the pile is approximately 7,862 cubic yards (5,725 cubic yard topsoil and 2,137 cubic yard of substitute topsoil. Refer to the table in ***R645-301-232 Topsoil and Subsoil Removal*** for soil pile capacity.

The facilities pad was developed by cutting and/or filling the surface to create an earthen structure that supports the buildings and storage areas. The facilities pad was cut to the bedrock on the north side of the pad. This bedrock stretches the entire length of the disturbed area boundary and is nearly vertical. The mass balance Table 500-1 below illustrates the cuts and fills required for constructing the facility pad and sedimentation pond. Maps 500-4, 1 of 4 and 2 of 4 show the cross-sections through the facilities area. Map 500-4, 3 of 4 shows the cross-sections through the topsoil pile. Map 500-4, 4 of 4 shows the cross-sections through the sediment pond. Cross-sections are spaced on 50 foot centers and are identified by interval and distance from the starting point (i.e. 15+00, 15+50, etc.). Carlson Software was utilized to calculate the total volumes of cuts and fills. However, as indicated in Table 500-1, there are instances (i.e. coal material removed from the site, void in boulder fills, etc.) that cause inaccuracies of the cut and fill volumes. As shown in the table, those inaccuracies are accounted for and volumes have been adjusted accordingly.

Table 500-1: As-Built Mass Balance for Rilda Portal Facilities

| | | Area (sf) | Volume (cy) |
|---|---|---|---|
| **Faclilities/Pond Area** | | | |
| 1 | Total Cut | | 41,284 |
| 2 | Total Fill** | | 29,522 |
| **Topsoil Pile** | | | |
| 3 | Total Cut | | - |
| 4 | Total Fill*** | | 7,862 |
| **Concrete Volume**** (removed at reclamation)** | | | |
| 5 | Concrete Pad (Avg. 9" thick) | 69,650 | 1,935 |
| 6 | Fan Pad (Avg. 5' thick) | 6,000 | 1,111 |
| 7 | MCC Building (4' crawl space under building) | 400 | 59 |
| 8 | Total Volume to be Reduced from Item 2 | | 3,105 |
| **Hard Armor Areas******* | | | |
| 9 | Hilfiker Wall | 8,400 | 249 |
| 10 | Boulder Pile | 20,350 | 603 |
| 11 | Sediment Basin Outslope | 4,020 | 119 |
| 12 | Sediment Pond Outslope | 4,375 | 130 |
| 13 | Total Volume to be Reduced from Item 2 | | 1,101 |
| **Coal/Coal Waste Removed from Area** | | | |
| 14 | Coal | | 290 |
| 15 | Coal Waste | | 2,000 |
| 16 | Total Volume to be Reduced from Item 2 | | 2,290 |
| **Culverted Areas (Voids caused by buried culverts)** | | | |
| 17 | UC-1: Area = 1.77 $ft^2$, Length = 72 ft. | 1.77 | 127 |
| 18 | UC-2: Area = 1.77 $ft^2$, Length = 148 ft | 1.77 | 262 |
| 19 | DC-1: Area = 1.77 $ft^2$, Length = 391 ft. | 1.77 | 692 |
| 20 | DC-2: Area = 1.77 $ft^2$, Length = 198 ft. | 1.77 | 350 |
| 21 | Portion DC-3: Area = 1.77 $ft^2$, Length = 142 ft. | 1.77 | 251 |
| 22 | Total Volume to be Reduced from Item 2 | | 1,683 |
| **Mass Balance Calculations** | | | |
| | Total Cut Items(1-(4+8+13+16+22) | | 25,396 |
| | Total Fill (Item 2) | | 26,373 |
| | Difference | | (977) |
| | % Difference | | -4% |

**NOTES:**

* As-built volumes calculated utilizing aerial survey data and Carlson Software.

** Includes approximately 18,100 cy of imported rock material for construction of Hilfiker wall.

*** Includes both topsoil quantities (approx. 5,725 cy) and substitute topsoil quantities (approx. 2,137 cy) that is segregated and stored at the topsoil pile storage location (Map 500-3). These volumes were hand surveyed in the field. Item 4 was calculated using Carlson Software.

**** Carlson Software calculates volumes according to surface elevations. Concrete is, therefore, part of the cut/fill volumes and must be subtracted from total cut (Item 1).

***** Boulders excavated during construction were utilized as a hard armor BMP or stored. When calculating the cut/fill volumes, voids in the boulders are not considered. For estimation purposes, a 40% void volume is subtracted from the total cut volume for a depth of 2 feet.

****** This difference is probably the result of the importation of fill specified for construction.

Cross-sections associated with the stations on Map 500-3 are shown on Map 500-4. These cross-sections illustrate pre-existing contours, post-construction contours, and reclamation contours. The Carlson Software data is shown on Map 500-3. Reclamation of the facilities is discussed later in this chapter.

Constructed buildings and facilities are shown on Map 500-3. These constructed facilities have been included in the performance bond calculations. Refer to R645-301-800: Bonding, for detailed information.

**R645-301-521.170 Transportation Facilities**
Primary and secondary roads are described in detail in Section R645-301-527.

**R645-301-521.180 Support Facilities**
As-built drawings of the Rilda Canyon Portal Facilities are found in Volume 11, Appendix Volume 11A - Engineering, Appendix H. Surface facilities in Rilda Canyon are located at two locations; 1) Left Fork of Rilda Canyon and 2) at the forks of Rilda Canyon.

**Left Fork of Rilda Canyon:** This facility includes an access road and a pad area which supports two portals, a substation, power line, fan, water storage tank, and pumphouse. Topsoil removed prior to construction of the site is also stored within the permit area of the Left Fork Rilda Canyon fan facilities. Additional information about this facility is provided in Volume 2, Part 3 and Volume 5, Map 3-9A and Map 3-9B.

**Rilda Canyon Portal Facilities:** This facility is located at the forks of Rilda Canyon and includes the following: Access and Mine Fan Portals, Mine Fan, Facilities Pad, Fuel Dock, Rock Dust Tank, Waste, Rock and Waste Rock Storage Bins, Covered Storage Buildings, Substation, Lift Station, Sediment Basin, Sediment Pond, and Drainage Systems (see Map 500-3 in this chapter). A short discussion of each facility is presented below:

**Access and Mine Fan Portals**: During the development of the Rilda Canyon Portal Facilities two separate surface breakouts were constructed; 1) Mine (Intake) Access, and 2) Blowing Mine Fan opening. Both portals were developed [from underground] as rocks slopes through the upper member of the Star Point Sandstone (Spring Canyon Member) from the portal facility area to an interception point in the Hiawatha Coal Seam. Methods used to construct this portal and tunneled slope utilized conventional drill and shoot methods. The dimensions of the portal are approximately 20' x 9' rectangular opening. The fan is constructed at the west portal. Mine equipment and men will use the east portal to access the northwestern part of the Deer Creek Mine.

**Mine Ventilation Fan** - The fan installation at the Rilda Canyon portal facility is a dual, parallel fan arrangement. The fans are located side-by-side on concrete foundation. The fans are installed in a blowing configuration, taking in outside air and forcing it into the mine. Only one fan will operate at a time. Each fan is driven by an electrical motor. Back-up power is supplied by a diesel generator north of the fan. The motors are housed in steel frame buildings.

**Facilities Pad:** The facilities pad is constructed utilizing Hilfiker MSE (mechanically stabilized embankment) wall system on the south side of the pad. The fill material with the pad consists of existing subsoil material and imported granular fill (approximately 18,100 cy). The pad is lined with a welded impermeable geofabric membrane and topped with 9" concrete. All precipitation that intercepts the pad is collected through a single drop inlet and piped to the sediment basin. Refer to Map 500-3 and 700-2 for this drainage control location.

**Fuel Dock:** The fuel dock facility is located near the roadway access on the south side of the pad. This covered and self contained facility contains two steel storage tanks; 2,500 gallon diesel tank and a 2,500 gallon emulsion tank.

**Rock Dust Tank:** A 140 ton capacity steel rock dust silo is located on the north side of pad. The silo is mounted on a concrete foundation. Rock dust is pumped into specially equipped rock dust trailers or trucks.

**Lift Station:** The lift station is a device that allows longwall equipment to be loaded and unloaded from flat-bed trailers. The lift station is located on the south side of the pad next to the fuel dock.

**Sediment Basin:** The sediment basin is located east of the rock storage area. This structure collects runoff from the facilities pad and road access areas. The basin is equipped with an open riser extending vertically. The riser allows any silt laden runoff to impound behind its embankment. Excess runoff will be conveyed via a 20 inch High Density Polyethelene pipeline to the sediment pond.

**Sediment Pond:** The Rilda Canyon Facilities include construction of a single sedimentation pond located at the eastern extent of the disturbed area. Analysis utilized to determine the size and hydraulics related to the construction and operation of the sedimentation pond and all supporting drainage structures are included in the Drainage and Sediment Control Plan (refer to Volume 11 Appendix Volume - Hydrology: Appendix B). Note that prior to any construction, temporary sediment control was established to

protect the Rilda Canyon creek from additional contributions of sediment. These plans are outlined in the above referenced material.

**Waste, Rock, and Waste Rock Storage Bins:** The storage bins are located on the east end of the facility pad and are used for bulk storage of rock used in the mine, as well as, a temporary storage for garbage and waste rock material produced from mining operations. The bins are constructed of rebar reinforced concrete. The waste bin encloses a portable steel dumpster that is covered by netting which keeps litter from blowing away in windy conditions.

~~The waste rock bin temporarily stores waste rock that is hauled out of the mine. When the bin is full, the waste rock is loaded and hauled to the Deer Creek waste rock site where it is permanently stored.~~

**Covered Storage Bins:** There are six covered storage bins throughout the facilities pad area. These bins are utilized to store materials and supplies which will be used as part of the mining operations. The bins are constructed of 6" box beam steel and covered on three sides. Refer to Map 500-3 for the location of these structures.

**Substation:** Power is supplied to the Rilda Canyon facilities via a 25KV utility service line which parallels the south side of the facility pad. The substation splits the power service into various supply lines and powers the surface operations on the pad. This facility occupies approximately 2,150ft$^2$ and is completely enclosed by a 7' chain link fence.

A reclosure switch platform is constructed within the existing powerline corridor that allows personnel to trouble shoot power failures before reapplying power back to the Rilda Left and Right Fork Sub-stations. The reclosure switch protects the substations and other electrical installations from automatic re-closing of incoming power from the Power Company. The platform is constructed of steel and extends from the edge of the facilities pad to an area near the power pole where the reclosure switch is installed. All design and construction processes comply with OSHA and NEC safety standards for platform and electrical installations.

**Drainage Systems:** Two separate drainage systems are utilized at the Rilda Canyon Portal Facility site and classified as either "undisturbed" or "disturbed". The "undisturbed" system collects water above the facility pad and from side slopes adjacent to the site and conveys it past the disturbed area into the natural channel of Rilda Canyon Creek.

The "disturbed" collection system collects runoff from facilities pad and storage areas and conveys it to the sedimentation basin. This system consists of concrete catch basins, CMP culverts and opened ditches designed to

adequately collect and pass the peak flow from a 10yr/6hr precipitation event. Refer to Volume 11 Appendix Volume - Hydrology: Appendix B for detailed design and Maps 500-3 and 700-2 for locations.

**R645-301-521.200 Signs and Markers Specifications**

Permit area identification signs are placed and maintained at each point of access from public roads. Signs identify the business name, address, telephone number, and DOGM identification number of the Deer Creek Mine.

Perimeter markers are placed around all disturbed areas of the Rilda Canyon portal facilities and Left Fork Rilda Canyon fan facilities. Perimeter signs are placed at a reasonable sight distance from one another.

Areas along the Rilda Canyon perennial stream (within 100 feet of the disturbed area of the Rilda Canyon Portal Facilities) are considered a buffer zone and are appropriately posted as such.

The topsoil area is appropriately posted to identify this location. A silt fence, ditch or other appropriate control structure is used to prevent topsoil erosion from the site. Refer to Volume 11 Appendix Volume - Hydrology: Appendix B for a complete description of the Alternative Sediment Control Areas (ASCA's).

## *R645-301-522 Coal Recovery*

This section includes a description of the mine plan and measures used to maximize the use and conservation of the coal resource. The description attempts to show that coal mining and reclamation operations are conducted to maximize the utilization and conservation of the coal, while utilizing the best technology currently available to maintain environmental integrity. This decreases the likelihood of re-affecting the land in the future through coal mining and reclamation operations. Coal Recovery in the Mill Fork area is included in Volume 12, Mill Fork Lease, ML-48258 of the Deer Creek MRP.

**Mine Plan:** Access to the to North Rilda reserves was achieved with the use of 5-entry set of mains referred to as 4$^{th}$ North Mains. The 4$^{th}$ North Mains are developed northwest (approximately 4000 feet) from the 4$^{th}$ North / 10th West Mains intersection. Mainline development, designated as 5$^{th}$ North, then changed course to a northeast bearing, with development proceeding under the Right Fork area of Rilda Canyon. Selection of the Right Fork stream crossing area was based on the results of an extensive surface exploration program conducted in the Right Fork of Rilda Canyon (refer to Volume 9 maps HM-9, HM-10 and HM-12). A series of six drill holes were completed in 1997 to document coal seam characteristics, structural geology and hydrologic conditions. Drilling was conducted on approximately 250 foot centers across the projected Mill Fork Graben from previously completed drill holes EM-158 and EM-56. No structural discontinuities were identified during drilling. Groundwater encountered during drilling was restricted to minor quantities from the alluvium/colluvial fill (estimated at 2 - 5 GPM) near the bedrock interface. Based

upon the results of the surface exploration program, mining below the Right Fork of Rilda Canyon was re-located approximately 800 feet to the west of the original projection. Re-location of the mains to the west increased the overburden from approximately 120 to 200 feet.

Based on the information gained from the surface exploration program, a detailed plan was developed to position the 4th North/5th North intersection to optimize the "no-subsidence" design of the 5th North / Rilda Canyon Right Fork crossing route and rock slope access into the lower Hiawatha Seam as well as maximizing overall reserve recovery within the area.

From the 4th North/5th North intersection, mainline development proceeded to the northern boundary of Federal Coal Lease U-024317. Longwall gateroad development sections were driven due east from the 5th North Mains to the extent of mineable reserves. Six longwall panels were completed in the Blind Canyon Seam, and six longwall panels were completed in the Hiawatha Seam. Sequences of longwall panels extracted in the Blind Canyon Seam were as follows:

Blind Canyon Seam:

| Longwall Panel | Coal Lease |
|---|---|
| 11th East | Federal Leases U-06039 |
| | U-024317 |
| | PacifiCorp patent fee claims |
| 12th East | Federal Leases U-06039 |
| | U-024317 |
| | PacifiCorp patent fee claims |
| 14th East | Federal Leases U-06039 |
| | U-024317 |
| | PacifiCorp patent fee claims |
| 15th East | Federal Leases U-024317 |
| 9th East | Federal Leases U-06039 |
| | U-024317 |
| | SL-051221 |
| | U-2810 |
| | PacifiCorp patent fee claims |
| 8th East | Federal Leases U-06039 |
| | SL-051221 |

**Hiawatha Seam Access:** Access to the to North Rilda Hiawatha seam reserves was achieved with development of rock slopes and vertical raises from the Blind Canyon seam to the Hiawatha seam. From the bottom of the slopes, a 5-entry set of mains referred to as 6th North Mains were developed to the northeast for access to gateroad development in the Hiawatha seam. Main line development was reduced to three entries above 6th Right. The sequences of longwall extracted in the Hiawatha Seam were as follows:

Hiawatha Seam:

| Longwall Panel | Coal Lease |
|---|---|
| 5th Right | Federal Leases U-06039 |
| | U-024317 |
| | PacifiCorp patent fee claims |
| 4th Right | Federal Leases U-06039 |
| | U-024317 |
| | PacifiCorp patent fee claims |
| 3rd Right | Federal Leases U-06039 |
| | U-024317 |
| | SL-051221 |
| | U-2810 |
| | PacifiCorp patent fee claims |
| 2nd Right | Federal Leases U-06039 |
| | SL-051221 |
| 7th Right | Federal Leases U-06039 |
| | U-024317 |
| 8th Right | Federal Leases U-06039 |
| | U-024317 |

Longwall mining on North Rilda Ridge was completed during August 2004. As indicated above, a total of six panels were extracted in each seam.

**Mill Fork State Lease ML-48258 Access:** Based on data acquired through surface coal exploration programs, Energy West developed a mine plan to access the Mill Fork State Lease with a set of 6-entry mains driven on a northwest bearing from the 6th North Mains. Mining within the Mill Fork Access corridor was restricted to mainline development. To ensure long term stability, pillars will not be removed (refer to Volume 5 Map 3-7).

**Rilda Canyon Portal Facility Access:** Based on data acquired through in-mine directional drilling program, Energy West developed a mine plan to access the Rilda Canyon Portal Facility area by extending the 1st Right submains with a set of four entry submains driven southeast toward the Hiawatha coal outcrop near the fork of the Rilda Canyon. Near the Hiawatha outcrop, however, the in-mine directional drilling located a burn area that affects approximately 250 feet of outcrop coal. The intake and travelway breakouts were accomplished by driving a pair of rock slopes to the outside below the burned coal area of the seam. The slope was constructed at the elevation of the mine facilities pad and sloped upward at approximately 8% for approximately 500 feet to intersect the Hiawatha coal seam. The dimensions of the portals are approximately 20' x 9' rectangular opening. Mine equipment currently utilizes the access portal for material supply of underground mining operations. Mine equipment will be transported through the portal to access the northwestern (Mill Fork) reserves of the Deer Creek Mine.

Two northern and two southern panels of each seam extended below the Castlegate Sandstone escarpment. As specified in the lease stipulations, "except at specifically approved locations, the Castlegate escarpment must be protected from mining induced failure". Due to the limited surface exposure of the Castlegate Escarpment, no special monitoring of environmental assessment was deemed necessary for the northern panels. An environmental analysis for full extraction longwall mining beneath the Castlegate Sandstone escarpment has been completed for the two southern panels with an accompanying Decision Notice/FONSI signed (Volume 11 Appendix Volume - Engineering: Appendix C and D). The environmental analysis assessed the following:

a. How much escarpment could fail based on analytical methods, observation of similar areas, geologic/topographic conditions, and panel orientation.

b. What resources would be affected by escarpment failure and description of the nature and magnitude of these effects, ie: vegetation; wildlife and habitat; threatened/endangered and sensitive species; cultural and paleontological resources; hazards; visual quality; etc.

The Castlegate Sandstone escarpment within the North Rilda Permit Application area has been defined in the permit application in two (2) distinct portions:

- *NORTH CASTLEGATE ESCARPMENT - NORTH RILDA AREA*
- *SOUTH CASTLEGATE ESCARPMENT - NORTH RILDA AREA*

**North Castlegate Escarpment:** The Castlegate Sandstone escarpment within the northern portion of the North Rilda Area (north face of the ridge) has very limited surface exposure due to the presence of talus slopes and forest vegetation which cover most of the escarpment in this area. Due to the limited surface exposure of the Castlegate escarpment, no special monitoring or mine layout protection is planned for the escarpment in this area, i.e.; the four (4) northernmost longwall panels in the Blind Canyon and Hiawatha Seams - North Rilda Area, refer to Volume 11 Appendix Volume - Engineering: Appendix A for complete description and comparison of the North Castlegate Escarpment to previously mined areas.

**South Castlegate Escarpment:** The Castlegate Sandstone escarpment within the southern portion of the North Rilda Area (south face of ridge) has a prominent surface exposure. Based on an on-going geotechnical study evaluating the potential effects of longwall (full-extraction) mining on the stability of the Castlegate escarpment, i.e.; Cottonwood Newberry Canyon/Corncob Wash and Trail Mountain 5$^{th}$ East/Cottonwood Canyon Test Areas, on going development of a predictive escarpment/mining model is in progress. The current model developed from these studies was used to forecast anticipated effects of proposed mining under the escarpment within the southern portion of the North Rilda Area, ie: The two (2) most southern longwall panels proposed in the Blind Canyon and Hiawatha Seams - North Rilda Area, refer to R645-301-500: Appendix A for complete description of the Geotechnical Study.

**Coal Recovery:** The maximum amount of economically recoverable coal will be extracted from the North Rilda Area of the Deer Creek Mine with the exception of protective coal barriers which must be left in place to ensure the integrity of the mine entries associated with the active underground workings and to protect environmentally sensitive surface resources within the Rilda Canyon Fork Area (See $R_2P_2$ Mine Plan Map [Volume 5, Map 3-6 & 3-7]). These protective coal barriers can be broken into five (5) separate categories:

(1) **Property Boundary Barriers:** All external property boundary lines are protected by a 50 foot (minimum) solid coal "buffer" barrier.

(2) **Protective Main Entry Barriers:** Protective main entry barriers are designed to protect long term mine entries from excessive abutment pressures of the retreating longwall. Design of these barriers are based on (I) intended duration of use, (ii) depth of cover in the area, (iii) geologic conditions present, and (iv) historical performance of similar sized barriers in similar conditions.

(3) **Bleeder Entry Barriers:** Bleeder entry barriers are designed to insure the long term stability of the longwall panel bleeder system. Design of these barriers is based on (I) intended duration of use, (ii) depth of cover in the area, (iii) geologic conditions present, and (iv) historical performance of similar sized barriers in similar conditions. Evaluation of localized conditions at the time of development, in conjunction with the preceding design parameters, will be on-going to determine final barrier sizing so that bleeder entry stability and coal recovery may be optimized.

(4) **Surface and Sub-Surface Resource Protective Barriers:**
(a) In-place coal will be left within the Rilda Canyon fork area to insure the long-term stability and integrity of environmentally sensitive surface and sub-surface resources.
(b) In-place coal will be left within the Mill Fork Access area to ensure the long-term stability and integrity.

(5) **Mining Below the Right Fork of Rilda Canyon**: A portion of the right fork of Rilda Canyon lies within the proposed North Rilda Area Permit Application of the Deer Creek Mine. Due to the environmental sensitivity of the Right Fork area (specifically the sub-surface hydrologic alluvial system and associated surface riparian vegetation zone), a complete analysis of a proposed "no-subsidence" design of the 5$^{th}$ North Mains development within the area of the right fork of Rilda Canyon has been prepared addressing the long term ground stability and subsidence protection of the area with regards to proposed mining. All pre-mining and post-mining conditions have been evaluated based on the best

geologic and engineering information currently available (refer to R645-301-500 Engineering Section: Appendix A).

The 4th North Mains consist of a 5-entry development section, bearing northwest from the Deer Creek 10th West Mains. Initial location of the 10th West/4th North intersection was based on the following:

(a) Existing Blind Canyon seam conditions encountered in 10th West Mains development.
(b) Proximity to the projection of the Mill Fork Fault Graben.
(c) Most practical access route to the North Rilda - Blind Canyon and Hiawatha coal reserves, across the North Rilda Canyon Forks area.

A complete analysis of the location and long term ground stability of the 4th North / 10th West Mains and the Left Fork of Rilda Canyon was prepared and submitted by PacifiCorp to the BLM on November 15, 1996. Approval to proceed with relocation and development of the 4th North Mains was given by the BLM (per letter) February 13, 1997.

With regard to PacifiCorp's North Rilda Area Permit Application, the 4th North Mains were originally projected to be developed northwest (approximately 3000 feet), from the 4th North / 10th West Mains intersection. Based on the results of the 1997 surface exploration conducted in the Right Fork of Rilda Canyon, a meeting was held in October 1997 with DOGM, USFS, and BLM to discuss the re-location of the 4/5th intersection to maximize the overburden in the Right Fork stream crossing. The 5th North Mains were re-located approximately 800 feet west of the original projection, increasing the overburden from 120 to approximately 200 feet. Based on the information gained from the surface exploration program, a detailed plan was developed to position the 4th North/5th North intersection to optimize the "no-subsidence" design of long term entry stability for the 5th North / Rilda Canyon Right Fork crossing route and rock slope access into the lower Hiawatha Seam as well as maximizing overall reserve recovery within the area.

It is expected that recovery rates of 85% can be obtained within the proposed longwall panel areas. The overall minable reserve recovery for the North Rilda Canyon area of the Deer Creek Mine is estimated at approximately 65%. In addition to the protective barriers listed above, Energy West has no plans on recovering coal pillars for remaining gateroad and mainline development entries.

The Deer Creek mining plan is based on the geologic information of the area obtained from outcrops, drilling, and previous mining by the operator. For geologic information of this area, refer to R645-301-600 and Volume 8 of the MRP.

## *R645-301-523 Mining Methods*

The following is a description of the mining operation proposed to be conducted during the life of the mine within the North Rilda Canyon Area, including the methods of coal mining, engineering techniques, and anticipated annual and total production of coal.

**Continuous Mining Units (Main Entry and Longwall Section Gateroad Development):**
The principal purpose of the continuous mining units within the North Rilda Area of the Deer Creek Mine is underground mine development (i.e. section development of mainline entries, longwall section and gate road development, and longwall section setup/bleeder entry development; along with development of mine water holding sumps, rock storage rooms, etc.).

Figure R645-301-500a (Figure Tab) illustrates the basic configuration of a typical five-entry main, consisting of (nominal) 20 feet wide entries and crosscuts driven on standard 80 feet x 100 feet entry centers. The pillars created measure a (nominal) 60 feet wide x 80 feet long; a size which has been developed for sufficient support of the main entries and overlying strata.

A variation to this typical configuration was utilized for the development of main entries underlying the crossing of the Rilda Canyon Right Fork Area. These five-entry mains consist of (nominal) 20 feet wide entries and crosscuts driven on 80 feet x 130 feet entry centers. To eliminate multiple intersections in the stream crossing area, crosscut locations were staggered. The pillars created measure a (nominal) 60 feet wide x 110 feet long; a size which improves long term main entry stability and overlying strata stability through an area of hydrologic and surface resource concern.

Figure R645-301-500a also illustrates the basic configuration of a typical two-entry longwall panel development, consisting of (nominal) 20 feet wide entries and crosscuts driven on (nominal) 50 feet x 100 feet entry centers. With the retreating longwall mining system, all panel development work is accomplished by continuous mining units prior to longwall installation.

**Longwall Mining System:** The predominant mining method to be used in the North Rilda Area of the Deer Creek Mine is *Longwall Retreat Mining*. This method, as practiced by PacifiCorp, presents the safest and most efficient underground resource recovery mining method available.

As referenced above, the two-entry gateroad system is developed with (nominal) 20 feet wide entries and crosscuts driven on (nominal) 50 feet x 100 feet entry centers. This type of "yield pillar" configuration is designed so that the gateroad pillar will gradually yield as longwall retreat proceeds from panel to panel. The

purpose of this design is to prevent the buildup of unrelieved stresses within the pillar.

Figure R645-301-500b (Figure Tab) illustrates the basic configuration of a retreating longwall system. After gateroad entries are driven to the extent of the longwall panel length, on both sides of the longwall panel, setup and bleeder entries are driven to connect the gateroads. A solid coal barrier is left between the setup and bleeder entries, size based on; (1) intended duration of use, (2) depth of cover in the area, (3) geologic conditions present and (4) historical performance of similar sized barriers in similar conditions.

Longwall face width, depending on the geologic parameters of the coal deposit, varies from 500 feet to 1000 feet wide. Standard face width is 750 feet center to center (from center-line of head-gate belt entry to center-line of tailgate entry), or 730 feet coal block width. Once installed in the setup entry, the longwall begins retreat mining (from the setup entry "outby" toward the main line entries). A protective barrier is left between the mined out longwall panel (extraction face) and the main line entries that is sized to insure long term main line entry stability.

Panels are designed within the mining area, bounded by natural and imposed limits, with varying degrees of confidence as to final location and extent. Faults may vary somewhat from currently assumed locations. Geologic limitations such as seam splits, channel scours, spars, stratigraphic thinning, burned coal areas, etc. may affect resource recovery by varying the mining limits by hundreds of feet as information becomes available and as mining recovery economics and practicality are further refined. Regulatory mining restrictions, such as escarpment protection barriers and perennial stream buffer zones further confine mining extent.

The anticipated production will be obtained by utilizing two to three continuous mining units and one longwall mining system. The Deer Creek Mine normally operates two continuous mining units and one longwall mining system.

The North Rilda Area of the Deer Creek Mine was developed with mains and sub-mains which supported a series of longwall mining panels. This system is very effective in extracting and maximizing coal recovery. Approximately 75% of the Deer Creek minable coal reserve will be extracted by longwall mining systems, 25% will be extracted by continuous miner development.

The extracted coal is transported by underground conveyor belt to the Deer Creek portals, sized in the Deer Creek coal handling facility and conveyed to the PacifiCorp - Huntington Power Plant, approximately two miles away. A portion of the coal was also transferred to the Cottonwood Mine loading facilities via underground conveyor belts and transfer shaft. The loading facility and underground conveyor system is no longer in operation.

The interburden in the minable area where the two seams overlap averages about 80 feet. Multi-seam mining will be evaluated where in interburden thickness of less than 30 feet exist between the two seams.

The mine layout of the Deer Creek mine is illustrated in Volume 5, Maps 3-6 and 3-7. The drawings show an arrangement of longwall panels and development sections interconnected by systems of main and sub-main entries. This arrangement is predicated on geographical dedication of reserves, regulatory mining restrictions, available coal quality, and geologic information.

The planned mine development sequence accommodates longwall panels as the primary means of efficiently extracting the reserves. This will ensure the best possible means of maximizing reserve recovery while maintaining consistent coal quality and ground control. Volume 5, Map 3-6 and Map 3-7 shows the North Rilda Area. Table 3 (Volume 2, Part 3) provides the approximate number of acres affected by mining in five-year increments for the Deer Creek Mine.

**Mine Production:** Average Production rates for the North Rilda Area were approximately 1,150 tons/machine shift for continuous miners and 9,000 tons/machine shift for the longwall. Table 4 (Volume 2, Part 3) of the MRP lists the anticipated annual and total production of coal at the Deer Creek Mine.

All in-mine coal haulage is by belt conveyor. Of the total entries in the main entry system, at least one entry is dedicated specifically to the belt conveyor. All mine personnel and materials are transported underground by diesel equipment. Table 5 (Volume 2, Part 3) lists the major ancillary equipment used in Deer Creek Mine.

## *R645-301-524 Blasting and Explosives*

The Deer Creek Mine is no longer a ~~developed and~~ producing underground mine (production ceased on January 7, 2015) and there is no anticipated need for any surface blasting activities incident to the underground mining activities. However, if circumstances develop that require surface blasting activities, a plan will be initiated in accordance with DOGM regulations in R645-301-524.

**R645-301-524.100 Blaster Certification**

All surface blasting incident to underground mining operations will be conducted under the direction of a certified blaster. Blaster certifications will be kept at the blasting site during blasting activities.

A certified blaster and at least one other person will be present at the firing of a blast. The blaster will be familiar with the blasting plan and site specific performance standards (refer to Volume 3 Appendix VI for the approved plan)

**R645-301-524.200 Blast Design**
Submittal of blast designs for shots will be made to the Division for approval prior to conducting surface blasting at the mine site. A schedule will be presented to the Division prior to conducting blasting activities. The blast design will be prepared and signed by a certified blaster.

**R645-301-524.300 Blast Survey**
A pre-blasting survey will be conducted as needed.

**R645-301-524.400 Blast Schedule**
If conducted, the blaster will use audible signals to notify those in the vicinity immediately before the blast. No residents live within one-half mile of the proposed blasting site. All blasting will be conducted between sunrise and sunset.

## *R645-301-525 Subsidence Control Plan*

This section describes in detail the operator's plan to ensure minimal environmental impacts from mine-induced subsidence. The Operation Plan (Volume 2, Part 3) plus the Geology Section (Volume 8) present the detailed data on which the analytical approach for the subsidence control plan is based. The following subsections describe the principal factors involved in controlling subsidence impacts resulting from the proposed mining operations.

For subsidence control and monitoring information specific to the Mill Fork Lease, please refer to Volume 12, Mill Fork Lease, ML-48258 in the Deer Creek MRP.

**R645-301-525.100 Subsidence Damage Probability Survey**
A survey has been conducted on that portion of East Mountain surface which could possibly be affected by the mining of coal from the North Rilda and Mill Fork areas. It has been determined that there are renewable resources present in the area in the forms of springs, water seeps, grazing land, timber, and wildlife. There are no springs and seeps located above the projected mining activities in the North Rilda Area. The occurrence of the springs is discussed in the hydrology section of this document (Section 700). Only two springs are located within the North Rilda permit area, 80-50 located in Section 29 and the Rilda Canyon Springs located in Section 28 (refer to Volume 9 HM-9 for the location of the springs and Volume 9 - Hydrologic Section of the Deer Creek MRP: Appendix A for sampling sites and monitoring schedule). Most of the streams within the permit area are ephemeral and/or intermittent. Only the lower portion of Rilda Canyon Creek below the Rilda Springs is considered perennial. The streams are fed by springs that emanate primarily in the North Horn Formation west of the permit boundary. Second mining (i.e. longwall extraction, room & pillar, of the North Rilda area) will be

limited to the ridge separating Rilda and Mill Fork canyons and subsidence will not occur beneath the stream channels of these canyons. First mining (i.e. mainline, gateroad development) did occur below the Right Fork of Rilda Canyon. For a complete analysis of the proposed "no subsidence / long term stability" design of the 5th North Mains development within the Right Fork of Rilda Canyon and the long-term stability analysis refer to the Engineering Section R645-301-500 A. To protect the alluvial/colluvial system of the Right Fork of Rilda Canyon a stream buffer zone was established based on the extent of the riparian zone and the angle of draw from the Hiawatha Seam, the lowest seam to be mined. The riparian zone within the Right Fork of Rilda Canyon was delineated by field observation, aerial photography, and map contour analysis. The extent of the identified zone is based on the contact of the alluvial/colluvial fill with the canyon's side slopes. The angle of draw was calculated from the Hiawatha Seam horizon/elevation @ 15 degrees to the point of intersection on the surface. The stream buffer zone delineates the area restricted to full extraction mining. The referenced 15 degree angle of draw is an industry/agency accepted standard used for delineation of surface influence protection from mining areas considered for full extraction mining. Mining experience at Energy West's Deer Creek, Cottonwood, and Trail Mountain mines has provided a sound, scientific basis for using the 15° angle of draw mentioned above (refer to Annual Subsidence Reports of the Deer Creek MPR).

The angle of draw of subsidence produced by full-extraction mining can be influenced by many factors. These include the size of the area mined; number of seams mined, fractures or faults in the overburden, adjacent mine workings, and adjacent areas of burned coal and clinker. If mine workings extend to an area of burned coal, experience has shown that the overburden stresses above the mined area can be transferred to the adjacent burned coal and clinkers which can cause the clinkered areas to fail. In this case, the angle of draw may appear to be very shallow, when the crushing of the clinkered areas is the source of subsidence outside the normal area of influence.

Faults can also influence the angle of draw. If mining occurs adjacent to an existing fault, the area of subsidence will follow the natural plane of weakness formed by the fault. In this case, the angle of draw will be the same as the dip of the fault.

Based on data collected by the U.S. Bureau of Mines and eighteen years of subsidence data collection on East and Trail mountains, the angle of draw is found to be between 0 and 15 degrees from vertical. In some limited areas, the angle of draw is greater than 15 degrees, but in every case, the angle is greater due to the influence of one of the other factors mentioned above.

For planning purposes, any barrier of protection left in the mine to protect surface features should use a 15 degree angle of draw unless one of the factors mentioned above is known to exist in the immediate area.

No structures such as cabins, fencing, water troughs, and stock ponds currently exist within the boundaries of the North Rilda Area. A single gas well (Merit Energy Federal 32-23) is located adjacent to the mine workings in Section 23, T16S, R6E, SLB&M. A cooperative agreement between Merit Energy and PacifiCorp ensured that mine workings were confined in such a way that the well and associated pipeline were not impacted by mining or subsidence.

**R645-301-525.200 Protected Areas**

The operator will conduct the underground mining operations so as to prevent subsidence from causing material damage to the surface and to maintain the value and reasonable foreseeable use of that surface in accordance with the preceding subsidence control plan.

As mentioned in the PROBABLE HYDROLOGIC CONSEQUENCES DETERMINATION section, (728: Hydrologic Balance - Surface Water System), the drainages conveying runoff away from the permit areas are streams in Rilda, and Mill Fork canyons. Second mining, i.e. longwall extraction, room & pillar, of the North Rilda area will be limited to the ridge separating Rilda and Mill Fork canyons and subsidence will not occur beneath the stream channels of these canyons. First mining, i.e. mainline, gateroad development, will occur below the Right Fork of Rilda Canyon. For a complete analysis of the proposed "no subsidence / long term stability" design of the 4/5$^{th}$ North Mains development within the Right Fork of Rilda and long-term stability analysis, refer to Volume 11 Appendix Volume - Engineering: Appendix A. To protect the alluvial/colluvial system of the Right Fork of Right Fork of Rilda Canyon, a stream buffer zone was established based on the extent of the riparian zone and the angle of draw from the Hiawatha Seam, the lowest seam to be mined. The riparian zone within the Right Fork of Rilda Canyon was delineated by field observation, aerial photography, and map contour analysis. The extent of the identified zone is based on the contact of the alluvial/colluvial fill with the canyon's side slopes. The angle of draw was calculated from the Hiawatha Seam horizon/elevation @ 15 degrees to the point of intersection on the surface. The stream buffer zone delineates the area restricted to full extraction mining. The referenced 15 degree angle of draw is an industry/agency accepted standard used for delineation of surface influence protection from mining areas considered for full extraction mining. Mining experience at Energy West's Deer Creek, Cottonwood, and Trail Mountain mines has provided a sound, scientific basis for using the 15$^{o}$ angle of draw mentioned above (refer to Annual Subsidence Reports of the Deer Creek MPR).

**R645-301-525.300 Subsidence Control**

The operator intends to minimize surface effects of subsidence by adopting, wherever practical, the longwall mining method and mining the coal deposits as completely as possible. The areas within the mine limits not mined by the longwall method will be mined by continuous miner in development for the longwall system. Approximately seventy-five percent (75%) of the recoverable coal reserve will be mined by the longwall method, the remaining area will be mined by continuous miner units.

The longwall mining method allows almost total extraction of the mineral and induces caving of the immediate and upper roof strata. As the coal seam is extracted, the overlying stratum caves rapidly. The caving process has been shown to propagate to within 100 feet of the surface in less than two weeks after mining. This was determined by a cooperative study conducted by the U.S. Bureau of Mines using Time Domain Reflectometry (TDR). In this study, a coaxial cable was cemented within a drill hole positioned near the center of the 14th West longwall panel in the Cottonwood Mine. As the caving of the strata occurred, the cable would shear or be stretched. The depth of the shears or stretches could be identified with instruments on the surface. The data collected from this study is contained in Volume 3, Appendix IV of the MRP. Surface subsidence has been observed within two months of the coal extraction. In most areas, the subsidence will stabilize within 2 years of mining.

It is the operator's intent to mine areas as wide and long as present mining technology or equipment allows in order to minimize the area which would be on the sloping edge of the subsidence trough. The pillars of support for the longwall gate roads have been designed on the yielding pillar principle so that they will yield to destruction. This has been proven in practice in the mines and therefore will not affect the subsidence trough.

The size of the support coal pillars used in mine planning for both the Blind Canyon and Hiawatha seams to ensure long term stability has been determined by basic calculation for the deepest expected cover (from prior mining practice in the area) and USBM study. Experience has also shown that, in multi-seam mining circumstance, columnizing main entry development pillars in both seams is essential for long term main entry stability.

Full extraction areas, by definition, are planned and can control subsidence in areas. It is anticipated that the planned subsidence will minimize impacts and result in a generally uniform lowering of the surface lands in broad areas, thereby limiting the extent of material damage to those lands and causing no appreciable change to present land uses and renewable resources. Subsidence prediction work has shown that the expected maximum planned and controlled subsidence will vary from zero to fifteen (0-15) feet, assuming that the total cumulative extraction from the two minable seams will not exceed twenty (20) feet.

*First Mining, "No Subsidence Restricted" Areas*

1) Right Fork of Rilda Canyon
   First mining, (i.e. mainline development), has occurred below the Right Fork of Rilda Canyon. For a complete analysis of the proposed "no subsidence / long term stability" design of the 5$^{th}$ North Mains development within the Right Fork of Rilda Canyon and the long-term stability analysis refer to the Engineering Section R645-301-500 Appendix A.

2) Mill Fork ~~State Lease ML-48258~~ Permit Area (Federal Lease UTU-84554) Access (Hiawatha Seam)
   Access to the to North Rilda Hiawatha seam reserves was achieved with the development of rock slopes and vertical raises from the Blind Canyon seam to the lower seam. From the bottom of the slopes, a 5-entry set of mains (referred to as 6th North Mains) were developed to the northeast for access to gateroad development in the Hiawatha seam. Main line development was reduced to three entries above 6th Right.

Based on data acquired through surface coal exploration programs, Energy West developed a mine plan to access the Mill Fork State Lease with a set of 6-entry mains driven on a northwest bearing from the 6th North Mains. Mining within the Mill Fork Access corridor will be restricted to mainline development. To ensure long term stability, pillars will not be removed (refer to Volume 5 Map 3-7).

**R645-301-525.400 Subsidence Monitoring Plan**

The operator initially adopted a twofold approach to subsidence monitoring:

1) Aerial photogrammetry,
2) On-the-ground monumentation.

After seven years of comparing the two types of surveys it was determined that both methods effectively document the amount of subsidence which has occurred; however, the aerial photogrammetry method has the advantage of showing more detail because more data points can be monitored with less effort. Therefore in 1987, with the concurrence of the State of Utah, Division of Oil, Gas & Mining (DOGM), the operator discontinued on-the-ground monumentation and now collects subsidence data solely by aerial photogrammetry.

The subsidence monitoring program, conducted since 1980, has produced data which not only document the amount of subsidence that has occurred but also allows the operator to predict the amount of subsidence that is likely to occur when mining in new areas. The detail of the data collected in years past is not included herein. If the reader desires to investigate past data, it can be found in the annual subsidence reports on file at DOGM.

**Aerial Photogrammetry:** PacifiCorp's subsidence monitoring program is primarily based on aerial photogrammetry. A baseline photogrammetric survey was conducted in 1980 which includes over 12,000 elevations measured on a 200-foot spacing grid. These elevations are then compared to elevations measured from the photographs taken annually in August. This method has proven to be the best way to collect subsidence data on East Mountain. In flat areas, with limited vegetation, the elevations can be read from the photographs with a precision of one-half foot. In steeper areas, where cliffs are present, the resolution becomes less reliable, and inaccuracies of greater than ten feet can

occur. In steeper areas, photogrammetric monitoring can, and has been, augmented by conventional survey data. The applicant will maintain survey control aerial targets within the permit boundary necessary to allow the interpretation of coordinates on photos within ±1 foot. Following this procedure the operator shall conduct annually an aerial photo survey of all areas which have been undermined. The operator shall continue monitoring all areas undermined until it is mutually agreed by the operator and DOGM that the subsidence in a given area has become stable and no further monitoring is necessary. The findings of the survey shall be reported to DOGM annually in a summary report.

Special Monitoring - Castlegate Cliff Escarpment

*North Castlegate Escarpment - North Rilda Area*

The Castlegate Sandstone escarpment within the northern portion of the North Rilda Area has very limited surface exposure due to presence of talus slopes and vegetation that cover the formation in this area. Due to the limited surface exposure of the Castlegate escarpment, no special monitoring or mine layout protection measures was planned for the escarpment in this area (refer to Volume 11 Appendix Volume - Engineering: Appendix A for a comparison of the North Castlegate Escarpment to previously mined areas).

*South Castlegate Escarpment - North Rilda Area*

The Castlegate escarpment, within the southern portion of the North Rilda Area, has well established surface exposure. Based on a geotechnical study evaluating the potential effects of longwall (full-extraction) mining on the stability of the Castlegate Sandstone escarpment, i.e. Cottonwood Newberry Canyon/Corncob Wash and Trail Mountain 5th East Cottonwood Canyon Test Areas, development of a predictive escarpment/mining model was developed and presented to DOGM, USFS and BLM. The model developed from these studies was used to forecast anticipated effects of proposed mining under the escarpment within the southern portion of the North Rilda Canyon Area, i.e. two (2) southern-most longwall panels proposed in the Blind Canyon and Hiawatha Seams - North Rilda Area (See $R_2P_2$ Mine Plan Maps Volume 5, Maps 3-6 & 3-7). Based on the predictive escarpment/mining model, areas of potential cliff escarpment failure were monitored with photogrammetric methods, augmented by conventional survey data.

To comply with the special monitoring stipulation referenced in the environmental assessment, "Deer Creek Mine will also monitor subsidence through their mine plan requirements and as proposed, provide higher resolution monitoring data for the North slope of Rilda Canyon by installing prisms for accurate surveying on the top of the escarpment", PacifiCorp installed a series of prisms in 1999 to document subsidence features of Castlegate escarpment (Refer to Map DU1688E in Volume 11 Appendix Volume - Engineering: Appendix A).

Prisms PR-1, PR-2, and PR-3 were installed in February 1999 prior to full extraction mining. Prisms PR-4, PR-5, and PR-6 were installed in June 1999.

All prisms were monitored prior to mining to establish baseline values and percent error variations. During the mining process, prisms were monitored daily until the movement stabilized. Data from the prism monitoring has been reported in each Annual Subsidence report.

In addition to the prism monitoring, PacifiCorp installed warning signs in Rilda Canyon prior to undermining the two southern panels.

After undermining the prisms, each were found to have moved within a few days or weeks after mining was completed. Movement continued throughout 2002 and 2003. Since 2003, the prisms movements have essentially stabilized. Energy West considers the subsidence to be complete and monitoring has discontinued. Prism data has been reported in the annual subsidence report each year from 2000 to 2007.

PacifiCorp did cooperate with the surface land management agency (U.S.D.A. Forest Service) in an environmental analysis of the potential impacts. Final mining approval of the referenced southern longwall panels was granted based on the objective evaluation of the predictive model and assessment of potential surface impact from full-extraction mining within the affected area. The environmental analysis is complete with the associated Decision Notice/FONSI signed on 11/1/99 (see Volume 11 Appendix Volume - Engineering: Appendix C and D in this section) and DOGM consent dated November 10, 1999 (Volume 11 Appendix Volume - Engineering: Appendix E).

**R645-301-525.500 Repair of Damage**

Should significant subsidence impacts occur, the applicant will restore, to the extent technologically and economically feasible, those surface lands that were reduced in reasonably foreseeable use as a result of such subsidence to a condition capable of supporting pre-subsidence reasonably foreseeable uses.

In order to restore any land affected by operations to a condition capable of supporting the current and post-mining land uses stated herein, the operator will replace water determined to have been lost or adversely affected as a result of operator's mining operations if such loss or adverse impact occurs prior to final bond release. The water will be replaced from an alternate source in sufficient quantity and quality to maintain the current and post-mining land uses as stated herein.

During the course of regular monitoring activities required by the permit, or as the operator otherwise acquires knowledge, the operator will advise DOGM and the surface land management agency of the loss or adverse occurrence discussed above, within ten

working days of having determined that it has occurred. Within ten working days after DOGM notifies operator in writing that it has determined that the water loss is the result of the operator's mining operation, the operator will meet with DOGM to determine if a plan for replacement is necessary and, if so, establish a schedule for submittal of a plan to replace the affected water. Upon acceptance of the plan by DOGM, the plan shall be implemented. The operator reserves the right to appeal DOGM's water loss determinations as well as the proposed plan and schedule for water replacement as provided by Utah Code Ann. 40-10-22(3)(a).

As outlined earlier, there are no springs or seeps located above the projected mining activities in the North Rilda Area. Most of the streams within the permit and affected areas are ephemeral and/or intermittent. Only the lower portion of Rilda Canyon Creek below the forks is considered perennial. The streams are fed by springs that emanate primarily in the North Horn Formation west of the permit boundary. Second mining, i.e. longwall extraction, room & pillar, of the North Rilda area will be limited to the ridge separating Rilda and Mill Fork canyons and subsidence will not occur beneath the stream channels of these canyons. First mining (i.e. mainline) gate road development will occur below the Right Fork of Rilda Canyon. For a complete analysis of the proposed "no subsidence / long term stability" design of the 5$^{th}$ North Mains development within the Right Fork of Rilda Canyon and long-term stability analysis refer to the Engineering Section Volume 11 Appendix Volume - Engineering: Appendix A. To protect the alluvial/colluvial system of the Right Fork of Rilda Canyon a stream buffer zone was established based on the extent of the riparian zone and the angle of draw from the Hiawatha Seam, the lowest seam to be mined. The riparian zone within the Right Fork of Rilda Canyon was delineated by field observation, aerial photography, and map contour analysis. The extent of the identified zone is based on the contact of the alluvial/colluvial fill with the canyon's side slopes. The angle of draw was calculated from the Hiawatha Seam horizon/elevation @ 15 degrees to the point of intersection on the surface. The stream buffer zone delineates the area restricted to full extraction mining. The referenced 15 degree angle of draw is an industry/agency accepted standard used for delineation of surface influence protection from mining areas considered for full extraction mining. Mining experience at Energy West's Deer Creek, Cottonwood, and Trail Mountain mines has provided a sound, scientific basis for using the 15$^{o}$ angle of draw mentioned above (refer to Annual Subsidence Reports of the Deer Creek MPR).

**R645-301-525.700 Public Notice**

The operator will not mine in any areas that would allow potential subsidence effects (as indicated by the angle of draw) to affect any area outside of the lease and affected area boundary until this constraint on coal recovery is resolved by OSM and BLM or permission is granted by the adjacent surface agencies. A mining schedule; which details the area in which mining is to take place and the planned date of the mining activity, has been submitted to the affected surface owners.

## *R645-301-526 Mine Facilities*

Support facilities exist and have been constructed in Rilda Canyon, a tributary of Huntington Canyon; Left Fork Fan Facilities, and Rilda Canyon Portal Facilities. The Left Fork Fan Facilities pad and access road of this area occupy approximately 2.01 acres of Manti-La Sal National Forest land in the NW1/4, NW1/4, SE1/4 of Section 29, T16S, R7E, SLM. These facilities include an access road and a pad area which supports two portals, a substation, power line, fan, water storage tank, and pumphouse. Topsoil removed prior to construction of the site is stored within the disturbed area of the Left Fork Rilda Canyon facilities.

Vehicular access has been limited to the public turn-around area below the portal facilities. However, the Left Fork road continues to serve as a Forest Development Trail, allowing access by horseback and foot travel up the Left Fork of Rilda Canyon and beyond the fan facility area. Access to the facility pad is controlled with fencing and a locked gate at the point where the road enters the pad. The existing trail continues beyond this point.

Vehicular use of the road within the Left Fork Fan Facilities will only occur in emergency situations, for environmental maintenance, and for maintenance to the substation. Environmental maintenance will include transportation of men, materials, and equipment required to maintain, install, or remove structures that are necessary to comply with environmental laws and regulations. Surface environmental compliance inspections will be conducted on foot from the turn-around area. Maintenance to the substation is usually conducted by an independent contractor. Surface access will need to be maintained for these purposes.

In 1997, vehicular use of the road within Rilda Canyon was revised through proper permitting action via USFS, UDWR, and UDOGM approvals to allow the permittee to transport a limited number of truckloads (tractor/trailer combinations utilizing forty foot trailers or ten wheel end dump trucks) per day of solid, bulk materials for usage in the North Rilda area of the mine. Special travel stipulations were imposed to limit this access. As material storage is no longer needed at the Left Fork facility, access will only be used for the three situations mentioned above.

One exception to the three situations above is that during the winter months, snow fall depths on the access road can hamper and greatly delay access during emergency situations. Therefore, to maintain emergency preparedness, if and when snow depth along the access road becomes greater than 12 inches, snow removal activities will be practiced.

Snow removal activities will be accomplished by push, pickup, load and haul techniques. ~~Snow volumes will be hauled to the Deer Creek Mine active waste rock site via ten wheel dump trucks and placed for proper treatment of the snow melt runoff.~~ Side casting of snow into the Left Fork Rilda Creek drainage or the adjacent road ditch will not be practiced.

Specific locations and other information regarding the access road and facility pad in Left Fork Rilda Canyon are shown in Volume 4, Maps 2-15A and 2-17A; Volume 5, Maps 3-9A and 3-9B; and Volume 6, Maps 4-1A and 4-4A (Sheets 1, 2 and 3). More specific information about each of the structures and facilities is provided in the MRP. [Volume 2, Part 3 entitled "MINE FACILITIES (Rilda Canyon)"].

Rilda Canyon Portal Facility is located on a 7.28 (including soil storage area) acre site approximately 2.0 miles from the mouth of Rilda Canyon. Of the 7.28 acres of actual disturbance, approximately 1.79 acres were previously disturbed by earlier mining which leaves only 5.49 acres of additional disturbance needed for the surface facilities. The site is characterized by moderate vegetation and rugged, steep terrain. Surface facilities as described in R645-301-521.180, include the following: Access and Mine Fan Portals, Mine Fan, Facilities Pad, Fuel Dock, Rock Dust Tank, Waste, Rock and Waste Rock Storage Bins, Covered Storage Buildings, Substation, Lift Station, Sediment Basin, Sediment Pond, and Drainage Systems. A pre-disturbance topography map is constructed to show the contour of the canyon prior to any construction activities. This map is found in the Maps Section as Map 500-1. As-built construction cross-sections are found on Map 500-4. All construction cut slopes and fills conform to the recommendations outlined in the Geotechnical Study found in Volume 11, Appendix Volume - Engineering: Appendix F.

**R645-301-526.110 Mine Structures and Facilities**

As illustrated on Map 500-1, three abandoned mines exist on the north side of Rilda Canyon: Leroy, Rominger, and Jeppson mines (also refer to photos A through C in Volume 11 Appendix Volume - Engineering: Appendix G, Previously Disturbed Areas). These areas were reclaimed by AML in 1988. No structure presently exists in connection with these mines except for their respective reclaimed footprints. The lower portion of the Leroy Mine is utilized for the location of the sediment pond. Approximately 1.5 acres of predisturbance exists at this site where coal was buried during reclamation activities conducted by AML. The soil covering this coal was stripped off and stored during construction activities. The coal was hauled off to the existing Deer Creek waste rock site (now owned and controlled by Bowie Refined Coals LLC. under a separate permit) or utilized if the quality proved acceptable. Substitute topsoil stripped from the facilities area and was stored at the topsoil storage area which is located next to the NEWUSSD spring collection facility. Both topsoil and substitute topsoil (approximately 7,862 cubic yards) are stored at this location until reclamation activities commence.

The North Emery Water Users Special Service District (NEWUSSD) spring system (refer to photos D through F in Volume 11 Appendix Volume - Engineering: Appendix G (Previously Disturbed Areas) consists of a series of collection lines extending westward up Rilda Canyon and southward up a small side drainage as shown on Map HM-8 (refer to Volume 9 - Hydrologic Section of the Deer Creek MRP). The NEWUSSD spring system is metered at four locations. Meter 1 (Side Canyon Spring) is located at the downstream end of a collection line which enters Rilda Canyon from the South. Meter 2 (Side Canyon Spring plus South Spring) is located near the bottom of the main east-west trending collection line which lies to the south of Rilda Canyon Creek at a point just

upstream (west) of the main spring collection box. Meter 3 (North Spring) records flows for the east-west central collection line which was constructed through the central portions of the valley near Rilda Canyon Creek. Meter 4 (North Spring) collects data from the north collection line located on the north side of Rilda Canyon Creek. Meter 3 and Meter 4 were combined in 1995 during the Rilda Canyon road improvement project.

In addition to the main spring collection lines, there are two flumes in the vicinity which monitor flow rates within Rilda Canyon Creek. The upper flume, RCF-2, is located adjacent to the extreme west end of the spring collection system monitored by Meter 4. Flume RCF-3 is located in Rilda Canyon Creek adjacent to spring collection Meter 2.

Initially five shallow wells were located in the area surrounding the spring collection system to monitor groundwater level fluctuations through time. The locations of the wells are shown on Volume 9 Map HM-9. Wells 1 through 5 are relatively shallow wells which were constructed prior to 1989 by West Appa Coal Company. In 1990, two additional large diameter wells were developed, (Wells 6 and 7) adjacent to wells P-2 and P-3, respectively, in order to obtain more complete groundwater data through aquifer testing. Wells P-2 and P-3 were abandoned and sealed in 1995.

**R645-301-526.116.1 Mining Within 100 Feet of Public Road**

PacifiCorp intends to conduct coal mining and reclamation activities within 100 feet of Emery County Road #306. However, in 2005, PacifiCorp entered into two separate agreements with Emery County Special Services District No. 1 to encroach upon their right of way in Rilda Canyon. Agreement #1 is made to reconstruct, realign, widen, and surface County Road #306 to allow for increase speed and increased traffic. Agreement #2 is made to allow a portion of this road to be temporarily restricted from public use. The restricted use area starts approximately 1/4 mile west of the cattle guard and extend approximately 2,300 feet to the mine gate in the left fork of Rilda Canyon (refer to Figure R645-301-500c). A copy of Agreements #1 and #2 are found in Volume 11 Appendix Volume - Engineering: Appendix B. Access will be given to Emery County Road Department officials and North Emery Water Users Special Services District for periodic inspection and maintenance of their facilities and also to regulatory and other governmental agencies so they may access their jurisdictional areas. Photos of the suspended portion of the road are found in Volume 11 Appendix Volume - Engineering: Appendix G (Existing Road).

**R645-301-526.116.2 Relocating a Public Road**

Emery County Road #306 exists in the location of the North Rilda Canyon portal facilities. This road runs approximately 3.0 miles from the Huntington Canyon road, Highway 31, to the turnaround area in the Left Fork of Rilda Canyon. It is owned and maintained by Emery County Special Service District No. 1. As mentioned above, an agreement has been constructed between PacifiCorp and Emery County to suspend the public use of a portion of EC #306. Approximately 2,300 feet of the road has been temporarily eliminated through the facilities throughout the life of the mine. At time of reclamation, the suspended portion of the road will be reconstructed in its original

location and to its original design. The design and construction plans are the property of Emery County Road District and are better known as Rilda Canyon Road Change Order #1. PacifiCorp has retained a copy of these plans and formatted them onto a CD. These plans can be reviewed in Volume 11 Appendix Volume - Engineering: Appendix G. Reclamation and replacement of the road will be completed to the standards found in these original road designs. Figure R645-301-500c in the Figures Section shows the location of the road and typical road section.

As this restricted use area eliminates public access to the former Forest Service trail system in the canyon, PacifiCorp's Agreement #1 with ECSSD#1 includes the construction of a new trailhead and parking area on the east end of the mine facilities and the reconstruction of the county road (see detailed design in Figure R645-301-500c in the Figures Section and discussion in the Reclamation Plan below). PacifiCorp has established a trail (in cooperation with the USFS) on the south side of Rilda Creek that by-passes the mining facilities. The trail crosses the Rilda Canyon creek and travels parallel to the creek to a point where it reconnects to the existing trail as shown in Figure R645-301-500c. The trail has been constructed to comply with USFS design parameters. Upon reclamation, the trail will be eradicated and the road will be relocated to its original location.

**R645-301-526.200 Utility Installation and Support Facilities**

As described above, North Emery Water Users Special Services District (NEWUSSD) possesses a spring collection system in Rilda Canyon near the mine facilities location (refer to Map 500-1). Water transmission lines associated with the spring collection system have been located to protect against damage from mining operations in the areas in which they pass through the disturbed area.

As Emery County Road #306 was reconstructed (2007), PacifiCorp cooperated with NEWUSSD to insure protection of water transmission lines. Location and design of EC#306 is within the jurisdiction of the Emery County Road Department. Plans for the road can be reviewed in Volume 11 Appendix Volume - Engineering: Appendix G. Support facilities were previously discussed in R645-301-521.180. Construction and operation of these facilities were in accordance to applicable Emery County Building Codes. Drawings and specifications were submitted to the Emery County building inspector for their review.

## *R645-301-527 Transportation Facilities*

The Rilda Canyon operations utilize roads in association with the facilities described in the above sections. The Left Fork Rilda Canyon Fan Facilities are described in Volume 2, Part 3. A description of the transportation facilities is detailed below.

Roads

The Deer Creek Mine Rilda Canyon operations utilize two roads as follows:

(a) Left Fork Rilda Canyon Access Road
(b) Emery County Road #306 (Rilda Canyon Portal Facility)

**Left Fork Rilda Canyon Access Road:** The Left Fork Rilda Canyon Facility Access Road is approximately 1150 feet in length (see Map 3-9A and 3-9B in Volume 5). It follows the north side of the Left Fork of Rilda Canyon from the end of the county road (suspended from public access in 2005) to the facility pad. The existing road/trail was upgraded to a gravel surfaced road in 1995 with an average width of 11 feet and an average grade of approximately 8%. The road was designed in accordance with recommendations from the surface management agency (Manit-LaSal National Forest). See R645-301-534 below and Volume 2, Part 3 for additional information.

**Emery County Road #306 (Rilda Canyon Portal Facility):** PacifiCorp has entered into an agreement with Emery County Special Services District #1 to reconstruct/realign county road #306 (Agreement #1 in Volume 11 Appendix Volume - Engineering: Appendix B). This road is utilized by traffic related to the mine as well for recreational and grazing purposes. The road has been completely asphalted (completed 2007) with a trailhead and parking area constructed of the Rilda Canyon Portal Facility.

This portion of the road is owned and operated by ECSSD #1. However, during winter months snow removal will be required along the entire length of this road. As this is the responsibility of the Emery County Road Department, PacifiCorp may find the need to assist the road department by clearing snow from EC#306 by contracting this work to a private contractor. PacifiCorp will require the contractor to use a deicing product as specified by Emery County on the county portion of the road to make the road safe for mine personnel and other local traffic. The deicing product will not be stored on-site but can be acquired at the Deer Creek portal facilities. No salt will be used within the disturbed areas of the Rilda Canyon Portal Facilities.

**R645-301-527.100 Road Classification**

Only one primary road exists within the disturbed area of the Rilda Canyon portal facility area. This road begins at the mine gate (the end of public access from EC #306and terminates at the facilities pad. This road is utilized daily by mine personnel and supply truck deliveries. The length of the primary is approximately 1,326 feet and coated with asphalt. The foundation of the road is identical to the reconstructed road EC#306. The main components of the foundation are the sub-grade, sub-base, base course, and surface cover. There are no embankments associated with this road.

The subgrade is the native underlying soil that serves as the primary foundation for the road and facilities pad. Placement of the subgrade was completed in specific lifts and did not exceed 8 inches. Compaction was over the full depth of the fill to at least 95% of the maximum dry density as determined by the AASTHO T-180 test procedures. Refer to the Geotechnical Study provided by AMEC Earth and Environmental Inc. in Volume 11, Appendix Volume - Engineering: Appendix F.

The subbase is a compacted granular material between the subgrade and the base course. Typically, the subbase thickness is between 12 inches and 18 inches for the loads that are expected at the mine site. Aggregate and gradation specifications are less stringent than the specifications for the base course.

The base course is the surface layer directly beneath the surface cover. The material has strict specifications for strength, stability, hardness, aggregate type and gradation. Typical thickness of the base course is 6 inches which should provide a stable base for the surface covering material.

The surface covering material consists of bituminous material and mineral aggregates that are well graded. The cover is typically 4 inches thick. As with all foundation layers for the primary road construction, the specifications for the material and construction are detailed by the design. A typical illustration for road base design and location of primary is found on Map 500-3 in the Maps Section. Original designs for this portion of the road are found in Volume 11 - Appendix Volume 11A – Engineering: Appendix G. These designs will be accessed and utilized to replace the road back to its original condition and location at time of reclamation of the site.

## *R645-301-528 Handling and Disposal of Coal, Overburden, Excess Spoil and Coal Mine Waste*

As discussed earlier, approximately 1.79 acres of the facility was disturbed as a result of previous coal mining and other activities. Geotechnical investigations conducted during April 2004 delineated an area of approximately 0.7 acres of buried coal directly below the Leroy Mine. It was estimated that at least 3,600 tons was buried based on the following: 1) average depth of 4.0 feet, 2) in-place weight of 60 lbs/ft$^3$, 3) area: 30,302 ft$^2$. Coal waste encountered during soil salvaging and construction of the sediment pond was segregated separately and transported to the Deer Creek Waste Rock Site (now owned and controlled by Bowie Refined Coals LLC. under a separate permit) for disposal or utilized if the coal quality allowed. Quality data is found in Volume 11 Appendix Volume - Soils: Appendix A, EIS Report, Appendix 6.2, Soil Testing Data, Sample ID RIL1003.

In 2006, coal and coal waste were excavated and removed from the sediment pond area by track-hoe and truck. The quantity of coal removed was 744 tons (accounted for by weigh scales) or 249 cubic yards. This coal was shipped by truck to the Huntington Power Plant

and utilized for power generation. Coal waste removed from the site was approximately 2000 cubic yards. This material was transported by truck to the Deer Creek Waste Rock Site for permanent disposal.

During operations in Rilda Canyon, very limited amounts of coal mine waste (waste rock) ~~may be~~ were transported through the Rilda Canyon portals. Most waste rock ~~will be~~ was removed through the Deer Creek portals. The Deer Creek MRP includes a narrative explaining the construction, modification, use, maintenance, and removal of coal, overburden, excess spoil, and coal mine waste through the Deer Creek portals (sealed and backfilled in April 2015). ~~Up to approximately 125 cubic yards of waste rock may be temporarily stored in a controlled manner in the designated area as shown on Map 500-3. The waste rock will be transported to the Deer Creek waste rock site when the temporary storage area becomes full (Refer to the surface facilities Map 500-3 and facility description in R645-301-521.180)~~.

**R645-301-528.330** **Non-Coal Waste**

All non-coal wastes generated during mining activities and removed from the mine through the Rilda Canyon portals will be placed and stored in a controlled manner in a designated portion of the disturbed area as shown on Map 500-3. The materials will be removed from the site and disposed of in an approved disposal facility.

## *R645-301-529 Management of Mine Openings*

Two (2) portals are located in the Left Fork of Rilda Canyon which support intake and return ventilation entries for the operation of the mine. Underground access to the Rilda Canyon Portal Facilities is achieved by the continuation of a set of three entry 1st Right Submains and development of two rock slopes to the portal facility area near the intersection of the Right and Left Forks. All of the development has occurred in the Hiawatha coal seam and Starpoint Sandstone immediately beneath the coal seam. During the development of the Rilda Canyon Portal Facilities two separate surface breakouts were constructed; 1) Mine Fan, and 2) Intake Access. Both portals were developed [from underground] as rocks slopes through the upper member of the Star Point Sandstone (Spring Canyon Member) from the portal facility area to an interception point in the Hiawatha Coal Seam. Methods used to construct this portal and tunneled slope utilized conventional drill and shoot methods as well as conventional mining methods. The dimensions of the portals are approximately 20' x 9' rectangular opening. The fan is constructed at the west portal. Mine equipment and materials will utilize the east portal to access the northwestern part of the Deer Creek Mine.

Sealing of the portals in the Left Fork Rilda Canyon is detailed in Volume 2, Part 4, Reclamation Plan. Sealing of the portals in the Rilda Canyon portal facility is detailed in the reclamation plan in Section R645-301-540 (also refer to Figure R645-301-500d).

# R645-301-530 OPERATIONAL DESIGN CRITERIA AND PLANS

## *R645-301-531 General*

This section includes a general plan for precipitation runoff management, sediment control, impoundment design, road design, and coal mine waste handling plans. Actual construction drawings for the Rilda facilities were developed by Jones and DeMille Engineers and can be found in Volume 11, Appendix Volume 11A – Engineering, Appendix H.

## *R645-301-532 Sediment Control*

The Rilda Canyon portal facilities (not including soil storage area) cover approximately 6.77 acres of disturbed area. All water within this area will be conveyed to drop drains, ditches, and/or culvert systems. Sediment control allows for undisturbed runoff to bypass the facilities via a diversion ditch and culvert system into the Rilda Creek. Disturbed runoff from the facilities pad area reports to a single drop drain and diverted to the sediment basin via buried culvert system. Over flow from the disturbed system is diverted through a buried culvert to the sediment pond located below NEWUSSD spring collection area. Refer to Volume 11, Appendix Volume 11B – Hydrology: Appendix B for the specific design of this system.

**R645-301-532.200 Stabilization**

Sediment control on cut and fill slopes and soil piles will be accomplished primarily by revegetation. Prior to the establishment of vegetation, the slopes will be protected by the application of a surface tackifier, rock mulch, erosion control fabric, and/or other means approved by the Division. An undisturbed drainage ditch has been constructed at the toe of the cut slopes along the north side of the facility pad to divert all undisturbed drainage away from the disturbed area. Diversion ditches are protected using protective barriers to physically separate the disturbed from the undisturbed areas.

Other sediment control measures are discussed in detail in the Hydrology Section.

## *R645-301-533 Impoundments*

As described previously, a sediment pond is utilized to collect storm water runoff from the disturbed area of the surface facility area. The design of the pond is found in Volume 11 Appendix Volume - Hydrology: Appendix B. Pond design encompasses approximately 1.0 acre of disturbed land.

**R645-301-533.200 Foundations**

The pond is designed as an incised structure. Foundations for embankments and impounding structures are constructed as outlined in the Geotechnical Study conducted by AMEC (refer to Volume 11 Appendix Volume - Engineering: Appendix F). A construction summary is given below.

Foundations were constructed by first stripping the area of vegetation and topsoil. Large boulders were removed to a depth of at least two feet below the base of the impounding structure. The natural exposed subgrade was compacted utilizing the excavation equipment used at the pond area. At least three passes were made over the natural soils with this equipment.

Embankment fills were placed in horizontal lifts not exceeding 12 inches in loose thickness. Moderate to large sized boulders were removed prior to placement. Fill was compacted throughout by the double passing of construction, spreading, or hauling equipment over the embankment surface. Side slopes are constructed to not exceed 2 horizontal and 1 vertical.

**R645-301-533.300 Side Slope Protection**

To protect against infiltration, the pond was over-excavated two (2) feet, compacted, and lined with clay on the bottom and sides. Areas where embankment fills were necessary (south and east sides), vegetation was planted or the slopes were armored with rock riprap to protect against erosion. Refer to R645-301-300: Biology for seed mix.

**R645-301-533.700 Plans**

A complete plan and design for the pond is found in Volume 11 Appendix Volume - Hydrology: Appendix B. Total as-built volume of the sediment pond is 1.71 ac. ft.. Sediment volume contribution from the disturbed area is negligible (0.0716 ac. ft./yr.) especially when the sediment basin is accounted for. The pond will be cleaned of sediment when the depth of sediment reaches 40% of the total volume of the pond or 7.4 feet in depth.

There are no underground operations below this pond that could potentially impact the structure. The pond will be utilized during the life of the mining operations and will be removed at reclamation.

## *R645-301-534 Roads*

**Left Fork Rilda Canyon:** The Left Fork Rilda Canyon Fan Access Road is approximately 1,150 feet in length. It follows the north side of the Left Fork of Rilda Canyon from the turnaround above the Rilda Canyon Portal Facilities to the Left Fork facility pad. The existing road/trail was upgraded to a gravel surfaced road with an average travel width of 11 feet an average grade of approximately 8%. The road was designed in accordance with recommendations from the surface management agency (Manti-LaSal National Forest).

Drainage control is provided by a ditch along the north side of the road. The ditch is armored with type L, D50 = 9" riprap at stations 3+36 to 6+55, 7+69 to 9+89 and 11+82 to 13+96 to comply with DOGM and Forest Service Stipulations (refer to Map 3-9B in Volume 5). Additionally, Map 3-9B, illustrates the typical rip rapped ditch installation. Flows in the ditch are controlled by rip rap. An 18" diameter CMP culvert carries the flow beneath the road and into the natural drainage system. Further information regarding drainage controls along the access road is found in Volume 3: Appendix VII, Surface Runoff Control Plan, prepared by Hansen, Allen & Luce.

The road and culverts will be removed during final reclamation from the site and the Forest Development Trail will be re-established. Refer to the Reclamation Plan for the Left Fork Rilda Canyon fan facilities in Volume 2, Part 4.

**Rilda Canyon Portal Facilities:** Prior to the construction of the facilities pad, a portion of the Emery County Road #306 existed within the proposed boundaries of the Rilda Canyon Portal Facilities. This road runs approximately 3.0 miles from the Huntington Canyon road, Highway 31, to the turnaround area in the Left Fork of Rilda Canyon. It is owned and maintained by Emery County Special Service District No. 1. A portion of this road has been temporarily restricted for public use in order to allow PacifiCorp to conduct mining and reclamation operations. The restricted use area starts approximately 1/4 mile west of the cattle guard and extends approximately 2,300 feet to the mine gate in the left fork of Rilda Canyon (refer to Figure R645-301-500c).

As this restricted use area cuts off public access to the Forest Service trail system in the canyon, PacifiCorp has entered into an agreement with Emery County (Agreement #1) to construct a new trailhead and parking area east of the mine facilities. PacifiCorp established a trail that by-passes the mining facilities and connects into the existing Forest Service trail system. Upon reclamation, the trail will be left in place and the road will be relocated to its original location. (Refer to original design of road in Volume 11 Appendix Volume - Engineering: Appendix G

All roads associated with the Rilda Canyon Portal Facilities have been designed to ensure environmental protection and safety appropriate for their planned duration and use, including consideration of the type and size of equipment used. The design and construction of the roads incorporate appropriate limits for surface drainage control, culvert placement, culvert size, and all design criteria established by the Division and Forest Service. Actual construction drawings, including plans for primary road construction, for the Rilda facilities were developed by Jones and DeMille Engineers and can be found in Volume 11, Appendix Volume 11A – Engineering, Appendix H. Safety factors that apply to the Hilfiker Retaining Wall are outlined in this appendix.

### *R645-301-535 Spoil*

For a discussion on spoil of the Deer Creek Mine, refer to Vol. 2, Part 3 of the MRP.

### *R645-301-536 Coal Mine Waste*

~~Underground development waste, coal processing waste, and excess spoil will continue to be disposed of in accordance with plans approved by DOGM and MSHA. There are no plans to return coal processing wastes to the underground workings at the Deer Creek Mine. All coal mine wastes (waste rock) will be removed from the mine through either the Deer Creek portals or the Rilda Canyon portals and disposed of at the Deer Creek waste rock site in Huntington Canyon. Refer to Volume 10 of the Deer Creek MRP for a full discussion of the design, construction, and maintenance of the waste rock site.~~

~~A temporary waste rock storage facility is located on the surface at the Rilda Canyon portal facility in Rilda Canyon and noted on Map 500-3 as "Waste Rock". The capacity of the waste rock bunker is approximately 125 cu. yds. The waste rock will be hauled to the Deer Creek Waste Rock Site as the bunker reaches its capacity. Refer to construction drawings in Volume 11, Appendix Volume 11A – Engineering, Appendix H.~~ The Deer Creek Mine ceased production in January 2015. The southern portion of the mine was separated (by the construction of the 3rd North cross-cut 138 seals) from the Mill Fork Area and the portals at the Deer Creek canyon facility. The only active portion of the Deer Creek Mine is accessed through the Left Fork portals and Rilda Canyon Portal Facilities. Ventilation and water pumping activities are the only operations occurring in the North Rilda and Mill Fork areas of the underground mine. Therefore this section is no longer applicable. All non-coal waste generated at the Rilda Canyon facilities will be handled as outlined in R645-301-528.330.

### *R645-301-537 Regraded Slopes*

There will be no spoil or underground development waste used to regrade slopes to achieve approximate original contour. Slopes for the Rilda Canyon Portal facilities will be constructed using the rock, subsoil and topsoil material.

## R645-301-540 RECLAMATION PLANS

Reclamation of the Left Fork Fan Facility is detailed in Volume 2, Part 4 of the Deer Creek MRP. The reclamation of the Rilda Canyon Portal Facilities is detailed in the following sections.

### *R645-301-541 General*

As required by R645-301-540, the applicant intends to conduct final reclamation as follows:

1. Provide for a mine water drainage system.

2. Remove existing structures.
3. Remove buried diversion systems, where necessary, and provide 100yr/6hr storm event channels.
4. Re-contour the disturbed area to blend in with the existing surroundings.
5. Stabilize all fill structures.
6. Reconstruct Emery County Road #306
7. Reduce sediment loading to receiving streams by incorporating Best Management Practices (BMP's).
8. Vegetate all disturbed areas to meet minimum requirements of plant cover, diversity and production as compared to the reference areas.
9. Meet the stated post-mining land use.
10. Achieve bond release.

**R645-301-541.100 Mine Closure**

At the completion of mining and prior to sealing portals at the Right Fork facility, PacifiCorp must address the issues related to the management of intercepted ground waters. A permanent post-mine gravity discharge is proposed at the Deer Creek portals and at the North Rilda Canyon Right Fork portals. Design for the Deer Creek portal seals is found in Volume 2. These facilities were constructed in May 2015. The design for sealing the Right Fork portals is found in the Figures Tab as Figure R645-301-500d. Diversions have been constructed inside the mine workings to ensure all ground water is diverted to the portals. Screens and rock check dams will be used to filter out debris from plugging the French drain system (see figure R645-301-500d) in each of the portals. Mine water discharge quality and quantity is better described in the Hydrology Section of Volume 12. The design of the discharge facility at the Right Fork portals is described below.

It is projected that intercepted water will naturally flow out of the Right Fork portals. However, a discharge permit cannot be issued for the Right Fork portals because the portals are located within a Category 1 Water Designation (see definition in UAC R317.2). Therefore, appropriate management of the intercepted ground water must be established to allow for the mine to cease operations and seal the mine.

PacifiCorp originally proposed to build water-retaining bulkheads inside the mine to contain all of the intercepted ground water in the underground workings in perpetuity. However, those efforts (since late 2014) were rejected by the Mine Safety and Health Administration (MSHA) and DOGM in April 2016. The rejection of those plans required PacifiCorp to develop alternative plans to manage intercepted ground water and allow this water to drain from the Right Fork portals.

To comply with state and federal policy and regulation, PacifiCorp proposes to construct a 5.6 mile 10 inch high-density polyethylene (HDPE) gravity flow water pipeline from the North Rilda Canyon Right Fork portals to the Raw Water Pond at the Huntington

Power Plant. The pipeline will be constructed within the existing Emery County Road #306 right of way for 12,553 feet (2.4 miles), and within the State Route (SR-31) right of way for 14,537 feet (2.8 miles). This activity will disturb approximately 9.6 acres (pipeline route = 12 feet x 5.6 miles, proposed treatment plant area = 250 feet x 250 feet). However, because the pipeline will remain installed in perpetuity, no reclamation is planned for this structure. The pipeline corridor will be located within the Deer Creek Mine permit area (see permit description in Appendix G of the Legal/Financial Volume).

Flow meters will be placed on each end of the pipeline (see design) for flow comparison and leak detection. Vent pipes will be placed strategically along the pipeline to ensure no vapor locking occurs and water continues to flow freely. A tee will is planned near the raw water pond and used to redirect the water to the Huntington River when the quality allows a discharge into Huntington Creek and approval is granted by the Utah Division of Water Quality (UDWQ) through the Utah Pollution Discharge Elimination System (UPDES). At the time of this writing, the UDWQ is in the process of determining water quality limitations and parameters for monitoring. Monitoring of those parameters shall be made at this location.

**R645-301-541.300 Structure Removal**

Following the completion ~~of mining~~ of sealing the mine and constructing the pipeline, work will begin on the demolition of surface facilities. All structural steel, metal siding and other building materials except concrete will be dismantled and disposed of off the permit area. These structures include, but are not limited to:

- Fan and fan housing
- Fuel storage tank
- Substations
- Oil storage tank
- Fences
- Covered Storage Bins
- Rock dust silo
- Coal and Non-Coal Waste Bins
- Facilities Pad and MSE Wall

All foundations and structures built of concrete will be broken up and buried on-site, permanently stored underground, or taken to the waste rock site for disposal. There is approximately 3,046 cy of in-place concrete at the Rilda Canyon Portal Facility. It is estimated that the density for in-place concrete is approximately 150 lbs/ft$^3$. For crushed concrete, the estimated density is approximately 110 lbs/ft$^3$. The volume of crushed concrete increases the volume of in-place concrete about 27%. Using these density estimates, the volume of concrete to dispose at the Rilda Canyon Portal Facility will be approximately 3,868 cy. Any excess demolition material will be used to backfill the portals or taken to the waste rock site for disposal. All asphalt material from the disturbed area will be excavated and taken to a permitted class IV landfill. For cut and fill quantities, refer to Table 500-1 above and R645-301-553 and Map 500-4 for cross-sections.

### *R645-301-542 Narratives, Maps, and Plans*

A detailed timetable for the completion of each major step in reclamation is outlined in R645-301-300: Biology, Table 300-5. Pre-reclamation surface configurations for the Rilda Canyon Portal Facility are located on Maps 500-3 and 500-4. These drawings show the location and extent of surface disturbances due to coal mining and reclamation activities at the portal facility. A detailed plan for backfilling, soil stabilization, compacting and grading is outlined below in R645-301-553, Backfilling and Grading. Certified contour maps, cross-sections, and soil placement maps can be found in the map sections of this volume.

**R645-301-542.600 Roads**

Emery County road #306 within the area of the surface facilities will be reconstructed as part of the post mining land use. The road will be replaced in the approximate original location that it existed prior to the construction of the facilities area. The road will be reconstructed as per the designs of Emery County Special Service District #1, Change Order No. 1, November 1994. These designs are the property of Emery County. A copy can be reviewed in Volume 11 Appendix Volume - Engineering: Appendix G. The mine water discharge pipeline below the mine site shall be constructed on the north shoulder of the road and cross to the south side of the road just below the cattle guard at the turnaround (refer to design in Volume 11 A, Appendix Volume, Engineering Section, Appendix I). All sections of the pipeline below the mine site will be confined to the boundaries of the county and state road ROW's. All drainage structures under the reconstructed portion of the road will be replaced. Sediment control will be that control stated in R645-301-552, Permanent Features and R645-301-553.100, Disturbed Areas.

## R645-301-550 RECLAMATION DESIGN CRITERIA AND PLANS

Reclamation activities at the Rilda Canyon Portal Facility will include plans and designs for 1) Casing and sealing of portals, 2) Permanent features, and 3) Backfilling and grading. These plans and designs are outlined below.

### *R645-301-551 Casing and Sealing Underground Openings*

The Rilda Canyon Portal Facility has a total of two (2) portals of which one (1) is a blowing fan installation. These portals are located on the surface facility map, Map 500-3. The plan for sealing these portals consists of a permanent ~~MSHA-approved~~, plug-type seal with at least 25 feet of non-combustible material compacted, to the extent possible, to form an earthen plug (see Figure R645-301-500d in the Figures Section).

As mining is completed and the mine is closed, PacifiCorp will need to manage the intercepted mine water that emanates from the north and east ends of the Mill Fork Area.

Because the elevation of the portals at the Rilda Canyon Portal Facility drainage from the Mill Fork Area workings will flow toward these portals.

PacifiCorp attempted to manage the intercepted water by designing water-retaining bulkheads to contain all of the intercepted groundwater in the underground mine workings in perpetuity. Efforts undertaken since late 2014 to obtain permission from the Mine Safety and Health Administration (MSHA) and the Division to permanently retain intercepted groundwater underground with concrete bulkheads and possibly to direct overflow water to the Deer Creek Canyon were rejected in April of 2016. MSHA and the Division will not allow any water retention as part of the Deer Creek closure plans; therefore, water must be directed to the portals to flow unimpeded out of the mine. This response by the agencies necessitates that PacifiCorp develop other alternatives to manage intercepted groundwater that would otherwise discharge from the Rilda Canyon portals in violation of Utah Annotated Code R317-2 of the water quality regulations.

PacifiCorp is now planning and preparing for the intercepted mine water to drain from the portals at the Rilda Canyon Portal Facility in compliance with Utah Coal Regulations of R645-301-731.521. And, to be compliant with the Antidegradation Policy criteria, the mine discharge water may not be discharged into the Category 1 waters of Rilda Canyon. Therefore, because this criteria and concerns for the water quality of the discharge, PacifiCorp is proposing to collect the mine water discharge at the portals and transport it via buried pipeline to the Huntington Power Plant and consume it as part of the electric generation processes. For a more detailed discussion of the quantity and quality of the mine discharge, refer to Volume 12, Hydrology Section.

Figure R645-301-500d includes a French drain designed behind portal plugs for collection of mine water discharge. Each portal entry design includes two (2) 100 foot long perforated 14" dia. HDPE pipes installed and includes a safety overflow system. The perforated pipe will be covered with 3 feet of 4"-6" drain rock. Two solid 14" dia. HDPE pipes will be installed through the portal plug connecting the French drain system to the drain pipe (refer to the desigh in Volume 11 A, Appendix Volume, Engineering Section, Appendix I). The drain pipe will transfer all mine water drainage down and adjacent to the Emery County road #306 to Highway 31. Along Highway 31, the pipeline will be installed adjacent to road and be routed to the diversion bridge at the Huntington Power Plant. The pipeline will cross the bridge and be routed to the Raw Water Pond where it will discharge.

The earthen plugs will extend out of the portals and be graded to match the topography that existed prior to mining and reclamation activities in this area. ~~Since the portals have been developed post-SMCRA, the~~ There are no ~~associated~~ highwalls ~~will be completely eliminated by the reclamation activities~~ associated with the Right Fork portals. No coal seam has been exposed. All concrete materials that are crushed and removed from the pad areas, storage bunkers, etc. will be permanently disposed of ~~within the two portals facility portals~~ on-site or transported to an approved landfill. Compliance to MSHA requirements for

ventilation will be followed during this backfilling activity. Backfilling and grading of the portals and mine site is detailed below.

### *R645-301-552 Permanent Features*

Small depressions (pocks) will be constructed to retain moisture, minimize erosion, create and enhance wildlife habitat, and assist revegetation. The pocks will be constructed with a track-hoe or similar machinery and placed in random order. The pocks will measure approximately 1.5 feet deep by 3.0 feet in diameter. Pocking techniques and sediment loss is explained in detail in the Soil and Hydrology sections.

### *R645-301-553 Backfilling and Grading*

Once the structures have been removed and the portals sealed as outlined in Figure R645-301-500d, backfilling and grading will commence. Reclamation will be accomplished by systematically reclaiming the Rilda Canyon Portal Facility starting at the uppermost part of the disturbed area, working down. Prior to initiating backfilling and grading process at the facility area, the entire area will ripped with a dozer to a depth of approximately two feet to reduce soil compaction. Various stages of the reclamation process may be occurring simultaneously in different parts of the site. Working from top to bottom will minimize handling and compaction of the material in the reclaimed areas and allow the sedimentation structures below the reclamation work to remain in place. Backfilling and grading the disturbed area of the mine site will be conducted to achieve approximate original contour (AOC) of the entire site. At completion of backfilling and grading, the sediment pond will be removed. The clay liner will be disposed of on-site by burying at least four (4) feet below the final surface configuration. Recontouring will be completed as detailed on Map 500-4. Cut/fill quantities are balanced as outlined in Table 500-2 below. Map 500-5 shows final reclamation topography of the entire mine site.

Table 500-2: Mass Balance of Cut/Fill Volume for Reclamation.

| | Faclilities*/Pond Area | Area (sf) | Volume (cy) |
|---|---|---|---|
| 1 | Total Cut | | 25,553 |
| 2 | Total Fill | | 6,762 |
| **Hard Armor Areas*** ** | | | |
| 3 | Hilfiker Wall | 8,400 | 249 |
| 4 | Boulder Pile | 20,350 | 603 |
| 5 | Sediment Basin Outslope | 4,020 | 119 |
| 6 | Sediment Pond Outslope | 4,375 | 130 |
| 7 | Total Volume to be Reduced from Cut | | 1,101 |
| **Topsoil Pile**** ** | | | |
| 8 | Total | | 7,000 |
| **Mass Balance Calculations** | | | |
| | Total Cut (Items 1-7+8) | | 31,452 |
| | Total Fill (Item 2) | | 26,762 |
| | Difference | | 4,690 |
| | % Difference***** | | 15% |

**NOTES:**

* As-built volumes calculated utilizing aerial survey data and Carlson Software.

** Includes approximately 18,100 cy of imported rock material used during the construction of the Hilfiker wall. Imported material will be placed at bottom of all fill areas.

*** Boulders in these areas consist of a 40% void. Therefore, a 40% volume in this area (item 4) is subtracted from the total cut (item 1). Depth of the areas average 2ft.

**** Approximately 10 inches of topsoil will be used to cover the topsoil pile footprint to aid in vegetation growth.

***** The excess 4,690 cubic yards will be used to provide additional topsoil depth throughout the site.

Note in the table above, the hard armored areas consist of an estimated 40% void space. This space is accounted for in Item 7 and is subtracted from the total cut in Item 1. The volume of the topsoil pile is added back in which gives an excess of 4,690 cubic yards of material. This additional material will be spread throughout the site to increase the depth (approximately 1½ inches) of the planting medium. Also note that only 7,000 cubic yards is utilized in the reclamation of the mine site when Table 500-1 showed a volume of 7,862 cubic. Approximately 862 cubic yards will be utilized at the topsoil pile site to enhance the growth medium in this area. Depth of topsoil in this area will be approximately 10 inches.

Upon completion of backfilling and grading and topsoil placement, the entire area will be pocked to minimize (or eliminate) erosion and sediment transport from the reclamation site. Pocks will be constructed on slopes of 4:1 or greater using the bucket of a track-hoe or similar machinery to an approximately size of 3.0' diameter x 1.5' deep. Slopes flatter than

4:1 will be roughened using a harrow or similar implement. Reclamation of the soil placement area will be conducted as outlined in R645-301-200.

**R645-301-553.100 Disturbed Areas**

At time of mine closure, an additional disturbed area will be delineated along the Emery County Road #306 and SR 31 and end at the Huntington Plant raw water. An area (250' x 250') will be set aside for the unlikely event that the mine water discharge does not meet water quality standards and must be treated. In this case, PacifiCorp will construct a facility to treat the water to comply with set water quality standards in order to discharge into Huntington Creek. If this facility is constructed, a reclamation bond will be established to cover the cost for reclamation.

As for the reclamation of the mine site disturbed areas, ~~Generally,~~ all slopes are ~~on~~ planned for a 2:1 or less grade. All slopes will be constructed to achieve a minimum long-term safety factor of 1.3 and will prevent unstable slopes. The ~~two highwalls~~ vertical rock outcrop exposed ~~created~~ by the initial portal development will be completely eliminated to meet approximate original contour provisions. All slopes will be compatible with the postmining land use of the area and will provide adequate drainage.

Since the subdrainage areas in the reclaimed area are ephemeral and rarely receive flow, the drainage systems through the site will be armored with rock but not designed as a riprapped channel. Final surface configuration (Map 500-5) will channel any drainage that may occur from the undisturbed area through the reclaimed armored channels. Drainage will then be conveyed to road culverts (refer to Figure R645-301-500c for location) to direct flow beneath the EC#306 (see R645-301-542.600, Roads). Culvert outlets will extend beyond the south side of EC#306. Runoff will then flow overland through the buffer area for an average of approximately 50 feet before contacting Rilda Creek. Silt fences or other approve sediment control will be placed so that the disturbed runoff will be treated prior to entering the Rilda Creek. After two years of vegetation growth, these structures will be removed.

**R645-301-553.130 Slope Stability Analysis**

With the soil conditions, slope, and aspect being similar to that of the Des Bee Dove Mine site, the recommendations made by RB&G Engineering (refer to Des Bee Dove Mine, Appendix XIV, Phase 1 Reclamation, Engineering Section, Appendix C) for slope stability will be used for the Rilda Canyon Portal Facility reclamation. Their analysis assumed strength parameters for foundation fills and embankment fills. It was assumed that the foundation soils consisted of loose to medium dense granular fill extending to a depth of at least 10 feet below the existing level surface. A friction angle of $32^{o}$ with zero cohesion was conservatively assumed for this material. All reclaimed slopes should be equal to or less than 2 horizontal and 1 vertical.

Based upon the results of their analysis and experience in the compaction of similar material in the Phase 1 and Phase 2 Des Bee Dove Mine reclamation project, slope stability can achieve at least a 1.3 safety factor by compacting lifts not exceeding 1 foot in thickness a minimum of four passes with a rubber-tired dozer or sheepsfoot. The

Geotechnical Study by AMEC Earth and Environmental Inc. (Volume 11 Appendix Volume - Engineering: Appendix F) concurs with RB&G recommendations. However, their recommendations use only two passes of construction, spreading, or hauling equipment.

No slope failures have occurred at the Des Bee Dove reclaimed site since completion in 2003.

The forest trail which was constructed in association to the mine facilities will left in place so that recreationalist can park at the existing trailhead below the cattle guard on the Emery County Road #306

As a final step in reclamation of the Rilda Canyon portal facilities, the entire reclaimed area will be seeded and hydromulched as outlined in the Biology Section.

## R645-301-560 PERFORMANCE STANDARDS

Coal mining and reclamation operations will be conducted in accordance with the approved permit and requirements of R645-301-510 through R645-301-553.

# PacifiCorp

# Deer Creek Mine

# C/015/0018

**Amendment to Add a Post-Mining Water Discharge at Rilda Canyon Portals, Permit Area Change to Include Discharge Pipeline Route and Potential Treatment Facility Area, PacifiCorp, Deer Creek Mine, C/015/0018, Emery County, Utah**

**<u>Volume 11, R645-301-500 Engineering, Figures Tab</u>**

**Replace Figure R645-301-500d**

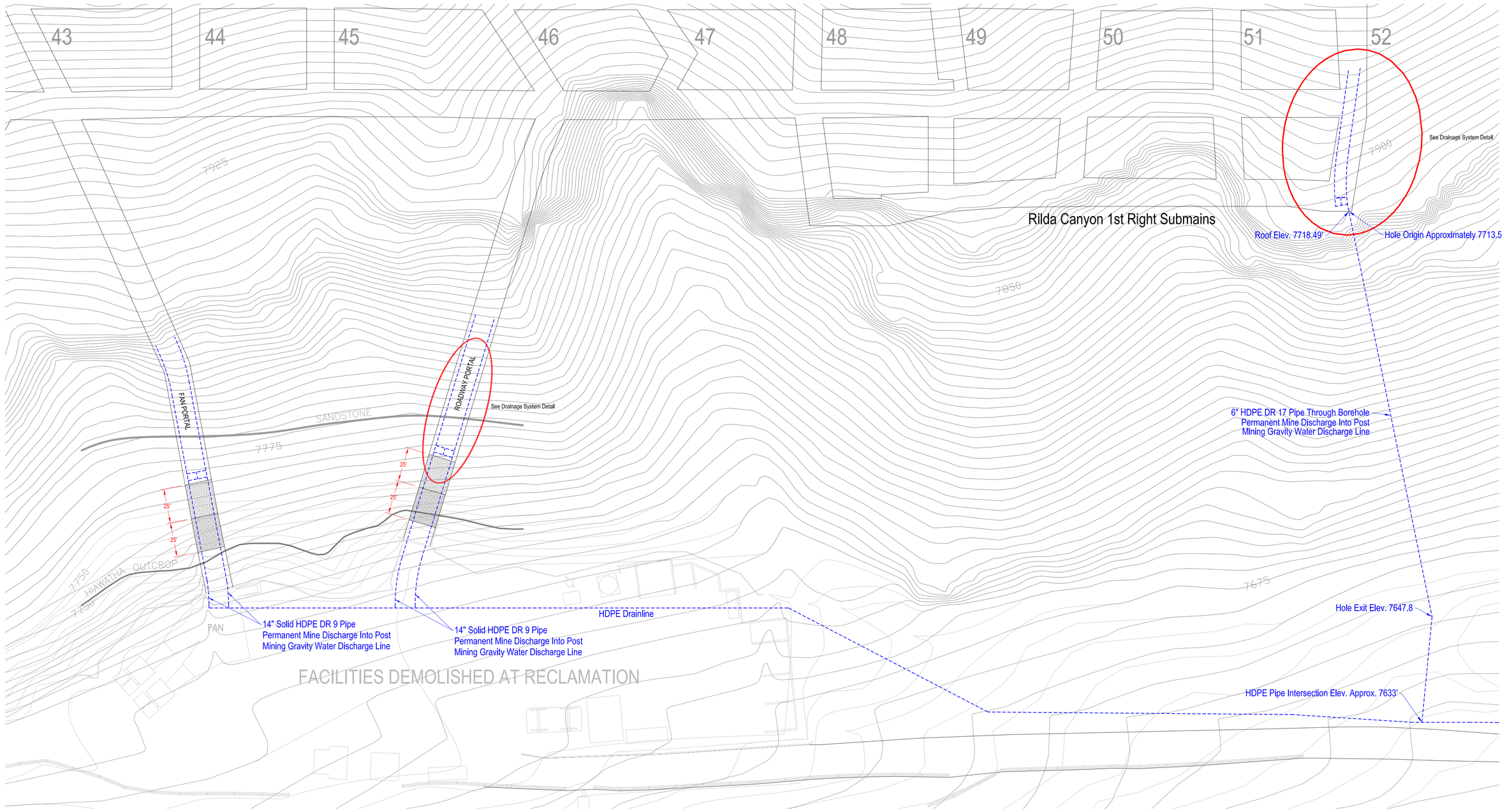


Rilda Canyon
Plan View of Fan & Intake Portals (Surface Facilities)
Scale: 1"=40'

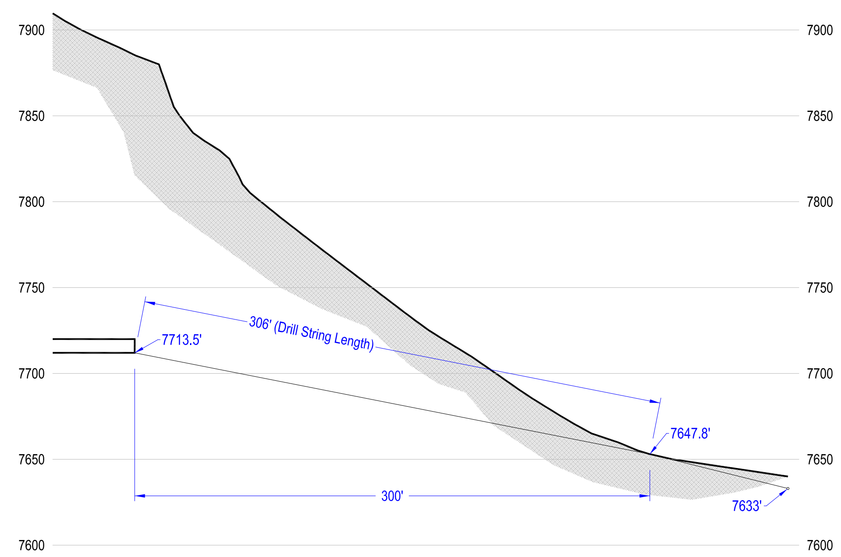


Borehole Cross Section

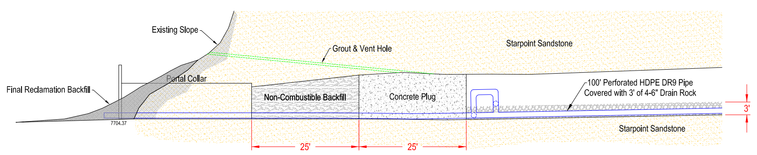


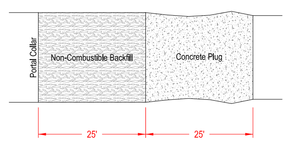


Fan Portal Plan & Profile
Scale: 1"=20'

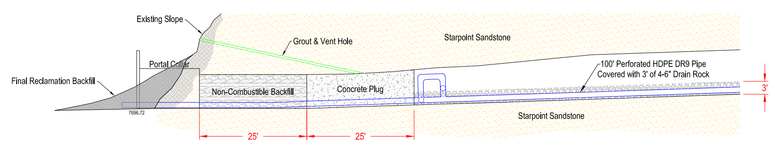


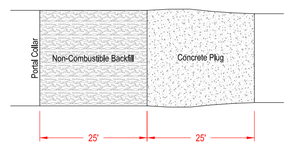


Roadway Portal Plan & Profile
Scale: 1"=20'

1. Holes drilled, 2 each 2"Ø around perimeter 180° apart
2. 2 more 2"Ø holes drilled around perimeter 180° apart rotated 90° from previous holes and 12" center to center
3. Repeated for the entire length of HDPE pipe

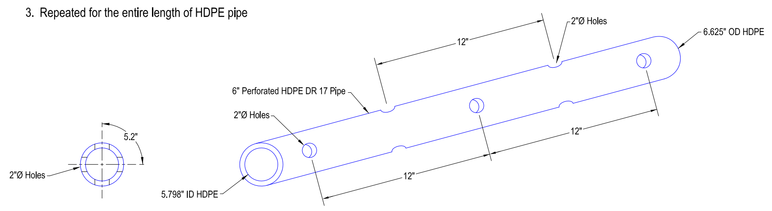


Rilda Canyon 1st Right Submains Cross-Cut 52
Detail of 6" Perforated HDPE Pipe
Not to Scale

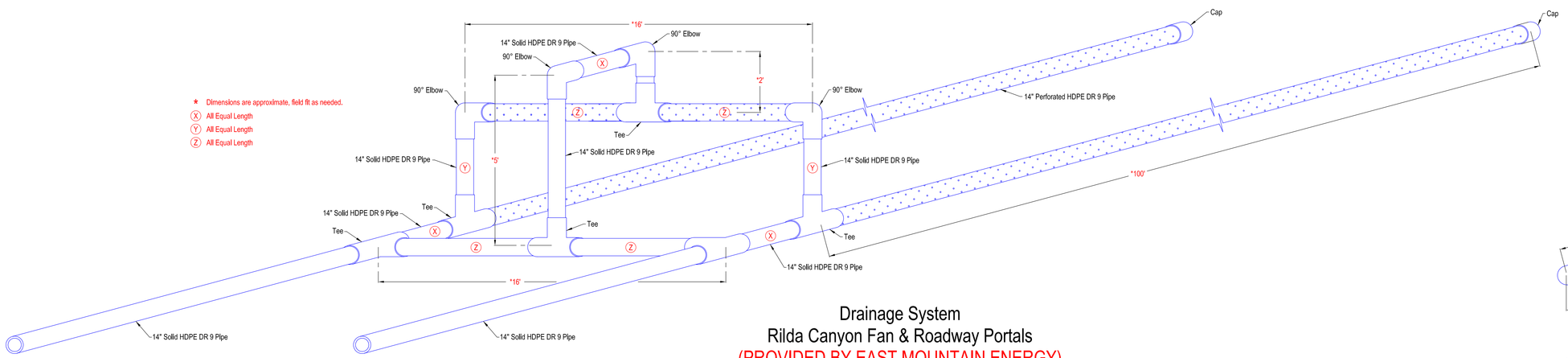


Drainage System
Rilda Canyon Fan & Roadway Portals
(PROVIDED BY EAST MOUNTAIN ENERGY)
Not to Scale

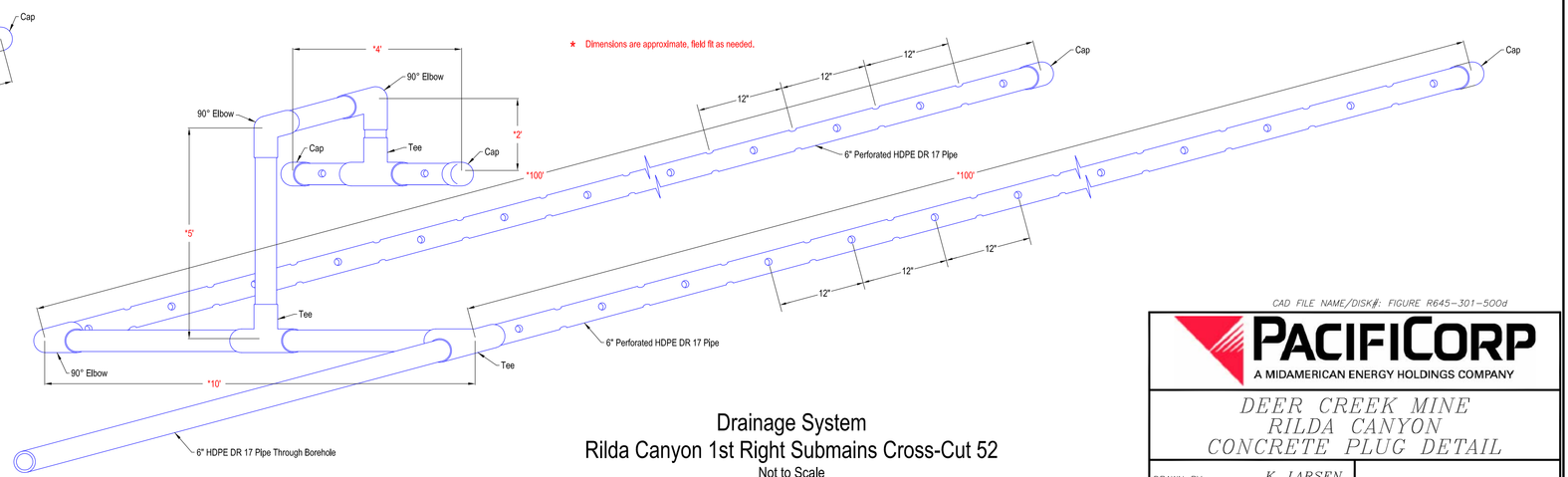


Drainage System
Rilda Canyon 1st Right Submains Cross-Cut 52
Not to Scale

CAD FILE NAME/DISK#: FIGURE R645-301-500d

PACIFICORP
A MIDAMERICAN ENERGY HOLDINGS COMPANY

DEER CREEK MINE
RILDA CANYON
CONCRETE PLUG DETAIL

| | | | |
|---|---|---|---|
| DRAWN BY: K. LARSEN | FIGURE R645-301-500d | | |
| SCALE: AS NOTED | DRAWING #: | | |
| DATE: JANUARY 12, 2017 | SHEET 1 OF 1 | REV. | |

# PacifiCorp

# Deer Creek Mine

# C/015/0018

**Amendment to Add a Post-Mining Water Discharge at Rilda Canyon Portals, Permit Area Change to Include Discharge Pipeline Route and Potential Treatment Facility Area, PacifiCorp, Deer Creek Mine, C/015/0018, Emery County, Utah**

**<u>Volume 11, R645-301-500 Engineering, Maps Tab</u>**

**Replace Maps 500-1 (sheets 1-3 of 3), 500-2, 500-3, 500-4 (1-4 of 4)**

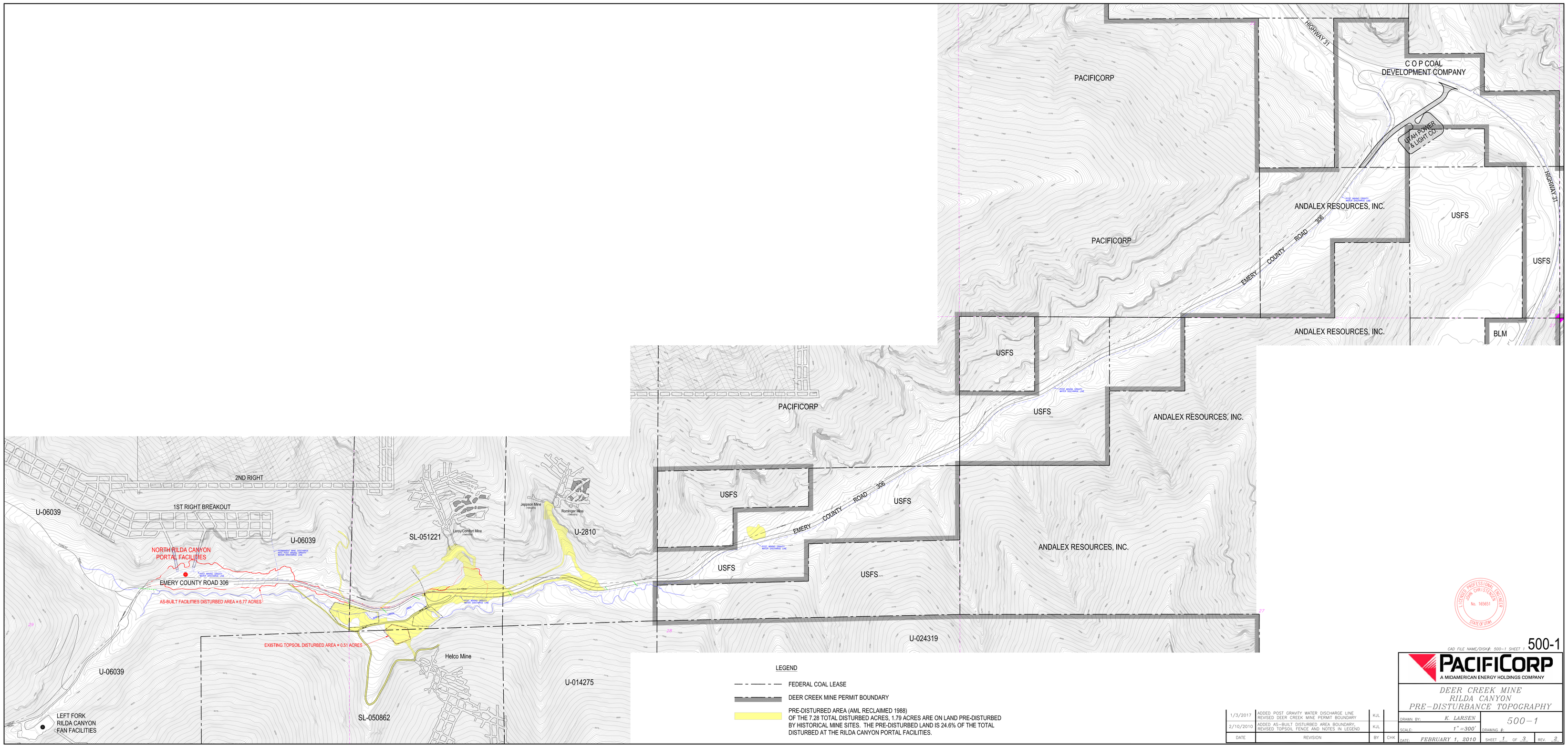
HIGHWAY 31
C O P COAL
DEVELOPMENT COMPANY
PACIFICORP
UTAH POWER
& LIGHT CO.
ANDALEX RESOURCES, INC.
USFS
EMERY COUNTY ROAD 306
BLM
2ND RIGHT
1ST RIGHT BREAKOUT
U-06039
NORTH RILDA CANYON
PORTAL FACILITIES
EMERY COUNTY ROAD 306
AS-BUILT FACILITIES DISTURBED AREA = 6.77 ACRES
EXISTING TOPSOIL DISTURBED AREA = 0.51 ACRES
SL-051221
Leroy/Comfort Mine
Jepson Mine
Rominger Mine
U-2810
Helco Mine
U-014275
SL-050862
U-024319
LEFT FORK
RILDA CANYON
FAN FACILITIES
LEGEND
FEDERAL COAL LEASE
DEER CREEK MINE PERMIT BOUNDARY
PRE-DISTURBED AREA (AML RECLAIMED 1988)
OF THE 7.28 TOTAL DISTURBED ACRES, 1.79 ACRES ARE ON LAND PRE-DISTURBED
BY HISTORICAL MINE SITES. THE PRE-DISTURBED LAND IS 24.6% OF THE TOTAL
DISTURBED AT THE RILDA CANYON PORTAL FACILITIES.
LICENSED PROFESSIONAL ENGINEER
JOHN CHRISTENSEN
No. 165651
STATE OF UTAH
CAD FILE NAME/DISK# 500-1 SHEET 1
500-1
PACIFICORP
A MIDAMERICAN ENERGY HOLDINGS COMPANY
DEER CREEK MINE
RILDA CANYON
PRE-DISTURBANCE TOPOGRAPHY
DRAWN BY: K. LARSEN
500-1
SCALE: 1"=300'
DRAWING #:
DATE: FEBRUARY 1, 2010
SHEET 1 OF 3
REV. 2
1/3/2017 | ADDED POST GRAVITY WATER DISCHARGE LINE, REVISED DEER CREEK MINE PERMIT BOUNDARY | KJL
2/10/2010 | ADDED AS-BUILT DISTURBED AREA BOUNDARY, REVISED TOPSOIL FENCE AND NOTES IN LEGEND | KJL
DATE | REVISION | BY | CHK

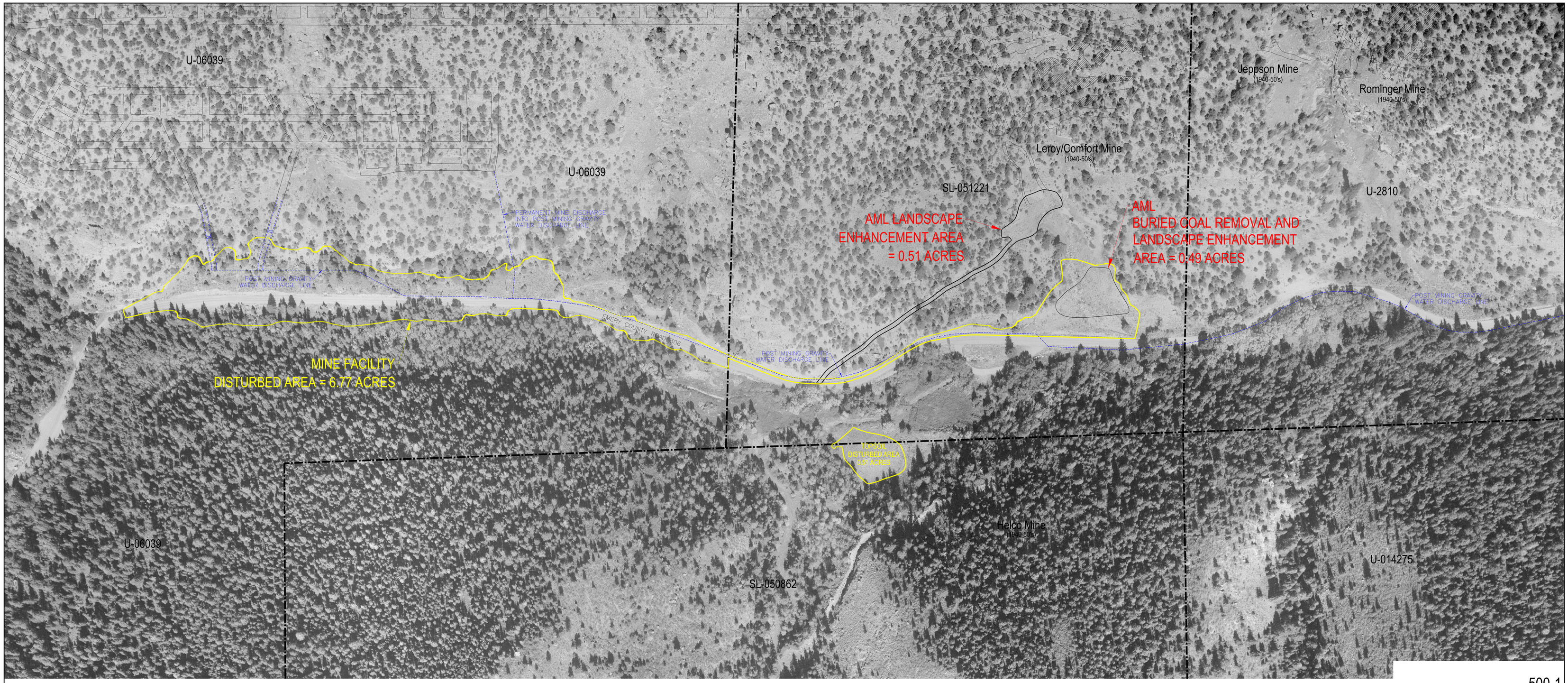


500-1

CAD FILE NAME/DISK#: 500-1 SHEET 2

PACIFICORP
A MIDAMERICAN ENERGY HOLDINGS COMPANY

DEER CREEK MINE
RILDA CANYON
PRE-DISTURBANCE AERIAL

LICENSED PROFESSIONAL ENGINEER
No. 165651
STATE OF UTAH

| DATE | REVISION | BY | CHK |
|---|---|---|---|
| 1/3/2017 | ADDED POST MINING GRAVITY WATER DISCHARGE LINE | KJL | |
| 2/4/2010 | ADDED AS-BUILT DISTURBED AREA BOUNDARY AND AML LANDSCAPE ENHANCEMENT AREAS | KJL | |

DRAWN BY: K. LARSEN
500-1
SCALE: 1" = 100'
DRAWING #:
DATE: APRIL 16, 2010
SHEET 2 OF 3
REV. 2

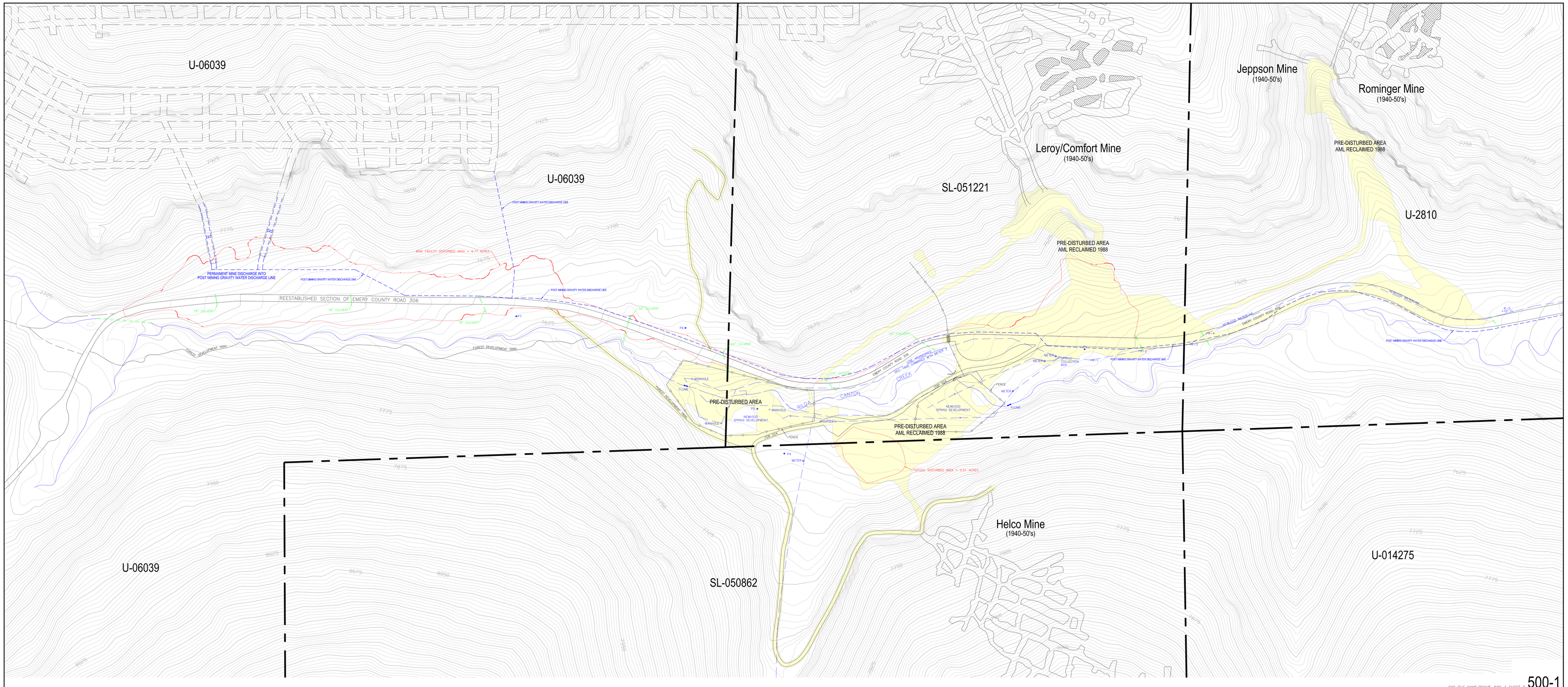


LEGEND

PRE-DISTURBED AREA (AML RECLAIMED 1988)
OF THE 7.28 TOTAL DISTURBED ACRES, 1.79 ACRES ARE ON LAND PRE-DISTURBED BY HISTORICAL MINE SITES. THE PRE-DISTURBED LAND IS 24.6% OF THE TOTAL DISTURBED AT THE RILDA CANYON PORTAL FACILITIES.

LICENSED PROFESSIONAL ENGINEER
JOHN CHRISTENSEN
No. 165651
STATE OF UTAH

CAD FILE NAME/DISK#: 500-1 SHEET 3

500-1

PACIFICORP
A MIDAMERICAN ENERGY HOLDINGS COMPANY

DEER CREEK MINE
RILDA CANYON
PRE-DISTURBANCE TOPOGRAPHY

| DATE | REVISION | BY | CHK |
|---|---|---|---|
| 1/3/2017 | ADDED POST MINING GRAVITY WATER DISCHARGE LINE | KJL | |
| 2/10/2010 | ADDED AS-BUILT DISTURBED AREA BOUNDARY AND REVISED LEGEND NOTATION TO REFLECT AS-BUILT | KJL | |

DRAWN BY: K. LARSEN
SCALE: 1"=100'
DATE: JUNE 16, 2009
DRAWING #: 500-1
SHEET 3 OF 3
REV. 2

# RILDA CANYON FACILITIES - TYPICAL CONSTRUCTION SEQUENCE

EXISTING CONDITION

a) Vegetation Grubbing

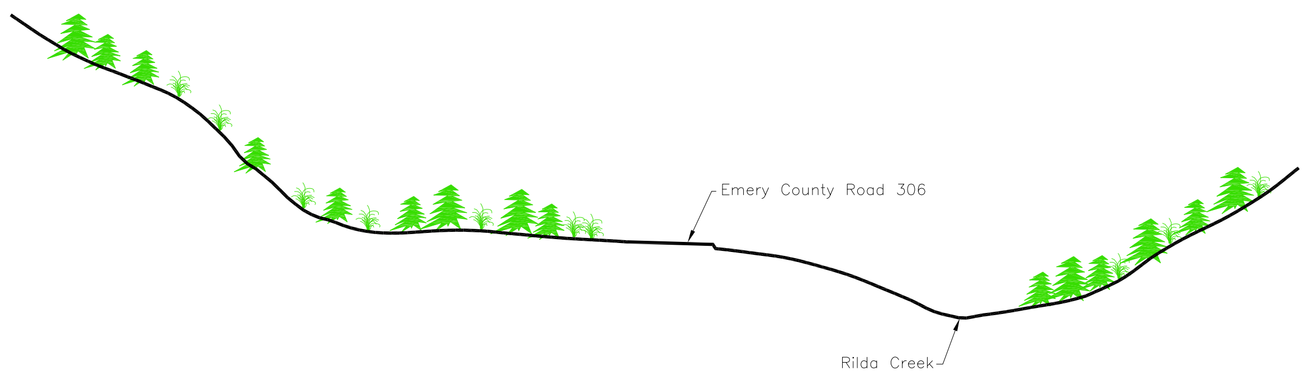


STEP 1

CONDITION AFTER VEGETATION GRUBBING

a) Installation of Temporary Sediment Control (Silt Fences & Basins)

b) Topsoil Stripping

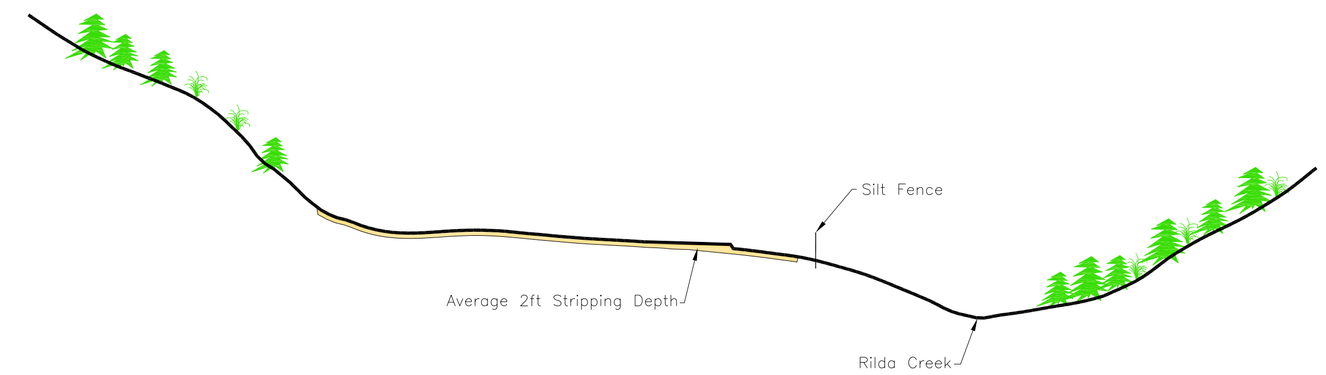


STEP 2

CONDITION AFTER TOPSOIL STRIPPING

a) Subsoil Excavation

b) Backfilling & Grading

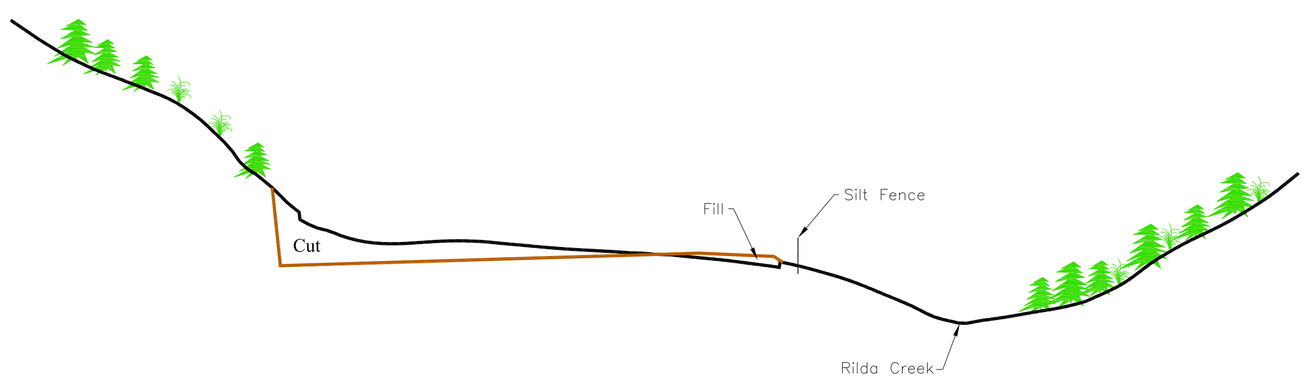


STEP 3

CONDITION AFTER SUBSOIL EXCAVATION

a) Installation of Drainage Controls

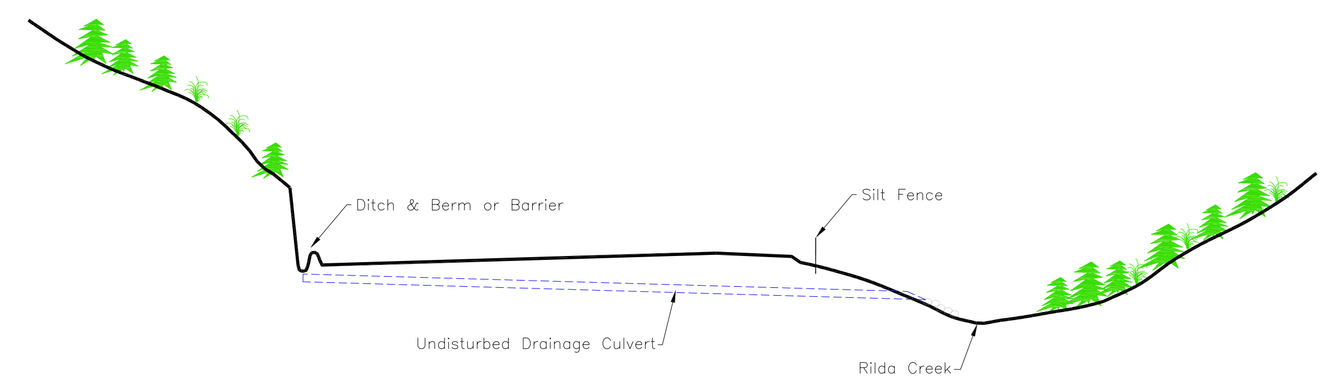


STEP 4

CONDITION AFTER INSTALLATION OF DRAINAGE CONTROLS

a) Portal Development

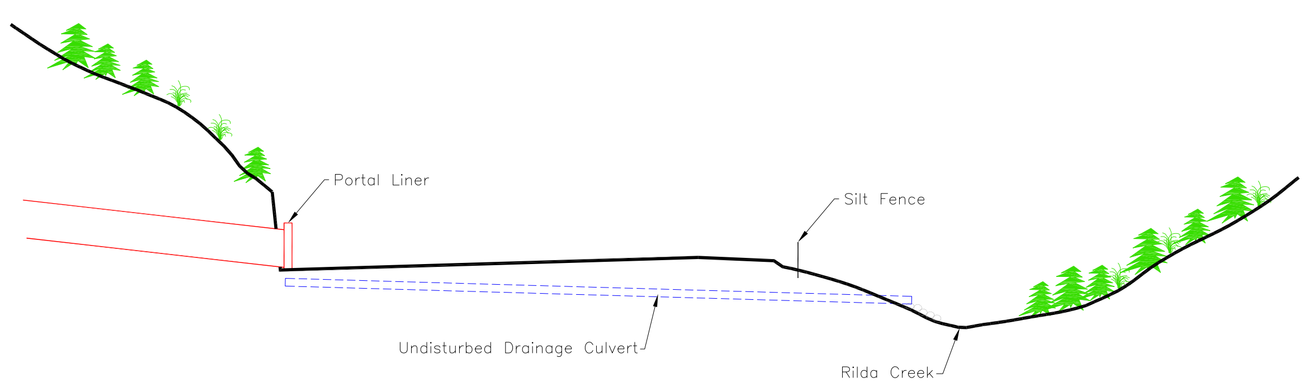


STEP 5

CONDITION AFTER PORTAL DEVELOPMENT

a) Construction of Buildings

b) Jersey Barrier Berm & Perimeter Fence Installation

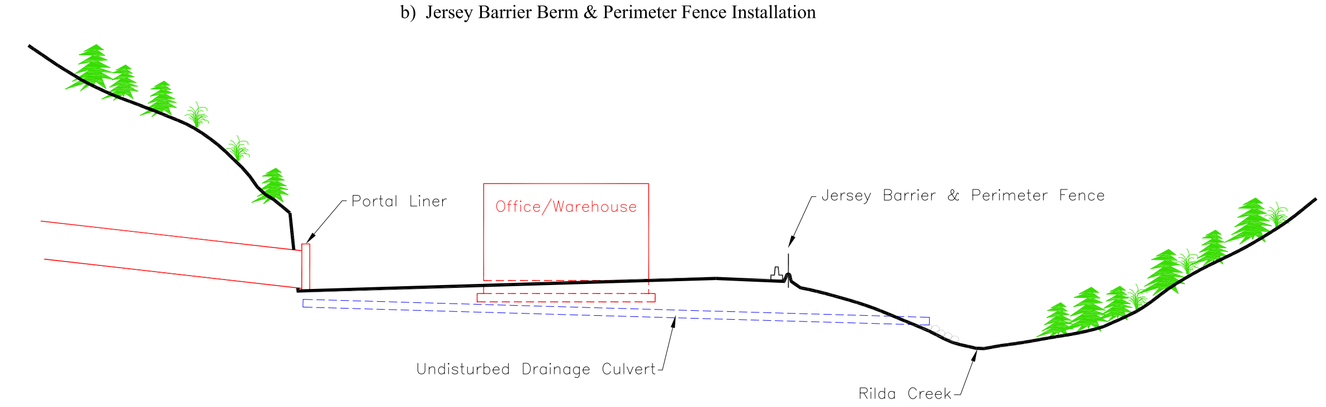


500-2

CAD FILE NAME/DISK#: 500-2

PACIFICORP
A MIDAMERICAN ENERGY HOLDINGS COMPANY

DEER CREEK MINE
RILDA CANYON FACILITIES
SEQUENCE OF CONSTRUCTION

| | | | |
|---|---|---|---|
| DRAWN BY: | K. LARSEN | 500-2 | |
| SCALE: | NONE | DRAWING #: | |
| DATE: | JANUARY 11, 2017 | SHEET 1 OF 1 | REV. --- |

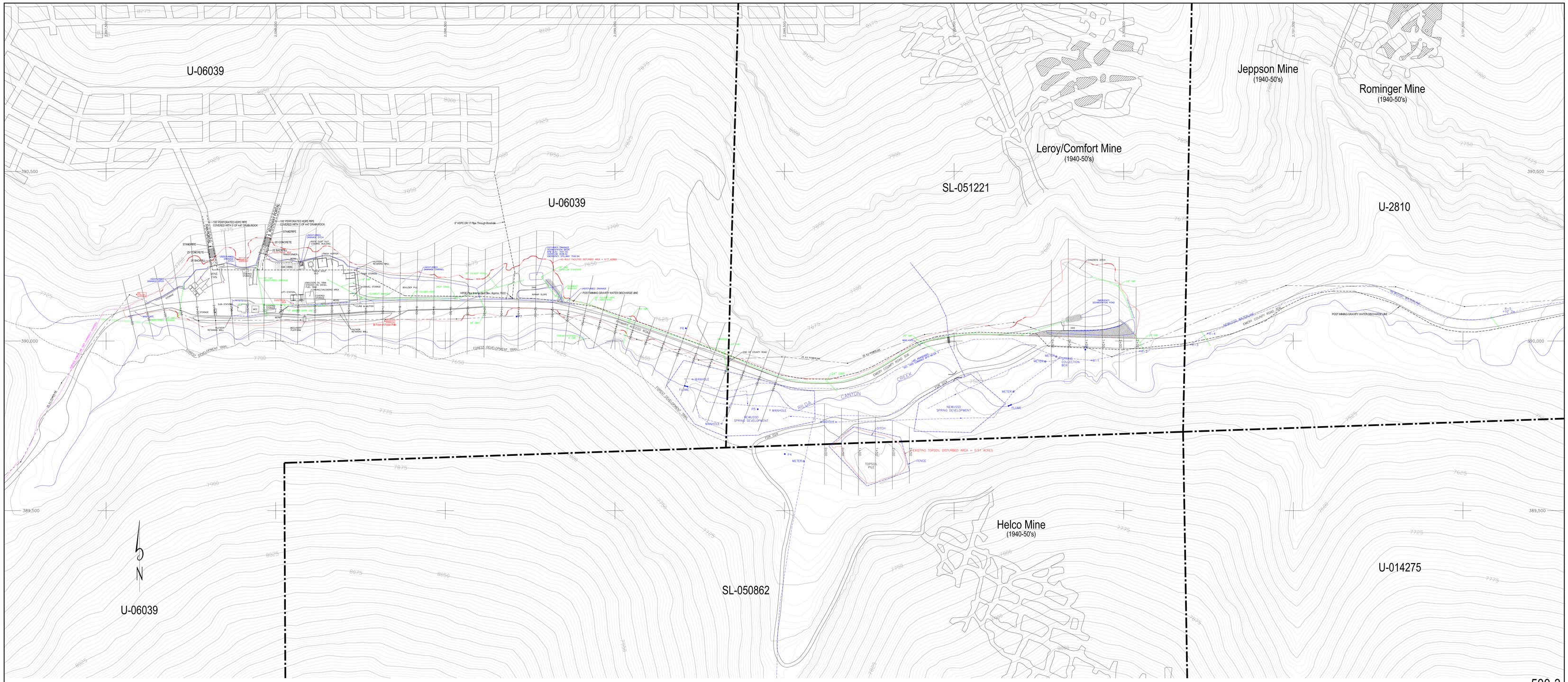


LEGEND

- BOLLARD
- JERSEY BARRIER
- LIGHT POLE
- POWER POLE
- DROP INLET
- CULVERT
- RIP RAP
- FENCE
- DIRT BERM

LICENSED PROFESSIONAL ENGINEER
JOHN CHRISTENSEN
No. 165651
STATE OF UTAH

| DATE | REVISION | BY | CHK |
|---|---|---|---|
| 12/1/2016 | ADDED POST MINING GRAVITY WATER DISCHARGE LINE | KJL | |
| 5/12/2010 | CHANGED CULVERT NOTATIONS TO CMP | KJL | |
| 2/15/2010 | REVISED TO REFLECT THE AS-BUILT CONDITIONS, DISTURBED AREA BOUNDARY AND TOPOGRAPHY | KJL | |

CAD FILE NAME/DISK# 500-1 SHEET 1

500-3

PACIFICORP
A MIDAMERICAN ENERGY HOLDINGS COMPANY

DEER CREEK MINE
RILDA CANYON
SURFACE FACILITIES

DRAWN BY: K. LARSEN

500-3

SCALE: 1" = 100'

DRAWING #

DATE: JUNE 18, 2009

SHEET 1 OF 1

REV 3

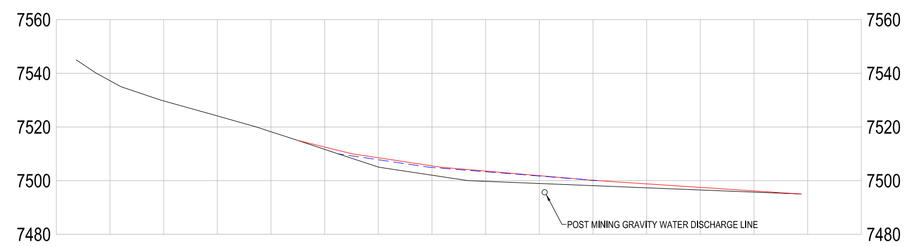


2+50

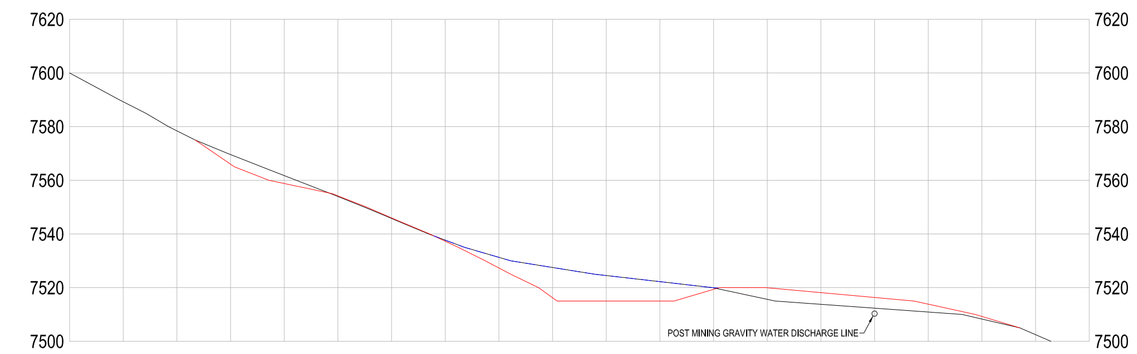


1+00

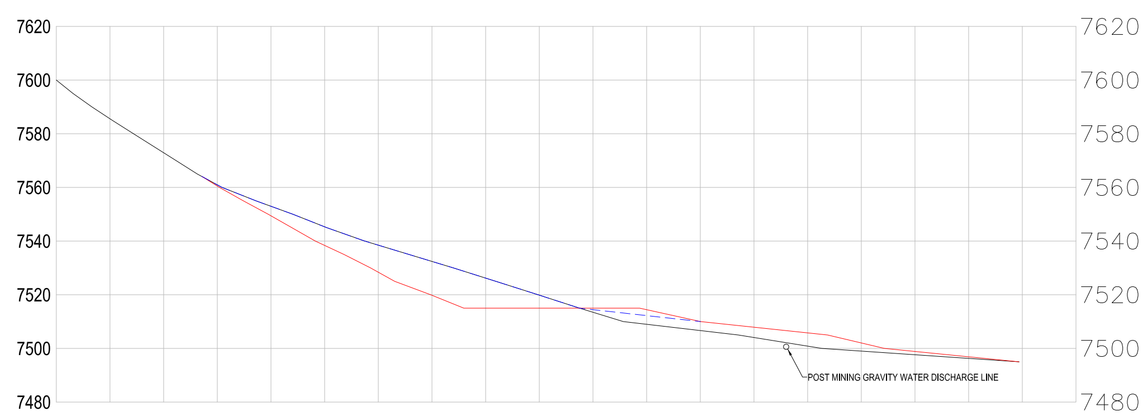


2+00

0+50

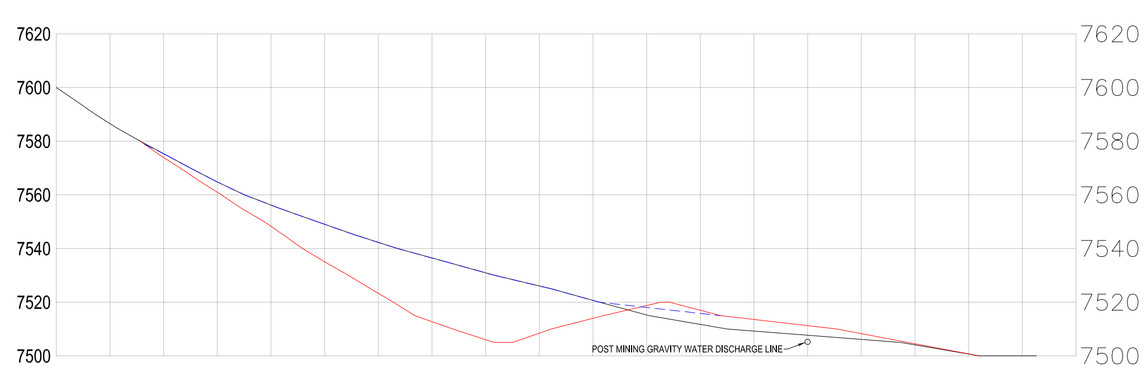


1+50

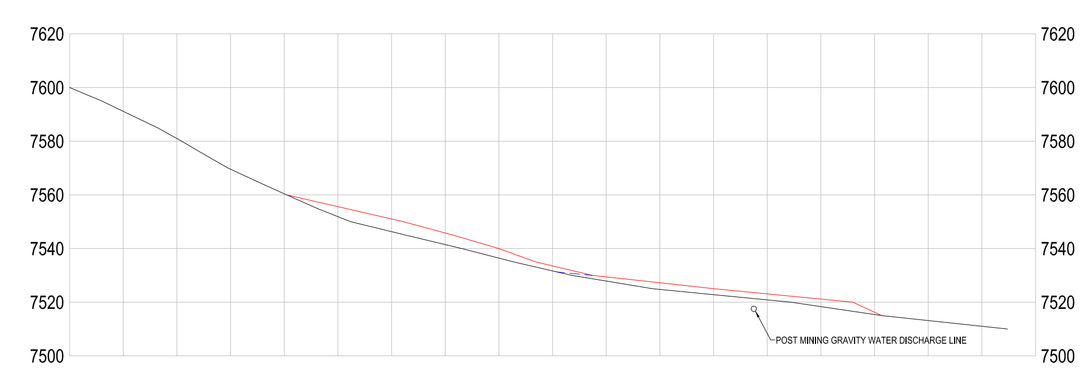


0+00

NOTES

1. PRIOR TO THE SEDIMENT POND CONSTRUCTION THE EXISTING COAL WASTE IN THIS AREA WAS REMOVED AND HAULED TO THE DEER CREEK WASTE ROCK SITE
2. THE FINAL RECLAMATION LINE CAN THEN BE DETERMINED AND WILL CLOSELY RESEMBLE THE EXISTING SLOPE
3. CROSS SECTIONS REFERENCED FROM 500-5

LEGEND

- PRE-EXISTING LINE
- POST CONSTRUCTION LINE
- FINAL RECLAMATION LINE

500-4

CAD FILE NAME/DISK#: 500-4 SHEETS 1-4

PACIFICORP
A MIDAMERICAN ENERGY HOLDINGS COMPANY

DEER CREEK MINE
RILDA CANYON FACILITIES
SEDIMENT POND CROSS SECTIONS

| DATE | REVISION | BY | CHK |
|---|---|---|---|
| 12/6/2016 | ADDED POST MINING GRAVITY WATER DISCHARGE LINE | KJL | |
| 2/19/2010 | REVISED TO REFLECT THE AS-BUILT CONDITIONS | KJL | |

DRAWN BY: K. LARSEN
SCALE: 1"=40'
DATE: MARCH 25, 2009
DRAWING #: 500-4
SHEET 4 OF 4
REV. 1

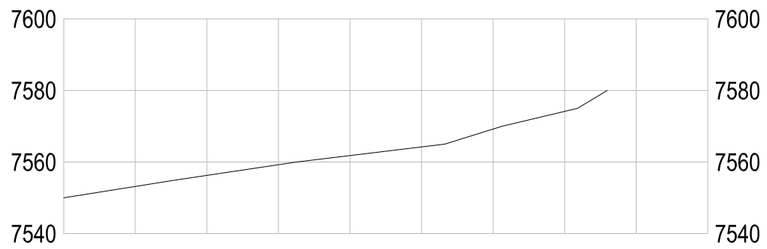


2+50

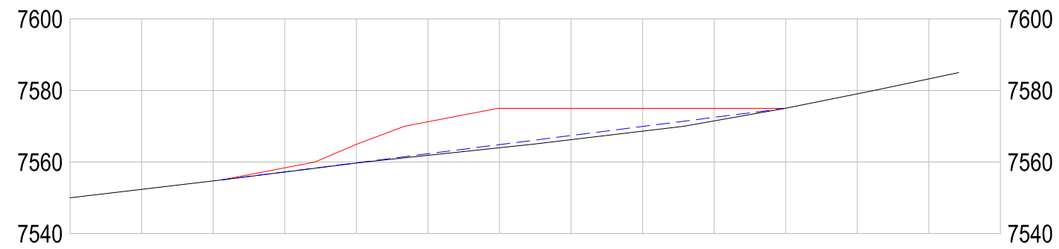


1+00

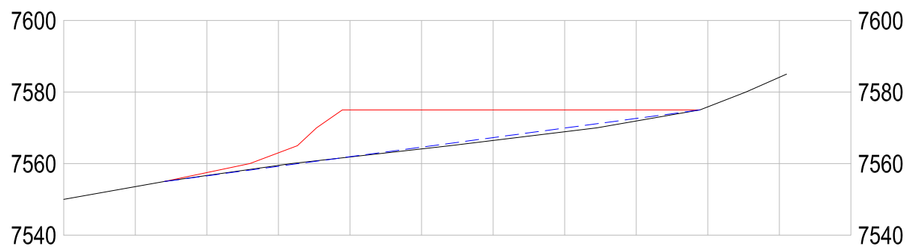


2+00

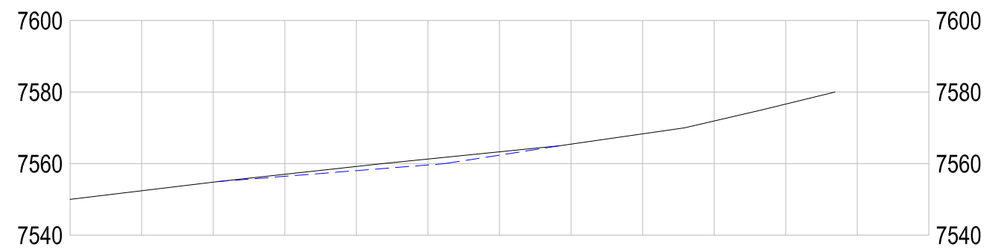


0+50

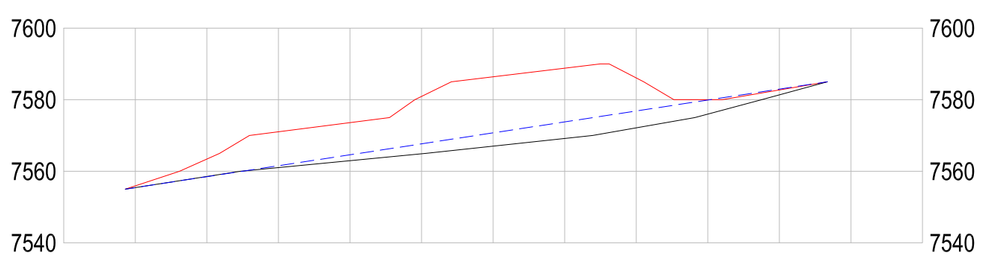


1+50

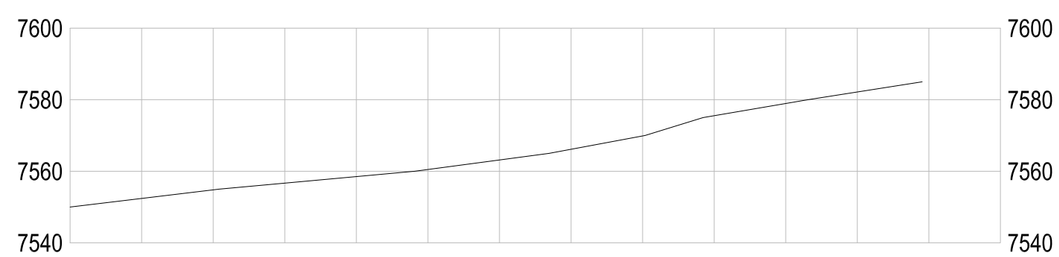


0+00

500-4

CAD FILE NAME/DISK#: 500-4 SHEETS 1-4

NOTES

1. PRE-EXISTING LINE REPRESENTS FINAL RECLAMATION
(NO PLANNED EXCAVATION DURING DEVELOPMENT OF SOIL STORAGE PILES)

2. CROSS SECTIONS REFERENCE FROM 500-5

LEGEND

PRE-EXISTING LINE

POST CONSTRUCTION LINE

FINAL RECLAMATION LINE

| DATE | REVISION | BY | CHK |
|---|---|---|---|
| 2/19/2010 | REVISED TO REFLECT THE AS-BUILT CONDITIONS | KJL | |

PACIFICORP
A MIDAMERICAN ENERGY HOLDINGS COMPANY

DEER CREEK MINE
RILDA CANYON FACILITIES
TOPSOIL STORAGE CROSS SECTIONS

DRAWN BY: K. LARSEN

SCALE: 1"=40'

DATE: MARCH 25, 2009

DRAWING #: 500-4

SHEET 3 OF 4

REV. 1

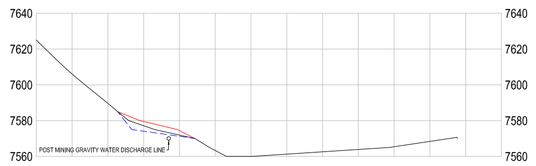


19+50

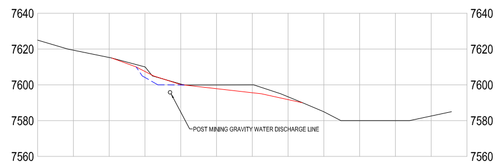


17+00

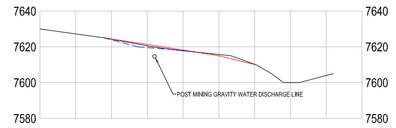


14+50

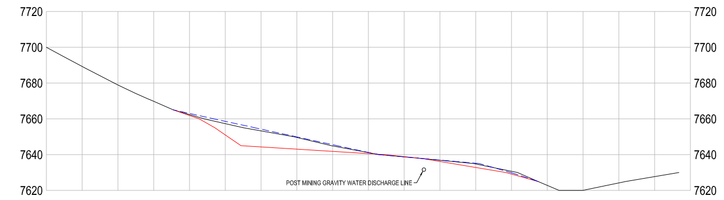


12+00

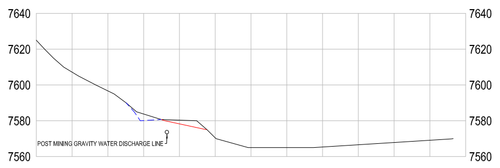


19+00

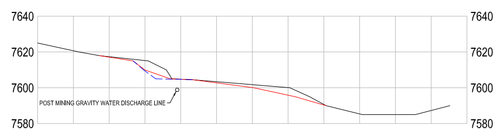


16+50

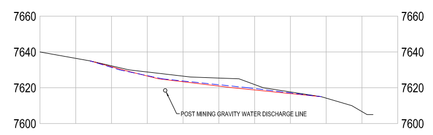


14+00

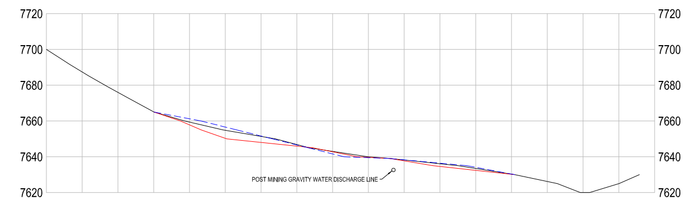


11+50

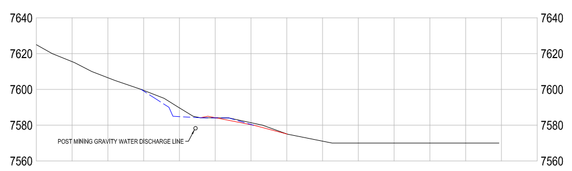


18+50

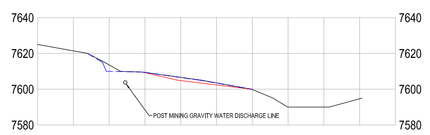


16+00

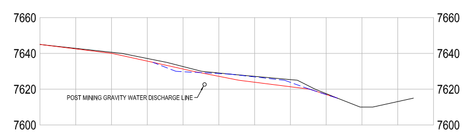


13+50

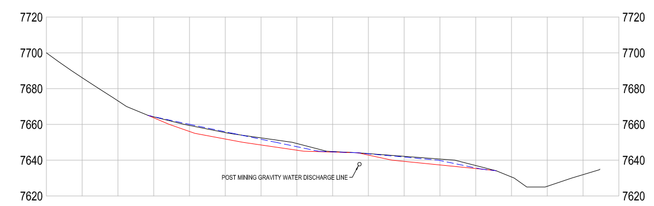


11+00

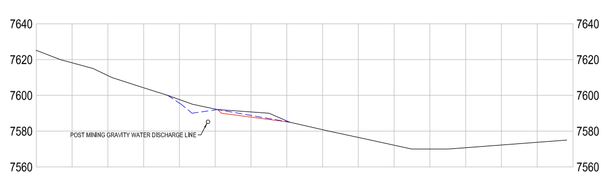


18+00

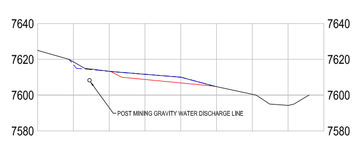


15+50

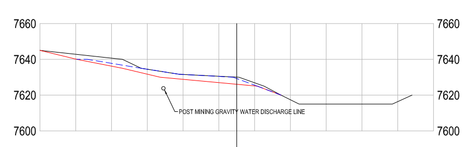


13+00

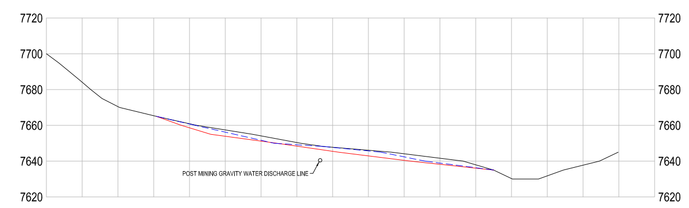


10+50

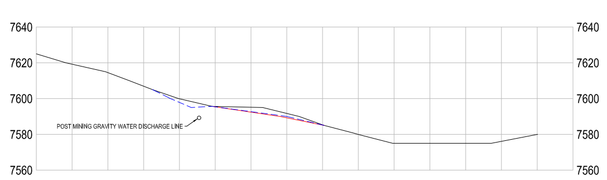


17+50

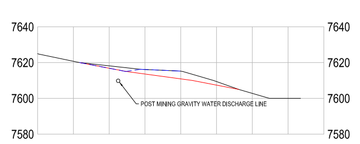


15+00

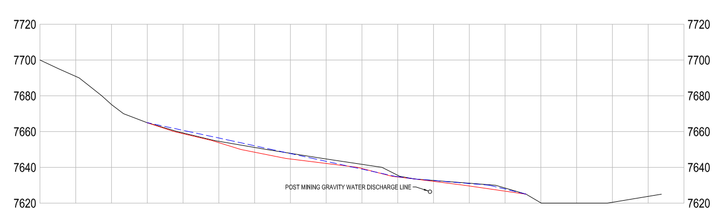


12+50

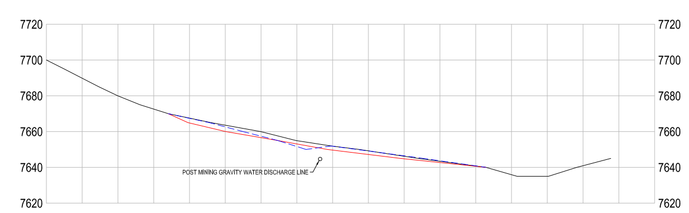


10+00

500-4

CAD FILE NAME/DISK#: 500-4 SHEETS 1-4

NOTES

1. CROSS SECTIONS REFERENCE FROM 500-5
2. REFER TO VOLUME 11 APPENDIX VOLUME ENGINEERING APPENDIX F FOR SLOPE STABILITY ANALYSIS

LEGEND

- PRE-EXISTING LINE
- POST CONSTRUCTION LINE
- FINAL RECLAMATION LINE

| DATE | REVISION | BY | CHK |
|---|---|---|---|
| 12/6/2016 | ADDED POST MINING GRAVITY WATER DISCHARGE LINE | KJL | |
| 2/19/2010 | REVISED TO REFLECT THE AS-BUILT CONDITIONS | KJL | |

PACIFICORP
A MIDAMERICAN ENERGY HOLDINGS COMPANY

DEER CREEK MINE
RILDA CANYON FACILITIES
CROSS SECTIONS

DRAWN BY: K. LARSEN
SCALE: 1"=60'
DATE: MAY 9, 2016
DRAWING #: 500-4
SHEET 2 OF 4
REV. 2

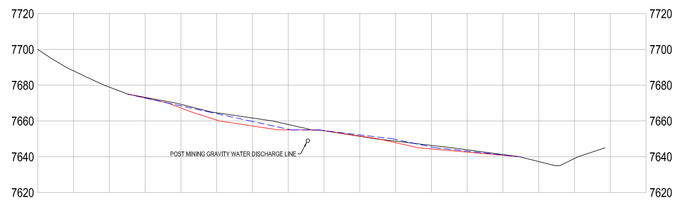


9+50

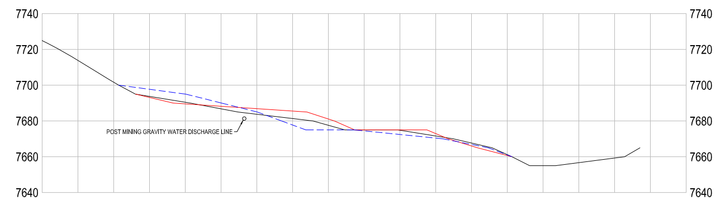


7+00

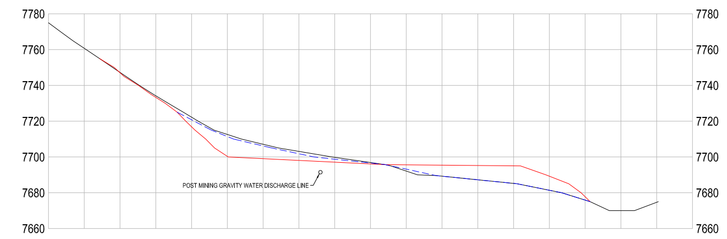


4+50

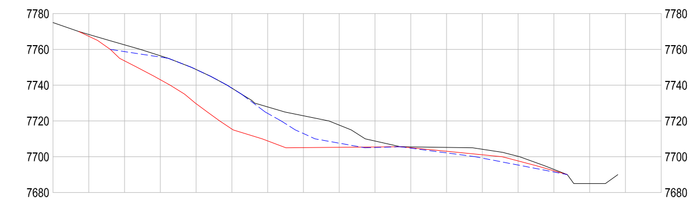

2+00

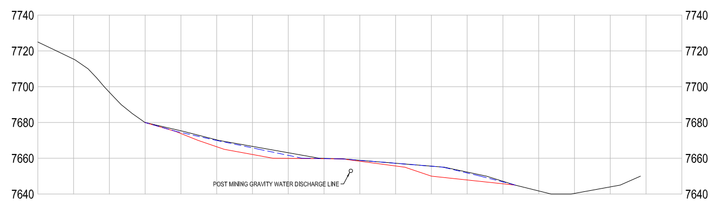


9+00

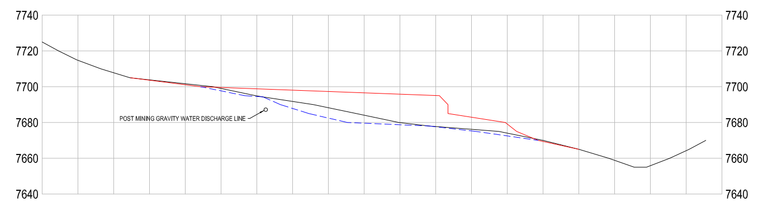


6+50

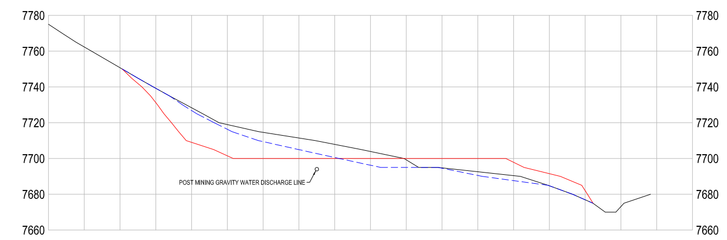


4+00

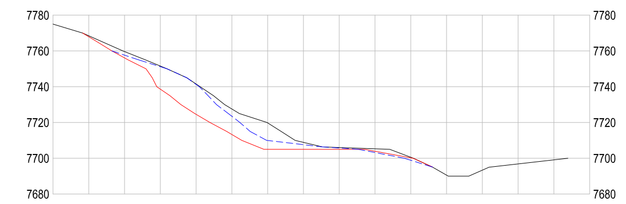

1+50

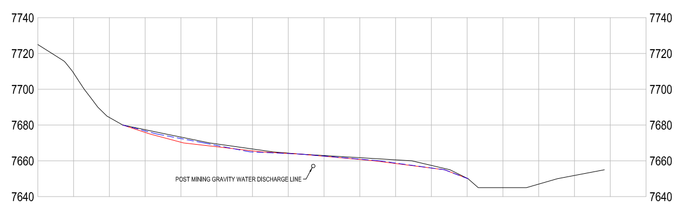


8+50

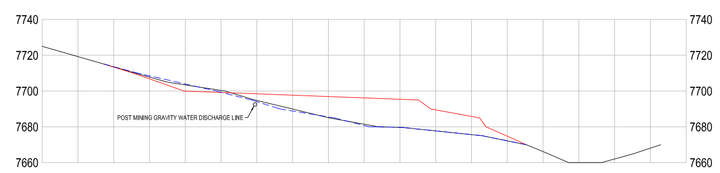


6+00

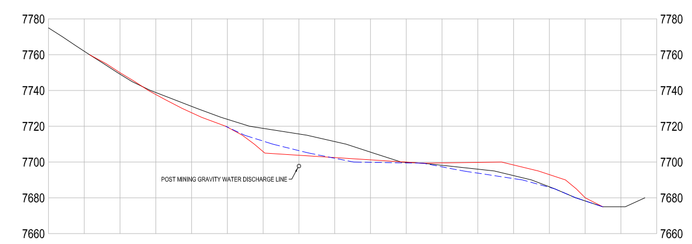


3+50

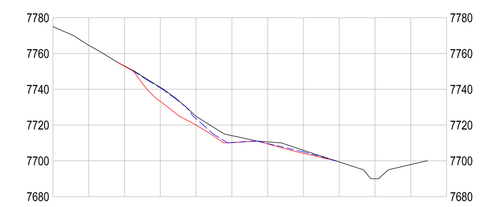

1+00

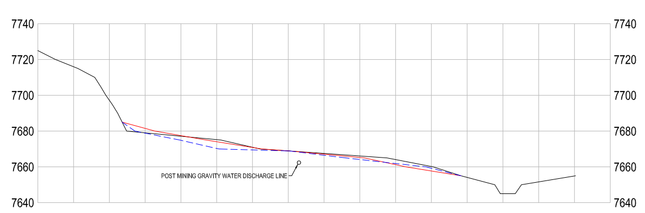


8+00

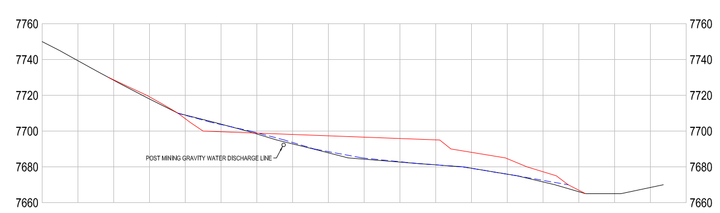


5+50

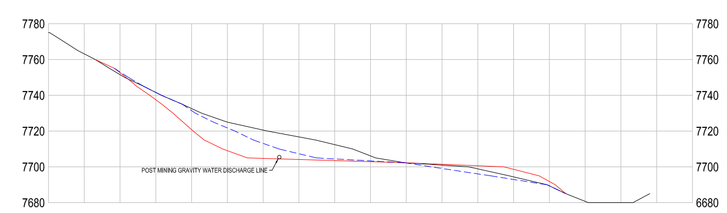


3+00

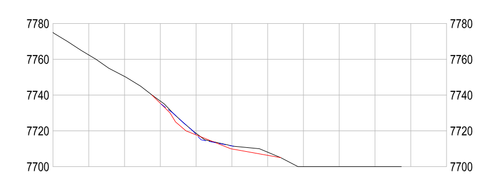

0+50

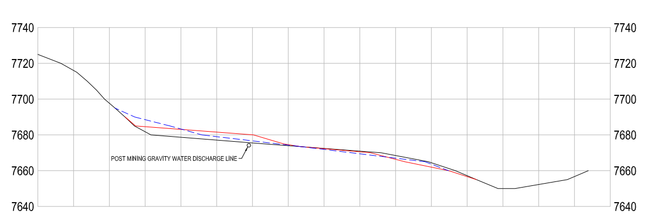


7+50

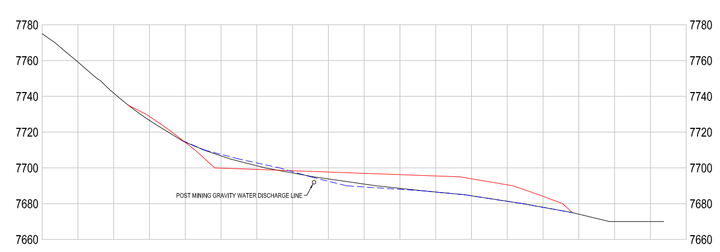


5+00

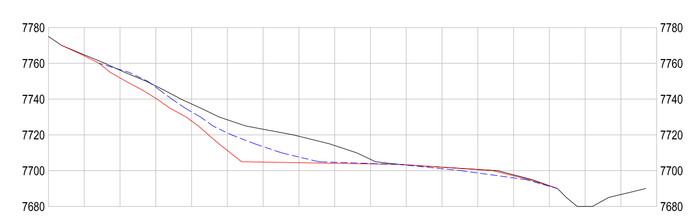

2+50

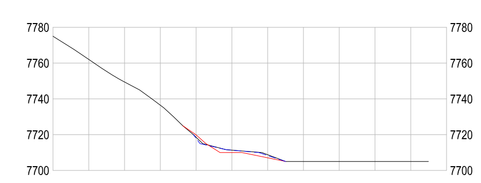

0+00

NOTES

1. CROSS SECTIONS REFERENCE FROM 500-5
2. REFER TO VOLUME 11 APPENDIX VOLUME ENGINEERING APPENDIX F FOR SLOPE STABILITY ANALYSIS

LEGEND

- PRE-EXISTING LINE
- POST CONSTRUCTION LINE
- FINAL RECLAMATION LINE

500-4

CAD FILE NAME/DISK#: 500-4 SHEETS 1-4

PACIFICORP
A MIDAMERICAN ENERGY HOLDINGS COMPANY

DEER CREEK MINE
RILDA CANYON FACILITIES
CROSS SECTIONS

| DATE | REVISION | BY | CHK |
|---|---|---|---|
| 12/6/2016 | ADDED POST MINING GRAVITY WATER DISCHARGE LINE | KJL | |
| 2/19/2010 | REVISED TO REFLECT THE AS-BUILT CONDITIONS | KJL | |

DRAWN BY: K. LARSEN
SCALE: 1"=60'
DATE: MAY 9, 2016
DRAWING #: 500-4
SHEET 1 OF 4
REV. 2

# PacifiCorp

# Deer Creek Mine

# C/015/0018

**Amendment to Add a Post-Mining Water Discharge at Rilda Canyon Portals, Permit Area Change to Include Discharge Pipeline Route and Potential Treatment Facility Area, PacifiCorp, Deer Creek Mine, C/015/0018, Emery County, Utah**

**<u>Volume 11, R645-301-600 Geology, Maps Tab</u>**

**Replace Map 600-1**

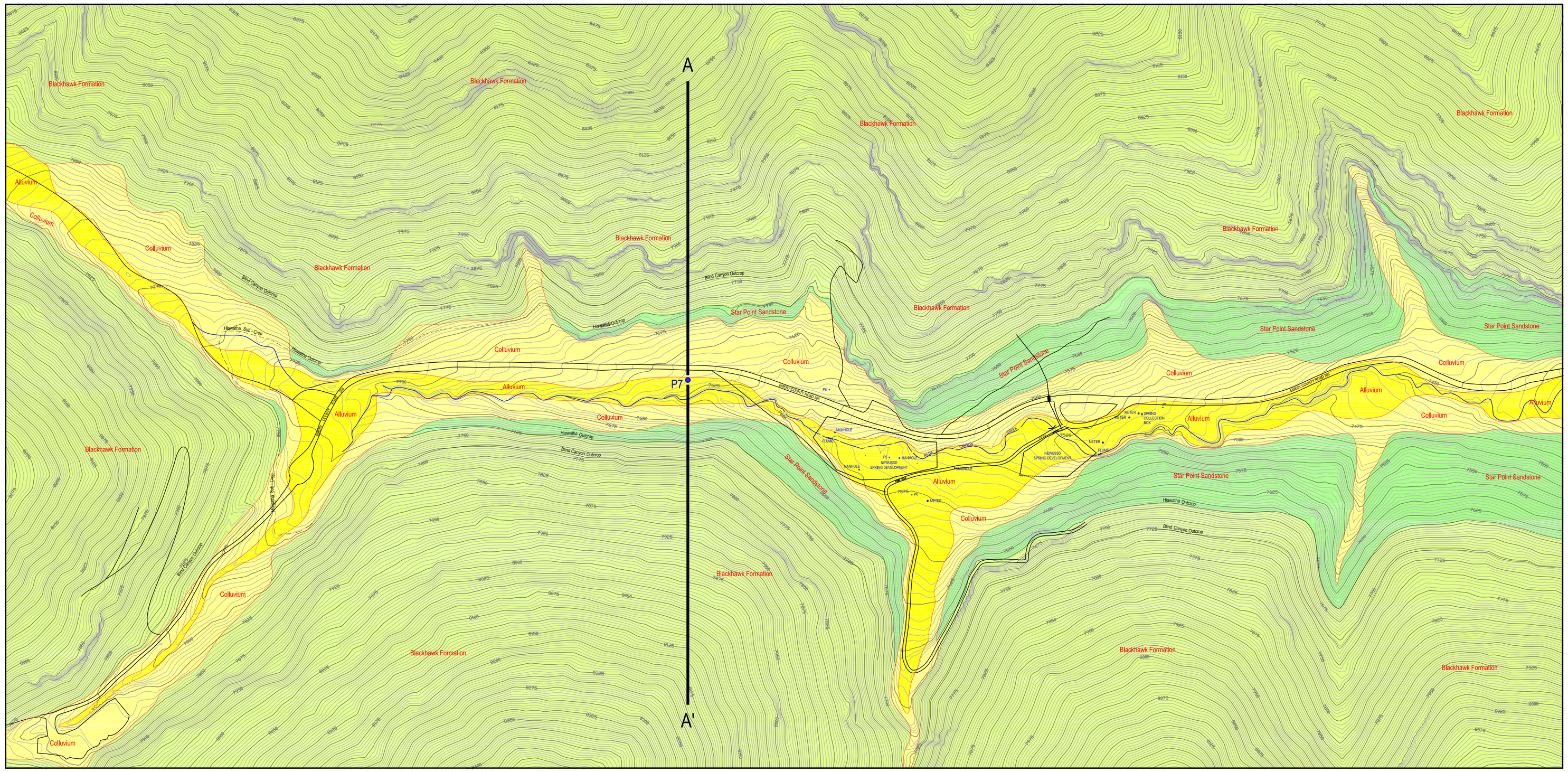


## Plan View Rilda Canyon - Water Well P7

SCALE: 1"=200'

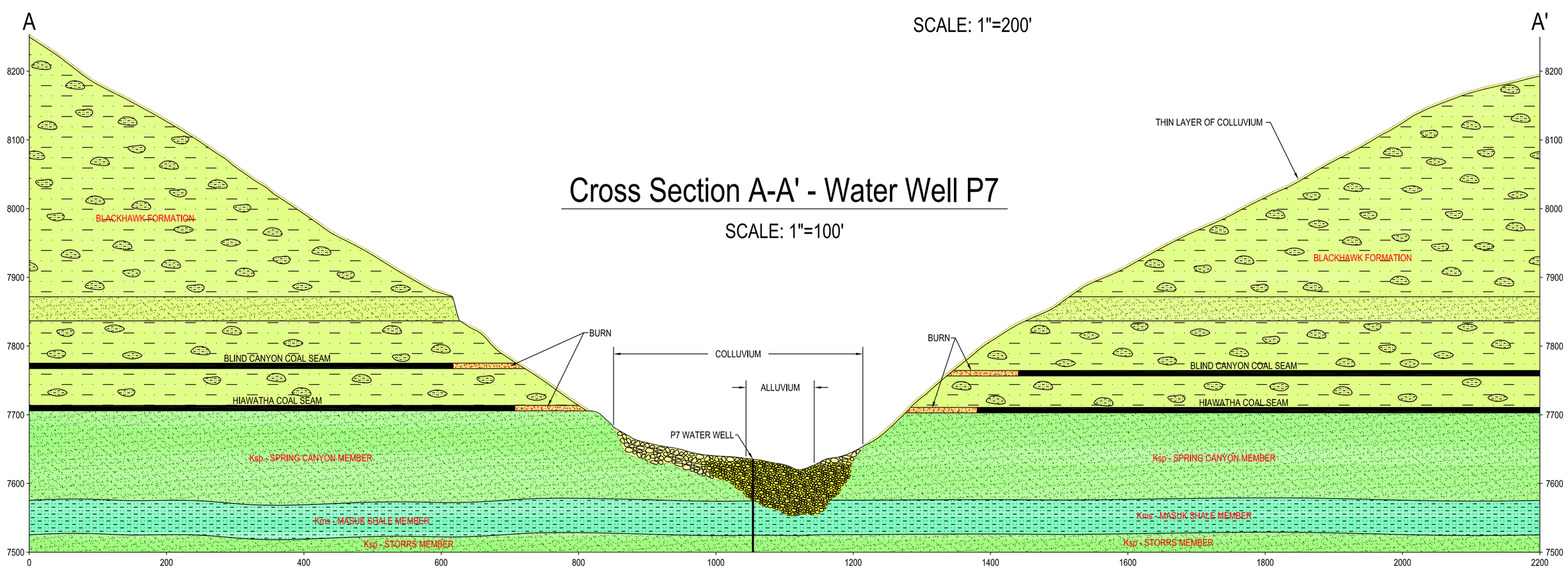


## Cross Section A-A' - Water Well P7

SCALE: 1"=100'

LEGEND

Qc — Quaternary Colluvium Deposits and slopewash material consists of sandy gravel with varying amounts of silt and clay with gravel, including sandstone boulders and blocks of varying thickness, transported by gravity.

Qal — Quaternary Alluvium Deposits material consists of silt, sand, gravel with varying amounts of clay deposited as the result of water transport.

Kbl — Cretaceous Blackhawk Formation consists of alternating mudstones, siltstones, sandstones, and coal. Although coal beds are generally found throughout the Blackhawk Formation, the thickest economically mineable seams are restricted to the lower 150 feet of the formation. The sandstone contained within the Blackhawk Formation is mostly fluvial stream channel deposits and increase in number in the upper portions of the formation. The total thickness of the Blackhawk Formation in the East Mountain area is about 750 feet.

Ksp — Cretaceous Star Point Sandstone usually consists of three prominent massive cliff-forming beach-front sandstones totaling about 400 feet in thickness. These sandstone "tongues" are named from bottom to top: the Panther, The Storrs, and the Spring Canyon. In between the three tongues are beds of Masuk Shale. The intertonguing of the Star Point and Masuk shale represents three transgression/regression episodes along the shoreline of the Cretaceous Interior seaway. The upper contact of the Star Point Sandstone is usually abrupt and readily identifiable on outcrops.

Kms — Cretaceous Mancos Shale: Masuk Shale Member; shale, gray, soft, slope former.

STATE OF UTAH
REGISTERED MEMBER
5224883-2250
KENNETH S. FLECK
LICENSED PROFESSIONAL GEOLOGIST

I, KENNETH S. FLECK LICENSED PROFESSIONAL GEOLOGIST DO HEREBY CERTIFY THAT THE INFORMATION CONTAINED ON THIS DRAWING IS TRUE AND ACCURATE TO THE BEST OF MY KNOWLEDGE AND BELIEF.

Kenneth S. Fleck 5/23/05

KENNETH S. FLECK 5224883-2250 DATE

CAD FILE NAME/DISK#: 600-1

600-1

PACIFICORP
A MIDAMERICAN ENERGY HOLDINGS COMPANY

DEER CREEK MINE
RILDA CANYON: GENERAL GEOLOGY WELL P-7
CROSS SECTION PLAN & PROFILE

| | | | |
|---|---|---|---|
| DRAWN BY: | K. LARSEN | 600-1 | |
| SCALE: | AS NOTED | DRAWING #: | |
| DATE: | JANUARY 11, 2017 | SHEET 1 OF 1 | REV. ___ |

# PacifiCorp

# Deer Creek Mine

# C/015/0018

**Amendment to Add a Post-Mining Water Discharge at Rilda Canyon Portals, Permit Area Change to Include Discharge Pipeline Route and Potential Treatment Facility Area, PacifiCorp, Deer Creek Mine, C/015/0018, Emery County, Utah**

**<u>Volume 11, R645-301-700 Hydrology</u>**

**Replace entire text section**

# R645-301-700 HYDROLOGY SECTION

## TABLE OF CONTENTS

**R645-301-710 INTRODUCTION....4**

*R645-301-711 GENERAL REQUIREMENTS....4*
*R645-301-712 CERTIFICATION....5*
*R645-301-713 INSPECTION....5*

**R645-301-720 ENVIRONMENTAL DESCRIPTION....5**

*R645-301-721 GENERAL REQUIREMENTS....5*
*A. EXISTING GROUNDWATER RESOURCES....5*
*B. EXISTING SURFACE RESOURCES....28*
*R645-301-723 SAMPLING AND ANALYSIS....37*
*R645-301-724 BASELINE INFORMATION....37*
*Groundwater....38*
*Surface Water....38*
*R645-301-724.100 Groundwater Information....39*
*R645-301-724.200 Surface Water Information....39*
*R645-301-724.300 Geologic Information....39*
*R645-301-724.400 Climatological Information....39*
*R645-301-724.600 Survey of Renewable Resources Lands....40*
*R645-301-724.700 Alluvial Valley Floors....40*
*R645-301-725 BASELINE CUMULATIVE IMPACT AREA INFORMATION....40*
*R645-301-728 PROBABLE HYDROLOGIC CONSEQUENCES (PHC) DETERMINATION....40*
*Description of the Mining Operation....41*
*Geology....41*
*Mining Methods....41*
*Surface Water System....41*
*Hydrologic Balance - Surface Water System....42*
*Mitigation and Control Plans....47*
*Surface Monitoring Plan....48*
*Groundwater System....48*
*Hydrologic Balance - Groundwater....49*
*Groundwater Quantity Based on Pump Test Results....53*
*Wellhead/Drinking Water Source Protection....55*
*Spring Impacts....56*
*Mitigation....57*
*Depletion of Storage....63*
*Water Quality....66*
*Post Mining....66*
*R645-301-729 CUMULATIVE HYDROLOGIC IMPACT ASSESSMENT (CHIA)....67*

**R645-301-730 OPERATION PLAN....67**

*R645-301-731 GENERAL REQUIREMENTS....67*
*R645-301-731.100 Hydrologic Balance Protection....67*
*R645-301-731.110 Groundwater Protection....67*
*R645-301-731.120 Surface Water Protection....68*
*R645-301-731.200 Water Monitoring....68*
*Surface Water....69*
*R645-301-731.300 Acid and Toxic-forming Materials....70*
*R645-301-731.400 Transfer of Wells....70*

*R645-301-731.521 Surface Entries and Accesses to Underground Workings* ..... *70*
*R645-301-731.530 State-appropriated Water Supply* ..... *71*
*R645-301-731.600 Stream Buffer Zones* ..... *71*
*R645-301-731.700 Cross Section and Maps* ..... *72*
*R645-301-731.800 Water Rights and Replacement* ..... *72*
*R645-301-732 SEDIMENT CONTROL MEASURES* ..... 73
*R645-301-732.200 Sedimentation Ponds* ..... *73*
*R645-301-732.300 Diversions* ..... *74*
*R645-301-732.400 Road Drainage* ..... *74*
*R645-301-734 DISCHARGE STRUCTURES* ..... 74
*R645-301-735 DISPOSAL OF EXCESS SPOIL* ..... 74
*R645-301-736 COAL MINE WASTE* ..... 74
*R645-301-737 NON-COAL MINE WASTE* ..... 74
*R645-301-738 TEMPORARY CASING AND SEALING OF WELLS* ..... 75

**R645-301-740 DESIGN CRITERIA AND PLANS ..... 75**

*R645-301-741 General Requirements* ..... *75*
*R645-301-742.200 Siltation Structures* ..... *75*
*R645-301-742.220 Sedimentation Pond* ..... *76*
*R645-301-742.230 Other Treatment Facilities* ..... *76*
*R645-301-742.240 Exemptions* ..... *77*
*R645-301-742.300 Diversions* ..... *77*
*R645-301-742.320 Diversion of Perennial and Intermittent Streams* ..... *78*
*R645-301-742.330 Diversion of Miscellaneous Flows* ..... *78*
*R645-301-742.400 Road Drainage* ..... *78*
*R645-301-742.420 Primary Roads* ..... *79*
*R645-301-742.423 Drainage Control* ..... *79*
*R645-301-743 IMPOUNDMENTS* ..... 79
*R645-301-744 DISCHARGE STRUCTURES* ..... 79
*R645-301-746 COAL MINE WASTE* ..... 80
*R645-301-747 DISPOSAL OF NONCOAL MINE WASTE* ..... 80

**R645-301-750 PERFORMANCE STANDARDS ..... 80**

*R645-301-751 WATER QUALITY STANDARDS AND EFFLUENT LIMITATIONS* ..... 80
*R645-301-752 SEDIMENT CONTROL MEASURES* ..... 81
*R645-301-753 IMPOUNDMENTS AND DISCHARGE STRUCTURES* ..... 82
*R645-301-754 DISPOSAL OF EXCESS SPOIL, COAL MINE WASTE AND NON-COAL MINE WASTE* ..... 82
*R645-301-755 CASING AND SEALING OF WELLS* ..... 82

**R645-301-760 RECLAMATION ..... 82**

**LIST OF REFERENCES ..... 83**

**LIST OF MAPS**

**(Refer to Volume 11: Appendix Volume - Hydrology)**

**700-1** **Rilda Canyon Facilities Drainage Area Map**

**700-2** **Rilda Canyon Facilities Mine Site Drainage Map**

**700-3** **Rilda Canyon Facilities Sedimentation Pond**

**700-4** **Rilda Canyon Facilities Reclamation Hydrology Map**

**700-5** **Rilda Canyon Facilities ASCA Location Map**

**LIST OF APPENDICES**
**(Refer to Volume 11: Appendix Volume - Hydrology)**

**Appendix A** **Response of Springs to Longwall Coal Mining at the Deer Creek and Cottonwood Mines, Wasatch Plateau, UT**

**Appendix B** **Drainage and Sediment Control Plan**

**Appendix C** **Rilda Canyon Geomorphology Investigation**

**Appendix D** **Rilda Canyon Spring Relocation Study**

**Note: The Deer Creek Mine ceased production in January 2015. The southern portion of the mine was separated (by the construction of the 3rd North cross-cut 138 seals) from the Mill Fork Area and the portals at the Deer Creek canyon facility and the ventilation portals at the 9th East breakouts were sealed and backfilled in April 2015. The only active portion of the Deer Creek Mine is accessed through the Left Fork portals and Rilda Canyon Portal Facilities. Ventilation and water pumping activities are the only operations occurring in the North Rilda and Mill Fork areas of the underground mine. The 1st Right Fan was taken off-line in March 2015. The Left Fork fan is the only operating fan for the Deer Creek Mine. All information pertaining to the operations of the mine, coal recovery, mining methods, and subsidence control have been retained for a historic reference.**

# R645-301-710 INTRODUCTION

This application provides a detailed description of the hydrology, including groundwater and surface water quality and quantity, of the land within the permit and surrounding adjacent area (refer to Introduction: Figure 1, 2, and 3 of this Volume).

Since 1989 detailed data on the hydrology of the land within the permit and surrounding adjacent area have been collected, compiled and analyzed by PacifiCorp and several governmental agencies. Information collected by PacifiCorp is the result of exploratory drilling, field investigations, geologic mapping, aerial photography, spring surveys, groundwater tests, monitoring of numerous wells and stream stations, climatological monitoring, and investigations by independent consultants. The data collection program is part of a complete Hydrologic Monitoring Program which has been approved by the State of Utah, Division of Oil, Gas and Mining (DOGM) and the Office of Surface Mining (OSM). All data collected have been and will continue to be submitted to OSM, DOGM, United States Forest Service (USFS), and the Bureau of Land Management (BLM) each year in the annual Hydrologic Monitoring reports.

PacifiCorp has a policy of close cooperation with many agencies and has invited, encouraged, and permitted numerous agencies to conduct investigations and experiments within the permit and adjacent areas. The resulting information produced by these investigations is quite extensive and has been utilized throughout this application.

## *R645-301-711 General Requirements*

711.100 Existing hydrologic resources as given under R645-301-720
711.200 Proposed operations and potential impacts to the hydrologic balance as given under R645-301-730
711.300 The methods and calculations utilized to achieve compliance with hydrologic design criteria and plans given under R645-301-740
711.400 Applicable hydrologic performance standards as given under R645-301-750

711.500 Reclamation activities as given under R645-301-750

### *R645-301-712 Certification*

All cross sections, maps, and plans required by R645-301-722 as appropriate and R645-301-731.700 will be prepared and certified according to R645-301-512.

### *R645-301-713 Inspection*

Impoundments associated with the current Deer Creek Mine facilities including the Rilda Canyon Portal Facilities will be inspected as described under R645-301-514.300 of the Utah Coal Rules.

## R645-301-720 ENVIRONMENTAL DESCRIPTION

### *R645-301-721 General Requirements*

The existing pre-mining hydrologic resource of the East Mountain property is subdivided into the following sections:

**A. EXISTING GROUNDWATER RESOURCES**

1. Permit Area and Adjacent Area Groundwater Hydrology
2. Permit and Adjacent Area Geology
3. Permit and Adjacent Area Groundwater Characteristics
4. Springs and Seeps
5. Groundwater Quality
6. Mine Dewatering
7. Groundwater Rights and Users
8. North Emery Water Users Special Service District (NEWUSSD) Rilda Canyon Springs

**B. EXISTING SURFACE RESOURCES**

1. Permit and Adjacent Area Surface Water Hydrology
2. Surface Water Quality
3. Soil Loss and Sediment Yield

**A. EXISTING GROUNDWATER RESOURCES**

1. PERMIT AND ADJACENT AREA GROUNDWATER HYDROLOGY

The characteristics and usefulness of a groundwater resource are dependent upon the geology of the water-bearing strata and on the geology and hydrology

of the recharge area. Groundwater movement and storage characteristics are dependent on the characteristics of the substratum. To facilitate an understanding of groundwater of the East Mountain property including the North Rilda Area, a discussion of pertinent regional geologic features is presented below.

2. PERMIT AND ADJACENT AREA GEOLOGY

The East Mountain property is located in the central portion of the Wasatch Plateau Coal Field in Emery County, Utah. Generally, this area is a flat-topped mesa surrounded by heavily vegetated slopes which extend to precipitous cliffs dropping steeply to the valley below. Relief of up to 2,500 feet is measured from the Castle Valley lowland to the plateau above. The following discussion summarizes the structural geology and stratigraphy of the permit and adjacent areas located within the East Mountain property.

Strata in the East Mountain permit and adjacent areas are gently down-folded in the area of the Straight Canyon Syncline which is present in the central portion of the East Mountain (see Volume 8 - Geologic Section of the Deer Creek MRP). The bearing of the Straight Canyon Syncline is approximately N30$^{O}$E and the structure plunges to the southwest. Dips in the syncline range from two to six degrees with the north limb dipping the steepest.

In the area south of the Straight Canyon Syncline the coal seam dips gently in a northwest direction toward the syncline; however, to the northwest of the Straight Canyon Syncline both the Hiawatha and Blind Canyon seams dip in a southeast direction at three to five degrees.

The strata within the property have been offset by a series of north-south trending normal fault zones. Generally, the faults are nearly vertical and do not have significant amounts of fault gouge or drag associated with them. One of the major faults present in the region, the Pleasant Valley Fault, has been intersected in both the Deer Creek and Cottonwood/Wilberg mines.

The Pleasant Valley Fault consists of two parallel faults about 150 feet apart. The fault's total displacement (where it was intersected in the Deer Creek Mine) to the north is 150 feet with its down thrown side on the east. The displacement diminishes to less than one foot where it was intersected in the Wilberg Mine near the south end of the property.

Another north-south trending fault, the Deer Creek Fault, is present to the east of the Pleasant Valley Fault. It limits the eastward development of the Wilberg/Cottonwood and Deer Creek mines. The displacement of the Deer Creek Fault ranges from 100 to 170 feet with the east block being down thrown.

A northeast-southwest trending fault system, the Roans Canyon Graben, is present along the axis of the Straight Canyon Syncline. The system contains up to six normal faults having displacements ranging from a few feet to over 150 feet. Coal deposits present to the north of the fault have been accessed through rock tunnels driven from the 3rd North section of the Deer Creek Mine.

The rock formations exposed in the East Mountain area range from Upper Cretaceous to Tertiary in age (see Volume 8 - Geologic Section of the Deer Creek MRP). The formations, in ascending order, are the Masuk Shale member of the Mancos Shale, Star Point Sandstone, Blackhawk, Castlegate Sandstone, Upper Price River, North Horn, and Flagstaff Limestone. The coal deposits are restricted to the lower portion of the Blackhawk Formation.

The Masuk Shale is the upper member of the Mancos Shale and consists of light to medium gray marine mudstones. Usually this formation weathers readily, forming slopes which are often covered by debris. It is generally devoid of water.

Overlying and intertonguing with the Masuk Shale is the Star Point Sandstone. In the East Mountain area the Star Point Sandstone consists of three or more massive cliff-forming sandstones totaling about 400 feet in thickness. Generally, the sandstones are fine to medium-grained and moderately well-sorted. The upper contact of the Star Point Sandstone is usually quite abrupt and readily identifiable on the outcrop. Even though the Star Point Sandstone formation exists throughout the entire East Mountain property, the low permeability and lack of recharge (i.e., very little outcrop exposure and limited vertical groundwater migration caused by the mudstone layers of the North Horn and Blackhawk formations) limit its usefulness as a water producing aquifer. Locally, the Star Point Sandstone exhibits aquifer characteristics. These are isolated occurrences where regional faults have created secondary permeability and have been intersected by major canyons with perennial streams. An example is Little Bear spring located in Huntington Canyon.

The Blackhawk Formation consists of alternating mudstones, siltstones, sandstones, and coal. Although coal is generally found throughout the Blackhawk Formation, the economic seams are restricted to the lower 150 feet of the formation. The sandstones contained within the Blackhawk Formation are fluvial and increase in number in the upper portions of the formation. Many of the tabular sandstone channels form local perched water tables. The total thickness of the Blackhawk Formation in the East Mountain area is about 750 feet.

The Castlegate Sandstone, the lower member of the Price River Formation, generally caps the escarpment which surrounds the eastern limit of the property. The Castlegate Sandstone consists of about 250 feet of coarse-grained, light gray, fluvial sandstones; pebble conglomerates; and subordinate zones of mudstones.

The Upper Price River Formation, which overlies the Castlegate Sandstone member, is about 350 feet thick and forms slopes which extend upward from the Castlegate escarpment. Although some mudstones are present, fine-grained, poorly sorted sandstones dominate the Upper Price River Formation.

The North Horn Formation is the youngest formation exposed in the North Rilda Area and is about 200 to 250 feet thick. Mudstones dominate the rock types present and are generally gray to light brown in color. Localized, lenticular sandstone channels are present throughout the formation. The sandstone beds are more common near the upper and lower contacts of the formation.

The Flagstaff Limestone Formation overlies the North Horn Formation and consists of white to light gray lacustrine limestone. An erosional remnant of 100 to 150 feet of this formation remains, forming a cap on the highest plateaus to the west and south of the North Rilda Area.

3. PERMIT AND ADJACENT AREA GROUNDWATER CHARACTERISTICS

Waters entering the groundwater system are mostly from snow melt. The amount of water which enters the groundwater system is highly variable from one site to another. The low surface relief on the top of East Mountain to the south of the North Rilda Area encourages the infiltration of melting snow. Conversely, in the North Rilda Area where steep slopes are common, infiltration is limited. All of the geologic formations which are exposed in the area have relatively low permeability which further reduces the amount of water entering the groundwater system. Probably less than five percent of the annual precipitation recharges the groundwater supply (Price and Arnow, 1974; U. S. Geological Survey, 1979).

Geology controls the movement of groundwater. Because of the low permeability of the consolidated sedimentary rocks in the East Mountain area, groundwater movement is primarily "through fractures, through openings between beds, and, in the case of the Flagstaff Limestone, through solution openings" (Danielson et al., 1981, p. 25).

The majority of the groundwater which infiltrates the Flagstaff Limestone flows down vertical fractures which intersect sandstone channel systems in the North Horn Formation. The majority of the groundwater reaching this point intersects the surface in springs located in the North Horn Formation. Very little recharge intersects the upper Price River Formation and Castlegate Sandstones; consequently, they are not water saturated where intersected in the numerous drill holes penetrating those units. Due to the topographic configuration of the North Rilda Area, recharge is limited and only two springs and two seeps were located during spring and seep surveys. Data have been collected from numerous coal exploration drill holes, from within the mine workings, from surface drainages, and from the springs in the area. The data have identified two separate isolated aquifer systems on the East Mountain property; the first is localized perched water zones in the North Horn Formation, and the second is a combination of localized perched water tables in the Blackhawk Formation and the Star Point Sandstone which exhibits some limited potential as a regional aquifer. Stratigraphy is the main controlling factor restricting groundwater movement and development of regional and perched aquifer systems within the East Mountain property. A complete description of the various formations and how they influence the groundwater systems is located in Volume 9 - Hydrologic Section: *Regional Groundwater Characteristics*. A secondary factor controlling existence and movement of groundwater in North Rilda Area is topographic configuration (incised canyons) of the area. To document the geologic and hydrologic characteristics of the North Rilda Area, a total of twenty three surface exploration holes have been completed, including a series of holes in the Right Fork of Rilda Canyon in the area of the proposed mainline development crossing of the Right Fork. Due to the limited surface area for infiltration, topographic configuration of the area (incised canyons), and outcropping of the Star Point Sandstone Formation around the entire North Rilda Ridge, the Star Point appears to be unsaturated within the North Rilda Area. The following table documents the holes completed, total depth, amount of non-sandstone lithology directly below the Hiawatha seam, amount of Star Point Sandstone penetrated and the hydrologic data.

NORTH RILDA SURFACE EXPLORATION DATA

| Drill Hole # | Total Depth (feet) | Total Depth (below base of Hiawatha Seam) (feet) | Non-Sandstone Lithology Below Hiawatha Seam (feet) | Star Point Sandstone Penetrated (feet) | Hydrologic Data |
|---|---|---|---|---|---|
| EM-47 | 300 | 114.9 | 4.9 | 119.8 | Est. @ 5 GPM from the Colluvial/Alluvial deposits |
| EM-48 | 1860 | 160.0 | | 160 | No Measureable Quantities |
| EM-49 | 1680 | 102.4 | | 102.4 | No Measureable Quantities |
| EM-50 | 1680 | 81.6 | 6.6 | 88.2 | No Measureable Quantities |
| EM-51 | 1660 | 83.4 | 1.4 | 84.8 | No Measureable Quantities |
| EM-52 | 1560 | 68.1 | 2.1 | 70.2 | No Measureable Quantities |
| EM-53 | 716 | 7.7 | | 7.7 | Dry |
| EM-55 | 1680 | 63.9 | 2.9 | 66.8 | No Measureable Quantities |
| EM-56C | 422 | 29.9 | 26.4 | 29.9 | Est. @ 15 GPM from the Colluvial/Alluvial deposits |
| EM-105 | 1620 | 84.9 | 0.9 | 85.8 | No Measureable Quantities |
| EM-107 | 767 | 8.5 | | 8.5 | Dry |
| EM-153 | 796 | 12.1 | 1.0 | 13.1 | Dry |
| EM-154 | 795 | 15.6 | 1.1 | 16.7 | Dry |
| EM-155 | 716 | 14.5 | | 14.5 | Dry |
| EM-156 | 755 | 13.1 | | 13.1 | Dry |
| EM-157 | 436 | 17.0 | 4.6 | 21.6 | Dry |
| EM-158 | 226 | 13.8 | 9.2 | 23.0 | Est. @ 5 GPM from the Colluvial/Alluvial deposits |
| EM-159 | 227 | | | | Est. @ 5 GPM from the Colluvial/Alluvial deposits |
| EM-160 | 257 | 5.7 | 1.1 | 4.6 | Est. @ 5 GPM from the Colluvial/Alluvial deposits |
| EM-161 | 287 | 6.4 | | 6.4 | Est. @ 2 GPM from the Colluvial/Alluvial deposits |
| EM-162 | 307 | 7.6 | 0.6 | 7.0 | Est. @ 2 GPM from the Colluvial/Alluvial deposits |
| EM-163 | 327 | 9.6 | 3.4 | 6.2 | Est. @ 2 GPM from the Colluvial/Alluvial deposits |
| EM-164 | 366 | 17.1 | 1.2 | 15.9 | Est. @ 2 GPM from the Colluvial/Alluvial deposits |

## Structural Hydrologic Features

Structural features, such as the Roans Canyon Fault Graben, the Straight Canyon Syncline, and the Deer Creek Fault, had an influence on the hydrologic regime south of the North Rilda Area within the East Mountain adjacent area (detailed in Volume 9 - Hydrologic Section). Geology of the North Rilda Area is less complex than that of the central portion of the East Mountain property (see Volume 8 - Geology Section). A fault system referred to as the Mill Fork Canyon Graben is projected to intersect the western portion of Federal Coal Lease U-06039 (refer to Volume 9 map HM-9). The Mill Fork Canyon Graben was intersected and crossed to the north of the North Rilda Area mine extension in the Beaver Creek No. 4 Mine and consisted of series of faults with a total

displacement of approximately thirty (30) feet. Beaver Creek No. 4 Mine was a relatively dry mine with only few isolated roof drippers associated with the Mill Fork Fault system. PacifiCorp has conducted extensive exploration programs to delineate the Mill Fork Graben including a series of close spaced drill holes in the Right Fork of Rilda Canyon. Drilling was conducted on approximately 250 foot centers across the projected Mill Fork Graben from previously completed drill holes EM-158 and EM-56. No structural discontinuities were identified during drilling. Groundwater encountered during drilling was restricted to minor quantities from the alluvium/colluvial fill (estimated at 2 - 5 GPM) near the alluvial/bedrock interface. Based on the results of the 1997 surface exploration conducted in the Right Fork of Rilda Canyon, a meeting was held in October 1997 with DOGM, USFS, and BLM to discuss the re-location of the 4/5$^{th}$ North intersection to maximize the overburden in the Right Fork stream crossing. The 5$^{th}$ North Mains were re-located approximately 800 feet west of the original projection, increasing the overburden from 120 to approximately 200 feet. In reviewing the exploration data and in-mine information from the development of the 5$^{th}$ North Mains, it appears that the eastern fault of the Mill Fork Graben diminishes to the south from where it was intercepted in the Beaver Creek No. 4 Mine located north of Mill Fork Canyon (refer to Volume 9 map HM-9). Deer Creek mine workings have intercepted a small fault of 7' displacement, down on the west side in the Mill Fork Access mains at XC-29, followed by a very small displacement (<1') fault, upthrown on the west side. This small fault “graben,” though not in line with the projected fault zone, is almost surely related to it. This fault zone does not appear in any surface outcrops. No groundwater was associated with either fault. If mining intersects faulting related to the Mill Fork Graben during development, permanent seals will be installed to control groundwater if present.

Alluvial Aquifers

Utah regulations require that the presence of alluvial valley floors in or adjacent to the mine project area be identified. The regulations define an alluvial valley floor as "unconsolidated stream-laid deposits holding streams with water availability sufficient for sub-irrigation or flood irrigation agricultural activities but does not include upland areas which are generally overlain by a thin veneer of colluvial deposits composed chiefly of debris from sheet erosion, deposits formed by unconcentrated runoff or slope wash together with talus, or other mass-movement accumulations, and wind blown deposits". The drainage systems of the North Rilda Areas are examples of colluvial deposits, consisting of alluvium in part and containing angular rock fragments, talus, cliff debris, and material from avalanches. Even though these deposits are defined as colluvial/alluvial, mining below the stream segments in the North Rilda Area will be restricted to first mining only (refer to Volume 9 maps HM-9, HM-10,

and Engineering Section, R645-301-500, of this document for mine plan layouts and subsidence impacts). Alluvial deposits in and adjacent to the North Rilda permit area have been mapped and reported in Doelling's "Wasatch Plateau Coal Fields" (1972). The report indicated that alluvia in the area are found solely along Huntington Creek below the Rilda Canyon confluence in the Huntington drainage system. A complete description of the alluvial aquifers is outlined in Volume 9 - Hydrologic Section. Additional studies conducted by PacifiCorp documented the characteristics of colluvial/alluvial deposits in Rilda Canyon within the proposed disturbed area (refer to geotechnical study, Volume 11 Appendix Volume - Engineering: Appendix F.

4. SPRINGS AND SEEPS

The 1979 water reconnaissance program of East Mountain Springs was initiated with an aerial survey of East Mountain properties via helicopter. During the survey, the locations of 102 possible springs were plotted on aerial photographs. Subsequent field work confirmed the locations of forty-eight (48) springs producing measurable amounts of water. The remaining sightings proved to be minor seeps, dry or runoff from other springs. Between 1979, the time PacifiCorp began monitoring springs on East Mountain, and 1991, additional field reconnaissance projects increased the number of springs from less than fifty (50) to nearly eighty (80). Each spring site on East Mountain has been studied to determine the geologic circumstances that cause the springs to occur. The mode of occurrence for each spring has been tabulated on the "Springs Geologic Conditions Inventory" sheets located in the annual Hydrologic Monitoring reports (refer to Volume 9 - Hydrologic Support Information). The springs on East Mountain originate in several different ways (see Volume 9 - Hydrologic Section or Annual Hydrologic Monitoring Reports); however, many springs share the same mode of occurrence and, in some cases, are related.

The most frequent occurrences of springs are those located about 150 to 350 feet below the top of the North Horn Formation (see Volume 9 - Hydrologic Section: Figure HF-6). The drill hole data show a predominance of fluvial siltstone and sandstone at that stratigraphic interval. These sedimentary rocks represent many isolated fluvial systems which are water-bearing. The springs are formed where the fluvial channels intersect the land surface. Because the fluvial channels within this zone are generally not interconnected, the springs are not interrelated but share the same mode of occurrence.

Numerous springs located in the lower portion of the North Horn Formation occur when water flowing through fluvial sandstones, which are underlain by a thin zone of impervious mudstone at the base of the North Horn Formation, intersect the land surface. The surface drill hole data indicate that impervious

mudstone units occur at the upper and lower portion of the North Horn Formation. Even though these individual mudstone layers are discontinuous, the occurrence of this type of strata exists throughout the East Mountain Property. As part of Volume 9 - Hydrologic Support Information, logs of representative holes from the East Mountain exploration programs are included to document the occurrence of this type of strata (additional drill hole data are located at PacifiCorp's Salt Lake or Huntington offices). The springs related to this mode of occurrence are not generally interrelated because they are fed by waters flowing through isolated fluvial channel sandstones and siltstones.

Several springs are located along the Roans Canyon Fault Graben. Generally, the springs are located within the North Horn Formation along the fault zone. Few springs are located in the area below the base of the North Horn Formation below where the impervious mudstone is located; supporting the fact that water percolating down a fracture or fault is stopped from further downward travel when it reaches the impervious clay zone which forms a seal along the fracture. Many of the largest springs on East Mountain are located along this fault system. Because the fault system is located along the trough of the Straight Canyon Syncline, water from both the north and the south flows toward the fault where it is allowed to migrate to the land surface. The springs located along this fault zone are generally interrelated.

A few springs are located within both the Flagstaff and Price River formations; however, their occurrence is insignificant in comparison to springs located in the North Horn Formation.Generally springs with discharges exceeding 50 gpm are associated with faulting where permeability has been increased by fracturing. The discharge of the springs varies directly with the amount of precipitation and also varies seasonally. Discharge is greatest during the snow melt period, normally from late April through the month of June. Following periods of groundwater recharge the discharge recedes fairly rapidly at first, then gradually, indicating a double porosity effect. At the end of the water year the remaining discharge is only twenty to thirty percent (20-30%) of the peak discharge. Annual variations and historical comparisons are depicted in the annual Hydrologic Monitoring reports. During reconnaissance surveys of the North Rilda Area, only two springs were located within the extended mining area, spring 80-50 in Section 29 and the Rilda Canyon Springs located in Section 28. In addition to the springs, two minor seeps were located within the extended mining area, one along the trace of the Mill Fork Canyon fault, and the second seep is located at the formational contact between the Blackhawk/Star Point Sandstone (refer to Volume 9 - Hydrologic Section).

5. GROUNDWATER QUALITY

Groundwater chemical quality is very good in strata above the Mancos Shale. The USGS reports a range in dissolved solids from 50 to 750 mg/l for samples from 140 springs in the region issuing from the Star Point Sandstone and overlying formations (Danielson et al., 1981). Danielson et al. (1981) identified the regional trends of decreasing water quality from north to south and west to east across the Wasatch Plateau. Waters percolating through the underlying Mancos Shale quickly deteriorate, with total dissolved solids concentrations frequently exceeding 3000 mg/l.

Additional studies by PacifiCorp have confirmed the primary findings of the USGS concerning regional trends in quality. Originally, decreasing quality from north to south was believed to depict the groundwater flow direction, and the quality decreased as a function of the time it traveled through the strata. The time travel component is probably an important factor. In 1985 a surface exploration program identified the existence of an area of residual heat from an ancient burn on the outcrop throughout the southern portion of East Mountain. The high temperature was also explored within the mine and a portion of reserves were lost because of the situation. It is now theorized that the high temperature water dissolved the mineral constituents of the formations, thereby altering the water chemistry. The quality also decreases vertically because of the influence of marine sediments along with the trend of decreasing quality from north to south.

An examination of Figure HF-7 (refer to Volume 9 - Hydrologic Section of the Deer Creek Mine MRP) indicates that a relationship exists between elevation and the total dissolved solids concentration of the springs and the surface streams. A distinct relationship exists with respect to surface and water emanating from the springs. The data indicate that concentrations of dissolved materials increase with diminishing elevation for both surface streams and springs. The change in quality is a function of the differences in the chemical character of geologic formations which outcrop at different elevations (see Table HT-2 for East Mountain springs water quality, refer to Volume 9 - Hydrologic Section of the Deer Creek Mine MRP).

To more closely identify springs which are related, water samples are analyzed to determine the percentage of cations and anions in solution. These percentages have been graphically represented as cation-anion diagrams in the annual Hydrologic Monitoring reports. The purpose of the diagrams is to identify groups of related springs by water chemistry. The diagrams clearly show the similarity of water quality of springs originating in the same geologic formation. To better visualize this concept, the cation-anion diagrams are presented by the geologic formation in which they originate. A general pattern for the Flagstaff Limestone and Price River formations can be recognized for each year in which the cation/anions were analyzed. A consistent pattern for

the North Horn Formation is less obvious due to the complex geology of the formation itself. One aspect the cation-anion diagrams demonstrate is that, even though the quality varies slightly from individual sites as well as from different formations, seasonal variations do not exist.

PacifiCorp began in-mine water quality monitoring in 1977 with the collection of numerous samples throughout the extent of the mine workings. The quality has remained relatively constant (refer to Volume 9 - Hydrologic Section of the Deer Creek Mine MRP, Maps HM-2 and HM-3). As with the springs, quality varies from individual sites, but quality from the individual sites remains constant versus time (refer to Volume 9 - Hydrologic Section of the Deer Creek Mine MRP Figure HF-8). The overall quality collected from each mine is shown in Volume 9 - Hydrologic Section of the Deer Creek Mine MRP Table HT-3.

The predominant dissolved chemical constituents of the groundwater from both surface springs and samples collected in the mine are calcium, bicarbonate, magnesium, and sulfate. Concentrations of magnesium are normally about one-half the concentration of calcium. Sulfate concentrations are typically higher in water from springs issuing from the Starpoint-Blackhawk aquifer zone or confined aquifers intersected by mine workings. As mentioned early, water quality degrades from the north to the south and also vertically.

6. MINE DEWATERING

Water encountered within the Deer Creek mine has generally been confined to the perched aquifer systems and fractures and faults associated with the Blackhawk Formation. Water enters the mines through various avenues including roof drippers from overlying fluvial sandstone channels, bolt holes, tension cracks in the overlying strata, longwall caved areas, and where fractures or faults have been intersected by the mine workings. The lower Blackhawk/Star Point Sandstone Formation appears to be unsaturated within the North Rilda Area. This is due to the limited surface area for infiltration, topographic configuration of the area (incised canyons), and outcropping of the Blackhawk and Star Point Sandstone formations around the entire North Rilda Ridge. Based on extensive surface exploration data, (refer to PERMIT ADJACENT AREA GROUNDWATER CHARACTERISTICS), intercepted groundwater in the North Rilda ridge will be limited primarily to perched aquifers in the lower Blackhawk Formation. Mountain Coal's No. 4 Mine located to the north of the North Rilda Area with a similar topographic location intercepted only minor quantities of groundwater and discharge from the mine was not required. Excess water intercepted in the mine ~~will be~~ was pumped to storage areas or discharged from the mine under approved UPDES permits

(refer to Volume 9 - Hydrologic Section: Appendix B for UPDES permit information). A complete description of the quality and quantity is reported in the Annual Hydrologic Monitoring reports and also in the PHC (Section 728).

7. GROUNDWATER RIGHTS AND USERS

Nine springs have been developed in Huntington Canyon or its tributaries to provide for domestic, industrial, and commercial water needs. Currently, Huntington City utilizes two springs in Huntington Canyon, Big Bear Canyon Springs and Little Bear Canyon Springs. The North Emery Water Users Special Service District (NEWUSSD) also utilizes springs in Huntington Canyon to provide for domestic and industrial water needs in areas outside of Huntington City. Along with springs in Huntington Canyon, NEWUSSD is currently utilizing water from three springs in Rilda Canyon (refer to map HM-1, HM-5 and HM-8 Volume 9 - Hydrologic Section of the Deer Creek MRP).

8. NORTH EMERY WATER USERS SPECIAL SERVICE DISTRICT (NEWUSSD)

Of concern to PacifiCorp-Fuel Resources is the proximity of mining activities in Rilda Canyon to the Rilda Canyon Springs which currently serve as a culinary water source to the North Emery Water Users Special Service District (NEWUSSD) serving some 410 connections. Due to the importance of these springs, a separate discussion is provided herein describing the nature of NEWUSSD's Rilda Canyon Springs and the sources of the waters issuing from them. The structural geologic setting is described, followed by an analysis of spring flow quality and quantity.

Although no significant north-south trending faults are known to exist in the area of the Rilda Canyon springs, other physical features in the area indicate that the major springs issuing from the Star Point Sandstone in the Huntington Canyon, and Little Bear Canyon are fault or fracture related (refer to Map HM-6 [Volume 9 - Hydrologic Section of the Deer Creek MRP] for spring locations). A noteworthy feature related to the occurrence of the principal Starpoint springs is the location of each spring with regard to a known fault or the location with regard to the linear orientation of significant north-south trending side drainage channels. As illustrated on Map HM-6, Little Bear Spring is directly in line with the western edge of the graben identified in Beaver Creek Coal Company's No. 4 Mine. The Rilda Canyon Springs lie directly in line with a north-south trending side canyon to the south as well as one to the north. From examination of topographic features of the area under a stereoscope, it appears that the linear relationship of side drainage channels (or lineament) can be traced through Mill Fork Canyon to the north, intersecting the northeast-southwest trending graben

(encountered by Beaver Creek Coal) near the northern ridge of Mill Fork Canyon. Two separate geophysical techniques were employed in Rilda Canyon to assist interpreting the occurrence and movement of groundwater. First, Very Low Frequency Electromagnetic Analysis (VLFEM) and second, resistivity and induced polarization were utilized to verify the existence of fracture zones in line with the lineament traced from Rilda into Mill Fork Canyon.

The VLFEM study consisted of two transects in an east-west direction across the Rilda Canyon Spring area, one along the road that bypasses the springs to the north and one along the road bypassing the springs to the south. Data from the east-west transect are shown on Figure HF-9B (refer to Volume 9 - Hydrologic Section of the Deer Creek MRP). In both transects, a significant subsurface anomalous condition was encountered in the vicinity of the springs and directly in line with the north and south canyons. In addition to the east-west transect, three north-south transects were conducted in order to delineate possible fracture zones parallel to the stream. Data from the north-south transect are illustrated in figures HF-9D through 9E (refer to Volume 9 - Hydrologic Section of the Deer Creek MRP) and location of the transect are shown on Figure HF-9F (refer to Volume 9 - Hydrologic Section of the Deer Creek MRP). Analysis of the north-south transect shows an anomalous area, which might indicate the existence of a fault or fracture in the westernmost transect as shown on Figure HF-9C (refer to Volume 9 - Hydrologic Section of the Deer Creek MRP). This anomalous area was also evident on the resistivity-IP survey which will be discussed below. The two transects which were conducted lower in the canyon do not show strong evidence of any anomalous areas [see figures HF-9D and 9E (refer to Volume 9 - Hydrologic Section of the Deer Creek MRP)].

VLFEM surveys conducted in Rilda Canyon were performed by Hansen Allen & Luce (HA&L) of Salt Lake City, Utah. Survey procedures utilized by HA&L consisted of selecting a transmitter station which provides a field approximately parallel to the traverse direction (i.e., approximately perpendicular to the expected strike of a conductor). VLFEM transmitter stations are located at several points around the globe. They broadcast at frequencies close to 20,000 Hz, which is low compared to the normal broadcast band. Data were collected utilizing a hand held instrument manufactured by Corne Geophysical Limited on fifty-foot intervals along the transect with two readings collected at each location: 1) field strength, and 2) dip angle (in degrees from a horizontal plane). It should be stressed that data collected during VLFEM surveys are very sensitive to sharp changes in topography and natural and manmade metallic material such as fences, pipelines, etc. In Rilda Canyon very little manmade materials exist except for wire fence which surrounds the NEWUSSD spring collection area shown on Figure HF-9B (refer to Volume 9 - Hydrologic Section of the Deer Creek MRP). Pipelines used to collect and transport the

spring water in Rilda Canyon are constructed of PVC and are considered to have little or no adverse impact on the data that was collected. It should also be stressed that the VLFEM data should only be considered one facet of the hydrologic investigation conducted in Rilda Canyon and not the sole source of hydrologic interpretation.

PacifiCorp contracted Geowestern to conduct a resistivity and induced polarization (I.P.) survey in Rilda and Mill Fork canyons in the summers of 1989 and 1992 (refer to Volume 9 - Hydrologic Support Information). The intent of the survey was to identify fractures in the strata and the depth of alluvium in Rilda Canyon by contrasting areas of Resistivity and I.P. response. As with the VLFEM data, resistivity-I.P. assisted in the hydrologic interpretation and was utilized to plan the location and depth of wells constructed for hydrologic drawdown conducted in November 1990.

Resistivity-I.P. surveys have been utilized for many years to map out subsurface occurrences of groundwater or mineralization. Because groundwater within the Wasatch Plateau tends to be concentrated along fractures, Resistivity-I.P. surveys can effectively identify fractures, faults included. Where strata are present at depths having highly contrasting resistivity or I.P. response, displacement along a fault can be detected by the offset of the depth to the contrasting beds. Where faults are present within a survey area but the strata is fairly uniform in resistivity and I.P. response, no displacement will be recognized in the data collected but the fault plane itself will most likely be easily detected. The latter scenario is normally the case within the adjacent area; therefore, the surveys will identify water-filled fractures and faults but will not always differentiate between the two. Most of the anomalies identified will be fractures, and differentiating between faults and fractures requires additional geologic data provided by field mapping or published data.

The resistivity-I.P. survey was conducted on nine separate lines, eight in Rilda Canyon and one in Mill Fork Canyon (see Map HM-7 [refer to Volume 9 - Hydrologic Section of the Deer Creek MRP]). Three of the lines (longitudinal) were along roads in the canyon bottoms in both Rilda and Mill Fork canyons. Six lines were transverse, across Rilda Canyon, and were designed to identify the depth of alluvial fill in the canyon bottom.

The resistivity survey used the pole-dipole configuration with station intervals of fifty (50) feet on longitudinal lines and twenty (20) feet on transverse lines. Resistivity and I.P. values were measured at separate intervals of 100, 200, 300, and 400 feet on each of the longitudinal lines and 20, 40, 60, and 80 feet on the transverse lines. These separations in data collection allowed the recovery of data that revealed conditions up to 400 feet in depth on both the longitudinal and transverse lines. The I.P. survey used the time-domain method and reflects

areas where the ground has a greater electrical capacitance, a condition normally caused by disseminated sulfides which, on our property, would most likely be minor amounts of pyrite along fractures.

Rapid changes in the resistivity or I.P. response of the surveys are almost always associated with fractures in a geologic setting and can follow a distinct trend at depth which allows the determination of the angle of dip of the fracture. The Resistivity-I.P. survey identified several anomalies indicating fractures and/or faults. The fractures which cause the anomalies dip steeply in a westerly direction or are vertical. The degree of dip associated with each fracture is shown on Map HM-7 (refer to Volume 9 - Hydrologic Section of the Deer Creek MRP). Each of the anomalous areas representing fractures was examined in the field and on aerial photographs to determine the significance of the anomalies. The geophysical data was then compared with geologic data collected in the field and from publicly available reports, making it possible to locate a fault graben (Mill Canyon Graben) system trending in a northeast direction which cuts across the western portion of our northern reserves (see Map HM-7 [refer to Volume 9 - Hydrologic Section of the Deer Creek MRP]). The southernmost fault of the graben was intersected in Beaver Creek Coal Company's #4 Mine in Mill Fork Canyon and has a displacement of about twenty (20) feet down on the northwest side. Where it crosses the northern end of East Mountain, the fault has been mapped to have a displacement of thirty (30) feet down on the northwest side. All other faults in the graben system have a relative displacement which is up on the northwest side.

Several anomalies to the southeast of the Mill Fork Canyon Graben were identified by the Resistivity-I.P. survey. No displacement is identified on any of them. The anomalies are on the same geologic trend as areas mined in the Beaver Creek Coal Company #4 Mine where no faults exist; therefore, in all probability they are water saturated fractures having no vertical displacement.

The transverse lines (R-3 through R-5, and R-7 through R-9) were designed to provide data regarding the depth of the alluvium in the canyon bottom. The alluvial/bedrock contact is identifiable on the profiles and provides important information on the hydrology of the springs located in the canyon. The alluvial floor is up to seventy (70) feet thick as indicated by resistivity profiles R-3 through R-5 and drill hole information obtained from P-6 and P-7 (see Figure HF-10 [refer to Volume 9 - Hydrologic Section of the Deer Creek MRP]). Again, it should be stressed that the resistivity data should only be considered one facet of the hydrologic investigation conducted in Rilda Canyon and not the sole source of hydrologic interpretation.

Description of NEWUSSD Spring Collection System

The NEWUSSD spring system consists of a series of collection lines extending westward up Rilda Canyon and southward up a small side drainage as shown on Map HM-8 (refer to Volume 9 - Hydrologic Section of the Deer Creek MRP). The NEWUSSD spring system is metered at four locations. Meter 1 (Side Canyon Spring) is located at the downstream end of a collection line which enters Rilda Canyon from the South. Meter 2 (Side Canyon Spring plus South Spring) is located near the bottom of the main east-west trending collection line which lies to the south of Rilda Canyon Creek at a point just upstream (west) of the main spring collection box. Meter 2 records combined flows from both the Side Canyon (Meter 1) as well as additional inflows which enter the system below Meter 1 known as South Spring. Meter 3 (North Spring) records flows for the east-west central collection line which was constructed through the central portions of the valley near Rilda Canyon Creek. Meter 4 (North Spring) collects data from the north collection line located on the north side of Rilda Canyon Creek. Meter 3 and Meter 4 were combined in 1995 during the Rilda Canyon road improvement project.

In addition to the main spring collection lines, there are two flumes in the vicinity which monitor flow rates within Rilda Canyon Creek. The upper flume, RCF-2, is located adjacent to the extreme west end of the spring collection system monitored by Meter 4. Flume RCF-3 is located in Rilda Canyon Creek adjacent to spring collection Meter 2.

Initially five shallow wells were located in the area surrounding the spring collection system to monitor groundwater level fluctuations through time. The locations of the wells are shown on Volume 9 Map HM-9. Wells 1 through 5 are relatively shallow wells which were constructed prior to 1989. In 1990 two additional large diameter wells were developed, (Wells 6 and 7) adjacent to wells P-2 and P-3, respectively, in order to obtain more complete groundwater data through aquifer testing. Wells P-2 and P-3 were abandoned and sealed in 1995.

Quantity

Through the cooperative efforts of PacifiCorp and NEWUSSD, flow meters were installed in September 1990 to isolate individual spring areas for quantity and quality [refer to Map HM-8 (Volume 9 - Hydrologic Section of the Deer Creek MRP)]. Flow from Rilda Canyon Springs is directly related to the spring runoff (i.e. precipitation received from the previous winter). Spring output ranges from approximately 300 GPM during high runoff to approximately 75 GPM during the winter months. Based on measurements collected prior to the time when Meters 3 and Meter 4 were combined, the majority of the flow was from Meters 3 and 4, approximately 46% and 49%, respectively (refer to Annual Hydrologic Reports for detailed flow information). The seasonal variation of the monthly average flow from all NEWUSSD's Rilda Canyon Springs is shown in the Annual Hydrologic Monitoring Reports. With the installation of the flow meters, individual spring contribution to the total flow can be plotted over time.

PacifiCorp contracted Hansen, Allen & Luce (HA&L) in 1990 to conduct a hydrologic test in Rilda Canyon. The overall purpose of the hydrologic testing was to determine to the degree possible: 1) general hydrologic conditions associated with the NEWUSSD springs, including the general direction of groundwater movement; 2) the potential origin of waters feeding the NEWUSSD springs; and 3) a determination of general aquifer characteristics, including transmissivity. Earlier reports (April 1983 and March 1984) prepared by Vaughn Hansen Associates identified the source of water from the North Spring to originate from two general sources. The earlier report concluded that the source of water originated from a north-south trending subsurface anomaly which may be a strike slip fault located immediately downstream of the main North Spring area. The latter, using additional data collected, concluded that there also appears to be an east-west trending anomaly which intersects the north-south anomaly just north of the North Spring. Water collected in the east-west anomaly from surface and/or fault sources located higher in the canyon may issue forth at the North Spring as the water comes in contact with the north-south trending anomaly. It was believed at the onset of the project that the source of water (whether from the north-south trending anomaly or from sources farther up the canyon) could be determined by pumping strategically placed wells near the sources of water.

Upon initiation of the project PacifiCorp and HA&L met to determine the most efficient method of proceeding with the proposed pumping tests. It was mentioned that because of the proximity of Well P-6 to the main spring collection area, pumping Well P-7 might produce clearer test results. Pumping P-6 would have an impact upon the main spring collection system; however, any attempts to determine the source of spring water could be masked by the influence of the drawdown cone. That is, by pumping P-6 both sources of recharge to the North Spring would be drawn upon, thereby making the attempt at isolation more difficult.

Soon after initiation of the project it was decided that the most complete data could be obtained by pump testing P-7 because of its location up gradient of the main spring collection area. If P-7 could be pumped sufficiently, the potential source of recharge water feeding the North Spring from the alluvial canyon fill west of the spring could be reduced without affecting water recharging the springs from the north-south trending anomaly or fault system. The level of impact due to pumping P-7 would then be an indicator of the general source of water issuing from the NEWUSSD springs.

The purpose of the pump test performed on P-7 was to pump the well to its maximum potential for a period of time sufficient to note and record impacts upon the NEWUSSD springs or other wells located in the vicinity. The amount of pumping and the level of impact on the local systems was used subsequent to the test to help document the source of water discharging into the NEWUSSD spring collection system. A pump test was run on P-7 continuously from 4:00 p.m. on November 13 through 12:30 p.m. on November 20, 1990. Throughout this period records were kept related to pumping conditions and flow rate discharging P-7, water levels in wells P-1 through P-7, and spring flows recorded at NEWUSSD spring collection meters 1 through 4. Well P-3 was dry throughout the test.

Aquifer Characteristics

The local groundwater system in the vicinity of the NEWUSSD springs consists of an unconfined alluvial valley fill aquifer as well as bedrock and fracture systems. Resistivity data provided by PacifiCorp indicate that the total maximum depth of alluvium ranges from 50 to 73 feet at the three locations where cross sections were taken. The locations of the resistivity cross sections within Rilda Canyon are shown on Map HM-7 (refer to Volume 9 - Hydrologic Section). The width of the unconfined aquifer varies due to the influence of side drainages which also feed the area.

Water moving throughout Rilda Canyon appears to originate from at least three sources (Vaughn Hansen Associates, 1983, Hydrologic Support Information: Rilda Canyon Pump Test and personnel communication with governmental agencies). The first and most obvious source is through the alluvial valley fill, the second is through an east-west trending fracture which is believed to lie to the north of the canyon floor, and the third is potentially through a north-south trending fracture which bisects the canyon just west of the NEWUSSD spring collection system. Extensive exploration conducted in Rilda and Mill Fork canyons parallel to the trend of the fracture systems outlined in earlier reports have failed to identify structural features which could contribute to the groundwater system. More is mentioned about water quality from these sources later in this document.

Springs within Rilda Canyon are believed to indicate and verify the locations of changes in geologic structure. Examples of local geologic structures and their impact on hydrology have been verified historically through stream and spring flow observations. The canyon drainage west (or above) the interface with the upper contact of the Star Point Sandstone is generally a discharging stream section. When alluvial waters come in contact with the more impermeable members of the upper Star Point Sandstone/Mancos Shale interface, they are often forced to the surface, creating springs. Local NEWUSSD springs confirm a recharging stream section. When these more impermeable formations are crossed, the stream once more becomes a losing stream until subsurface waters again come in contact with the more impermeable members of the Star Point Sandstone and underlying Mancos Shale formations. Some sections of the stream within Rilda Canyon gain flow, thereby evidencing the locations where subsurface water is forced to the surface by the tighter formations.

Data collected during and following the pump test of P-7 were used to provide estimates of local valley fill aquifer characteristics. For these analyses, data from both pumped Well P-7 and from observation Well P-6 were used during both the drawdown and recovery portions of the test. Well P-6 was used as an observation well over other local wells because 1) it is the closest to the pumped well, 2) it is up gradient from the north-south trending anomaly associated with the spring, 3) it showed the most response to pumping, and 4) the data were more consistent than other data collected.

In order to analyze the data in an acceptable fashion, the data sets were broken into three separate portions. The first data set has been termed the "initial" data set and includes time and drawdown data from P-7 for the beginning period of the test where the flow rate was recorded to be equal to 8.22 gpm. The "intermediate" data set includes data subsequent to that time when the flow rate was increased to an average value over time of 16.4 gpm. The third data set includes data taken during the "recovery" portion of the test after the pump in P-7 was shut off.

Three basic analytical methods--the Cooper-Jacob, Theis, and Neuman methods--were used to estimate aquifer transmissivity for the data contained herein. Each method, along with applicable data, is discussed separately in the following sections.

Cooper-Jacob Drawdown and Recovery Analyses

*Drawdown Methods*The Cooper-Jacob straight line method of analysis utilizes a semi-log plot for the display and analysis of the data as shown on Figure HF-12 (refer to Volume 9 - Hydrologic Section). The data shown on the plot entitled "PacifiCorp P-7 Initial Data Q=8.22 gpm" have three general slopes. The first few data points are usually ignored in a pump test because they reflect initial drawdown anomalies generally due to evacuation of the well drill stem or casing. The next set of data, beginning at two minutes and running through 100 minutes, show a good aquifer response and an associated transmissivity of approximately 35,650 gpd/ft. The plot, however, shows that a change in the slope of the data occurred at about 100 minutes. Such a change in grade generally indicates the presence of a boundary condition which, in the case of Rilda Canyon, reflects the bedrock of the canyon walls. Generally under such conditions the slope of the curve after the time in which the boundary was encountered will double (refer to Figure HF-13, Volume 9 - Hydrologic Section). The slope of the straight line for the latter part of the data shows a transmissivity on the order of 21,100 gpd/ft, a forty percent decrease. Based upon this data it is believed that the initial transmissivity of the alluvial valley is on the order of 35,000 gpd/ft for the initial period of pumping, during which time the aquifer is unaffected by distant barriers. After a barrier influences groundwater hydrology, the transmissivity reduces to the estimated 21,100 gpd/ft.

Intermediate data provide similar results. The barrier effects discussed occurred within the first 100 minutes of pumping, before data was collected for this data set; therefore, the majority of the impacts due to the barrier already will have been accounted for although some effects should occur due to an increased pumping rate. With this in mind, the straight line Cooper-Jacob analysis produces a transmissivity of 17,550 gpd/ft, as shown in Figure HF-14 (refer to Volume 9 - Hydrologic Section). Although slightly less, this value is similar in nature and magnitude to that found for the last half of the initial data set.

An analysis of the intermediate data was also made by using data collected from P-6 located approximately 500 feet to the east of P-7. The analysis shown in Figure HM-15 (refer to Volume 9 - Hydrologic Section) indicates that the long-term transmissivity for this data set is in the rage of 23,800 gpd/ft. Again, this is in the general range of estimates already made above.

*Recovery Methods* - Straight line methods of analysis are also used for well recovery data taken after the pump is shut off. In the case of P-7 the recovery curves are shown as Figures HM-16 and HM-17 (refer to Volume 9 - Hydrologic Section). Immediately after pumping ceases in a well, water levels recover at an abnormally high rate in a similar fashion to what occurred during the first two minutes of the pumping test as shown in Figure HM-12 (refer to Volume 9 - Hydrologic Section). By taking the next set of data, a straight line can be fit to obtain an approximation of long-term transmissivity on the order of 13,700 gpd/ft, as shown in Figure HF-16 (refer to Volume 9 - Hydrologic Section). Although this estimate is a little low compared to the estimate given above, it is of the same order of magnitude.

Short-term transmissivity is checked for the recovery data by fitting a straight line through the low end of the data. The transmissivity under short-term pumping is estimated at 35,900 gpd/ft, which matches very well the 35,650 gpd/ft estimate made by utilizing the Cooper-Jacob straight line drawdown analysis discussed above.

Theis Drawdown Analysis

The Theis method of solution utilizes a log-log plot of drawdown versus time as shown on Figure HM-18 (refer to Volume 9 - Hydrologic Section). The solution is achieved by matching a well function curve to the data as shown. It should be noted that the data utilizing this method of solution does not readily show the boundary condition which was identified by the Cooper-Jacob solution method. There is a slight curvature of the data at about the 100-minute time mark as shown on the plot; however, without other methods it is unlikely that a boundary condition would have been identified for this data set. Since the solution does not identify a boundary condition, the solution reached is a mix of both short- and long-term transmissivities. An analysis using this approximation method (resulting in an average transmissivity) results in an estimate of 28,450 gpd/ft.

A check of the estimate can be made by averaging transmissivities for both the initial short-term and intermediate long-term data sets obtained using the Cooper-Jacob method. The average of 35,650 and 21,100 gpd/ft is 28,380 gpd/ft, which is within one-half of a percent of the estimate given above using the Theis method.

An analysis of the intermediate data shown on Figure HM-19 (refer to Volume 9 - Hydrologic Section) shows that the estimated long-term transmissivity using the Theis method is on the order of 17,900 gpd/ft, which can be compared to the 17,550 gpd/ft estimate made using the Cooper-Jacob method. The estimates indicated are within two percent of each other, again showing good correlation.

Neuman Drawdown Analysis

The third method of analysis is based upon unconfined aquifer solutions as determined by Neuman. His analysis utilizes two basic curve types. The "Type A" curve is characteristic of that shown on Figures HM-20 and HM-21 (refer to Volume 9 - Hydrologic Section) where the curve is a power curve asymptotic to the horizontal line. "Type B" curves bend in the opposite direction, i.e., they start relatively flat and turn upward as one moves to the right on the plot. Slight trends toward both the "Type A" and "Type B" curves can be seen on Figure HM-20 (refer to Volume 9 - Hydrologic Section). A "Type A" curve could be fit to the data between times 1 and 30, and a "Type B" curve could be fit to the data between times 30 and 1000; however, because the data is influenced by the presence of a boundary condition (as discussed above) and because the Neuman solution does not identify boundary conditions in its methodology, such an analysis would provide inaccurate results. As a compromise, an average solution is attempted by analyzing the data based upon the complete data set wherein an estimate of 13,150 gpd/ft is obtained. Although lower than some of the earlier estimates made, this estimate again has the same relative order of magnitude.

The intermediate data set was also analyzed using the Neuman approach as shown in Figure HM-21 (refer to Volume 9 - Hydrologic Section). From the data it is seen that this solution predicts a low value of transmissivity. It is believed that the other predictions of transmissivity given above are more accurate and reliable than this estimate because of the reasons discussed in the previous paragraph.

Aquifer transmissivities as determined by the methods listed above range from a low of 6,100 gpd/ft to a high of 35,900 gpd/ft. As a summary of values determined, the following table is provided. The table contains a column identified as "Credibility of Results" which is intended to be a guide to the numbers given. A high credibility rating indicates that the method basically accounts for conditions believed to exist within Rilda Canyon. A medium credibility indicates that the numbers are within the range expected but that the solution may not be as accurate as another method. A low credibility indicates that, for these conditions, the solution does not appear to fully account for identified field conditions. As outlined in the table, it is believed that long-term transmissivities are on the order of 20,000 gpd/ft and short-term transmissivities are on the order of 35,000 gpd/ft. The variation in results appears to be due to boundary effects created by the canyon walls. If used for further analyses, the short-term transmissivity estimates should govern.

| **SUMMARY OF CALCULATED TRANSMISSIVITIES** | | | | | | | |
|---|---|---|---|---|---|---|---|
| **Analysis Used** | **Data Type** | **Well Data Used** | **Estimated Transmissivity (gpd/ft)** | | **Credibility of Results** | | |
| | | | **Short-Term** | **Long-Term** | **High** | **Medium** | **Low** |

| | | | | | | | |
|---|---|---|---|---|---|---|---|
| Cooper-Jacob | Drawdown | P-7 | 35,650 | 17,550-21,000 | ✖ | | |
| Cooper-Jacob | Drawdown | P-6 | | 23,600 | ✖ | | |
| Cooper-Jacob | Recovery | P-7 | 35,900 | 13,700 | ✖ | ✖ | |
| Theis | Drawdown | P-7 | 28,450 | 17,900 | ✖ | ✖ | |
| Neuman | Drawdown | P-7 | 13,150 | 6,100 | | | ✖ |

Quality

Initial water quality investigations (sampling consisted of wells P-1 through P-5 and three spring collection areas) conducted by West Appa Coal Company in the fall of 1982 indicated two distinct classes of groundwater (primarily defined by sulfate concentrations). Illustrated on Figures HF-22, 23, and 24, (refer to Volume 9 - Hydrologic Section), are the percent reacting values for major cations and anions for the five piezometers and three spring collection areas as determined from samples collected on September 16, October 15, and December 6, 1982, respectively. As illustrated on the figures, there are two distinct groupings of data from the various sources with regard to sulfate concentrations and total dissolved solids (TDS) concentrations. In general, the Side Canyon Spring, the South Spring collection zone, and well P-4 contain groundwater higher in TDS and sulfate concentrations than do the North Spring collection zone, wells P-2 and P-5.

Differences in the above-referenced groupings of data reflect differences in the groundwater source or the origin of groundwater for the various springs issuing within the Rilda Springs area. The Side Canyon Spring is located at or near the base of the Blackhawk Formation. The higher sulfate concentrations and TDS concentrations from the spring are characteristic of waters associated with the Blackhawk Formation. The similarity in water quality between the Side Canyon Spring and the South Spring collection area, Meter 2, would indicate that South Spring waters are also primarily of Blackhawk origin. The slightly better quality of South Spring water over the Side Canyon Spring water indicates that some of the South Spring water is derived from waters moving within the alluvial deposits.

As illustrated by TDS concentrations on Figures HF-22, 23, and 24, (refer to Volume 9 - Hydrologic Section), waters issuing from the North Spring, (Meters 3 and 4), collection area are of a better quality than waters from the Side Canyon and South Spring collection areas. Waters issuing from the North Spring originate primarily from water moving within the alluvial valley sediments and are not derived from the Blackhawk Formation.

Additional water quality sampling conducted by PacifiCorp during 1990 confirmed the early results obtained by West Appa. In summary, water quality of the North Spring does not generally correlate well with waters originating from the south as measured by Meter 1 (Side Canyon) and Meter 2 (South Spring), and are similar to surface waters monitored within Rilda Canyon. The water appears to be more highly correlated with waters moving toward

the NEWUSSD springs from the west. Water movement from the west is most likely through alluvial deposits associated with Right and Left forks of Rilda Canyon. Additional sources may be through faulting and fracturing systems within Rilda Canyon or through the north-south anomaly which passes through the west end of the spring collection system. Extensive exploration conducted in Rilda and Mill Fork canyons parallel to the trend of the fracture systems outlined in earlier reports have failed to identify structual features which could contribute to the groundwater system. The waters originating through the alluvial valley fill appear to have different water quality characteristics than those of the southern springs (refer to Annual Hydrologic Monitoring Reports for a detailed analysis of the water characteristics of the individual springs and Rilda Canyon Creek).

Piezometric Surface

Water level data collected at each of the wells or piezometers within Rilda Canyon has been compiled to indicate the general orientation and direction of groundwater within the vicinity of the NEWUSSD springs as shown on Map HM-8 (refer to Volume 9 - Hydrologic Section). Note from the map that the general direction of groundwater continues to be to the east along the axis of Rilda Canyon with flow contributions being received by the drainage entering from the south. Water table gradients for the area are dependent upon the time of year as well as overall groundwater recharge characteristics. For example, from the map it can be found that the average slope of the monitored water table lying between wells P-7 and P-5 was 4.3 percent in November 1990. At the same time, the average water table gradient increases down gradient of P-5 where it was found to be 6.4 percent. The fact that the water table gradient increases downstream of P-5 still tends to confirm the presence of the north-south anomaly, (stratigraphic interface or fracturing). A check of water table gradients during high flow periods shows larger values than were noted in the latter part of 1990. Analysis of historic data shows that, although flow patterns are relatively unchanged during high flow periods, the water table gradient above P-5 may have been as high as 7.4 percent in 1987.

Groundwater Quantity Based on Pump Test Results

An approximation of the total groundwater flow moving eastward down Rilda Canyon was made using data collected from the resistivity studies completed by PacifiCorp and from data collected at local area wells. The flow approximation was made by applying the general flow equation Q=VA. The area of groundwater flow was determined using the inferred cross sectional area identified in the resistivity study as "R-3" (see Map HM-7 Volume 9 - Hydrologic Section) for the canyon adjacent to P-7. The velocity of groundwater movement was determined from the relationship between hydraulic permeability and groundwater gradient, V=ki. Permeability was determined from the estimate for short-term transmissivity obtained using the methods discussed earlier. It was felt that under flow conditions uninfluenced by man, the short-term transmissivity is most representative of natural conditions. Using these relationships, the estimated amount of groundwater moving down Rilda Canyon was determined for both high and low flow conditions.

Based on historic data, low flow conditions were found to dominate during the period of the 1990 pump test; however, it has been noted by PacifiCorp that a rise in water level occurs within Rilda Canyon wells each year as the groundwater aquifer responds to snow melt runoff. Historical data reproduced in Figure HF-25 (refer to Volume 9 - Hydrologic Section) for wells 1 through 5 shows seasonal and annual water level fluctuations. Note the relative change in water level between wells. Little overall variation is noted except for P-3 which shows changes over time totaling approximately thirteen to fourteen (13-14) feet. Changes recorded in P-3 are likely greater than those indicated by Figure HF-25, (refer to Volume 9 - Hydrologic Section) because P-3 is only thirty-eight (38) feet deep and water levels have been known to drop below the bottom of the well. A comparison of water level variations between P-3 and adjacent P-7 indicates that the total water level fluctuation may be as much as twenty-two (22) feet(actual data collected from 1990 through 1996 reveals the maximum rise in water level of approximately twenty eight [28] feet, refer to Annual Hydrologic Monitoring Reports).

*Low Flow*. The first condition analyzed was based upon the relatively low flow condition found in November 1990. Using the relationship Q=VA as discussed above, the total alluvial valley aquifer flow in the area of P-7 was estimated to be approximately 151 gpm. Subtracting an average pumped Volume of 16.4 gpm from P-7, an estimated flow of 135 gpm bypassed P-7 and continued downstream toward the NEWUSSD spring collection system. Impacts noted upon the NEWUSSD spring system as a result of pumping P-7 appear to be confined to a reduction in flow from the springs on the order of ten percent. Before pumping began, total combined spring flows were approximately 85 gpm. During the later stages of pumping, just prior to termination of the test, spring flows had reduced to approximately 77.5 gpm, indicating a reduction in flow of 7.5 gpm during the pump test. Additional reductions in flow will probably occur as flows continue to stabilize.

*High Flow*. High flow conditions were estimated by adding to the 151 gpm base flow calculated for the November 1990 period the additional flow which would move down the canyon given a twenty-two (22) foot rise in water level which would occur during a wet year. The additional flow projected to occur during wet years was estimated by 1) measuring the cross sectional area which would result from a twenty-two (22) foot rise in the water table and 2) by applying the flow relationship Q=kiA. As indicated earlier, the water table gradient (i) used in this equation was found to be greater in 1987 than during the November 1990 test. Based on these assumptions, increased water levels measured during the high flow period of 1987 resulted in an estimated alluvial valley aquifer flow rate of 372 gpm.

## B. EXISTING SURFACE RESOURCES

Presented within this section of the report is the regional hydrologic setting as well as the site specific description of hydrologic surface water characteristics of the permit and adjacent areas.

1. REGIONAL AND PERMIT AND ADJACENT AREA SURFACE WATER HYDROLOGY

The PacifiCorp permit and adjacent area is located in the headwater region of the San Rafael River Basin (refer to Volume 9 - Hydrologic Section: Figure HF-26). The surface drainage system of the North Rilda area is confined exclusively to the Huntington Creek drainage system (refer to Volume 9 - Hydrologic Sction: Map HM-1). Huntington Creek drains approximately 190 square miles of the Wasatch Plateau in central Utah. Altitude changes rapidly across the Wasatch Plateau with steep canyon sides and high mountain peaks. Altitudes range from 6,000 to 10,700 feet. Average precipitation generally increases with altitude and ranges from ten (10) inches near the town of Huntington to thirty (30) inches in the upper reaches of Huntington Creek. Most of the precipitation occurs during winter months in the form of snow.

Water use upstream from Castle Valley (the monoclinal valley containing most of the agricultural land noted in Figure HM-27 [refer to Volume 9 - Hydrologic Section]) is primarily for stock watering and industrial purposes (coal mining and electrical power generation). Within Castle Valley, agriculture and power production utilize nearly all of the inflowing water (Mundorff, 1972) with minimum flows in the gaged streams occasionally approaching zero. Transbasin diversions occur throughout the area.

In general, the chemical quality of water in the headwaters of the San Rafael River Basin is excellent, with these watersheds providing most of the domestic water needs to the people below; however, quality rapidly deteriorates downstream as the streams cross shale formations (particularly the Mancos Shale in and adjacent to Castle Valley) and receive irrigation return flows from lands situated on Mancos-derived soils (Price and Waddell, 1973). Dissolved solids concentrations range from about 100 to 600 mg/l in the mountain regions and from 600 to 6000 mg/l in Castle Valley.

Huntington Creek above the USGS stream gaging station (0318000) near the town of Huntington drains approximately 190 square miles. Storage reservoirs regulate runoff from fifty-four square miles in the upper part of Huntington Creek. The average channel gradient of Huntington Creek above Huntington is about 100 feet per mile (1.9 percent). Danielson et al. (1981) estimate the average annual precipitation on the Huntington Creek drainage to be on the order of twenty-six (26) inches. The average discharge at the USGS gage near Huntington is approximately ninety-six (96) cubic feet per second (70,000 acre-feet per year). The USGS estimates that "during most years, about 65 percent of the annual discharge at the Huntington Creek station (09318000) occurs during the snowmelt period (April-July)" (Danielson et al., 1981, p. 110). For example, the monthly distribution of flows for Huntington Creek near

Huntington for the water year 1978, corrected for the influence of Electric Lake Dam, is shown on Figure HF-28 (refer to Volume 9 - Hydrologic Section). The annual peak flows recorded for the USGS station near Huntington are plotted on Figure HM-29. While the majority of stream flows are due to snow melt, thunderstorms of high intensity are common in the area during the summer months. A review of the discharge records for Huntington Creek near Huntington shows that twenty-two of seventy-one (31 percent) measured annual peak flows occurred during July, August, or September. The largest annual peak flows have been caused by thunderstorms. Of the measured annual peak flows on Huntington Creek near Huntington, eight annual events have been greater than 1600 cfs (about a 10-year return period), all of which occurred during July, August, or September. The peak discharge of record was 2500 cfs on August 2 or 3, 1930.

The North Rilda area is drained by two drainage systems, Rilda, and Mill Fork canyons (refer to Volume 9 Map HM-9,). Listed below is the individual breakdown for each individual mine plan area including stream classification.

| MINE PLAN AREAS | DRAINAGE SYSTEM | STREAM CLASSIFICATION |
|---|---|---|
| North Rilda | Rilda | Ephemeral-Perennial |
| | Mill Fork | Ephemeral-Intermittent |

The upper reaches of Rilda and Mill Fork canyons are ephemeral. Rilda Canyon Creek is considered perennial below the springs located along the western border of Section 28, Township 16 South, Range 7 East, Mill Fork Canyon is intermittent from Section 21, Township 16 South, Range 7 East to the confluence of Huntington Canyon. Most of the streams in the mine plan area are spring fed. PacifiCorp has monitored all of the surface waters since 1979 and will continue to monitor them in the future. The data collected is included in each annual Hydrologic Monitoring Report.

North Rilda Adjacent Area Watershed Characteristics

All of the streams within the extended mine plan boundary are ephemeral-intermittent/perennial, as mentioned earlier. Elevations in the adjacent area range from approximately 7000 feet to near 10,400 feet. General land slopes in the adjacent area range from near vertical along the Castlegate escarpment to less than four percent. Vegetative cover consists of sagebrush, juniper, and grasses on the south-facing slopes and dense conifer and aspen complexes on the north-facing slopes.

Water sources within the mine plan area include springs and seeps, which were discussed earlier in the Existing Groundwater Resources section of this report. There are no major water bodies located within or immediately adjacent to the mine plan area.

*Rilda Canyon Geomorphology Investigation*

To evaluate and document the geomorphology characteristics of Rilda Creek, PacifiCorp retained EarthFax Engineering to conduct a field investigation of Rilda Creek from above the forks to below the proposed location of the sediment pond, refer to Volume 11 Appendix Volume - Hydrology: Appendix C. The following is an outline of the study objectives:

- ✧ Establish permanent benchmarks and cross sections at six locations along Rilda Canyon. One of these will be established on the right fork above to the proposed surface facilities, one on the left fork (also adjacent to the proposed facilities), and four along the main channel (two adjacent to the proposed upper facilities, one between the two NEWUSSD spring collection areas, and one downstream from the lower collection area). This will allow data to be collected from areas of planned (upper) or potential (lower) surface facilities.
- ✧ Survey channel cross-sections and gradients at the established locations in accordance with USFS guidelines. During the field surveys, collect sufficient information to classify the stream sections in accordance with the Rosgen procedure. Also, gather information concerning stream bed materials.
- ✧ Prepare drawings showing surveyed cross section and profile data.
- ✧ Evaluate data collected previously by PacifiCorp from piezometers installed in Rilda Canyon, supplemented by field observations. This will include information concerning:
  - Water table fluctuations relative to the elevation of the adjacent stream channel
  - Stratification of alluvial sediment within the stream corridor
  - Composition of stream bank material
  - Identification of zones of seasonally saturated and infrequently saturated soils
  - Evaluate historic streamflow data collected by PacifiCorp from Rilda Canyon
- ✧ Calculate flood-flow magnitudes based on regional regression equations
- ✧ Plot various streambank zones on a plan map of the canyon, based on field observations and data collected by Mt. Nebo Scientific (i.e., riparian zone, bank zone, overbank zone, and upland zone).

For complete discussion related to the geomorphology characteristics of Rilda Creek refer to Volume 11 Appendix Volume - Hydrology: Appendix C.

*Biological Organisms and Their Habitat within Rilda Canyon*

In addition to the geomorphology characteristics study of Rilda Creek, the Division of Wildlife Resources conducted biological organism and habitat study of Rilda Creek through the years 2004 -2008, refer to Volume 11 Appendix Volume - Biology: Appendix C. As stated in the report entitled "*Macroinvertebrate and Fish Surveys to Determine Evvects of Energy Development"*, representatives of the Utah Division of Wildlife Resources (UDWR) Southeastern Region were asked by the Utah Division of Oil, Gas and Mining to participate in an on-site meeting, discuss the impacts of this project on the biota within Rilda Canyon, and aid in the development of a comprehensive EA. During this and subsequent meetings it was decided that UDWR would conduct pre and post-disturbance evaluations of macroinvertebrate populations and identify resident fish populations in Rilda Creek. This report marks the completion of the pre- and post- disturbance sampling effort. Details on the methodology employed during macroinvertebrate and fish sampling and a limited results section are included in this report; refer to Volume 11 Appendix Volume - Biology: Appendix C for a copy of UDWR's comprehensive report.

Along with the DWR, PacifiCorp retained the services of Cirrus Ecological Solutions and Socio-Ecological Concepts to conduct the post-disturbance surveys that were conducted in the spring and fall of 2006, 2007 and 2008. Construction of the surface facilities began in April of 2006. A comprehensive report entitled "*Assessment of Pre- and Post-Disturbance Condition of Macroinvertebrates and Fish at Rilda Creek, Emery County, Utah (2004-2008)* is also found in Volume 11 Appendix Volume – Biology: Appendix C.

The overall results of the surveys suggest that the aquatic invertebrate community has not changed drastically following the construction activities in Rilda Canyon and suggests that water quality conditions have also remained stable. It was not possible to associate the differences observed (above and below the disturbance) to the construction activities. These variations were observed at all study sites.

2. WATER QUALITY AND QUANTITY

PacifiCorp maintains an extensive surface monitoring program to evaluate both quantity and quality of the two major drainage systems which incorporate the permit and adjacent area. The following will be divided into major and contributing tributary drainage systems.

<u>Huntington Creek Drainage System</u>

a) *Huntington Cree*k

Huntington Creek is comprised of many smaller tributary systems that feed the main stream. Rilda and Mill Fork canyon creeks are the only tributaries to Huntington Creek that emanate from within and adjacent to North Rilda mine plan area.

Huntington Creek flow data are recorded on a continuous basis by ~~UP&L~~ PacifiCorp Energy at two locations; one station is located near the Huntington Power Plant, the other below Electric Lake which is about twenty-two miles upstream from the Huntington Plant. Flow records are maintained by ~~UP&L~~ PacifiCorp Energy in order to determine water entitlements and reservoir storage allocation for the various users on the river.

The ~~UP&L~~ PacifiCorp Energy station near the plant was established in the fall of 1973. Prior flow records were obtained from the USGS station located about one mile downstream from ~~UP&L~~ PacifiCorp Energy's existing station. The USGS station was established in 1909 and discontinued in 1970 after determination of available water supply for the Electric Lake Dam. The dam was completed in December 1973, and water storage commenced shortly afterward.

The calculated natural flow rates, which consider actual flow recorded at the plant, plant diversions, Electric Lake storage, and lake evaporation along with yearly comparisons, are reported annually in the Hydrologic Monitoring Report.

Huntington Creek water quality information is compiled on a monthly basis for stations above and below the Huntington Plant, while samples for Huntington Creek below Electric Lake and the Right Fork are taken quarterly. The location of water quality sampling stations on Huntington Creek that were considered for this report are listed below (refer Volume 9 - Hydrologic Section: Map HM-1).

Below Electric Lake+*
Above the Forks+*
Below the Power Plant Diversion*
Below the Power Plant*
+Not listed on map due to scale
*The sites listed above are not considered part of PacifiCorp's Hydrologic Monitoring Program but will be included in the annual report as long as data is available.

In addition to the sites monitored by Huntington Plant-Environmental ~~Service~~ staff, three sites were added on Huntington Creek near the Deer Creek confluence in conjunction with the Deer Creek discharge permit.

Specific water quality data as well as yearly comparisons are reported annually in the Hydrologic Monitoring Report. This practice will continue throughout the life of the permit.

In general, the water shows a gradual increase in concentration of dissolved minerals as the flow proceeds down Huntington Canyon.

The values at the station below Electric Lake do not express the actual natural drainage water quality characteristics because of the lake effect, but it appears that the surface flow in Huntington Canyon is of very high quality in the upper reaches with some natural degradation occurring as the flow proceeds to the canyon mouth.

b) *Rilda Canyon Creek*

Rilda Canyon Creek is a tributary of Huntington Creek and is monitored according to the following schedule (see Hydrologic Monitoring Schedule refer to Volume 9 Appendix A).

Locations:

(1) Right Fork of Rilda - RCF1*
(2) Left Fork of Rilda - RCLF1 (Field data only)
(3) Left Fork of Rilda - RCLF2 (Field data only)
(4) Rilda Canyon - RCF2 (Field data only)
(5) Rilda Canyon - RCF3
(6) Rilda Canyon - RCW4 (Map HM-1, Volume 9 - Hydrologic Section and, Volume 9 Map HM-10).

* During mining of the North Rilda leases, an additional site has been added upstream of RCF1 (adjacent to EM-163) to monitor surface/groundwater flow relationships. Flow will be measured yearly during base flow conditions.

Flow information is collected during the first or second week of each month. Water samples will be collected and analyzed quarterly (one sample at low flow and high flow) during the first or second week of the quarter. Parameters analyzed are those listed in the DOGM Guidelines for Surface Water Operational Quality. The program was initiated in June 1989. Field measurements, including pH, specific conductivity, temperature, and dissolved oxygen, will be performed at the perennial stream locations (i.e., RCF3 and RCW4) monthly in conjunction with quantity measurements. Data regarding flow in Rilda Canyon Creek is presented in the annual Hydrologic Monitoring Report.

As stated above, flow information is collected monthly throughout the year with the use of three Parshall flumes and one V-notch weir (Volume 9 - Hydrologic Section: Map HM-1). Hydrographs comparing yearly flows are reported in the annual Hydrologic Monitoring Report and also as Figure HF-33 Volume 9 - Hydrologic Section: Map HM-1.

In accordance with the Hydrologic Monitoring Plan baseline quality analysis will be for a two-year period, 1989-90 (refer to the respective Annual Hydrologic reports). Baseline analysis will be repeated once every five (5) years. Quality sampling was initiated in 1989; results of the samples collected are presented in Table HT-7, (Volume 9 - Hydrologic Section: Map HM-1), and in the Hydrologic Monitoring Report.

c) *Mill Fork Canyon Creek*

Mill Fork Canyon Creek is a tributary of Huntington Creek and was included in PacifiCorp's monitoring program starting in 1997. Monitoring of Mill Fork will be conducted according to the following schedule (see Hydrologic Monitoring Schedule refer to Volume 9 Appendix A).

Locations:

(1) Above old mines - MFA1
(2) Mill Fork Canyon Culvert - MFB2 (Volume 9 - Hydrologic Section).

Flow information is collected during the first or second week of each month. Water samples will be collected and analyzed quarterly (one sample at low flow and high flow) during the first or second week of the quarter. Parameters analyzed are those listed in the DOGM Guidelines for Surface Water Operational Quality. The program was initiated in 1997. Field measurements, including pH, specific conductivity, temperature, and dissolved oxygen, will be performed at the perennial stream locations, monthly in conjunction with quantity measurements. Data regarding flow in Mill Fork Canyon Creek is presented in the annual Hydrologic Monitoring Report.

As stated above, flow information is collected monthly throughout the year (Volume 9 - Hydrologic Section: Map HM-1). Hydrographs comparing annual flows are reported in the annual Hydrologic Monitoring Report.

Historical monitoring data collected by Beaver Creek Coal Company - No. 4 Mine and the United States Geological Survey (site No. 76: Open File Report 81-539) has been incorporated in PacifiCorp's hydrologic database. Operational water quality monitoring was conducted during 1997 and 1998 (refer to the Quarterly Hydrologic submittals). Baseline quality analysis was initiated in November 1998. In accordance with the Hydrologic Monitoring Plan, baseline quality analysis will conducted be for a two-year period, forth quarter 1998 - fourth quarter 2000 (refer to the respective Annual Hydrologic

reports). Thereafter, baseline analysis will be repeated once every five (5) years.

3. SOIL LOSS AND SEDIMENT YIELD

Sediment load concentrations in the permit and adjacent area vary dramatically depending on the percentage of disturbed areas, ruggedness of the terrain, geologic formations present, the amount of precipitation the area receives, and stream flow volume.

As part of the U.S. Geological Survey water monitoring program in Utah coal fields (Open File Report #81-359), fourteen water samples associated with the permit and adjacent area were collected between August 1978 and September 1979 at gaging station 09318000 on Huntington Creek to determine suspended-sediment concentrations and loads. Three samples each were collected at gaging stations 09317919, 09317920, and 09324200 in Crandall and Tie Fork canyons. Five additional samples were collected by project personnel from these and other streams in the study area. Representative suspended-sediment concentrations and loads of streams in the study area are listed below.

As indicated from the samples collected by the USGS, the suspended-sediment concentrations varied widely among the drainages analyzed. The relatively low concentrations of suspended sediment were attributed to well established channels, low flow periods, and a scarcity of roads. Higher concentrations appeared to be associated with the activities of man and erosion of large exposures of the Mancos Shale formation in the lower reaches of the drainages. Sediment concentrations generally increased with increased stream discharge. Note that the highest values at all of the locations occurred during the spring runoff period, but not enough data were available to compute daily sediment discharge.

| Stream | Site No. | Suspended Sediment | | |
|---|---|---|---|---|
| | | Date | Concentration (mg/l) | Load (tons/day) |
| Huntington Creek (gaging station 09318000) | 88 | 8/12/1978 | 104 | 27 |
| | | 11/16/1978 | 72 | 2.5 |
| | | 6/12/1979 | 114 | 66 |
| | | 8/6/1979 | 44 | 15 |
| Crandall Creek (gaging station 09317919) | 51 | 8/11/1978 | 49 | 0.14 |
| | | 11/17/1978 | 60 | 0.08 |
| | | 6/13/1979 | 15 | 0.41 |
| | | 8/5/1979 | 56 | 0.15 |
| Tie Fork Canyon | 67 | 8/12/1978 | 12 | 0.03 |
| | | 11/17/1978 | 57 | 0.12 |
| | | 6/13/1979 | 38 | 0.68 |
| | | 8/5/1979 | 66 | 0.17 |
| Bear Creek | 81 | 10/24/1978 | 8860 | 1.9 |
| Deer Creek | 87 | 6/13/1979 | 609 | 3.1 |

PacifiCorp has collected samples on a quarterly basis from the streams within and adjacent to the permit area. Samples taken at periods of both high and low flow have been tested for total suspended solids (TSS) to identify stream stability and are reported annually in the Hydrologic Monitoring Report. Tables HT-5 through HT-8 show the TSS results for streams monitored by PacifiCorp (refer to Volume 9 - Hydrologic Section).

## *R645-301-723 Sampling and Analysis*

Water quality sampling and analysis of samples collected by PacifiCorp will be conducted according to the "Standard Methods for the Examination of Water and Wastewater." Refer to Volume 9 Appendix A for sample documentation and analytical methods and detection limits).

## *R645-301-724 Baseline Information*

PacifiCorp maintains an extensive groundwater and surface monitoring program to characterize pre-mining and any mining-related impacts both to quality and quantity. As an integral part of the permit application, an annual Hydrologic Monitoring Report is prepared by PacifiCorp and submitted to appropriate government agencies. Baseline information for the

East Mountain property will be divided into the following categories: 1) Groundwater, and 2) Surface Water.

Groundwater

The characteristics of the groundwater resource are dependent upon the geology of the water-bearing strata and on the geology and hydrology of the recharge area. Groundwater movement and storage characteristics are dependent on the characteristics of the substratum. To characterize the baseline quality and to document the existence of seasonal variations, PacifiCorp developed a groundwater monitoring program which includes sampling both surface springs and in-mine groundwater sources. The program was initiated during a period from 1977 through 1979. Routine monitoring continues to support the quality data collected during the initial phase. In general, data from the springs and in-mine sources are representative of the groundwater quality in the geologic strata from which the groundwater sources issue. Cation-anion diagrams have been utilized to depict the groundwater characteristics and to monitor quality trends. Results of the data collected have shown that, in both the surface springs and in-mine groundwater sources, variations in quality from individual sources do exist, but the quality from the individual sources remains consistent with time. Spring water is mostly calcium-bicarbonate with some magnesium and sulfate. As discussed in the General Requirement Section - R645-301-711, quality decreases with increasing downward vertical movement and from north to south with sulfate becoming a major constituent. Cation-anion diagrams have been included in the Annual Hydrologic Reports to support the lack of seasonal variation. A copy of the 1991 quality information is included in Volume 9 - Hydrologic Support Information, Baseline Section (additional information concerning groundwater quality can be found in the Annual Hydrologic reports).

Surface Water

The North Rilda mine plan area is drained by two drainage systems: Rilda Canyon, and Mill Fork Canyon. PacifiCorp has documented that all of the stream reaches emanating from within the North Rilda mine plan area with the exception of the lower portion Rilda Canyon creek cease flowing in the fall or winter, suggesting that they are not perennial but ephemeral/intermittent. Flow in the drainage is a combination of snow melt and springs. Most of the runoff occurs during the months of April through July. Even though the drainage systems are ephemeral, except for the lower reaches of Rilda Canyon, variations in quality do exist. Total dissolved solids increase gradually in concentration as flow proceeds from the upper plateau areas to the confluences of the major drainage of Huntington Canyon. Surface waters in the mine's extended adjacent area are predominantly bicarbonate, calcium, and magnesium in the upper reaches with sulfate becoming a major constituent in the lower reaches. The increase in sulfate concentration is due to the influence of the Mancos Shale, a marine shale which outcrops in the lower reach of each of the drainage systems. Seasonal total suspended solids variations also occur with the highest concentrations occurring during the initial runoff period. An annual summary sheet for each drainage is included in Volume 9 - Hydrologic Support Information, Baseline Section.

In addition to the water quality and quantity baseline data collected related to Rilda Canyon, PacifiCorp has included baseline studies which document the geomorphology characteristics and biological organisms of Rilda Creek. Refer to North Rilda Adjacent Area Watershed Characteristics for complete details pertaining to these studies.

**R645-301-724.100 Groundwater Information**

A detailed description of the ownership of existing wells, springs, and other groundwater resources, including seasonal quality and quantity of groundwater and usage, is given in sections R645-301-721 and 722.

**R645-301-724.200 Surface Water Information**

A detailed description of all surface water bodies, i.e., streams and lakes, including quality, quantity, and usage is given in section R645-301-711.

**R645-301-724.300 Geologic Information**

Applicable geologic information can be referenced in the Geologic section of the MRP.

**R645-301-724.400 Climatological Information**

PacifiCorp operates a network of weather stations, including two at low elevations (Hunter and Huntington power plants) and two at high elevations (Electric Lake and East Mountain).

Precipitation

The climate of the permit and adjacent areas has been described by the U.S. Geological Survey, which states that it is semi-arid to sub-humid and precipitation generally increases with altitude. The average annual precipitation ranges from about ten (10) inches in the lowest parts of the permit area (southeast) to more than twenty-five (25) inches in the highest parts (northwest). PacifiCorp's weather station, located in Section 26, Township 17 South, Range 7 East, has provided data which shows that the summer precipitation in the form of thundershowers averages about the same as the winter precipitation in the form of snowfall. Because much of the summer precipitation runs off without infiltration, the winter precipitation has the greatest impact on groundwater.

Precipitation amounts have been and will continue to be recorded at the Hunter and Huntington power plants, at Electric Lake Dam, and on East Mountain. Precipitation data can be found in the annual Hydrologic Monitoring Report (refer to Volume 9 - Hydrologic Section: Table HT-9 for East Mountain data).

Temperatures

Air temperatures vary considerably both diurnally and annually throughout the permit and adjacent areas. Midsummer daytime temperatures in lower areas commonly exceed 100$^{o}$ F, and midwinter nighttime temperatures throughout the area commonly are well below 0$^{o}$ F. The summer temperatures are accompanied by large evaporation rates. Although not recorded, there probably also is significant sublimation of the winter snowpack, particularly in the higher plateaus which are unprotected from dry winds common to the region. Temperature information is collected at the UP&L weather stations at each power plant, at Electric Lake, and on East Mountain. These data will continue to be included in the annual Hydrologic Monitoring Report (refer to Volume 9 - Hydrologic Section: Table HT-9 for East Mountain data).

Winds

The winds in the area are generally variable. The wind rose presented in Figure HF-36 (refer to Volume 9 - Hydrologic Section of the Deer Creek MRP) displays the variability for the Meetinghouse Ridge area for January to December 1978.

**R645-301-724.600 Survey of Renewable Resources Lands**

Information describing the existing groundwater resources, including descriptions of permit and adjacent area aquifers and areas of recharge can be found in section R645-301-721. Impacts related to mine subsidence can be found in section R645-301-728.

**R645-301-724.700 Alluvial Valley Floors**

Utah Regulations require that the presence of alluvial valley floors in or adjacent to the mine project area be identified. A detailed description of the alluvial valley floor deposits were described in the "REGIONAL GROUNDWATER CHARACTERISTICS" (refer to Volume 9 - Hydrologic Section).

## *R645-301-725 Baseline Cumulative Impact Area Information*

Hydrologic and geologic data required toassess the probable cumulative impacts of the coal mining and reclamation activities are presented in the Hydrologic (including the Annual Hydrologic reports), Operational, and Reclamation sections of the permit applications.

## *R645-301-728 Probable Hydrologic Consequences (PHC) Determination*

Probable hydrologic consequence determinations are based on extensive investigations conducted to determine existing groundwater and surface water resources along with ongoing hydrologic research and comprehensive monitoring programs including hydrologic and subsidence. Data utilized to arrive at the conclusions presented in this section were discussed earlier (see Section R645-301-711), and specific information pertaining to impacts to the hydrologic balance will be discussed under the appropriate section.

Description of the Mining Operation

The North Rilda mine plan area is located in the central portion of the Wasatch Plateau coal field in Emery County, Utah. Generally, this area is a flat-topped mesa surrounded by heavily vegetated slopes which extend to precipitous cliffs leading to the valley below. Much data has been collected regarding the geology and the hydrology of the East Mountain property. In all, over 120 drill holes have been completed from the surface, over 500 from within the mines; and a comprehensive hydrologic data collection program is ongoing, all of which have provided data used in this PHC. The most applicable data have been included in this document. For a review of additional data it is suggested that the reader refer to the annual Hydrologic Monitoring Report.

Geology

A detailed description of the geology (structure and stratigraphy) has been presented in a previous section and will not be duplicated here. (Refer to R645-301-711).

Mining Methods

Mining of the North Rilda mine plan area (mining operations in the Deer Creek Mine, including the North Rilda Area ceased January 7, 2015) will be conducted entirely by underground mining methods consisting of continuous miner and longwall techniques. Two minable coal seams exist within the property. In ascending order they are the Hiawatha and Blind Canyon (see operational plans of each separate permit application).

The chemical and physical properties of the overburden have been identified and described in the Geologic section (refer to Volume 8 and R645-301-600 Geology Section of this volume).

Because mining is limited to underground mining techniques, only minor amounts of overburden directly in contact with the seam, either roof or floor, will be removed during mining operations.

Surface Water System

A detailed description of the permit and adjacent area surface water resources has been presented in previous sections and will not be duplicated here. (Refer to R645-301-722). In general, the surface drainage system of the North Rilda area is divided into two drainages; the

southern portion forms part of Rilda Canyon Creek, and the northern portion contributes to Mill Fork Canyon. The Rilda Canyon drainage covers seventy-four percent (74%) of the North Rilda leases held by PacifiCorp. PacifiCorp has observed that all of the streams reaches emanating from within the permit and adjacent area boundary, with the exception of the lower portion of Rilda Canyon Creek, cease flowing in the fall or winter and periods of drought, suggesting that they are not perennial but ephemeral/intermittent. Rilda Canyon Creek is perennial below the springs located along the western border of Section 28, Township 16 South, Range 7 East, as it flows year round there. Most of the streams are spring fed. PacifiCorp has monitored all of the surface waters since 1989 and will continue to monitor them in the future (Mill Fork Canyon was monitored in the past by Beaver Creek Coal Company). The data collected is included in each annual Hydrologic Monitoring Report.

Impacts to surface water due to the underground operations of Deer Creek - North Rilda area will be minor, both in terms of quality and quantity. Due to the type of mining and limited surface disturbance, surface water impacts are minimal. A detailed analysis of the associated impacts is described in the Hydrologic Balance section below.

Hydrologic Balance - Surface Water System

As mentioned previously in this report, the drainages conveying runoff away from permit and adjacent areas are streams in Rilda, and Mill Fork canyons. Second mining (ie. longwall extraction, room & pillar) of the North Rilda area will be limited to the ridge separating Rilda and Mill Fork canyons and subsidence will not occur beneath the stream channels of these canyons. First mining (ie. mainline, gateroad development) will occur below the Right Fork of Rilda Canyon. For a complete analysis of the proposed "no subsidence / long term stability" design of the 5$^{th}$ North Mains development within the area of the right fork of Rilda and the long-term stability analysis refer to the Volume 11 Appendix Volume - Engineering: Appendix A. To protect the alluvial/colluvial system of the right fork of Rilda Canyon a stream buffer zone was established based on the extent of the riparian zone and the angle of draw from the Hiawatha Seam, the lowest seam to be mined. The riparian zone within the right fork of Rilda Canyon was delineated by field observation, aerial photography, and map contour analysis. The extent of the identified zone is based on the contact of the alluvial/colluvial fill with the canyon's side slopes. The angle of draw was calculated from the Hiawatha Seam horizon/elevation @ 15$^{o}$ to the point of intersection on the surface. The stream buffer zone delineates the area restricted to full extraction mining. The referenced 15 degree angle of draw is an industry/agency accepted standard used for delineation of surface influence protection from mining areas considered for full extraction mining. Mining experience at ~~Energy West's~~ PacifiCorp's Deer Creek, Cottonwood, and Trail Mountain (now owned and controlled by Bowie Resource Partners under a separate permit) mines has provided a sound, scientific basis for using the 15$^{o}$ angle of draw mentioned above (refer to Annual Subsidence Reports of the Deer Creek MRP).

The angle of draw of subsidence produced by full-extraction mining can be influenced by many factors. These include the size of the area mined, number of seams mined, fractures or faults

in the overburden, adjacent mine workings, and adjacent areas of burned coal and clinker. If mine workings extend to an area of burned coal, experience has shown that the overburden stresses above the mined area can be transferred to the adjacent burned coal and clinkers which can cause the clinkered areas to fail. In this case, the angle of draw may appear to be very shallow, when the crushing of the clinkered areas are the source of subsidence outside the normal area of influence.

Faults can also influence the angle of draw. If mining occurs adjacent to an existing fault, the area of subsidence will follow the natural plane of weakness formed by the fault. In this case, the angle of draw will be the same as the dip of the fault.

Based on data collected by the U.S. Bureau of Mines and eighteen years of subsidence data collection on East and Trail mountains, the angle of draw is found to be between 0 and 15 degrees from vertical. In some limited areas, the angle of draw is greater than 15 degrees, but in every case, the angle is greater due to the influence of one of the other factors mentioned above.

For planning purposes, any barrier of protection left in the mine to protect surface features should use a 15 degree angle of draw unless one of the factors mentioned above is known to exist in the immediate area.

In the majority of cases, cracking due to subsidence is not anticipated to extend to the surface; therefore, surface runoff patterns will not be significantly affected. Data collected by PacifiCorp over a ~~eighteen~~ thirty-year period concerning subsidence and surface drainages has not detected any surface stream impacts. Consequently, subsidence should not cause significant impacts to the surface water system.

Underground coal mines in the Wasatch Plateau coal field typically intersect groundwater from strata surrounding the coal seams. Both Deer Creek and Wilberg/Cottonwood mines have intersected quantities of water in excess of operational needs and therefore have discharged intercepted groundwater. Dewatering of Deer Creek has had only a minor impact on surface quality and quantity on a regional basis; however, on a site specific basis the flow in Deer Creek has increased from pre-mining conditions. During periods of high runoff changes in quality are insignificant; however, in low flow conditions some degradation is likely due to the fact that the mine discharge waters are higher in TDS than the surface waters. It is difficult to assess the degradation because it is not known from where or how much of the water discharged from the mine would naturally have been discharged into the receiving streams by natural groundwater flow. The section below will describe the dewatering of Deer Creek area and related surface impacts.

Excess water not utilized in the mining operation or for domestic use is either pumped to storage areas or discharged from the mine at the Deer Creek portals. NOTE: Deer Creek Mine portals were sealed April 17, 2015 as a facet of the Deer Creek mine closure process. All mining equipment including the mine dewatering system was removed from the mine prior to

sealing. Withdrawal of all mining equipment inby the parallel plug locations commenced upon completion of mining (refer to Map MFU1902D in Volume 12 for mine closure sequencing, Comprehensive Environmental Response, Compensation, and Liability Act inspections [equipment removal] and areas of belt structure removal). PacifiCorp coordinated removal of the mining equipment, including conducting environmental inspections, with the subsurface management agency and State of Utah regulators. A double redundant French drain system (two separate well screen intake setups installed in two separate portals) was installed in the two lowest elevation portals at the Deer Creek Mine site to allow for a permanent post mine gravity discharge of groundwater from the southern portion of the mine.

~~(Quality and quantity is reported in the Annual Hydrologic Report.)~~ Flow meters are utilized to record the amount of water discharged from the mine (Quality and quantity are reported in the Annual Hydrologic Report), after which it passes through underground sedimentation sumps (refer to Volume 9 - Hydrologic Section: Figure HF-38).

Potential effects to the Hydrologic Balance - Surface Water System as the result of expansion of mining operations to include additional surface facilities in Rilda Canyon include:

A. Alteration to Rilda Creek Stream Morphology
B. Increased Sediment Production to Rilda Creek
C. Increased Salinity in Rilda Creek
D. Increased Flow to Rilda Creek - Mine Water Discharge
E. Interference to Rilda Springs (Quality)
F. Alteration to the Biologic Communities

To minimize the effects to the hydrologic balance; site development (completed in fall of 2008) has been designed to include the following:

## A. ALTERATION TO RILDA CREEK STREAM MORPHOLOGY

All surface developments are north of Rilda Creek, thereby eliminating the need to place the main drainage in a culvert. The undisturbed areas adjacent to the disturbance associated with the Rilda Canyon Portal Facilities are drained by ephemeral drainages on the south facing slope of North Rilda Ridge which are tributaries to Rilda Creek. The undisturbed drainages report to Rilda Creek through a series of culverts passing beneath the facility. Stream buffer zones are maintained along Rilda Creek. Portions of the facilities are within one hundred (100) feet of Rilda Creek. Buffer signs have been installed along Rilda Creek to indicate the area which beyond no disturbance shall take place.

Water quality of Rilda Creek is protected from potential impacts associated with the Rilda Canyon Portal Facilities through a combination sediment control structures and revegetation (refer to R645-301-300 Biology Section for interim revegetation and Volume 11 Appendix Volume - Hydrology: Appendix B for Drainage and Sediment Control Plan).

## B. INCREASED SEDIMENT PRODUCTION TO RILDA CREEK

The site has been graded and paved to allow construction of the mine entries, facilities pad, and ancillary facilities on relatively flat areas. All grading and paving has been sloped away from the receiving stream and drains to a drop drain and culvert system that is diverted to a sediment basin which minimizes potential impacts. Site disturbance has been held to the minimum required while leaving as many trees and existing vegetation as feasible. All disturbed surfaces were revegetated immediately after completion of the construction phase (refer to Volume 11 Appendix Volume - Hydrology Section: Appendix B for details related to Alternative Sediment Control Areas (ASCA's).

Sediment control measures include practices carried out within and adjacent to the disturbed area. The sedimentation storage capacity of practices in and downstream from the disturbed areas will reflect the degree to which successful mining and reclamation techniques are applied to reduce erosion and control sediment. Sediment control measures consist of the utilization of proper mining and reclamation methods and sediment control practices, singly or in combination. Sediment control methods include, but are not limited to:

a. Retaining sediment within disturbed areas;
b. Diverting runoff away from disturbed areas;
c. Diverting runoff using protected channels or pipes through disturbed areas so as not to cause additional erosion;
d. Using straw dikes, riprap, check dams, mulches, vegetative sediment filters, dugout ponds and other measures that reduce overland flow velocities, reduce runoff volumes or trap sediment.
e. Paving.

## C. INCREASED SALINITY IN RILDA CREEK

PacifiCorp has developed a Drainage and Sediment Control Plan to protect the surface (Rilda Creek) and groundwater resources (Rilda Canyon Springs) in the area of the Rilda Canyon Portal Facilities which includes: the fan portal access, mine facilities, topsoil storage area. The Drainage and Sediment Plan will ensure protection of water resources by handling soil, overbuden and refuse from previous mining activities in such a manner to minimize discharge of pollutants to the hydrologic regime. Details of the Drainage and Sediment Control Plan is presented in Volume 11 Appendix Volume - Hydrology: Appendix B

During winter months snow removal will be required along the entire length of this road. As this is the responsibility of the Emery County Road Department, PacifiCorp may find the need to assist the road department by clearing snow from EC#306 by contracting this activity out. The contractor will use a deicing product as specified by Emery County on the county portion of the road to make the road safe for mine personnel and other local traffic. The deicing product will not be stored on-site but will be acquired off-site. No salt will be used within the disturbed areas of the Rilda Canyon Portal Facilities.

## D. INCREASED FLOW TO RILDA CREEK - MINE WATER DISCHARGE

~~All mine discharge water is routed through the underground reservoirs in the old workings or specialized sump areas and discharged at the Deer Creek Mine portals located in Deer Creek Canyon. Monitoring will be in accordance with UPDES permit standards and state and federal regulations.~~ Groundwater intercepted in the mine, including groundwater with potentially elevated iron from the Mill Fork Area (refer to discussion in Volume 12 Hydrology), will gravity flow to the Deer Creek portals (southern portion of the mine will discharge at the Deer Creek portals – Deer Canyon, Mill Fork Area will discharge at the Rilda Canyon 1st Right portals). Final sealing of the Deer Creek portals completed April 17, 2015 included installing a French drain system approved by MSHA and the BLM. PacifiCorp has developed a strategy to control the mine water discharge depending on water quality (concentration of Total Iron) to comply with the UPDES stipulations. Prior to the interception of the pyritic split in the Mill Fork Area, post mine gravity discharge water quality was predicted to be in compliance with UPDES permit limitations. PacifiCorp has revised the final reclamation plans to accommodate a buried pipeline from the Rilda Canyon 1st Right portals routing groundwater from the Mill Fork Area with potentially non-compliant water (elevated total iron concentrations exceeding 1 mg/L [UPDES limitation]) to the Huntington Power Plant Raw Water Pond.

## E. INTERFERENCE TO RILDA SPRINGS (QUALITY)

Site development related to the Rilda Canyon Portal Facilities is up gradient of the Rilda Canyon Springs. The site has been graded and paved to allow construction of the mine entries, facilities pad, and ancillary facilities on relatively flat areas. All grading and paving has been sloped away from the receiving stream/Rilda Canyon Springs and drains to a drop drain and culvert system that is diverted to a sediment basin minimizing potential impacts.

As stated previously, two separate drainage systems are provided at the Rilda Canyon portal facility site and are classified as "undisturbed" and "disturbed" collection systems. The "undisturbed" system collects overland runoff water above the portal site and from side slopes adjacent to the site and conveys it past the disturbed area into the natural channel of Rilda Canyon Creek. The "disturbed" collection system collects runoff from the portal and storage areas and conveys it to a temporary sedimentation basin east of the facilities pad. Flows that exceed the holding capacity of the sediment basin is diverted to the sediment pond.

Development plans for the Rilda Canyon Portal Facilities include construction of single sedimentation pond located at the eastern extent of the disturbed area (refer to R645-301-500 Engineering Section Map 500-2). Analysis utilized to determine the size and hydraulics related to the construction and operation of the sedimentation pond is included Volume 11 Appendix Volume - Hydrology: Appendix B: Drainage and Sediment Control Plan. The

sediment pond was strategically located below Rilda Canyon Springs to minimize the effects to the springs and collection system.

## F. ALTERATION TO THE BIOLOGIC COMMUNITIES

PacifiCorp developed a Drainage and Sediment Control Plan to protect the surface (Rilda Creek) and groundwater resources (Rilda Canyon Springs) in the area of the Rilda Canyon Portal Facilities. The Drainage and Sediment Plan will ensure protection of water resources by handling soil, overbuden and refuse from previous mining activities in such a manner to minimize discharge of pollutants to the hydrologic regime. Refer to Volume 11 Appendix Volume - Hydrology: Appendix B: Drainage and Sediment Control Plan for complete details related to development of the Rilda Canyon Portal Facilities. As stated previously, sediment control measures consist of the utilization of proper mining and reclamation methods and sediment control practices. Sediment control methods include, but are not limited to:

a. Retaining sediment within disturbed areas;
b. Diverting runoff away from disturbed areas;
c. Diverting runoff using protected channels or pipes through disturbed areas so as not to cause additional erosion;
d. Using straw dikes, riprap, check dams, mulches, vegetative sediment filters, dugout ponds and other measures that reduce overland flow velocities, reduce runoff volumes or trap sediment.
e. Paving.

PacifiCorp and governmental agencies have conducted several baseline studies of Rilda Creek to establish existing surface and groundwater characteristics. These studies included; quality and quantity monitoring of Rilda Creek, Rilda Canyon Springs, installation of groundwater wells and pump testing, geomorphology investigation and biological organisms assessments. Baseline data has been compared to hydrologic monitoring results to evaluate the effectiveness of the drainage and sediment control plan. The results indicate that there has been no conclusive evidence that shows construction activities of the Rilda Portal facilities having a negative impact on the hydrologic regime of Rilda Creek. The results of the biological assessment study are included in Volume 11 Appendix Volume - Biology: Appendix C.

Mitigation and Control Plans

To minimize potential effects to Rilda Creek, all mine discharge water will be routed ~~through the underground reservoirs in the old workings or specialized sump areas and discharged at the Deer Creek Mine portals located in Deer Creek Canyon~~ as explained above in R645-301-500 Engineering. Monitoring will be in accordance with UPDES permit standards and state and federal regulations. (refer to Volume 9 - Hydrologic Section: Appendix B for UPDES permit information.) As described previously and in the Drainage and Sediment Control Plan (refer to Volume 11 Appendix Volume - Hydrology: Appendix B) the site development in Rilda

Canyon has been designed to minimize the potential effects to the hydrologic balance. Baseline studies have been conducted to assess the quality, quantity, geomorphology and biologic resources of Rilda Canyon.

The effects of the mining operation on the surface water system will continue to be analyzed through the surface water monitoring plan described below. In the event that monitoring shows that the surface water system is being adversely affected by mining activities, additional steps will be taken to rectify said impacts in cooperation with local, state, and federal regulatory agencies.

Surface Monitoring Plan

A hydrologic surface monitoring program, initiated in 1979 (sites in Meetinghouse and Rilda canyons were added in 1986 and 1989, respectively, [Mill Fork Canyon was monitored by Mountain Coal Company from 1984-95 and was included in PacifiCorp's hydrologic monitoring in 1997]), has been underway at each of the surface monitoring stations shown on Map HM-1 (refer to Volume 9 - Hydrologic Section). An additional surface site was added in 1997 in Rilda Canyon in the right fork above the mainline development to monitor the surface/groundwater relationship of the right fork. Stations were established to monitor water quality and quantity above and below the mine permit areas. The parameters for laboratory analyses are those established by DOGM in "Guidelines for Surface Water Quality" (refer to Volume 9 - Hydrologic Section: Appendix A). Once baseline data have been collected (two-year period), the surface sites described in the hydrologic monitoring schedule in Appendix A will continue to be monitored quarterly (when accessible) throughout the operational phase of the mine. The quarterly monitoring during the mine operational phase will include flow and quality to delineate seasonal variation and assess changes in water quality.

Future data may show that modifications of the monitoring schedule are justified. Any changes to the monitoring schedule (frequency or parameters) will be made only with the approval of DOGM. Results of all water quality data will be submitted to that agency quarterly, with an annual summary.

Post-mining monitoring of surface water will continue at representative stations determined with the aid and approval of DOGM. Representative surface water stations will be monitored biannually during high and low flow conditions. Monitoring will continue until the release of the reclamation bond or until an earlier date to be determined after appropriate consultation with local, state, and federal agencies.

Groundwater System

PacifiCorp has collected an extensive database of information pertaining to the groundwater quality and quantities of the East Mountain region and adjacent areas. Included in the database

is long-term quality and flow information both for springs and for groundwater intercepted by mining.

Detailed descriptions of the regional and area groundwater resources have been presented in previous sections and will not be duplicated here (refer to R645-301-722). In general, the majority of all natural groundwater discharge points located on the East Mountain property is in the form of seeps and springs. PacifiCorp has mapped approximately eighty (80) springs ranging in discharge from <1 gpm to as high as 450 gpm (refer to Volume 9 - Hydrologic Section: Map HM-4).

The USGS has conducted extensive studies to determine the regional groundwater system for the central Wasatch Plateau Coal Field. The studies indicate a regional aquifer exists in the coal-bearing sequence of the Blackhawk and the underlying Star Point Sandstone formations. The studies have also concluded that several isolated or perched aquifers existed above the Blackhawk-Starpoint aquifer. PacifiCorp agrees with conclusions of the USGS studies concerning the perched aquifers above the coal-bearing sequence of the Blackhawk Formation but has some reservations about the significance of the Blackhawk-Starpoint aquifer which will be discussed below. The majority of the groundwater is discharged from the perched aquifers which occur along the base of the North Horn Formation in the form of seeps and springs (refer to Volume 9 - Hydrologic Section: Map HM-4, Figure HF-6, and Table HT-1). Several other perched aquifers exist mainly along the formational contacts with the North Horn Formation, including the upper contact with the Flagstaff Limestone and the lower contact with the Price River Formation.

The majority of the groundwater recharge on East Mountain comes from the winter snowpack which melts and infiltrates into the surface of East Mountain. The water flows down vertical fractures which intersect sandstone channel systems in the North Horn Formation. The majority of the groundwater reaching this point intersects the surface in springs located in the North Horn Formation. Very little recharge intersects the upper Price River Formation and Castlegate Sandstone; consequently, they are not water saturated where intersected in the numerous drill holes penetrating those units. As discussed earlier in the Groundwater Section, recharge to the North Rilda area is very limited due to the topographic configuration of the region (refer to Volume 9 Map HM-9).

The hydrogeologic characteristics of the coal-bearing Blackhawk and overlying formations effectively limit the extent of impacts to the hydrologic system. Impacts to water quality are negligible and may be slightly beneficial. As discussed previously, two separate aquifers-water bearing zones occur on the East Mountain property: 1) perched aquifers associated mainly with the North Horn Formation, and 2) Blackhawk-Starpoint regional aquifer, which exhibits limited potential as a property wide, water saturated zone. The following hydrologic balance section will segregate the two zones and describe the significance and possible impacts to each zone.

<u>Hydrologic Balance - Groundwater</u>

Mining within the North Rilda (all mine in the Deer Creek Mine including the North Rilda Area ceased on January 7, 2015) area will have negligible impact on the regional hydrologic balance, but there could be some possible local impact. This section discusses the possible mining-related impact on the hydrologic balance due to:

A. Subsidence - Perched Aquifer Systems,
B. Mining in the Rilda Canyon Area - NEWUSSD Springs, and
C. Interception of Groundwater by Mine Workings
D. Mining Below the Right Fork of Rilda Canyon
E. Mill Fork ~~State Lease ML-48258~~ Permit Area (Federal Lease UTU-84554) Access (reverted to the BLM on August 1, 2011 and designated as federal lease UTU-88554) (Hiawatha Seam)

## A. SUBSIDENCE: PERCHED AQUIFER SYSTEMS ABOVE THE MINE HORIZON

As discussed earlier, most of the groundwater in the permit and adjacent areas discharges in the form of seeps and springs. No springs are undermined in the North Rilda area. Only two springs are within the North Rilda mine plan area, 80-50 located in Section 29 and the Rilda Canyon Springs located in Section 28 (refer to Volume 9 Map HM-9 for the location of the springs and Volume 9 - Hydrologic Section of the Deer Creek MRP: Appendix A for sampling sites and monitoring schedule). A Spring Geologic Conditions Inventory sheet has been completed for each spring inventoried on the East Mountain Property and can be found in Volume 9 - Hydrologic Support Information.

PacifiCorp has conducted a series of exploration programs to identify the geologic and hydrologic characteristics of the North Rilda area including the crossing of the right fork of Rilda Canyon (refer to Volume 9 Map HM-10). A series of six drill holes were completed in 1997 to document coal seam characteristics, structural geology and hydrologic conditions. Drilling was conducted on approximately 250 foot centers across the projected Mill Fork Graben from previously completed drill holes EM-158 and EM-56. No structural discontinuities were identified during drilling. Groundwater encountered during drilling was restricted to minor quantities from the alluvium/colluvial fill (estimated at 2 - 5 GPM) near the alluvial\bedrock interface. Mainline development below the Right Fork of Rilda Canyon did not intercept any groundwater, and has remained "dry" since initial development.

To identify any mining related impacts PacifiCorp monitors a significant number of springs which have been undermined or will be undermined within the next five years (refer to Volume 9 - Hydrologic Section: Hydrologic Monitoring Schedule and Map HM-5). A field verification meeting will be held each year with the government agencies involved to determine if changes in the springs monitored are required. Each year in the annual Hydrologic Monitoring Report spring flow rates are compared to East Mountain climatology

as to how closely spring discharge follows local annual precipitation or to verify any mining related impacts.

Data collected by PacifiCorp continues to show the relationship between the variation in groundwater discharge quantity and precipitation. Hydrologic monitoring completed on the East Mountain property has failed to identify any changes in the quantity or quality of groundwater discharge from the springs which have been undermined. The U.S. Bureau of Mines completed an independent study (1994) of the mining impacts on the Hydrology of East Mountain (Response of Springs to Longwall Coal Mining at the Deer Creek and Cottonwood Mines, Wasatch Plateau, UT., Informational Circular 9405, U.S. Bureau of Mines). PacifiCorp personnel collected the data in this study from springs determined to represent hydrologic conditions on East Mountain. This determination was made by an ad hoc committtee including representatives of DOGM and the Forest Service. This study failed to find any springs that have been impacted by mining (refer to Volume 11 Appendix Volume - Engineering: Appendix A).

## B. MINING IN THE RILDA CANYON AREA-NEWUSSD SPRINGS

As discussed in R645-301-721, North Emery Water Users Special Service District (NEWUSSD) collection system, a major concern to PacifiCorp, is located immediately below the mining activities in Rilda Canyon.

PacifiCorp contracted Hansen, Allen & Luce (HA&L) to conduct a hydrologic test in Rilda Canyon. (Refer to Volume 9 - Hydrologic Support Information, Rilda Canyon Pump Test.) The findings from this test were then compared to the Wellhead/Drinking Water Source Protection criteria to determine the appropriate mitigation measures. The local groundwater system in the vicinity of the NEWUSSD springs consists of an unconfined alluvial valley fill aquifer as well as bedrock and fracture systems. Resistivity data provided by PacifiCorp indicate that the total maximum depth of alluvium ranges from 50 to 73 feet at the three locations where cross sections were taken. The locations of the resistivity cross sections within Rilda Canyon are shown on Map HM-7 (refer to Volume 9 - Hydrologic Section). The width of the unconfined aquifer varies due to the influence of side drainages which also feed the area.

Water moving throughout Rilda Canyon appears to originate mainly from the alluvial deposits associated with the right and left forks of Rilda Canyon. Earlier studies indicated two other potential sources; an east-west trending fault which is believed to lie to the north of the canyon floor, and the third is potentially through a north-south trending fault which bisects the canyon just west of the NEWUSSD spring collection system. Extensive surface exploration conducted in Rilda and Mill Fork canyons parallel to the trend have failed to identify structural features which would contribute to the groundwater system.

Springs within Rilda Canyon are believed to indicate and verify the locations of changes in stratigraphy. Examples of local stratigraphy and their impact on hydrology have been

verified historically through stream and spring flow observations. The canyon drainage west (or above) the interface with the upper contact of the Star Point Sandstone is generally a discharging stream section. When alluvial waters come in contact with the more impermeable members of the upper Star Point Sandstone formation, they are often forced to the surface, creating springs. Local NEWUSSD springs confirm a recharging stream section. When these more impermeable formations are crossed, the stream once more becomes a losing stream until subsurface waters again come in contact with the more impermeable members of the Star Point Sandstone and underlying Mancos Shale formations. Some sections of the stream within Rilda Canyon gain flow, thereby evidencing the locations where subsurface water is forced to the surface by the tighter formations.

Data collected during and following the pump test of Well P-7 were used to provide estimates of local valley fill aquifer characteristics. For these analyses, data from both pumped P-7 and from observation Well P-6 during both the drawdown and recovery portions of the test were used.

Aquifer transmissivities as determined by the methods described in R645-301-721 range from a low of 6,100 gpd/ft to a high of 35,900 gpd/ft. As a summary of values determined, the following table is provided. The table contains a column identified as "Credibility of Results" which is intended to be a guide to the numbers given. A high credibility rating indicates that the method basically accounts for conditions believed to exist within Rilda Canyon. A medium credibility indicates that, for these conditions, the solution does not appear to fully account for identified field conditions. As outlined in the table, it is believed that long-term transmissivities are on the order of 20,000 gpd/ft and short-term transmissivities are on the order of 35,000 gpd/ft. The variation in results appears to be due to boundary effects created by the canyon walls. If used for further analyses, the short-term transmissivity estimates should govern.

**SUMMARY OF CALCULATED TRANSMISSIVITIES**

| Analysis Used | Data Type | Well Data Used | Estimated Transmissivity (gpd/ft) | | Credibility of Results | | |
|---|---|---|---|---|---|---|---|
| | | | Short-Term | Long-Term | High | Medium | Low |
| Cooper-Jacob | Drawdown | P-7 | 35650 | 17,550-21,000 | ✖ | | |
| Cooper-Jacob | Drawdown | P-6 | | 23600 | ✖ | | |
| Cooper-Jacob | Recovery | P-7 | 35900 | 13700 | ✖ | ✖ | |
| Theis | Drawdown | P-7 | 28450 | 17900 | ✖ | ✖ | |
| Neuman | Drawdown | P-7 | 13150 | 6100 | | | ✖ |

Groundwater Quantity Based on Pump Test Results

An approximation of the total groundwater flow moving eastward down Rilda Canyon was made using data collected from the resistivity studies completed by PacifiCorp and from data collected at local area wells. The flow approximation was made by applying the general flow equation Q=VA. The area of groundwater flow was determined using the inferred cross sectional area identified in the resistivity study as "R-3" (refer to Volume 9 - Hydrologic Section: Map HM-7) for the canyon adjacent to P-7. The velocity of groundwater movement was determined from the relationship between hydraulic permeability and groundwater gradient, V=ki. Permeability was determined from the estimate for short-term transmissivity obtained using the methods discussed earlier. It was felt that under flow conditions uninfluenced by man, the short-term transmissivity is most representative of natural conditions. Using these relationships, the estimated amount of groundwater moving down Rilda Canyon was determined for both high and low flow conditions.

Based on historic data, low flow conditions were found to dominate during the period of the 1990 pump test; however, it has been noted by PacifiCorp employees that a rise in water

level occurs within Rilda Canyon wells each year as the groundwater aquifer responds to snow melt runoff. Historical data reproduced in Figure HF-25 for wells 1 through 5 shows seasonal and annual water level fluctuations (refer to Volume 9 - Hydrologic Section). Note the relative change in water level between wells. Little overall variation is noted except for P-3 which shows changes over time totaling approximately thirteen to fourteen (13-14) feet. Changes recorded in P-3 are likely greater than those indicated by Figure HF-25 because P-3 is only thirty-eight (38) feet deep and water levels have been known to drop below the bottom of the well. A comparison of water level variations between P-3 and adjacent P-7 indicates that the total water level fluctuation may be as much as twenty-two (22) feet, (actual data collected from 1990 through 1996 reveals the maximum rise in water level of approximately twenty eight [28] feet, refer to Annual Hydrologic Monitoring Reports).

*Low Flow*. The first condition analyzed was based upon the relatively low flow condition found in November 1990. Using the relationship Q=VA as discussed above, the total alluvial valley aquifer flow in the area of P-7 was estimated to be approximately 151 gpm. Subtracting an average pumped Volume of 16.4 gpm from P-7, an estimated flow of 135 gpm bypassed P-7 and continued downstream toward the NEWUSSD spring collection system. Impacts noted upon the NEWUSSD spring system as a result of pumping P-7 appear to be confined to a reduction in flow from the springs on the order of ten percent. Before pumping began, total combined spring flows were approximately 85 gpm. During the later stages of pumping, just prior to termination of the test, spring flows had reduced to approximately 77.5 gpm, indicating a reduction in flow of 7.5 gpm during the pump test. Additional reductions in flow will probably occur as flows continue to stabilize.

As stated above, not all the water moving down Rilda Canyon in the alluvial valley aquifer was collected through pumping of P-7. In order to obtain an estimate of the total possible impact should the entire alluvial aquifer be eliminated as a source of water, a straight line extrapolation was made of pumped flows versus decreased spring flows. A straight line extrapolation of the data in this fashion should be considered an approximation only, not an accurate method of determining precise impacts. At an average pump rate of 16.4 gpm at P-7, NEWUSSD spring flows decreased by approximately ten percent. Assuming all alluvial valley recharge bypassing P-7 was eliminated as a potential source of water, the estimated impact to the NEWUSSD springs (using the straight line extrapolation method) could be approximately 69 gpm. The estimated spring impact based in percent would then be 69 gpm over an uninfluenced flow rate of 85 gpm or eighty-one percent. Using this methodology, the remaining nineteen percent of the flow contributing to the NEWUSSD springs appears to be coming from other sources.

*High Flow*. High flow conditions were estimated by adding to the 151 gpm base flow calculated for the November 1990 period the additional flow which would move down the canyon given a twenty-two (22) foot rise in water level which would occur during a wet year (actual data collected from 1990 through 1996 reveals the maximum rise in water level of approximately twenty eight [28] feet, refer to Annual Hydrologic Monitoring Reports). The additional flow projected to occur during wet years was estimated by 1) measuring the cross sectional area which would result from a twenty-two (22) foot rise in the water table and 2)

by applying the flow relationship Q=kiA. As indicated earlier, the water table gradient (I) used in this equation was found to be greater in 1987 than during the November 1990 test. Based on these assumptions, increased water levels measured during the high flow period of 1987 resulted in an estimated alluvial valley aquifer flow rate of 372 gpm.

Data shows that total NEWUSSD spring flow during high flow periods is typically on the order of 400 gpm (refer to Volume 9 - Hydrologic Section: Figure HF-11). If all alluvial flow entered the springs, then the total impact to the springs resulting from the loss of said flow would be on the order of ninety-three percent (372 gpm/400 gpm). An alternate method of approximating the potential impact is through the use of the same impact ratio as was determined from the low flow pump test completed on P-7. Using this method, the total expected decrease in spring flows during high flow periods would be approximately 170 gpm, or a forty-three percent decrease (170 gpm expected decrease/400 gpm total spring flow).

Wellhead/Drinking Water Source Protection

The State of Utah has been required by the federal government under the Federal Safe Drinking Water Act to establish a Wellhead Protection Program to protect groundwaters that supply drinking water to public water supply systems. Included in this classification is the NEWUSSD spring collection system within Rilda Canyon. During the time frame of the NEWUSSD springs investiagation, (1989-90), the wellhead protection rules were in draft form and were being considered for adoption by the Utah Safe Drinking Water Committee. A brief summary of the proposed draft rules is included as Table HT-11 (refer to Volume 9 - Hydrologic Section). The wellhead protection rules were adopted by the Utah Safe Drinking Water Committee and referred to as the *"DRINKING WATER SOURCE PROTECTION"* rules, R309-113, on July 26, 1993. Delineation of protection zones and management areas remained unchanged from the draft guidelines listed in Table HT-11 (refer to Volume 9 - Hydrologic Section of the Deer Creek MRP).

Based upon information contained in the table, it appears that the property included within Zone 1, a 100-foot radius around the NEWUSSD spring collection system, should be owned by the water supplier and be fenced. In addition, Zone 1 should be protected against anthropogenic sources of contamination. The "Master List of Potential Anthropogenic Sources of Contamination in Utah" as given in R449-113-8.1 includes coal companies within the designation, "Concrete, asphalt, tar and coal companies." Note the designation difference between new and existing sources in the table just discussed in that "new sources" indicates a definitive action whereas "existing sources" indicates that the action "should" be done. This distinction implies that existing facilities will be treated with more latitude than new facilities. It appears that this wording has been added to take into account the many possible configurations of public water supplies wherein little can be done to modify or correct long standing conditions.

Because the area has a characteristically high groundwater velocity, the criteria identified by zones 2 and 3 in the table do not apply. For example, a 250-day travel time for water found

within the alluvial aquifer (using a permeability of 167 ft/day as estimated by the pump test results) would be 7.9 miles. Since the criteria require that the zone not extend beyond the natural hydrologic boundaries, the zone is reduced to the limit or extent of the canyon in which the NEWUSSD springs are located. Using this criterion, the north and south limits would include the land to the ridgeline of Rilda Canyon. The west boundary line would be placed at a two mile radius from the NEWUSSD spring collection system, and the east boundary would be located along the contour line 100 feet lower in elevation from the groundwater source. A map showing the approximate groundwater protection zone boundary as defined by the preliminary draft regulation is presented in Figure HF-41 (refer to Volume 9 - Hydrologic Section of the Deer Creek MRP). It should be noted that this boundary is only an approximation of the two mile radial zone as defined in the regulation, and refinement will be needed as the regulation is further defined.

Spring Impacts

Impacts noted on NEWUSSD springs during the pump test completed in November 1990 were found to be in the range of approximately ten percent. The impacts are based upon the pump test, water level data collected from P-7, other local piezometers, and spring discharge data. Continued pumping beyond the length of the test completed will likely result in additional declines beyond those noted during the seven-day test. The impacts to the springs based upon varying local conditions and flow patterns have been reviewed as a result of this reporting effort. Some of the changes which could potentially occur to the local groundwater system, thereby impacting local springs, are discussed below.

*Total Elimination of Alluvial Flow*. In the event that all alluvial aquifer flow from the west up Rilda Canyon was eliminated as a spring recharge source, impacts to the NEWUSSD springs may be more severe than forty-two of the ninety-three percent estimate made through the use of pumping test data. Impacts to the NEWUSSD springs would be most severe in the event that local alluvial water provides the majority of the head driving the spring collection system during peak periods. Based on the large fluctuations noted in Well P-3, (replaced with P-7), this appears to be the case. Other flows, including those related to faults and fractures may provide a relatively constant base flow to the spring collection system; however, the majority of impact potential to the springs at this time appears to be related to alluvial recharge.

*Elimination of Other Sources*. Other sources of spring recharge water include fractures as well as alluvial flow in the side canyon located adjacent to the NEWUSSD springs to the south. Should recharge waters feeding the fractures originate from areas proposed to be mined and mining diverts the water from its natural course, impacts to the springs could be cumulative with those resulting from a reduction of alluvial flow as discussed above. Obviously, under these conditions the impacts will be greater than those estimated herein based upon alluvial flow near P-7 alone.

With the exception of P-3, little seasonal variation was noted in the water level within the wells shown in Figure HF-25 (refer to Volume 9 - Hydrologic Section of the Deer

Creek MRP). The variation noted in P-3 is insufficient; however, to account for the total flow variation measured in the NEWUSSD springs between high and low flow years. High and low flow alluvial recharge from the main canyon area was estimated earlier to be approximately 372 and 151 gpm, respectively. The increase in alluvial recharge is then the difference between the two values, which is 221 gpm; however, the increase in spring discharge between high and low flows has been reported to be approximately 320 gpm, thirty-one percent higher than the total alluvial flow increase originating from the main canyon area. This may indicate that the remaining portion of NEWUSSD spring flows come from either other "non alluvial" sources or additional alluvial flow from the south tributary.

*Overall Impact Potential*. PacifiCorp conducted a pump test project in Rilda Canyon to determine the groundwater characteristics and source. As documented by the pump test, the major source of groundwater to the Rilda Canyon Springs is from the alluvial deposits (refer to Volume 9 - Hydrologic Support Information, Rilda Canyon Pump Test). The majority of the recharge to the alluvial deposits is from the right fork of Rilda Canyon. Recharge to the alluvial deposits of Rilda Canyon occurs above the Castlegate Sandstone to the west of the mine plan boundary (refer to Volume 9 Map HM-9). Little impact to spring flow may actually occur unless geologic conditions change as a result of mining. Subsidence could potentially result in the development of cracking or fracturing of the subsurface geologic stratum above the mine workings. Local recharge crossing these hypothetically subsided areas could be lost from the spring recharge system, thereby directly affecting local spring flows. Mining below the right fork of the Rilda Canyon drainage will consist of first mining only (main entry development) which will minimize the potential impacts related to subsidence (refer to Volume 9 Map HM-10 and the approved Deer Creek $R_2$ $P_2$ [Refer to Volume 5, Maps 3-6 and 3-7]). Mitigation for the loss of spring flow has been based on the elimination of the alluvial recharge which is unlikely to occur based upon the projected extent of the mine compared to the recharge area. Mitigation efforts based on the worst case scenario have been outlined in the following section.

Mitigation

Through intensive negotiations and investigations of possible alternatives, PacifiCorp and NEWUSSD agreed upon mitigation plan on August 12, 1993. The plan included construction of a slow sand water treatment plant with a 0.5 million gallon storage reservoir (the mitigation alternative information is found in Appendix G of Volume 9 - Hydrologic Section). Construction of the plant and reservoir began in March of 1994 and was completed in November 1994. The plant was brought on-line in November 1994 utilizing Rilda Springs as one of the sources of water. PacifiCorp will continue monitoring springs in Rilda Canyon for potential mining related impacts (refer to Volume 9 - Hydrologic Section: Appendix A).

To alleviate concerns with the Rilda Canyon Portal Facilities, PacifiCorp and North Emery Water Special Service District (NEWSSD) investigated re-locating the Rilda Canyon Springs collection system from their current location to the mouth of the right fork of Rilda

Canyon above the portal facilities. The proposed collection system study is shown on Engineering Section Map 500-2. PacifiCorp submitted an investigation plan to the Division outlining hydrologic objectives of the site investigation (refer to Volume 11 Appendix Volume - Hydrology: Appendix D). PacifiCorp has completed the following project phases of the investigation:

1. Drilling a series of hydrologic monitoring wells,
2. Well development and groundwater sampling,
3. Aquifer testing.

Results of the study and field work found the project to be ineffective and economically unfeasible. However, PacifiCorp continued to cooperate with NEWUSSD to develop a cost effective, long term mitigation plan that would offset any loss of spring flow that could potentially be impacted by underground mining activities.

In 2008, PacifiCorp partnered with NEWUSSD to develop an additional water source of Elk Springs and a related spring labeled as 89-61. This complex is located on East Mountain within the main fork of Meetinghouse Canyon (refer to Volume 11 Appendix Volume - Hydrology: Appendix E). The development of these springs as a drinking water source could provide an additional 250-500 gallons per minute to the NEWUSSD culinary system.

Standard source development structures are used to collect water and discharge into a transmission pipeline. The transmission pipeline is routed underground to the steep, vertical decline in the left fork of Meetinghouse Canyon. A horizontal directional borehole was developed 700 vertical feet through the Castlegate Sandstone outcrop to the canyon floor. A 6 inch transmission pipeline is routed through this borehole and connects to a lower trenched pipeline segment. This lower pipeline route follows a previously disturbed transmission power line corridor to the mouth of the canyon and into the slow sand treatment plant operated by the NEWUSSD. The project allows the NEWUSSD to meet drinking water standards, protect public health and provides the necessary culinary services for the current and projected culinary water use within its service area. This project was completed in the spring of 2009. Additional information needed for this project can be gained by contacting the NEWUSSD.

## C. INTERCEPTION OF GROUNDWATER BY MINE WORKINGS

As previously discussed in this section, the Blackhawk Formation consists of interbedded layers of sandstone and mudstone separated by various minable and non-minable coal seams. The sandstone beds-fluvial channel systems are generally massive while the mudstone layers are fine textured and have a tendency to swell when wet and decompose into an impervious clay. Because of the aquiclude formed by mudstone layers in the North Horn Formation and topography, recharge to the Blackhawk Formation is limited, even along major fault systems. Due to the lithologic characteristics of the Blackhawk, both vertical and horizontal migration is constricted.

The interception of groundwater varies and is dependent on several factors. One of the most significant is that when the mine enters previously un-mined country, a significant amount of water is liberated. In virtually all cases the amount of water which flows into the mine exceeds the recharge and, in time, the water inflow decreases in volume. If new areas are not mined, the discharge from the mine will decrease accordingly. As reported in the annual Hydrologic Monitoring reports, flow rates for individual areas including fault zones normally decrease to less than ten percent of the initial flow rate.

Long-term monitoring of water producing zones in both Deer Creek and Wilberg/Cottonwood mines has established that once base flow has been reached, the flow is consistent over time. Monitoring has not indicated any seasonal or yearly variations (refer to the Annual Hydrologic Monitoring reports for in-mine long-term flow information).

As pointed out by Theis (1957), water discharged from a well or, in this case, underground mines, must be balanced by 1) an increase in recharge to the groundwater system, 2) a decrease in natural discharge from the system, or 3) a decrease of groundwater in storage, or by a combination of all of these. As hydrologic studies have shown and monitoring of intercepted groundwater has verified, recharge into the underground workings is limited even in areas of faults and fractures. Based on the hydrologic characteristics of the Blackhawk and the underlying Star Point Sandstone (low porosity and hydraulic conductivities) and data from surface hydrologic monitoring, decrease in the natural discharge of the system is considered to be only a minor factor; therefore, groundwater intercepted in the mine plan area is concluded to be from storage. One factor which verifies this conclusion is rapid dewatering of intercepted groundwater with no apparent change in the surface hydrological system. As the USGS pointed out in Open File 81-539 and monitoring by PacifiCorp has shown, the majority of surface flow is due to the runoff from the winter snowpack and not from groundwater recharge.

## D. MINING BELOW the RIGHT FORK of RILDA CANYON

A portion of the Right Fork area of Rilda Canyon lies within the North Rilda Canyon Permit Application area of the Deer Creek Mine. Due to the environmental sensitivity of the Right Fork area (specifically the sub-surface hydrologic alluvial system and associated surface riparian vegetation zone), a complete analysis of a "no-subsidence / long term stability" design of the 5$^{th}$ North Mains development within the area of the right fork of North Rilda Canyon has been conducted addressing the long term ground stability and subsidence protection of the area with regards to mining. All pre-mining and post-mining conditions have been evaluated based on the best geologic and engineering information currently available (refer to Volume 11 Appendix Volume - Engineering: Appendix A).

The 4th North Mains consists of a 5-entry development section, bearing northwest from the Deer Creek 10th West Mains. Initial location of the 10th West/4th North intersection was based on the following:

(1) Existing Blind Canyon Seam conditions encountered with regard to 10th West Mains development.
(2) Proximity to the projection of the Mill Fork Fault Graben.
(3) Most practical access route to the North Rilda - Blind Canyon and Hiawatha coal reserves, across the North Rilda Canyon Forks area.

A complete analysis of the to location and long term ground stability of the 4th North / 10th West Mains and the Left Fork of Rilda Canyon was prepared and submitted by PacifiCorp to the BLM on November 15, 1996. Approval to proceed with relocation and development of the 4th North Mains was given by the BLM (per letter) February 13, 1997.

With regard to PacifiCorp's North Rilda Area Permit Application, the 4$^{th}$ North Mains were originally projected to be developed northwest (approximately 3000 feet), from the 4th North / 10th West Mains intersection. The mainline development, designated as 5$^{th}$ North, then changed course to a northeast bearing, with development proceeding under the Right Fork area of Rilda Canyon. Selection of the Right Fork stream crossing area was based on the results of an extensive surface exploration program conducted in the Right Fork of Rilda Canyon (refer to Volume 9 Maps HM-9, HM-10). A series of six drill holes were completed in 1997 to document coal seam characteristics, structural geology and hydrologic conditions. Drilling was conducted on approximately 250 foot centers across the projected Mill Fork Graben from previously completed drill holes EM-158 and EM-56. No structural discontinuities were identified during drilling. Groundwater encountered during drilling was restricted to minor quantities from the alluvium/colluvial fill (estimated at 2 - 5 GPM) near the alluvial/bedrock interface. Based on the results of the 1997 surface exploration conducted in the Right Fork of Rilda Canyon, a meeting was held in October 1997 with DOGM, USFS, and BLM to discuss the re-location of the 4/5$^{th}$ North intersection to maximize the overburden in the Right Fork stream crossing. The 5$^{th}$ North Mains were re-located approximately 800 feet west of the original projection, increasing the overburden from 120 to approximately 200 feet. A fault system referred to as the Mill Fork Canyon Graben is projected to intersect the western portion of Federal Coal Lease U-06039 (refer to Volume 9 Map HM-9). The Mill Fork Canyon Graben was intersected and crossed north of the North Rilda Area mine plan extension in the Beaver Creek No. 4 Mine and consisted of a series of faults with a total displacement of approximately thirty (30) feet. Beaver Creek No. 4 Mine was a relatively dry mine with only few isolated roof drippers associated with the Mill Fork Fault system. In reviewing the exploration data and in-mine information from the development of the 5$^{th}$ North Mains, it appears that the eastern fault of the Mill Fork Graben diminishes to the south from where it was intercepted in the Beaver Creek No. 4 Mine located north of Mill Fork Canyon. Deer Creek mine workings have intercepted a small fault of 7' displacement, down on the west side in the Mill Fork Access mains at XC-29, followed by a very small displacement (<1') fault, upthrown on the west side. This small fault “graben,” though not in line with the projected fault zone, is almost surely related to it. This fault zone does not appear in any surface outcrops. No groundwater was associated with either fault. If mining intersects faulting related to the Mill Fork Graben during development, permanent seals will be installed to control groundwater if present.

During the development of the 5th North Mains, PacifiCorp monitored intercepted groundwater from all sources including roof drippers and groundwater inflow from floor of the mine as specified in R645-301-200: Groundwater Monitoring. Surface water/groundwater interrelationships were monitored above and below the mine crossing as specified in R645-301-200: Surface Water Monitoring. Mainline development below the Right Fork of Rilda Canyon did not intercept any groundwater, and has remained "dry" since initial development.

**E. MILL FORK ~~STATE LEASE ML-48258~~ (FEDERAL LEASE UTU-84554) ACCESS (HIAWATHA SEAM)**

*Mill Fork ~~State Lease ML-48258~~ Permit Area (Federal Lease UTU-84554) Access:* Based on data acquired through surface coal exploration programs, ~~Energy West~~ PacifiCorp developed a mine plan to access the Mill Fork ~~State Lease~~ Permit Area with a set of 6-entry mains driven on a northwest bearing from the 6th North Mains. Mining within the Mill Fork Access corridor will be restricted to mainline development. To ensure long term stability, pillars will not be removed.

As stated earlier, in Structural Hydrologic Features, a fault system referred to as the Mill Fork Canyon Graben is projected to intersect the western portion of Federal Coal Lease U-06039 (refer to Volume 9 Map HM-9). The Mill Fork Canyon Graben was intersected and crossed to the north of the North Rilda Area mine plan extension in the Beaver Creek No. 4 Mine and consisted of series of faults with a total displacement of approximately thirty (30) feet. PacifiCorp has conducted extensive exploration programs to delineate the Mill Fork Graben including a series of close spaced drill holes in the Right Fork of Rilda Canyon. Drilling was conducted on approximately 250 foot centers across the projected Mill Fork Graben from previously completed drill holes EM-158 and EM-56. No structural discontinuities were identified during drilling. Groundwater encountered during drilling was restricted to minor quantities from the alluvial/colluvial fill (estimated at 2 - 5 GPM) near the alluvial/bedrock interface. Based on the results of the 1997 surface exploration conducted in the Right Fork of Rilda Canyon, a meeting was held in October 1997 with DOGM, USFS, and BLM to discuss the re-location of the 4/5th North intersection to maximize the overburden at the Right Fork stream crossing. The 5th North Mains were re-located approximately 800 feet west of the original projection, increasing the overburden from 120 to approximately 200 feet. In reviewing the exploration data and in-mine information from the development of the 5th North Mains, it appears that the eastern fault of the Mill Fork Graben diminishes to the south from where it was intercepted in the Beaver Creek No. 4 Mine located north of Mill Fork Canyon (refer to Volume 9 map HM-9).

Deer Creek mine workings have intercepted a small fault of 7' displacement, down on the west side in the Mill Fork Access mains at XC-29, followed by a very small displacement (<1') fault, upthrown on the west side. This small fault “graben,” though not in line with the projected fault zone, is almost surely related to it. This fault zone does not appear in any surface outcrops. No groundwater was associated with either fault.

Hydrologic studies conducted in association with the coal leasing to the north and northwest of the North Rilda Area identified the Mill Fork Graben as a potential source of recharge for the Little Bear Spring. PacifiCorp participated in these studies and provided funding for the second phase.

Little Bear Spring is a large spring (average flow of approximately 300 gpm) which issues from the lowest member of the Star Point Sandstone (Panther Member) located approximately two miles to the northeast of the North Rilda Area in Section 9, Township 16 South, Range 7 East. The spring was developed in 1960 by Huntington City and is currently maintained by Castle Valley Special Service District (CVSSD). Little Bear Spring provides sixty five (65) percent of the culinary water for the cities of Huntington, Cleveland and Elmo.

As stated in the Mill Fork Environmental Assessment (EA) competed in 1997, Little Bear Spring flows continuously, with average monthly discharge ranging from two hundred (200) to four hundred forty (440) gpm (CVSSD, 1997). Flow varies seasonally, with a typical increase of twenty (20) to forty (40) percent in response to spring runoff. The lowest average monthly baseflow recently measured was one hundred ninety eight (198) gpm in April 1995. Isotopic analyses performed to evaluate the age of water indicated that the spring discharges modern water, and is similar in composition to water in both Crandall and Huntington Creeks (Mayo and Associates, 1997). Further chemical analyses show that water from Little Bear Spring is very similar to surface water in both Little Bear and Huntington Creeks. Water quality in the spring is good, requiring only chlorine treatment before it is suitable for consumptive use.

Based on previous reports and field observations, the spring emanates from western fault of the Mill Fork graben. The graben is approximately one thousand (1,000) feet wide and trends from the southwest to the northeast at approximately north thirty (30) degrees east. Much of the geologic and hydrologic detail concerning the fault system was derived from the mining history of the Beaver Creek #4 Mine located in Mill Fork Canyon. Mining in the #4 Mine encountered the eastern fault (down thrown approximately thirty (30) feet on the west) of a small graben as entries were driven northwest from the portals in Mill Fork Canyon. Rock slopes were developed through the fault system down to the coal seam level. Mining proceeded across the graben to the western up thrown fault (up thrown approximately twenty nine (29) feet on the west). A second set of rock slopes were developed to access coal reserves to the west of the graben. Coal reserves diminished rapidly to the west and the mine was eventually closed and reclaimed. Mining across and within the graben encountered only minor quantities of groundwater and flow of Little Bear Spring was not impacted.

The potential source of recharge for the graben system identified in these studies was Mill Fork Canyon. Water flowing down Mill Fork Canyon enters the alluvial system above/near the southern trace of the graben and provides recharge to the fault systems associated with Little Bear Spring.

Physically, the North Rilda Area (including the Mill Fork Permit Area ~~State Coal Lease~~ Access) is separated from Little Bear Spring by Mill Fork Canyon. As indicated above, the

Mill Fork Canyon Graben was intersected and crossed to the north of the North Rilda Area in the Beaver Creek # 4 Mine. The mine was a relatively dry mine with only few isolated roof drippers associated with the Mill Fork Fault system and Little Bear Spring was not impacted due to mining.

The potential for mining activities in the North Rilda Area (including the Mill Fork Permit Area ~~State Coal Lease ML-48258~~ Access) to impact Little Bear Spring is believed to be minimal for several reasons;

1) Little Bear Spring is located two miles north of the North Rilda Area,
2) There is a physical barrier between the North Rilda Area and Little Bear Spring - Mill Fork Canyon,
3) Exploration data and in-mine information from the development of the 5th North Mains, indicates that the displacement associated with the Mill Fork Graben diminishes to the south from where it was intercepted in the Beaver Creek No. 4 Mine located north of Mill Fork Canyon,
4) Mining within the Mill Fork Permit Area ~~State Coal Lease~~ access will be restricted to development mining only (no subsidence is projected),
5) Mining in the Mill Fork Permit Area ~~State Coal Lease~~ access will be within the Hiawatha coal seam which is located approximately two hundred feet stratigraphically above the source of the Little Bear Spring,
6) Mining north the North Rilda Area (Beaver Creek #4 Mine) which intercepted and penetrated the Mill Fork Graben (identified as a potential source of groundwater recharge) did not impact the flow of Little Bear Spring.

*Little Bear Spring Mitigation:* If mining intersects faulting related to the Mill Fork Graben during development, permanent seals will be installed to control unusual or atypical groundwater if present. PacifiCorp will utilize a pressure grout system to limit groundwater infiltration. In addition, PacifiCorp will monitor groundwater as detailed in the following section; R645-301-731.200: Water Monitoring: Groundwater B: In-Mine.

Depletion of Storage

Three main areas-types of groundwater depletion have been documented to occur within the East Mountain mine plan area. They include: 1) fluvial sandstone channel systems, 2) faults and fractures, and 3) structural low areas. Each area-type will be discussed separately as it pertains to the North Rilda area.

1. *Fluvial Sandstone Channel Systems*

The majority of the intercepted groundwater was confined to dewatering or perched fluvial sandstone systems. The sandstone channels (ancient river systems) overlie and scour into the underlying strata (refer to Volume 9 - Hydrologic Section: Maps HM-2 and HM-3). The locations of the channels shown on HM-2 and HM-3 are based on data collected from in-mine mapping and numerous drill holes, both in-mine and surface, thathave been completed on

the property. These channel systems were part of a deltaic depositional setting active during and after the coal-forming peat accumulation. The largest influx of water originates from the roof when mining advances beneath sandstone top. The sandstone, which is semi-permeable and porous, affords an effective route of water transport. Mudstone, siltstone, and interbedded materials generally act as aquicludes which impede water flow unless fracturing of the formation has allowed for secondary permeability. Of the water producing areas, those closest to the active mining face exhibit the greatest flows. As mining advances, the area adjacent to the active face continues to be excessively wet and previously mined wet areas experience a decrease in flow. Data collected from 1978 through 1996 indicate a ninety percent reduction in water flows from roof sampling sites over a five-month period (or less) as the mining face is advanced (review annual Hydrologic Monitoring reports). It has also been noted that the outermost entries of a multiple entry system remain wet for a longer period of time than the inner entries. It appears that the water source is being dewatered since excavated areas of the mine do not continue to produce water indefinitely. The water source must be either of limited extent, i.e., a perched aquifer, or have a limited recharge capacity, i.e., poor horizontal and vertical permeability. Figure HF-42 (refer to Volume 9 - Hydrologic Section of the Deer Creek MRP) depicts an idealized view of the dewatering process.

To monitor and to quantify the effects of dewatering the perched aquifers overlying the coal seams and on the Star Point Sandstone, PacifiCorp installed a series of holes both in the Deer Creek and Cottonwood/Wilberg mines. These holes are located in main development entries and are shown on maps HM-2 and HM-3 (hole development information can be found in Volume 9 - Hydrologic Support Information). Holes in the Cottonwood/Wilberg Mine were developed in the upper member of the Star Point Sandstone - Spring Canyon. Pressure transducers were installed and monitored on a continuous basis to quantify the impacts to the Star Point Sandstone due to dewatering of the isolated perched aquifers above the Hiawatha Seam. As shown in Figure HF-44 (refer to Volume 9 - Hydrologic Section of the Deer Creek MRP) the water elevations remained constant over time with no apparent evidence of an impact-cone of depression due to dewatering of the perched aquifers. In the Deer Creek Mine a series of holes was developed in the lower portion of the Blackhawk and upper member of the Star Point Sandstone. These holes are located along the axis of the Straight Canyon Syncline and are in close proximity to the Roans Canyon Fault system (see HM-2). Monitoring of these wells has shown a decline of between two to seven feet in elevation thought to be related to interception of groundwater in the development entries off 4th South, Deer Creek Mine. Mining in the 4th South area was completed in May of 1992 and seals were installed in 4th South between crosscuts 24 and 25 (refer to Volume 9 - Hydrologic Section of the Deer Creek MRP: Figure HF-45). Monitoring of a well adjacent to the sealed area (3rd North xc-8) revealed the level of the water returned pre-mining level within approximately two years of the seal installation (refer to the 1995 Hydrologic

Monitoring Report). To develop an possible area of influence-cone of depression on a regional basis, PacifiCorp installed a series of groundwater monitoring wells in Cottonwood Canyon downgradient of future mining north of the Roans Canyon Fault system (refer to Volume 9 - Hydrologic Section of the Deer Creek MRP: Appendix F).

Lithologic and hydrologic characteristics of the North Rilda area were evaluated through a series of exploration programs conducted from 1979 through 1996. A total of sixteen (16) surface exploration holes were completed utilizing both conventional drilling techniques and helicopter supported operations. Even though sandstone deposits exist overlying the coal seams no measurable water quantities were detected during the drilling operations.

2. *Faults and Fractures*

Another source of intercepted groundwater is faults and fractures, especially in the Deer Creek Mine. As discussed in the permit and adjacent area geology (see R645-301-721) the strata within the property have been offset by a series of north-south trending fault zones. Generally, the faults are nearly vertical and do not have significant amounts of fault gouge or drag associated with them. One of the major faults present in the region, the Pleasant Valley Fault, has been intersected in both the Deer Creek and Wilberg mines.

The Pleasant Valley Fault consists of two parallel fractures about 150 feet apart. The faults' total displacement (where it was intersected in the Deer Creek Mine) to the north is 150 feet with its down thrown side on the east. The displacement diminishes to less than one foot where it was intersected in the Wilberg Mine near the south end of the property. Where the fault has been intersected by mine workings, groundwater inflow has been insignificant.

Another north-south trending fault, the Deer Creek Fault, is present to the east of the Pleasant Valley Fault. It limits the eastward development of the Wilberg/Cottonwood and Deer Creek mines and also forms an aquiclude preventing water migration to the east. The displacement of the Deer Creek Fault ranges from 100 to 170 feet with the east block being down thrown.

A northeast-southwest trending fault system, the Roans Canyon Graben, is present along the axis of the Straight Canyon Syncline. The system contains up to six normal faults having displacements ranging from a few feet to over 150 feet. Coal deposits present to the north of the fault have been accessed through rock tunnels driven from the 3rd North section of the Deer Creek Mine.

Based upon the extensive surface exploration programs and surface mapping, no faulting is projected within the proposed mine plan (refer to Volume 9 Map HM-9). The projection of the Mill Fork Canyon fault system is to the west of the proposed mine plan area (refer to Volume 9 Map HM-9).

3. *Structural Low Areas*
Structural features such as the Roans Canyon Fault Graben, the Straight Canyon Syncline, and the Deer Creek Fault, had an influence on the hydrologic regime south of North Rilda within the East Mountain mine plan area (detailed in Volume 9 - Hydrologic Section). Geology of the North Rilda Area is less complex than that of central portion of the East Mountain property (see Volume 8 - Geology Section). The fault system that crosses Mill Fork canyon (referred to as the Mill Fork Canyon fault system) trends to the west of the projected mine workings. The Mill Fork Canyon fault system was intersected and crossed to the north of the North Rilda mine plan extension in the Beaver Creek Coal Company No. 4 Mine. The graben consisted of series of faults with a total displacement of approximately thirty (30) feet. Beaver Creek No. 4 Mine was a relatively dry mine with only few isolated roof dippers associated with the Mill Fork Fault system.

Water Quality

The mines in the coal fields of the Wasatch Plateau tend to act as interceptor drains. The groundwater that is brought to the surface has a lower dissolved solids content than would have existed were the water to continue its downward movement through shale layers, dissolving increased amounts of salt with distance (Southeastern Utah Association of Governments, 1977; Vaughn Hansen Associates, 1979; Danielson et al., 1981). The quality also decreases vertically because of the influence of marine sediments as well as along the trend of decreasing quality from north to south.

Post Mining

The monitoring of in-mine water sources has shown that the long-term water flow from a given area is much less than ten percent (10%) of the initial flow from the area. Most of the current inflow into the mine workings is from areas where water storage has not been depleted. After the storage has been depleted, the flow will reduce to roughly equal the recharge rate which is expected to be less than ten percent (10%) (data presented earlier in this report) of the current discharge rate.

Post mining discharge from the North Rilda Area is not anticipated due to the limited extent of the groundwater resources. As discussed in section 721: GENERAL REQUIREMENTS - EXISTING GROUNDWATER RESOURCES: PERMIT AND ADJACENT AREA GROUNDWATER CHARACTERISTICS groundwater resources in the the North Rilda Area is limited due to several factors including; stratigraphic controls, limited surface area for infiltration, topographic configuration of the area (incised canyons), and outcropping of the Star Point Sandstone Formation around the entire North Rilda Ridge. ~~If intercepted perched aquifers are encountered in the North Rilda Area, water will migrate downdip to the south/southeast, (refer to Volume 8 - Geologic~~

~~Section of the Deer Creek MRP for structual contour maps of the Blind Canyon and Hiawatha seams). If the impounded water exceeds the capacity of the abandoned workings, water from the North Rilda Area will migrate to the northern portion of 3rd North and eventually flow to the south/southwest.~~ However, based on data collected by PacifiCorp, discharge of intercepted groundwater from the Mill Fork Area was similar to that of the Deer Creek Mine and adjacent Genwal Mine (refer to Volume 12 Hydrology, R645-301-728,I,c). Discharge from the these mines ranges from 500 to 1,500 gpm (Deer Creek Mine average discharge ranged from 1,000 to 1,500 gpm [Energy West Mining Company Annual Reports], discharge from the Genwal Mine averaged approximately 900 gpm [data received from UtahAmerican Energy - Crandall Canyon Mine Flows]). All of the intercepted groundwater from the southern portion of the Deer Creek Mine will be discharged to the Deer Creek drainage system. Intercepted groundwater from the Mill Fork Area will be routed to the Rilda Canyon 1st Right Portals and piped directly to the Huntington Power Plant Raw Water Pond (refer to Engineering Section for discussion and design for sealing the 1st Right portals, as well as Volume 11 A, Engineering, Appendix I for design of the pipeline to Huntington Power Plant Raw Water Pond). Discharge from the Deer Creek Mine will be monitored as specified in the UPDES permit (refer to Volume 9, Appendix B).

### *R645-301-729 Cumulative Hydrologic Impact Assessment (CHIA)*

The Division provides an assessment of the probable cumulative hydrologic impacts of the coal mining and reclamation operation and all anticipated coal mining and reclamation operations upon surface and groundwater systems in the cumulative impact area. The CHIA can be reviewed at the Division's offices in Salt Lake City.

## R645-301-730 OPERATION PLAN

Water Monitoring Location Map: refer to Volume 9 - Hydrologic Section: Map HM-1.

### *R645-301-731 General Requirements*

PacifiCorp has submitted a plan to minimize disturbance to the hydrologic balance, to prevent material damage, and to support approved post-mining land use (see Operational and Reclamation plans of the individual PAP's). Volume 11 - North Rilda Area details the plan to minimize disturbance to the hydrologic balance related to the Rilda Canyon Portal Facilities, to prevent material damage, and to support approved post-mining land use.

#### **R645-301-731.100 Hydrologic Balance Protection**

#### **R645-301-731.110 Groundwater Protection**

Although the analysis of the overburden samples tested has shown that no toxic or hazardous materials are present, groundwater quality will be protected by handling earth materials and runoff in a manner that minimizes infiltration to the groundwater system.

**R645-301-731.120Surface Water Protection**

Surface water quality will be protected by handling earth materials, groundwater discharges, and runoff in a manner that minimizes the potential for pollution. PacifiCorp developed a Drainage and Sediment Control Plan to protect the surface and groundwater resources in the area of the Rilda Canyon Portal Facilities which includes: the fan portal access, mine facilities, topsoil storage area. The Drainage and Sediment Plan will ensure protection of water resources by handling soil, overbuden and refuse from previous mining activities in such a manner to minimize discharge of pollutants to the hydrologic regime. Details of the Drainage and Sediment Control Plan will be presented in Volume 11 Appendix Volume - Hydrology: Appendix B.

**R645-301-731.200 Water Monitoring**

Groundwater

Groundwater within the East Mountain mine plan area (including North Rilda area) will be monitored according to the schedules in Appendix A (refer to Volume 9 - Hydrologic Section). Monitoring equipment, structures used in conjunction with monitoring the quality and quantity of groundwater on-site and off-site will be properly installed, maintained, operated, and will be removed by PacifiCorp when approved by the Division.

Groundwater will be monitored and data will be submitted in an electronic format to the Division's Coal Water-Quality Database quarterly for each monitoring location. Monitoring subimittals will include analytical results from each sample taken during the quarter. When the analysis of any groundwater sample indicates noncompliance with the permit conditions, PacifiCorp will promptly notify the Division and immediately take actions provided for in R645-300-145 and R645-301-731.

PacifiCorp has conducted baseline and operational monitoring of the groundwater resources in and adjacent to the North Rilda mine plan area. The data collected have provided information useful in the understanding of potential hydrologic consequence of mining. Monitoring of the following groundwater resources will proceed through mining and continue during reclamation until bond release. Removal of the groundwater monitoring structures, *(Rilda Canyon piezometers)*, will be approved by the Division in conjunction with the Utah State Division of Water Rights.

A. *East Mountain Springs*: No springs will be undermined in the North Rilda area. Only two springs are within the North Rilda mine plan area, 80-50 located in Section 29 and the Rilda Canyon Springs located in Section 28 (refer to Volume 9 Map HM-9). Spring 80-50 will be monitored during the months of July and October (included

in the East Mountain Spring Monitoring Program, refer to Volume 9 - Hydrologic Section: Appendix A). Rilda Canyon Springs will be monitored in cooperation with NEWUSSD on a monthly basis for flow and quarterly for quality. Parameters analyzed are those listed in the "DOGM Guidelines for Groundwater Water Quality" (refer to Volume 9 - Hydrologic Section: Appendix A).

~~B. *In Mine*: Intercepted groundwater sampling sites, (either roof drippers or contribution from the floor), will be established according to the Special Condition Stipulation in the Deer Creek permit renewal, (February 6, 1996), "*If during entry development, sustained quantities of groundwater are encountered which are greater than 5 gpm from a single source in an individual entry, and which continue after operational activities progress beyond the area of groundwater production, PacifiCorp must monitor these flows for quality and quantity under the approved monitoring plan".* In addition to the standard plan described above, if mining encounters significant quantities of groundwater which issues from a fault zone, PacifiCorp will; quantify the volume, sample for water quality according to the approved monitoring plan (baseline parameters for two year period), conduct isotopic sampling using a systematic approach (phase 1: tritium analysis, phase 2: depending the results of the tritium sampling, perform carbon age dating). Parameters analyzed are those listed in the "DOGM Guidelines for Groundwater Water Quality" (refer to Volume 9 - Hydrologic Section: Appendix A).~~

~~C. *Waste Rock Wells:* One water sample will be collected and analyzed per location quarterly. Parameters analyzed are those listed in the "DOGM Guidelines for Groundwater Water Quality" (refer to Volume 9 - Hydrologic Section: Appendix A).~~

~~D~~B. *Rilda Canyon Springs - NEWUSSD:* One water sample will be collected and analyzed per location quarterly. Parameters analyzed are those listed in the "DOGM Guidelines for Groundwater Water Quality" (refer to Volume 9 - Hydrologic Section: Appendix A).

~~E~~C. *Rilda Canyon Wells - NEWUSSD Spring Area:* Water level will be monitored on a monthly basis depending upon access (refer to Volume 9 - Hydrologic Section: Appendix A).

Surface Water

PacifiCorp has conducted baseline monitoring of surface waters within and adjacent to the mine plan area (refer to Annual Hydrologic Monitoring Reports). Long-term monitoring sites in Rilda Canyon have been equipped with Parshall style flumes to facilitate monitoring. Monitoring equipment, structures used in conjunction with monitoring the quality and quantity of surface water on-site and off-site will be properly installed, maintained, operated, and will be removed by the PacifiCorp when approved by the

Division. Water samples will be collected and analyzed quarterly (one sample at low flow and high flow) during the first or second week of the quarter. Parameters analyzed are those listed in the "DOGM Guidelines for Surface Water Quality." Locations of all surface monitoring sites and sampling schedules can be found in Appendix A (refer to Volume 9 - Hydrologic Section).

Surface water will be monitored and data will be submitted in an electronic format to the Division's Coal Water-Quality Database quarterly for each monitoring location. Monitoring submittals will include analytical results from each sample taken during the quarter. When the analysis of any surface water sample indicates noncompliance with the permit conditions, PacifiCorp will promptly notify the Division and immediately take actions provided for in R645-300-145 and R645-301-731. For point source discharges, monitoring will be conducted in accordance with 40 CRF Parts 122 and 123, R645-301-751 and as required by the Utah Division of Environmental Health for National Pollutant Discharge Elimination System permit.

**R645-301-731.300 Acid and Toxic-forming Materials**

To characterize the acid-forming potential of the strata encountered during mining, PacifiCorp collected samples of the immediate roof, mid-seam, and floor. All samples were analyzed by a certified laboratory according to the "Guidelines for Management of Topsoil and Overburden for Underground and Surface Coal Mining. Data collected and reported in R645-301-600 Geologic Section and Volume 11, Mill Fork Lease Geologic Section, reveals overburden encountered in the mine is non-acid/non-toxic forming; refer to R645-301-600 Geologic Section. As discussed in the R645-301-500 Engineering Section, all coal produced from the North Rilda/Mill Fork ~~Lease will be~~ Area was transported to the facilities in Deer Creek Canyon. Under normal operations, waste rock encountered in the mine will be left in-place or transported to the Deer Creek Waste Rock Storage Site, refer to Volume 10 (now managed under a separate permit owned and controlled by Bowie Refined Coals LLC). In addition, a temporary containment area ~~will be~~ was designated at the Rilda Canyon Portal Facilities for incidental quantities of waste rock which ~~will be~~ was transported to the Deer Creek Waste Storage Site for final placement.

**R645-301-731.400 Transfer of Wells**

Before final release of bond, exploratory or monitoring wells will be sealed in a safe and environmentally sound manner in accordance with R645-301-631, R645-301-738, and R645-301-765. With the prior approval of the Division, wells may be transferred to another party for further use. However, at a minimum, the conditions of such transfer will comply with Utah and local laws and the Permittee will remain responsible for the proper management of the well until bond release in accordance with R645-301-529, R645-301-551, R645-301-631, R645-301-738, and R645-301-765.

**R645-301-731.521 Surface Entries and Accesses to Underground Workings**

Underground access to the Rilda Canyon Portal Facilities is achieved by the continuation of a set of three entry 1st Right Submains and development of two rock slopes to the portal facility area near the intersection of the right and left forks. All of the development has occurred in the Hiawatha coal seam or the Starpoint Sandstone just beneath it. During the development of the Rilda Canyon Portal Facilities two separate surface breakouts were constructed; 1) Mine Fan; and 2) Intake Access (refer to R645-301-500 Engineering Section). Both portals were developed from underground as rocks slopes developed through the upper member of the Star Point Sandstone (Spring Canyon Member). The slopes extend from the portal facility area to an interception point in the Hiawatha Coal Seam. Inclination (dip) of the Hiawatha seam prevents water from discharging at the portal facilities. Although no groundwater was intercepted during the development of the intake rock slope ~~therefore, no post mining gravity discharge from the Rilda Portal is expected~~. PacifiCorp intercepted groundwater during development and extraction processes in the Mill Fork Area. A post mining gravity discharge is expected at the Rilda Portals. Refer to the French drain and portal plug design in Engineering, Figures Section, Figure R645-301-500d and the design of the mine water relief pipeline found in Volume 11 A, Appendix Volume, Engineering, Appendix I. A complete discussion of the origins, flow paths, and characteristics of this water is found in Volume 12, Hydrology.

## R645-301-731.530 State-appropriated Water Supply

PacifiCorp will promptly replace any State-appropriated water supply that is contaminated, diminished or interrupted by UNDERGROUND COAL MINING AND RECLAMATION ACTIVITIES conducted after October 24, 1992, if the affected water supply was in existence before the date the Division received the permit application for the activities causing the loss, contamination or interruption. The baseline hydrologic and geologic information required in R645-301-700 will be used to determine the impact of mining activities upon the water supply.

## R645-301-731.600 Stream Buffer Zones

Mining related activities will not occur within 100 feet of a perennial or intermittent stream unless the Division authorizes such activities.

As mentioned in the PROBABLE HYDROLOGIC CONSEQUENCES DETERMINATION section, (728: Hydrologic Balance - Surface Water System), the drainages conveying runoff away from the mine plan areas are streams in Rilda, and Mill Fork canyons. Second mining (ie. longwall extraction, room & pillar, of the North Rilda area) will be limited to the ridge separating Rilda and Mill Fork canyons and subsidence will not occur beneath the stream channels of these canyons. First mining (ie. mainline, gateroad development) will occur below the right fork of Rilda Canyon. For a complete analysis of the proposed "no subsidence" design of the 4/5th North Mains development within the Right Fork of Rilda and the long-term stability analysis, refer to the Volume 11

Appendix Volume - Engineering: Appendix A. To protect the alluvial/colluvial system of the Right Fork of Right Fork of Rilda Canyon, a stream buffer zone was established based on the extent of the riparian zone and the angle of draw from the Hiawatha Seam, the lowest seam to be mined. The riparian zone within the right fork of Rilda Canyon was delineated by field observation, aerial photography, and map contour analysis. The extent of the identified zone is based on the contact of the alluvial/colluvial fill with the canyon's side slopes. The angle of draw was calculated from the Hiawatha Seam horizon/elevation @ 15 degrees to the point of intersection on the surface. The stream buffer zone delineates the area restricted from full extraction mining. The referenced 15 degree angle of draw is an industry/agency accepted standard used for delineation of surface influence protection from mining areas considered for full extraction mining. Mining experience at Energy West's Deer Creek, Cottonwood, and Trail Mountain mines has provided a sound, scientific basis for using the 15$^{o}$ angle of draw mentioned above (refer to Annual Subsidence Reports of the Deer Creek MPR).

The undisturbed area, adjacent to the disturbance associated with the Rilda Canyon Portal Facilities, are drained by ephemeral drainages on the south facing slope of North Rilda Ridge which are tributaries to Rilda Creek. The undisturbed drainages report to Rilda Creek through a series of culverts passing beneath below the facility. Stream buffer zones ~~will be~~ are maintained along Rilda Creek. Portions of the facilities will be within one hundred (100) feet of Rilda Creek. Buffer signs have been installed along Rilda Creek to indicate the area which beyond no disturbance shall take place.

Water quality of Rilda Creek is protected from potential impacts associated with the Rilda Canyon Portal Facilities through a combination sediment control structures and revegetation (refer to R645-301-300 Biology Section for interim revegetation and Volume 11 Appendix Volume - Hydrology: Appendix B for Drainage and Sediment Control Plan).

**R645-301-731.700 Cross Section and Maps**

A water supply intake system known as "North Emery Water Users Special Service District - Rilda Canyon Springs" is located in Section 28, Township 16 South, Range 7 East (refer to Volume 9 Map HM-9, a detailed drawing of the collection system is provided in Volume 9 - Hydrologic Section of the Deer Creek Mine MRP). The intake system consists of a series of french drains collecting near surface alluvial water as a supply source for culinary water (for complete description of the NWEUSSD system refer to R645-721 “Existing Groundwater Resources”).

**R645-301-731.800 Water Rights and Replacement**

In order to fulfill the requirements to restore the land affected by applicant's mining operations to a condition capable of supporting the current and post-mining land uses stated herein, the applicant will replace water determined to have been lost or adversely affected as a result of applicant's mining operations if such loss or adverse impact occurs prior to

final bond release. The water will be replaced from an alternate source in sufficient quantity and quality to maintain the current and post-mining land uses.

As outlined in the Existing Groundwater and Surface Resources and Probable Consequences Determination, second/full extraction mining of the North Rilda Area will be limited to the ridge separating Rilda and Mill Fork canyons and subsidence will not occur below the stream channels of these canyons. No springs will be undermined in the North Rilda Area. First mining (ie. mainline, gateroad development) will occur below the right fork of Rilda Canyon. For a complete analysis of the proposed "no subsidence" design of the 4/5$^{th}$ North Mains development within the Right Fork of Rilda and the long-term stability analysis refer to the Volume 11 Appendix Volume - Engineering: Appendix A. To protect the alluvial/colluvial system of the right fork of Rilda Canyon a stream buffer zone was established based on the extent of the riparian zone and the angle of draw from the lowest seam to be mined - Hiawatha Seam. The riparian zone within the right fork of Rilda Canyon was delineated by field observation, aerial photography, and map contour analysis. The extent of the identified zone is based on the contact of the alluvial/colluvial fill and the canyon's side slopes. The angle of draw was calculated from the lowest seam to be mined, Hiawatha, horizon/elevation @ 15 degrees to the point of intersection on the surface. The stream buffer zone delineates the area restricted to full extraction mining. If necessary to prevent groundwater infiltration below the right fork of Rilda Canyon, PacifiCorp will utilize a pressure grout system similar to the technique applied at the Roans Canyon Fault to limit groundwater infiltration.

## *R645-301-732 Sediment Control Measures*

732.100 Siltation Structures. Siltation structures will be constructed and maintained to comply with R645-301-742.214 (refer to R645-301-740). Any siltation structure that impounds water will be constructed and maintained to comply with R645-301-512.240, R645-301-514.300, R645-301-515.200, R645-301-533.100 through R645-301-533.600, R645-301-733.220 through R645-301-733.224, and R645-301-743.

### R645-301-732.200 Sedimentation Ponds

Sedimentation ponds whether temporary or permanent, will be designed in compliance with the requirements of R645-301-356.300, R645-301-356.400, R645-301-513.200, R645-301-742.200 through R645-301-742.240, and R645-301-763. No permanent structures including sediment ponds are planned for the Rilda Canyon Portal Facilities. A Temporary sediment pond has been constructed below the surface facilities designed with a emergency spillway~~s~~ that will safely discharge a 25-year, 6 hour precipitation event (refer to R645-301-742.220 and Volume 11 Appendix Volume - Hydrology: Appendix B).

The sediment pond was designed to contain the volume of a 10yr/24 hour event over an area of approximately 9.0 acres. This was the acreage of the original facilities design. Because the site area that actually reports to the pond has been reduce to approximately 3.5

acres, and includes a sediment basin with a water holding capacity, it is not expected that the emergency spillway will ever be used.

**R645-301-732.300 Diversions**

All diversions have been constructed and will be maintained to comply with the requirements of R645-301-742.100 and R645-301-742.300.

**R645-301-732.400 Road Drainage**

All roads have been constructed and will be maintained and reconstructed to comply with R645-301-742.400.

## *R645-301-733 Permanent and Temporary Impoundments*

No permanent structures including impoundments are planned for the Rilda Canyon Portal Facilities. A Temporary impoundment (sediment pond and containment berms) has been designed and constructed as specified by the R645-301-733 and R645-301-743 (refer to R645-301-743 and Volume 11 Appendix Volume - Hydrology: Appendix B for design specifications).

## *R645-301-734 Discharge Structures*

Discharge structures have been constructed and will be maintained to comply with R645-301-744.

## *R645-301-735 Disposal of Excess Spoil*

Excess spoil material generated during the construction of the return and intake portals to access the Hiawatha coal seam was stored underground.

## *R645-301-736 Coal Mine Waste*

An area designated for the disposal of coal mine waste and coal mine waste structures has been constructed and will be maintained to comply with R645-301-746 (refer to Volume 11 Map 500-2 for the location of coal mine waste temporary storage area).

## *R645-301-737 Non-Coal Mine Waste*

Non-coal mine waste will be stored and final disposal of non-coal mine waste will comply with R645-301-747.

### *R645-301-738 Temporary Casing and Sealing of Wells*

Each well which has been identified in the approved permit application to be used to monitor ground water conditions will comply with R645-301-748.

## R645-301-740 DESIGN CRITERIA AND PLANS

### *R645-301-741 General Requirements*

PacifiCorp will design, construct and maintain sediment control measures using the best technology currently available to:

a. Prevent, to the extent possible, additional contributions of sediment to stream flow or to runoff outside the permit area;
b. Meet the effluent limitations under R645-301-751; and
c. Minimize erosion to the extent possible.

Sediment control measures include practices carried out within and adjacent to the disturbed area. The sedimentation storage capacity of practices in and downstream from the disturbed areas will reflect the degree to which successful mining and reclamation techniques are applied to reduce erosion and control sediment. Sediment control measures consist of the utilization of proper mining and reclamation methods and sediment control practices, singly or in combination. Sediment control methods include, but are not limited to:

a. Retaining sediment within disturbed areas;
b. Diverting runoff away from disturbed areas;
c. Diverting runoff using protected channels or pipes through disturbed areas so as not to cause additional erosion;
d. Using straw dikes, riprap, check dams, mulches, vegetative sediment filters, dugout ponds and other measures that reduce overland flow velocities, reduce runoff volumes or trap sediment.
e. Paving.

#### R645-301-742.200 Siltation Structures

Additional contributions of suspended solids and sediment to streamflow or runoff outside the permit area will be prevented to the extent possible using the best technology currently available.

742.212 Siltation structures for an area will be constructed before beginning any coal mining and reclamation operations in that area and, upon construction, will be certified by a qualified registered professional

engineer to be constructed as designed and as approved in the reclamation plan.

742.213 Any siltation structures which impounds water will be designed, constructed and maintained in accordance with R645-301-512.240, R645-301-514.300, R645-301-515.200, R645-301-533.100 through R645-301-533.600, R645-301-733.220 through R645-301-733.224, and R645-301-743.

For complete details concerning design, construction and maintenance of sediment control measures, siltation structures, sedimentation pond, and impoundments refer to Volume 11 Appendix Volume - Hydrology: Appendix B: Drainage and Sediment Control Plan.

**R645-301-742.220 Sedimentation Pond**

The Rilda Canyon Portal Facilities include construction of a single sedimentation pond located at the eastern extent of the disturbed area (refer to R645-301-500 Engineering Section Map 500-2). Analysis utilized to determine the size and hydraulics related to the construction and operation of the sedimentation pond is included Volume 11 Appendix Volume - Hydrology: Appendix B: Drainage and Sediment Control Plan.

The sediment pond for the Rilda Canyon Portal Facilities includes the construction of single sedimentation pond designed and constructed to store the volume of two consecutive 10-year, 24-hour precipitation event. Sedimentation pond designs ~~will~~ comply with R645-301-742.220 and does not meet the sizing criteria of the MSHA, 30 CFR 77.216(a).

Therefore, as required by R645-301-742.223, the pond has been design and constructed that primarily on storage to control runoff and is equipped with a single non-erodible open channel. This spillway is designed to safely discharge a 25-year, 6-hour or larger precipitation event.

Decanting of the pond, as required, will be accomplished by use of a portable pump with an inverted inlet, and pumping capacity of 100 gpm or greater. Decanting activities will only occur with Division of Water Quality approval with concurrence from DOGM.

**R645-301-742.230 Other Treatment Facilities**

Site development related to the Rilda Canyon Portal Facilities is up gradient of the Rilda Canyon Springs. The site has been graded and paved to allow construction of the mine entries, facilities pad, and ancillary facilities on relatively flat areas. All grading and paving has been sloped away from the receiving stream/Rilda Canyon Springs and drains to a drop drain and culvert system that is diverted to a sediment basin minimizing potential impacts.

As stated previously, two separate drainage systems are provided at the Rilda Canyon portal facility site and are classified as "undisturbed" and "disturbed" collection systems.

The "undisturbed" system collects overland runoff water above the portal site and from side slopes adjacent to the site and conveys it past the disturbed area into the natural channel of Rilda Canyon Creek. The "disturbed" collection system collects runoff from and storage areas and conveys it to a temporary sedimentation basin east of the facilities pad. Flows that exceed the holding capacity of the sediment basin is diverted to the sediment pond.

**R645-301-742.240 Exemptions**

It is anticipated during the design process that disturbed areas which cannot be reasonably treated by the sedimentation pond due to remote geographic locations and small areas not justifying a sediment pond but which cannot meet effluent limitations without treatment are considered Alternative Sediment Control Areas (ASCA). These areas will be treated by the best control technology available which includes, but is not limited to: silt fences, berms, catch basins, strawbales, gravel filter dikes, check dams, sediment traps and mulches. A list of the ASCA's including type of treatments within the Rilda Canyon Portal Facility area is discussed in Volume 11 Appendix Volume - Hydrology: Appendix B. Locations of each ASCA is found on Map 700-5.

**R645-301-742.300 Diversions**

Two separate drainage systems will be provided at the Rilda Canyon Portal Facility site and will be classified as "undisturbed" and "disturbed" collection systems. The "undisturbed" system collects water above the portal site and from side slopes adjacent to the site and will convey it past the disturbed area into the natural channel of Rilda Canyon Creek. The "disturbed" collection system collects runoff from portal area, storage areas and conveys it to a temporary sedimentation basin east of the facilities pad. Flows that exceed the holding capacity of the sediment basin are diverted to the sedimentation pond.

Undisturbed Drainage System
The undisturbed drainage control plan consists of a series of properly designed ditches and culverts which effectively divert undisturbed drainage beneath the disturbed area to Rilda Creek.

Disturbed Drainage System
The "disturbed" collection system collects runoff from roads, storage areas, and portal area conveying it to a temporary sedimentation basin east of the facilities pad. Flows that exceed the holding capacity of the sediment basin are diverted to the sedimentation pond. This system will consist of concrete catch basins, small-diameter CMP culvert and open ditches designed to adequately collect and pass peak flow from a 10 yr./6 hr. precipitation event (refer to Volume 11 Appendix Volume - Hydrology: Appendix B: Drainage and Sediment Control Plan for details related to the design and construction of the diversion structures).

Maintenance on the above drainage system consists of annual inspection and cleaning of all culverts, inlets and ditches. Trash and debris are removed and the system is checked for damage which might require repair to ensure proper operation of the system.

During mine-site reclamation, all diversions will be removed and the drainages re-established. Details are included in Volume 11 Appendix Volume - Hydrology: Appendix B.

**R645-301-742.320 Diversion of Perennial and Intermittent Streams**

The location and placement of the Rilda Canyon Portal facilities eliminates the need to divert any perennial or intermittent streams.

**R645-301-742.330 Diversion of Miscellaneous Flows**

742.331 Miscellaneous flows, which consist of all flows except for perennial and intermittent streams, are diverted away from disturbed areas if required or approved by the Division. Miscellaneous flows include ground-water discharges and ephemeral streams. Undisturbed runoff from un-named ephemeral drainages is collected by culvert inlet structures and conveyed through a corrugated steel pipe system to Rilda Creek. Side slopes adjacent to the ephemeral drainages will be collected through a series of designed ditches, drop inlets and culverts located at the toe-of-slopes and conveyed to the undisturbed bypass culverts (refer to Volume 11 Appendix Volume - Hydrology: Appendix B: Drainage and Sediment Control Plan).

742.332 The design, location, construction, maintenance, and removal of diversions of miscellaneous flows meet or will meet all of the performance standards set forth in R645-301-742.310. Refer to Volume 11 Appendix Volume - Hydrology: Appendix B: Drainage and Sediment Control Plan for design, location and maintenance schedule related to the diversion of miscellaneous flows. Removal and reclamation of the diversion structures is covered in R645-301-550 of this volume.

742.333 The requirements of R645-301-742.312.2 have been met as the temporary diversions for miscellaneous flows are designed so that the combination of channel, bank and floodplain configuration is adequate to pass safely the peak runoff of a 2-year, 6-hour precipitation event for a temporary diversion (refer to Volume 11 Appendix Volume - Hydrology: Appendix B: Drainage and Sediment Control Plan).

**R645-301-742.400 Road Drainage**

742.410 All roads associated with the Rilda Canyon Portal Facilities have been designed to ensure environmental protection and safety appropriate for their planned duration and use, including consideration of the type and size of equipment used, the design and construction or reconstruction of roads will incorporate appropriate limits for surface drainage control, culvert placement, culvert size, and any necessary design criteria established by the Division.

742.412 The Rilda Canyon Portal Facilities is located adjacent to Emery Couny Road #306. No part of any road is located in the channel of an intermittent or perennial stream and is in accordance with applicable parts of R645-301-731 through R645-301-742.300.

742.413 Roads are located to minimize downstream sedimentation and flooding.

**R645-301-742.420 Primary Roads**

To minimize erosion, all primary roads are located, insofar as practical, on the most stable available surfaces. Design of the Rilda Canyon Portal Facilities includes one (1) primary road - Facility Access Road (refer to R645-301-534).

**R645-301-742.423 Drainage Control**

The facility access road has been designed, constructed or reconstructed and will be maintained to have adequate drainage control, using structures such as specified in R645-301-534. The drainage control system has been designed to pass the peak runoff safely from a 10-year, 6-hour precipitation event, or an alternative event of greater size as demonstrated to be needed by the Division.

## *R645-301-743 Impoundments*

No permanent structures including impoundments are planned for the Rilda Canyon Portal Facilities. A Temporary impoundment (sediment pond and containment berms) have been designed and constructed as specified by the R645-301-733, 743 and R645-301-512 (refer to Volume 11 Appendix Volume - Hydrology: Appendix B: Drainage and Sediment Control Plan for design specifications).

## *R645-301-744 Discharge Structures*

744.100 Discharge from the Rilda Canyon Portal Facility sedimentation pond, temporary impoundments, and diversions are controlled, by energy dissipators, riprap channels and other devices, where

necessary, to reduce erosion and to prevent deepening or enlargement of stream channels and to minimize disturbance of the hydrologic balance (refer to Volume 11 Appendix Volume - Hydrology: Appendix B: Drainage and Sediment Control Plan).

744.200 Discharge structures have been designed according to standard engineering design procedures.

### *R645-301-746 Coal Mine Waste*

An area designated for the disposal of coal mine waste and coal mine waste structures has been constructed and will be maintained to comply with R645-301-746 (refer to R645-301-500 Engineering Map 500-2 for the location coal mine waste temporary storage area). All coal mine waste generated at the Rilda Canyon Facility ~~will be~~ was disposed of at the Deer Creek Waste Rock Facility (now managed under a separate permit controlled and controlled by Bowie Refined Coals LLC).

### *R645-301-747 Disposal of Noncoal Mine Waste*

747.100 Noncoal mine waste, including but not limited to grease, lubricants, paints, flammable liquids, garbage, machinery, lumber and other combustible materials generated during coal mining and reclamation operations will be placed and stored in a controlled manner in a designated temporary storage site and disposed of at a state-approved solid waste disposal area (refer to R645-301-500 Engineering Section Map 500-2 for the location of the non-coal waste storage site).

## R645-301-750 PERFORMANCE STANDARDS

All coal mining and reclamation operations will be conducted to minimize disturbance to the hydrologic balance within the permit and adjacent areas, to prevent material damage to the hydrologic balance outside the permit area and support approved postmining land uses in accordance with the terms and conditions of the approved permit and the performance standards of R645-301 and R645-302. For the purposes of SURFACE COAL MINING AND RECLAMATION ACTIVITIES, operations will be conducted to assure the protection or replacement of water rights in accordance with the terms and conditions of the approved permit and the performance standards of R645-301 and R645-302.

### *R645-301-751 Water Quality Standards and Effluent Limitations*

Discharges of water from areas disturbed by coal mining and reclamation operations will be made in compliance with all Utah and federal water quality laws and regulations and with effluent limitations for coal mining promulgated by the U.S. Environmental Protection Agency set forth in 40 CFR Part 434.

If the site receives a storm greater than the of the sediment pond, discharge from the sediment pond will be routed through the designed emergency spillway~~s~~ and into the Rilda Canyon Creek (refer to Volume 11 Appendix Volume - Hydrology: Appendix B). Discharge from the sediment pond would constitute an emergency situation and comply with State of Utah Department of Environmental Quality Division of Water Quality storm water regulations.

## *R645-301-752 Sediment Control Measures*

Sediment control measures will be located, maintained, constructed and reclaimed according to plans and designs given under R645-301-732, R645-301-742 and R645-301-760 (refer to Volume 11 Appendix Volume - Hydrology: Appendix B: Drainage and Sediment Plan for design, construction and maintenance of sediment controls for the Rilda Canyon Portal Facilities).

752.100 Siltation structures and diversions are located, maintained, constructed and will be reclaimed according to plans and designs given under R645-301-732, R645-301-742 and R645-301-763.

752.200 Road Drainage. Roads are located, designed, constructed, reconstructed, used, maintained and will be reclaimed according to R645-301-732.400, R645-301-742.400 and R645-301-762 and to achieve the following:

752.210 Control or prevent erosion, siltation and the air pollution attendant to erosion by vegetating or otherwise stabilizing all exposed surfaces in accordance with current, prudent engineering practices;

752.220 Control or prevent additional contributions of suspended solids to stream flow or runoff outside the permit area;

752.230 Neither cause nor contribute to, directly or indirectly, the violation of effluent standards given under R645-301-751;

752.240 Minimize the diminution to or degradation of the quality or quantity of surface- and ground-water systems; and

752.250 Refrain from significantly altering the normal flow of water in streambeds or drainage channels.

### *R645-301-753 Impoundments and Discharge Structures*

Impoundments and discharge structures have been located, maintained, constructed and will be reclaimed to comply with R645-301-733, R645-301-734, R645-301-743, R645-301-745 and R645-301-760.

### *R645-301-754 Disposal of Excess Spoil, Coal Mine Waste and Non-Coal Mine Waste*

Disposal areas, coal mine waste, and non-coal mine waste are located, maintained, constructed and will be reclaimed to comply with R645-301-735, R645-301-736, R645-301-745, R645-301-746, R645-301-747 and R645-301-760.

### *R645-301-755 Casing and Sealing of Wells*

All wells will be managed to comply with R645-301-748 and R645-301-765. Each water well will be cased, sealed, or otherwise managed, as approved by the Division. There are no wells that currently exist in, or are planned to be installed within the Rilda Canyon Portal Facilities disturbed area.

## R645-301-760 RECLAMATION

Before abandoning a permit area or seeking bond release, the PacifiCorp will ensure that all temporary structures are removed and reclaimed, and that all sedimentation ponds, diversions, impoundments and treatment facilities meet the requirements of R645-301 and R645-302 for permanent structures, have been maintained properly and meet the requirements of the approved reclamation plan for permanent structures and impoundments. PacifiCorp will renovate such structures if necessary to meet the requirements of R645-301 and R645-302 and to conform to the approved reclamation plan. For complete discussion related to the reclamation plan for the Rilda Canyon Portal Facilities refer to R645-301-540 and Volume 11 Appendix Volume - Hydrology: Appendix B.

**LIST OF REFERENCES**

Danielson, T.W.; Remillard, M.D.; Fuller, R.H., Hydrology of the Coal-Resource areas in the Upper Drainages of Huntington and Cottonwood Creeks, Central Utah; U.S. Geological Survey-Water Resource Investigations, Open-File Report 81-539.

Doelling, H.H., 1972, Wasatch Plateau Coal Fields, in Doelling, H.H. (ed.), Central Utah Coal Fields; Sevier-Sanpete, Wasatch Plateau, Book Cliffs and Emery, Utah Geological and Mineralogical Survey Monograph Series No. 3, Salt Lake City, Utah.

Graham, M.J.; Tooley, J.E.; Price, D., Preliminary Hydrological Evaluation of the North Horn Mountain Coal-Resource Area, Utah, U.S. Geological Survey, Open-File Report 81-141.

Lines, G.C., The Ground-water System and Possible Effects of Underground Coal Mining in the Trail Mountain Area, Central Utah, U.S. Geological Survey, Open-File Report 84-067.

Mundroff, J.C.; 1972 Reconnaissance of Chemical Quality of Surface Water and Fluvial Sediment in the Price River Basin , Utah, Utah Department of Natural Resources Technical Publication.

Price, D.; Arnow, T., Summary Appraisals of the Nation's Groundwater Resources-Upper Colorado Region, U.S. Geological Survey Professional Paper 813-C, Washington, D.C.

Price, D.; Waddell, K.M.., 1973, Selected Hydrologic Data in the Upper Colorado River Basin: U.S. Geological Hydrologic Invetigations Atlas HA-477.

Southeastern Utah Association of Governments, 1977 Waste Water Quality Management Planning Program (208) for Emery, Carbon, and Grand Counties, Utah, Price, Utah.

Theis, C.V., 1957, The Source of Water Derived from Wells, Essentials Factors Controlling the Response of an Aquifer Development, U.S. Geological Survey Ground Water Notes 34.

Vaughn Hansen Associates, 1981, Hydrologic Inventory of the Skyline Property and Adjacent Areas, Carbon and Emery Counties, Utah, Report Prepared for Costal States Energy Company, Salt Lake City, Utah.

Vaughn Hansen Associates, 1983, Impact Analysis - NEWUA Rilda Canyon Springs, Report Prepared for West Appa Coal Company, Price, Utah.

# PacifiCorp

# Deer Creek Mine

# C/015/0018

**Amendment to Add a Post-Mining Water Discharge at Rilda Canyon Portals, Permit Area Change to Include Discharge Pipeline Route and Potential Treatment Facility Area, PacifiCorp, Deer Creek Mine, C/015/0018, Emery County, Utah**

**<u>Volume 11A, Appendix Volume, Table of Contents</u>**

**Replace entire TOC**

## Soils

**Appendix A** **Report: Soil Inventory and Assessment, Rilda Canyon Portal and Facilities Site, Deer Creek Mine, EIS Environmental and Engineering Consulting, May 2004.**

**Appendix B** **Report: Soil Survey Report of the New North Rilda Canyon Portal Facilities Area, Mt. Nebo Scientific, July 2004. Soil Storage Addendum December 2004.**

## Biology

**Appendix A** **North Rilda Canyon Portal Facilities Area Vegetation Survey, 2004, Mt. Nebo Scientific, Inc.**

**Appendix B** **Vegetation Productivity Estimates Letter, 10/26/04,natural Resources Conservation Service.**

**Appendix C** **County Lists of Utah's Federally Listed Threatened, Endangered and Candidate Species, 5/21/04, Utah Division of Wildlife Resources.**

**Appendix D** **Preliminary Report on Surveys Conducted to Determine Potential Impacts of Rilda Surface Facility Development in Rilda Canyon During 2004, July 2004, by the Utah Department of Natural Resources.**

**Fish and Macroinvertebrate Survey at Rilda Creek, Emery, Utah, Fall 2004, Preliminary Report, Cirrus Ecological Solutions, L.c., November 4, 2004.**

**Appendix E** **2004 Ventilation Fan Sound Survey.**

**Appendix F** **Habitat Suitability Determination Report, 10/5/04, Eis Environmental & Engineering Consulting.**

**Appendix G** **An Evaluation of Bat Habitat: Rilda Canyon, Emery County, Utah, Joel M. and Gabrielle F. Diamond, October 2004.**

**Appendix H** **Guidelines for Managing Birds on Powerlines, Pacificorp, Effective Date: 2/15/99.**

## Land Use

**Appendix A Archeology Report Reference**

## Engineering

**Appendix A Ground Stability Analysis: 4/5th North Mains Crossing of the Right Fork of Rilda Canyon**

**Appendix B Correspondence Letters**

**Appendix C Environmental Assessment for Deer Creek Mine North Rilda Extension**

**Appendix D Decision Notice and Finding of No Significant Impact**

**Appendix E Dogm Letter - Consent to Conduct Mining**

**Appendix F North Rilda Canyon Facilities Geotechnical Investigation**
**- 1991 RB&G Engineeering/geotechnical Design Services**
**- 2004 Amec/lgs Geophysics.**

**Appendix G Rilda Canyon Facilities Site Photos**

**Appendix H Design Drawings - Rilda Canyon Facilities Phase I, 2006**

**Appendix I Design - Deer Creek Mine Water Relief Pipeline 2016 – Rilda Canyon**

## Geology

**Appendix A** **Exploration Borehole Drilling and Abandonment.**

**Appendix B** **Acid and Toxic Forming Analysis (Star Point Sandstone Drill Logs).**

## Hydrology

**Appendix A** **Response of Springs to Longwall Coal Mining at the Deer Creek and Cottonwood Mines, Wasatch Plateau, UT**

**Appendix B** **Drainage and Sediment Control Plan**

**Appendix C** **Rilda Canyon Geomorphology Investigation**

**Appendix D** **Rilda Canyon Spring Relocation Study**

# PacifiCorp

# Deer Creek Mine

# C/015/0018

**Amendment to Add a Post-Mining Water Discharge at Rilda Canyon Portals, Permit Area Change to Include Discharge Pipeline Route and Potential Treatment Facility Area, PacifiCorp, Deer Creek Mine, C/015/0018, Emery County, Utah**

**<u>Volume 11A, Appendix Volume, Engineering Appendix</u>**

**Add Appendix H**

# R645-301-500 ENGINEERING SECTION

## APPENDIX H

- **DESIGN DRAWINGS – RILDA CANYON FACILITY PHASE I, 2006**

| PROJECT NO. | SHEET NO. |
|---|---|
| 0603-008 | 1 |

# ENERGY WEST
# RILDA CANYON FACILITIES
# PHASE I
# 2006

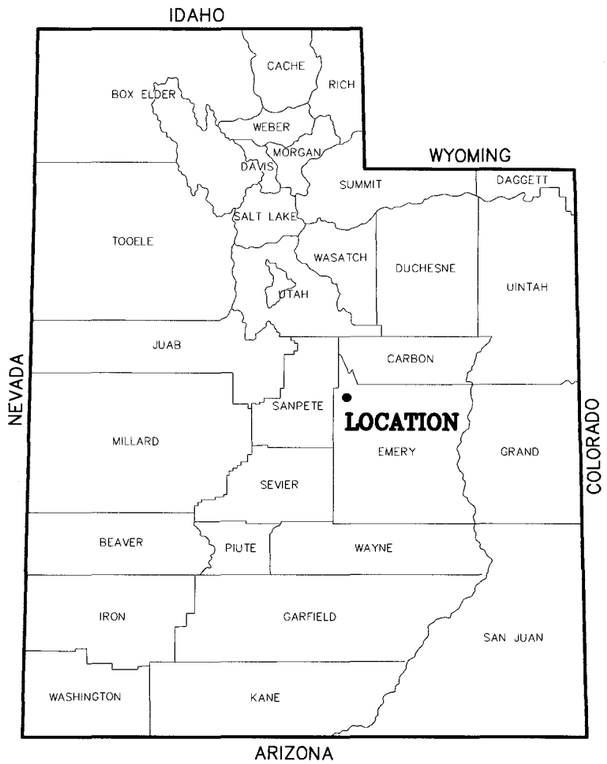


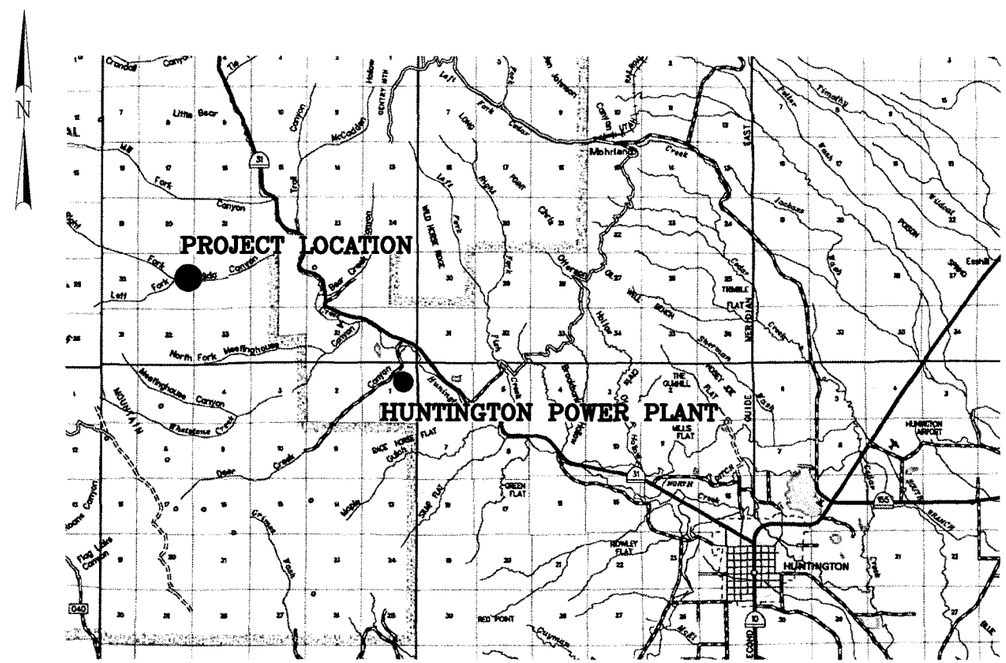


## APPROVAL

**RECOMMENDED FOR APPROVAL:**

LICENSED PROFESSIONAL ENGINEER BRIAN R. BARTON No. 2797402 STATE OF UTAH

ENGINEER DATE 7/25/06

**APPROVED:**

ENERGY WEST MINING COMPANY DATE

## VICINITY MAP


Jones & DeMille Engineering
1535 South 100 West – Richfield, Utah 84701
Phone (435) 896-8266
Fax (435) 896-8268
www.jonesanddemille.com

# INDEX TO PLANS

| SHEET # | SHEET DESCRIPTION |
|---|---|
| 1 | PHASE I – TITLE SHEET |
| 1A | PHASE I – INDEX TO PLANS |
| 1B | PHASE I – LEGEND |
| 1C | PHASE I – PLAN SHEET INDEX |
| TS–01 | PHASE I – TYPICAL SECTIONS |
| | |
| DT–01 to DT–10 | PHASE I – DETAIL SHEETS |
| | |
| PC–01 to PC–03 | PHASE I – PORTAL COLLAR SHEETS |
| | |
| FS–01 TO FS–06 | PHASE I – FAN STRUCTURE SHEETS |
| 430201E | FOUNDATION PLAN |
| | GA25/12.5–1 SUPPLY FAN SYSTEM |
| | |
| SM–01 | PHASE I – SUMMARY SHEET |
| | |
| SP–00 | PHASE I – TOPSOIL REMOVAL PLAN |
| | |
| SP–01 | PHASE I – PAD SITE PLAN |
| SP–01A | PHASE I – PAD SECTIONS |
| SP–01B | PHASE I – PAD GRADING PLAN |
| SP–01C | PHASE I – PAD TYPICAL LOCATION |
| SP–01D | PHASE I – PAD UNDERDRAIN PLAN |
| | |
| SP–02 | PHASE I – SEDIMENT BASIN SITE PLAN |
| SP–02A | PHASE I – SEDIMENT BASIN SECTIONS |
| | |
| SP–03 | PHASE I – SEDIMENT POND SITE PLAN |
| SP–03A | PHASE I – SEDIMENT POND SECTIONS |
| | |
| SP–04 | PHASE I – TOPSOIL STORAGE PLAN |
| | |
| SP–05 | PHASE I – SUBSOIL STORAGE PLAN |
| | |
| PP–01 TO PP–05 | PHASE I – PLAN & PROFILE SHEETS |
| | |
| MW–01 to MW–06 | PHASE I – MSE WALL SHEETS |

| SHEET # | SHEET DESCRIPTION |
|---|---|
| | UDOT STANDARD DRAWINGS |
| BA 1A to BA 3 | PRECAST CONCRETE FULL BARRIER DETAILS – UDOT STANDARD DRAWING |
| FG 6 | CHAINLINK FENCE DETAILS – UDOT STANDARD DRAWING |
| CB 1 | CURB AND GUTTER INLET |
| CB 5A | STANDARD CATCH BASIN AND CLEANOUT BOX |
| CB 5B | STANDARD CATCH BASIN AND CLEANOUT BOX SECTION |
| CB 10A | STANDARD CATCH BASIN AND CLEANOUT BOX SITUATION AND LAYOUT |
| CB 10B | STANDARD CATCH BASIN AND CLEANOUT BOX SECTION DETAILS |
| CB 11 | STANDARD MANHOLE |
| DB 1A | STANDARD DIVERSION BOX/COVERING PLATE/ GRATING FOR 18" DIA OR 24" DIA PIPE |
| DB 1D | STANDARD DIVERSION BOX THREE GATE BOX SECTIONS FOR 18" DIA OR 24" DIA PIPE |
| GF 2 | MANHOLE FRAME AND SOLID COVER |
| GF 3 | RECTANGULAR GRATE AND FRAME |
| GF 6 | MANHOLE STEPS |
| GF 7 | STANDARD SCREW GATE AND FRAME |

| NO. | DATE | DESIGN REQ. BY | WAS LOGIN BY | PARCELS AFFECTED | REQUEST BY | REMARKS |
|---|---|---|---|---|---|---|
| | | | | | | ORIGINAL SUBMISSION FOR AUTHORIZATION |

REVISIONS

SCALE: 1" = 80'

DWG NAME: 1A
SHT SET: ####

DWG CREATED: 05/01/2006
PEN TBL: ¹standard¹¹2¹2600.ctb

LAST UPDATE: 7/25/2006

Jones & DeMille Engineering
1535 South 100 West - Richfield, Utah 84701
Phone (435) 896-8266 Fax (435) 896-8268
www.jonesanddemille.com

| | | | |
|---|---|---|---|
| DESIGN: J.L.A. 05-06 | CHECK: B.R.B. 05-06 | REVIEW | |
| DRAWN: J.L.A. 05-06 | CHECK: B.R.B. 05-06 | DATE: . | |
| QUANT: J.L.A. 05-06 | CHECK: B.R.B. 05-06 | BY: . | |

APPROVAL RECOMM: DATE PROJECT DESIGN ENGINEER

APPROVED: DATE

ENERGY WEST

RILDA CANYON FACILITIES

PHASE I - INDEX TO PLANS

PROJECT NUMBER: 0603-008

EMERY COUNTY

SHEET NO. 1A

# LEGEND

EXISTING WATER LINE
EXISTING WATER VALVE
EXISTING POWER LINE
r/w r/w EXISTING RIGHT OF WAY LINE
EXISTING FENCE LINE
EXISTING CULVERT
FLOW LINE OF DITCH
EXISTING EDGE OF ASPHALT
EXISTING EDGE OF GRAVEL
EXISTING EDGE OF DIRT
EXISTING EDGE OF CONCRETE

EXISTING BUILDING OR SHED
G.W. P.P. P.P. POWER POLE
POWER POLE WITH GUY WIRE
EXISTING TREE
EXISTING DELINEATOR POST
EXISTING STREET SIGN

PROPOSED CLEANOUT MANHOLE
PROPOSED WATER LINE
PROPOSED FENCE LINE
PROPOSED PIPE CULVERT
PROPOSED EDGE OF ASPHALT
PROPOSED EDGE OF CONCRETE
PROPOSED STREET SIGN
PROPOSED CONCRETE
PROPOSED ASPHALT

CUT TOP OF CUT
FILL TOE OF FILL

NORTH ARROW

| | | |
|---|---|---|
| TBC | = | TOP BACK OF CURB |
| FLG | = | FLOW LINE OF GUTTER |
| LOC | = | LIP OF CURB |
| TSW | = | TOP OF SIDEWALK |
| TOC | = | TOP OF CONCRETE |
| EOA | = | EDGE OF ASPHALT |
| TOA | = | TOP OF ASPHALT |
| TOG | = | TOP OF GRATE |
| FLC | = | FLOW LINE OF CULVERT |
| FG | = | FINISHED GROUND |

| NO. | DATE | DESIGN REF. BY | MAPS / CORS BY | PARCELS INSPECTED BY | REQUEST BY | REMARKS |
|---|---|---|---|---|---|---|
| | | ORIGINAL SUBMISSION FOR AUTHORIZATION | | | | |

REVISIONS

SCALE: 1" = 80'
DWG NAME: 18
SHT SET: ####
DWG CREATED: 05/01/2006
PEN TBL: *ashdrd-hp-2850.ctb
LAST UPDATE: 7/25/2006

Jones & DeMille Engineering
1535 South 100 West - Richfield, Utah 84701
Phone (435) 896-8266 Fax (435) 896-8268
www.jonesandsdemille.com

| | | | |
|---|---|---|---|
| DESIGN: | J.L.A. | 05-06 | REVIEW |
| DRAWN: | J.L.A. | 05-06 | DATE: |
| QUANT: | J.L.A. | 05-06 | BY: |

APPROVAL RECOMM. DATE PROJECT DESIGN ENGINEER
APPROVED: DATE

ENERGY WEST
RILDA CANYON FACILITIES
PHASE I - LEGEND
PROJECT NUMBER: 0603-008

EMERY COUNTY

SHEET NO. 1B

# INDEX TO SHEETS

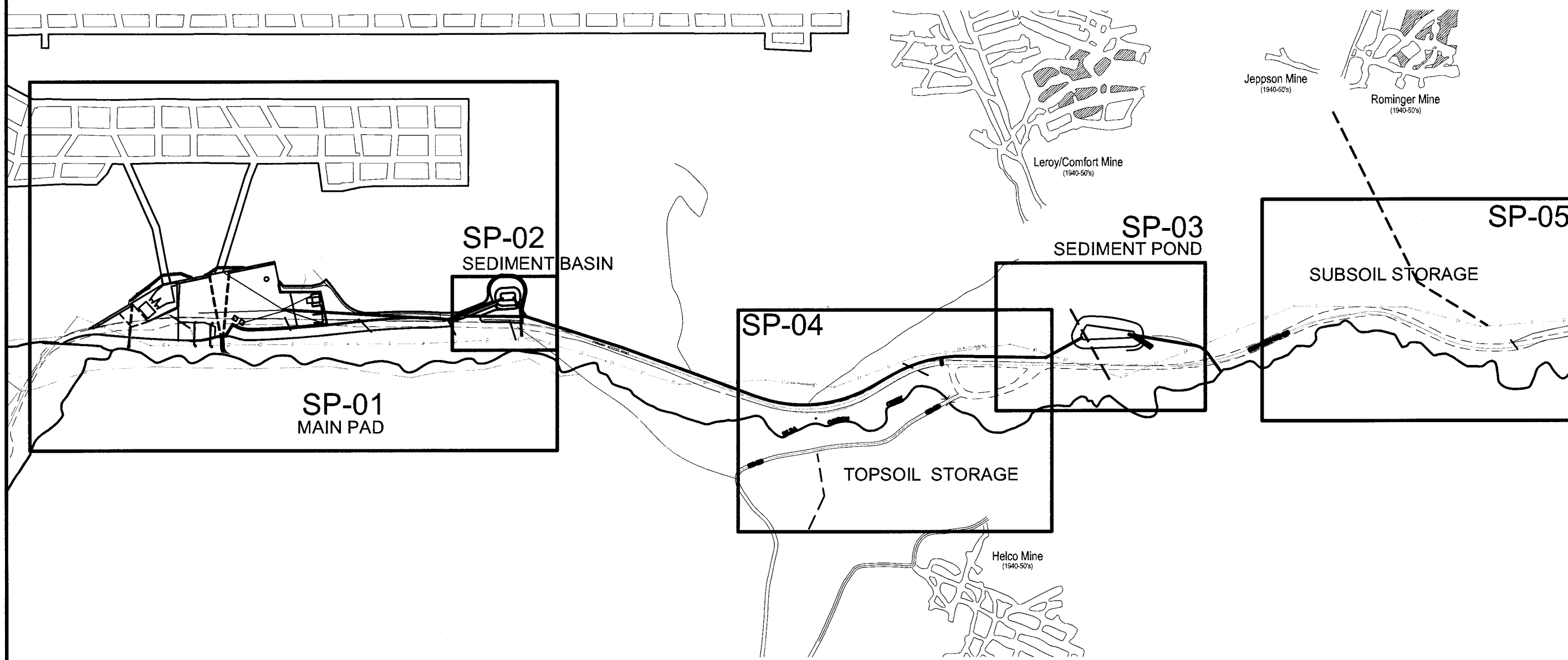


| NO. | DATE | DESIGN REV. BY | MAPS CORR. BY | PARCELS AFFECTED | REQUEST BY | REMARKS |
|---|---|---|---|---|---|---|
| | | ORIGINAL SUBMISSION FOR AUTHORIZATION | | | | |

REVISIONS

SCALE: 1" = 250'

DWG NAME: 1C
SHT SET: ####

DWG CREATED: 05/01/2006
PEN TBL: 1sindch-hp2600.ctb

LAST UPDATE: 7/25/2006


Jones & DeMille Engineering
1535 South 100 West - Richfield, Utah 84701
Phone (435) 896-8266 Fax (435) 896-8268
www.jonesandademille.com


| | | | REVIEW |
|---|---|---|---|
| DESIGN: | J.L.A. | 05-06 | CHECK: B.R.B. 05-06 |
| DRAWN: | J.L.A. | 05-06 | CHECK: B.R.B. 05-06 |
| QUANT: | J.L.A. | 05-06 | CHECK: B.R.B. 05-06 |

DATE: .
BY: .

APPROVAL RECOMM: DATE PROJECT DESIGN ENGINEER
APPROVED: DATE

ENERGY WEST

RILDA CANYON FACILITIES

PHASE I - INDEX TO SHEETS

PROJECT NUMBER: 0603-008

EMERY
COUNTY

SHEET NO. 1C

# TYPICAL SECTION

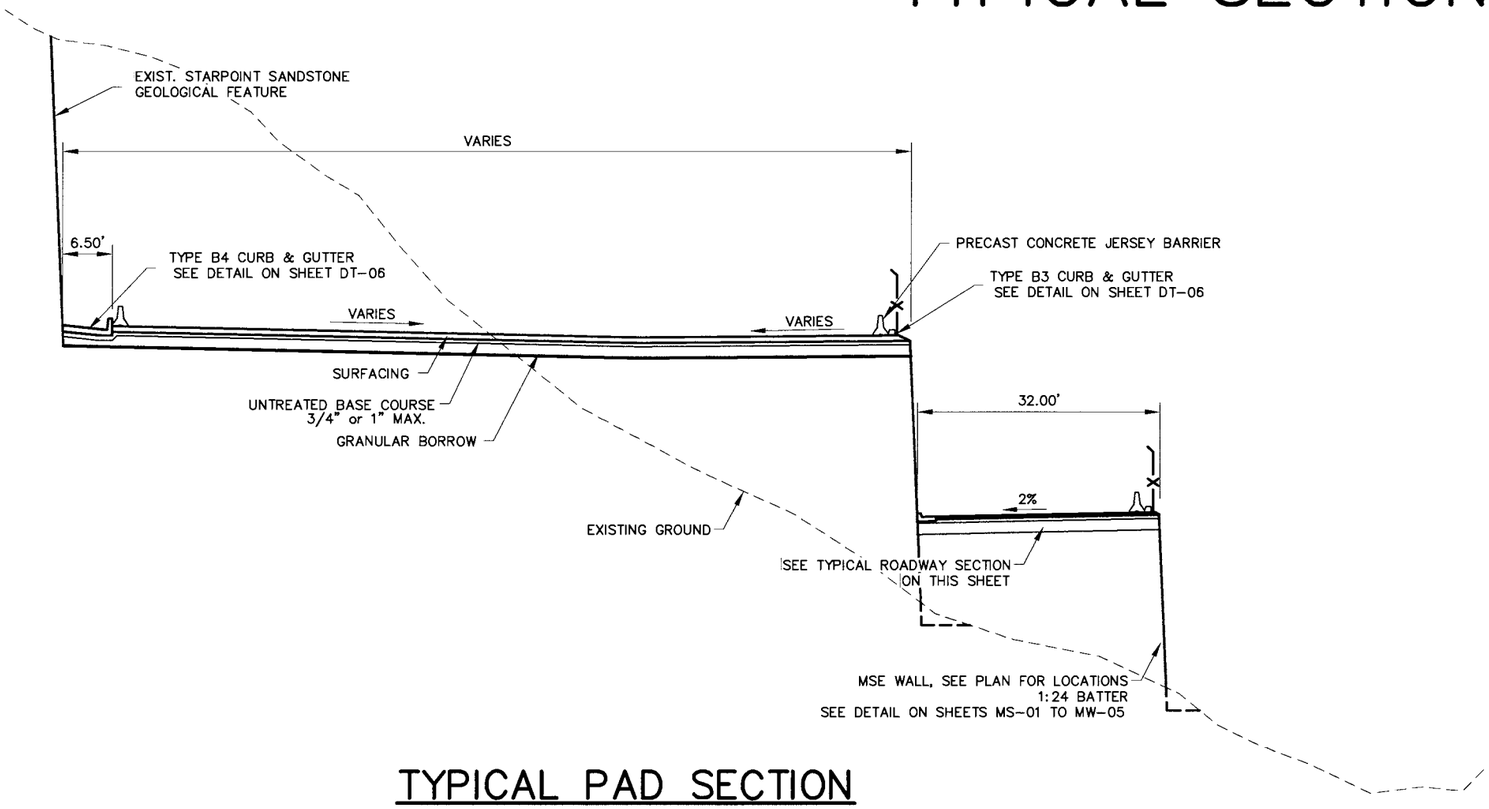


## TYPICAL PAD SECTION

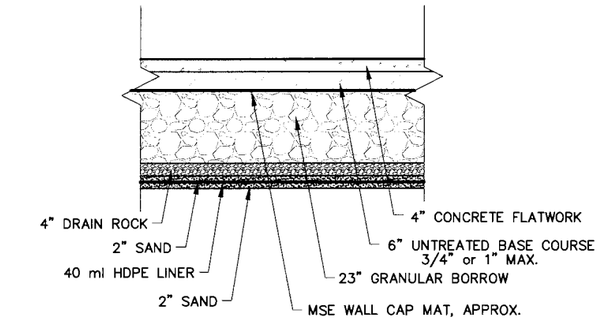


## TYPICAL CONCRETE SECTION
## 4" FLATWORK

NOTE: HDPE LINER NOT REQ'D UNDER FAN FOUNDATION.
ATTACH TO FOUNDATION USING EMBEDS.

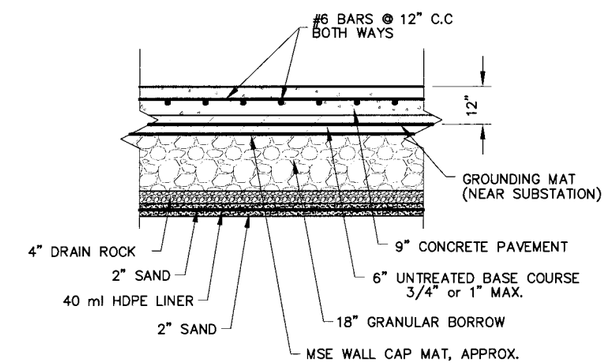


## TYPICAL SECTION
## 9" REINFORCED CONCRETE

NOTE: HDPE LINER NOT REQ'D UNDER SUBSTATION & GROUNDING ROD MAT.
MAINTAIN LINER DRAINAGE AWAY FROM THESE ITEMS.

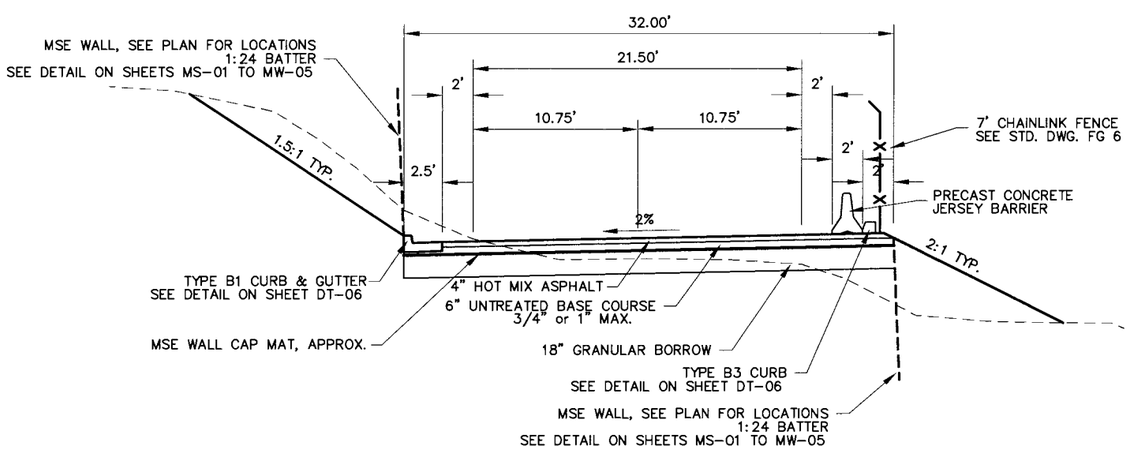


## TYPICAL ROADWAY SECTION

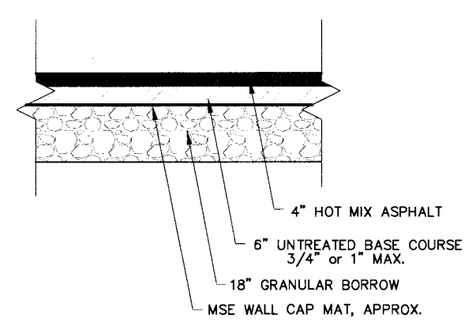


## TYPICAL ASPHALT
## ROADWAY SECTION

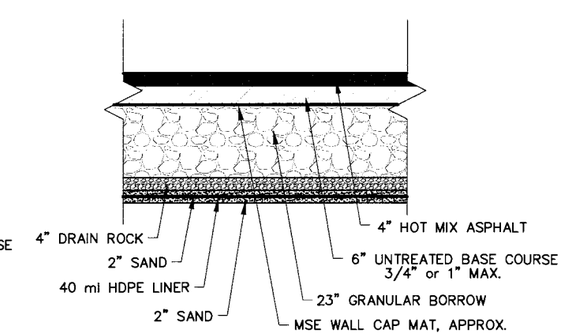


## TYPICAL ASPHALT
## PAD SECTION

| NO. | DATE | DESIGN CORS | MAPS PARCELS | REQUEST BY | REMARKS |
|---|---|---|---|---|---|
| | | ORIGINAL SUBMISSION FOR AUTHORIZATION | | | |

REVISIONS

SCALE: NONE

SHT SET: ####

DWG NAME: TS-01

DWG CREATED: 05/01/2006

PEN TBL: *simdrd-hp2600.ctb

LAST UPDATE: 7/25/2006


Jones & DeMille Engineering
1535 South 100 West - Richfield, Utah 84701
Phone (435) 896-8266 Fax (435) 896-8268
www.jonesandcemille.com


| | | | |
|---|---|---|---|
| DESIGN: J.L.A. 05-06 | CHECK: B.R.B. 05-06 | REVIEW | |
| DRAWN: J.L.A. 05-06 | CHECK: B.R.B. 05-06 | DATE: . | |
| QUANT: J.L.A. 05-06 | CHECK: B.R.B. 05-06 | BY: . | |

APPROVAL RECOMM: DATE PROJECT DESIGN ENGINEER

APPROVED: DATE

ENERGY WEST

RILDA CANYON FACILITIES

PHASE I - TYPICAL SECTIONS

PROJECT NUMBER: 0603-008

EMERY COUNTY

SHEET NO. TS-01

# DETAIL SHEET

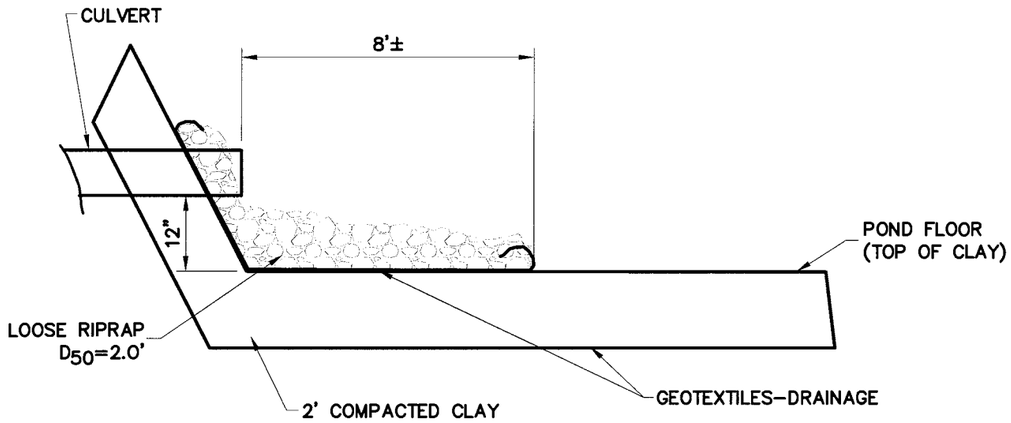


## SEDIMENT BASIN INLET

SEE SHEET SP–02 FOR LOCATION

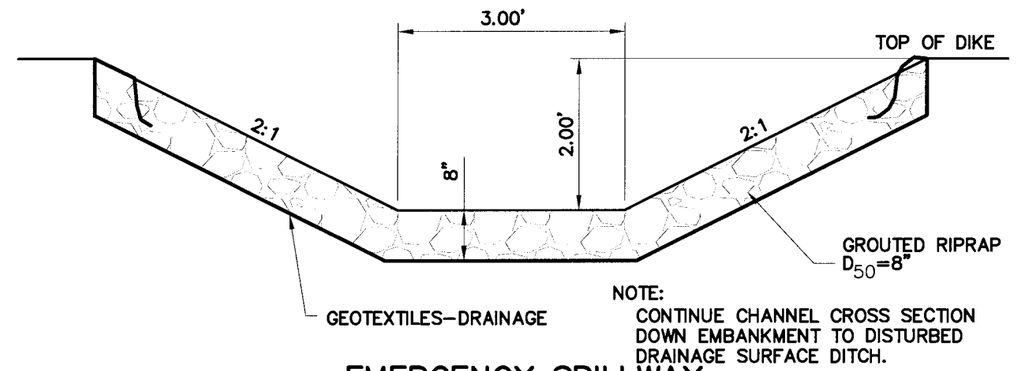


NOTE:
CONTINUE CHANNEL CROSS SECTION DOWN EMBANKMENT TO DISTURBED DRAINAGE SURFACE DITCH.

## EMERGENCY SPILLWAY

AT SEDIMENT BASIN AND SEDIMENT POND

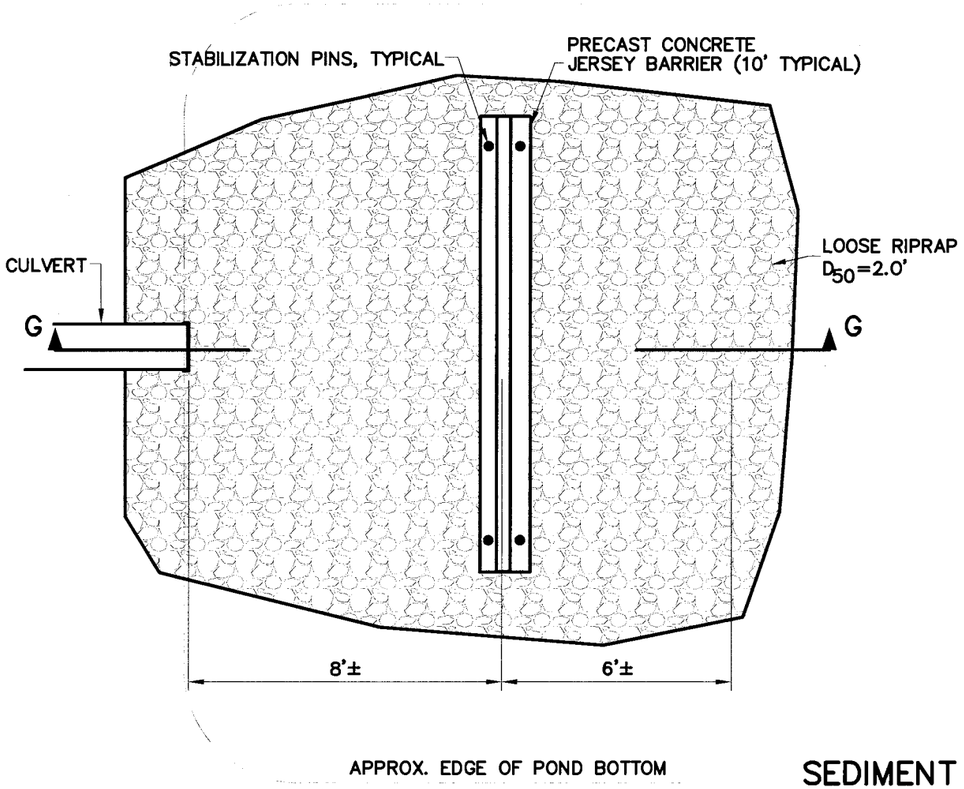


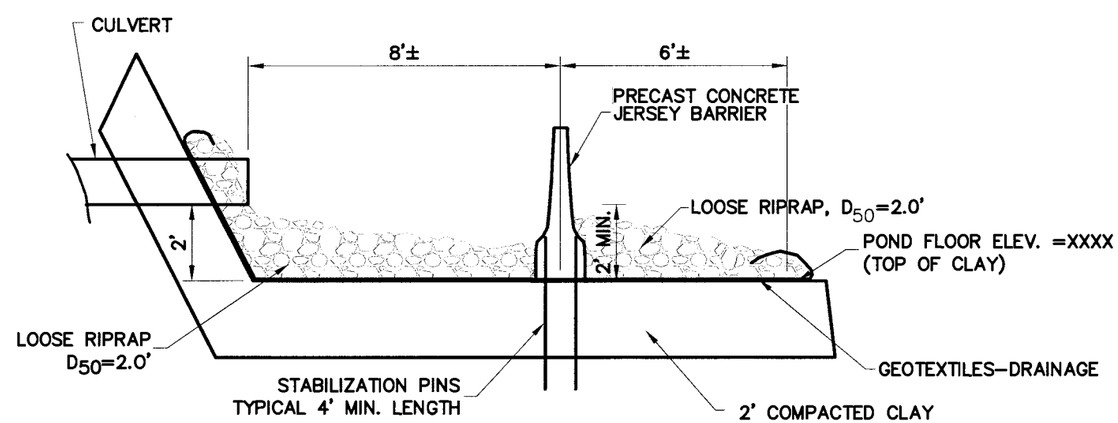


## SECTION G–G
## SEDIMENT POND INLET

## SEDIMENT POND INLET
## ENERGY DISSIPATION

SEE SHEET SP–03 FOR LOCATION

| NO. | DATE | REMARKS |
|---|---|---|
| | | DESIGN MAPS PARCELS RECEIVED |
| | | REVISED CORS PERCENTS BY |
| | | ORIGINAL SUBMISSION FOR AUTHORIZATION |

REVISIONS

DWG CREATED: 05/01/2006 LAST UPDATE: 7/25/2006
PEN TBL: *sandrd-hp2800.ctb
DWG NAME: SKIMMER
SHT SET: ####
SCALE: 1" = 80'


Jones & DeMille Engineering
1535 South 100 West - Richfield, Utah 84701
Phone (435) 896-8266 Fax (435) 896-8268
www.jonesandpartners.com


| | | | |
|---|---|---|---|
| DESIGN: | J.L.A. | 05-06 | CHECK: B.R.B. 05-06 |
| DRAWN: | J.L.A. | 05-06 | CHECK: B.R.B. 05-06 |
| QUANT: | J.L.A. | 05-06 | CHECK: B.R.B. 05-06 |

REVIEW
DATE: -
BY: -

APPROVAL RECOMM: DATE PROJECT DESIGN ENGINEER
APPROVED: DATE

ENERGY WEST
RILDA CANYON FACILITIES
PHASE I - DETAIL SHEET
PROJECT NUMBER: 0603-008

EMERY
COUNTY

SHEET NO. DT-01

# DETAIL SHEET

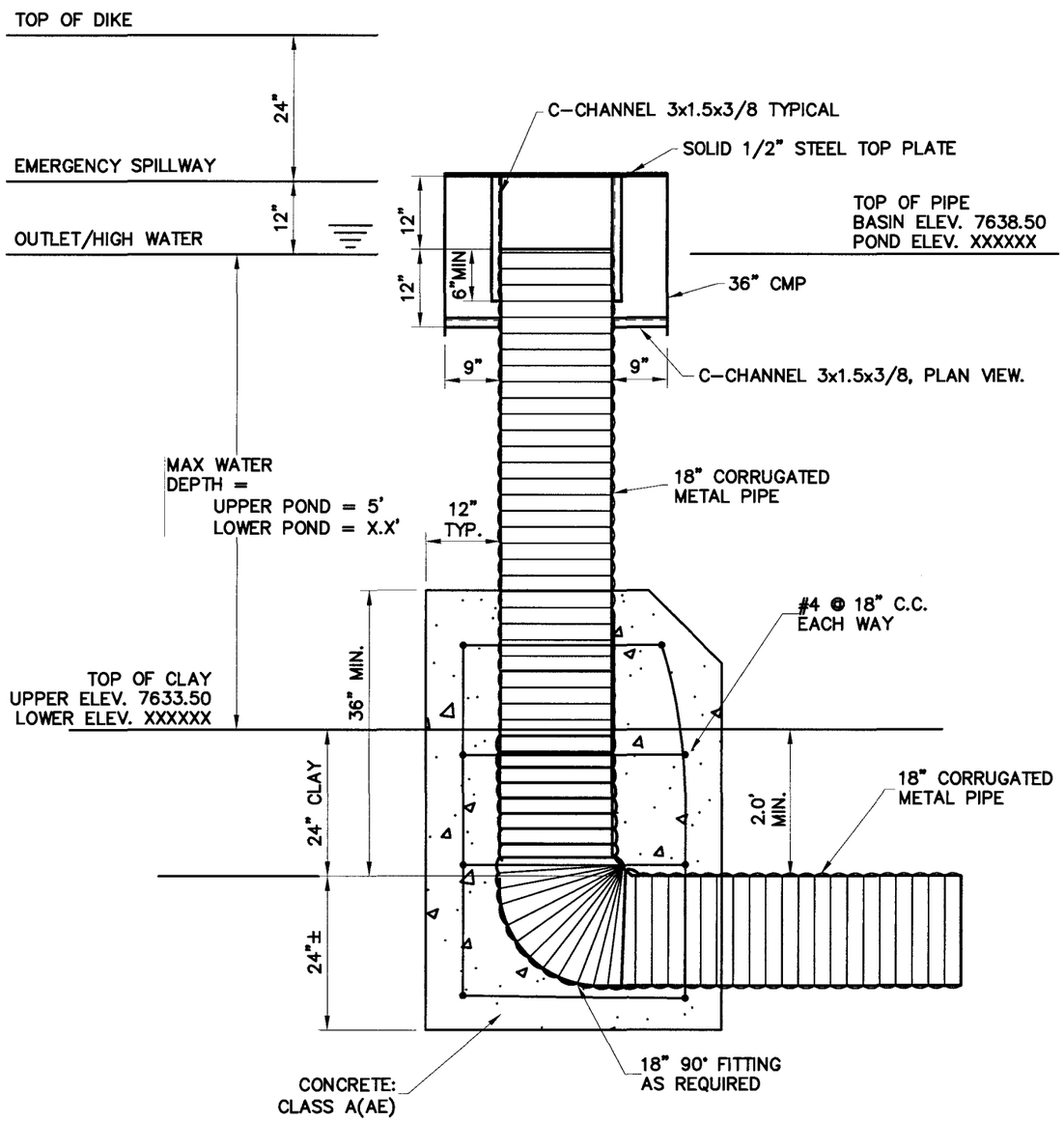


SECTION A–A
OIL SKIMMER DETAIL

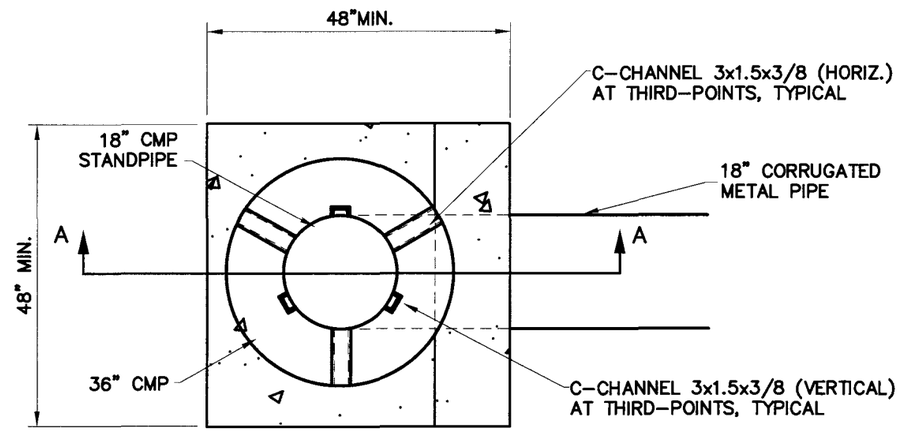


PLAN VIEW
OIL SKIMMER DETAIL

## BASIN/POND PRIMARY OUTLET

NOTE: OIL SKIMMER REQ'D ON SEDIMENT POND ONLY.

| NO. | DATE | DESIGN REVISION | WORK PERFORMED BY | PROJECT REQUEST CORR. BY | REMARKS |
|---|---|---|---|---|---|
| | | ORIGINAL SUBMISSION FOR AUTHORIZATION | | | |

REVISIONS

SCALE: 1" = 80'

DWG NAME: SKIMMER
SHT SET: ####

DWG CREATED: 05/01/2006
PEN TBL: ...\smnd\42b800.ctb

LAST UPDATE: 7/25/2006


Jones & DeMille Engineering
1535 South 100 West - Richfield, Utah 84701
Phone (435) 896-8266 Fax (435) 896-5268
www.jonesandDemille.com


| | | | |
|---|---|---|---|
| DESIGN: J.L.A. 05-06 | CHECK: B.R.B. 05-06 | REVIEW | |
| DRAWN: J.L.A. 05-06 | CHECK: B.R.B. 05-06 | DATE: | |
| QUANT: J.L.A. 05-06 | CHECK: B.R.B. 05-06 | BY: | |

APPROVAL RECOMM: _____ DATE _____ PROJECT DESIGN ENGINEER
APPROVED: _____ DATE

ENERGY WEST
RILDA CANYON FACILITIES
PHASE I - DETAIL SHEET
PROJECT NUMBER: 0603-008

EMERY
COUNTY

SHEET NO. DT-02

# DETAIL SHEET

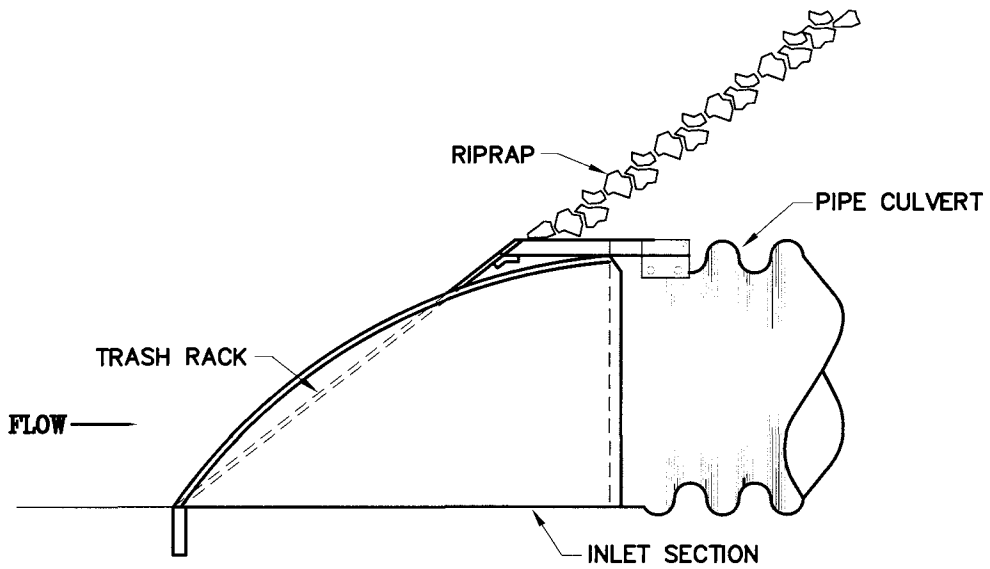


SIDE VIEW

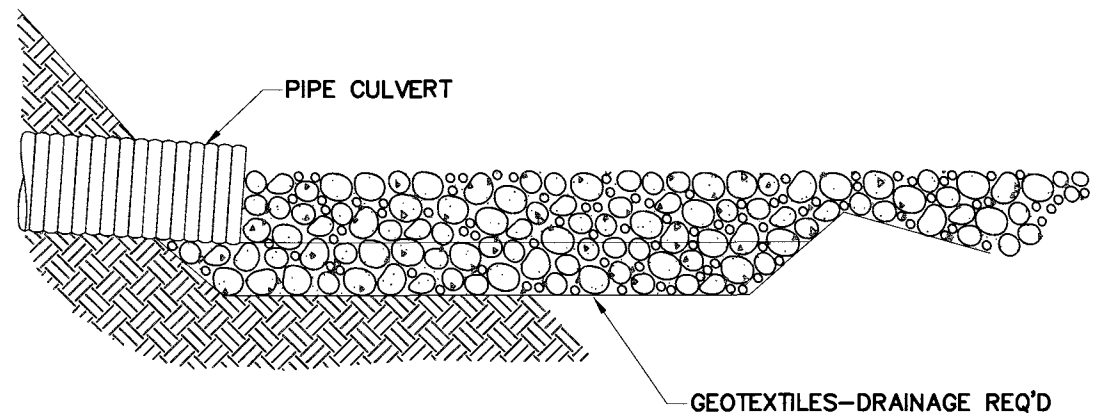


SECTION C–C

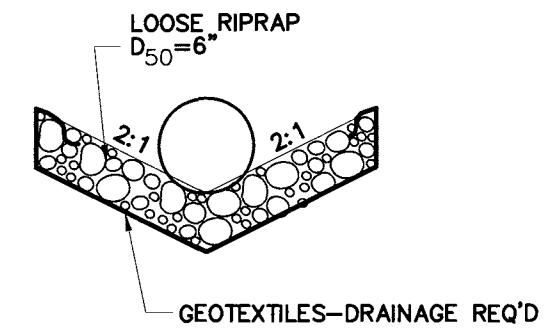


SECTION D–D

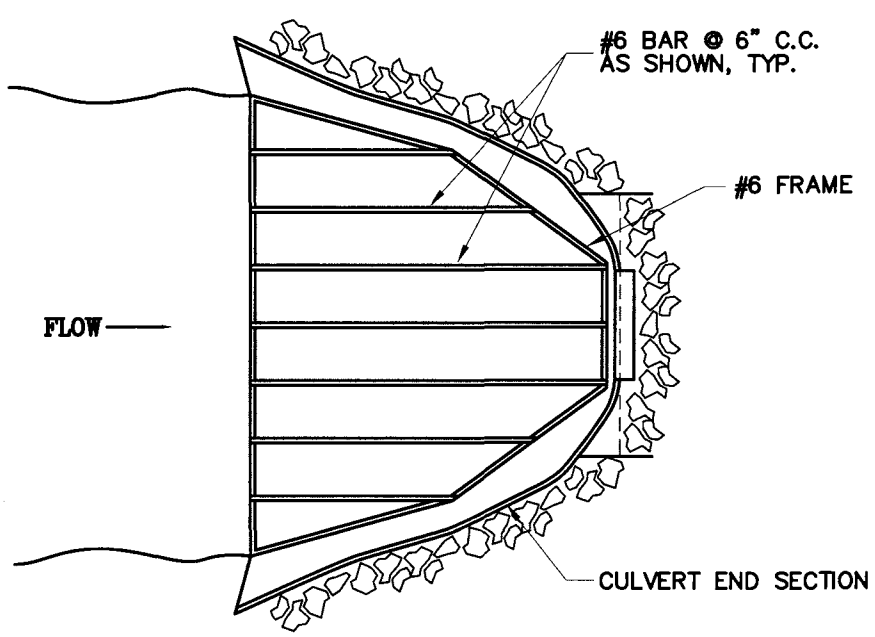


PLAN VIEW
TRASH RACK

CULVERT INLET

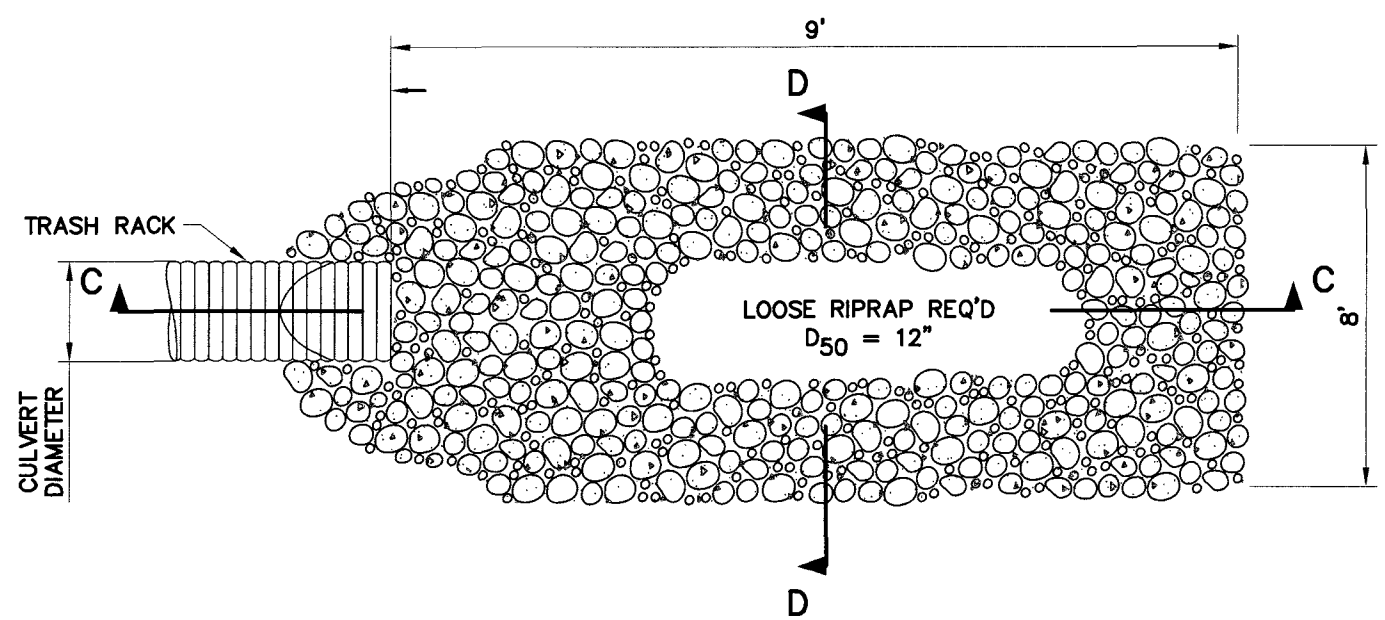


PLAN VIEW

CULVERT OUTLET

| NO. | DATE | REMARKS |
|---|---|---|
| | | DESIGN REVISIONS BY: J.L.A. CORR. BY: B.R.B. PARCELS REQUEST REVISIONS BY: |
| | | ORIGINAL SUBMISSION FOR AUTHORIZATION |

SCALE: 1" = 80'
DWG NAME: DETAILS
SHT SET: ####
DWG CREATED: 05/01/2006
PEN TBL: standard-2000.ctb
LAST UPDATE: 7/25/2006


Jones & DeMille Engineering
1535 South 100 West - Richfield, Utah 84701
Phone (435) 896-8266 Fax (435) 896-8268
www.jonesanddemille.com


| | | | |
|---|---|---|---|
| DESIGN: J.L.A. 05-06 | CHECK: B.R.B. 05-06 | REVIEW | |
| DRAWN: J.L.A. 05-06 | CHECK: B.R.B. 05-06 | DATE: | |
| QUANT: J.L.A. 05-06 | CHECK: B.R.B. 05-06 | BY: | |

APPROVAL RECOMM: DATE PROJECT DESIGN ENGINEER
APPROVED: DATE

ENERGY WEST
RILDA CANYON FACILITIES
PHASE I - DETAIL SHEET
PROJECT NUMBER: 0603-008

EMERY
COUNTY

SHEET NO. DT-03

# DETAIL SHEET

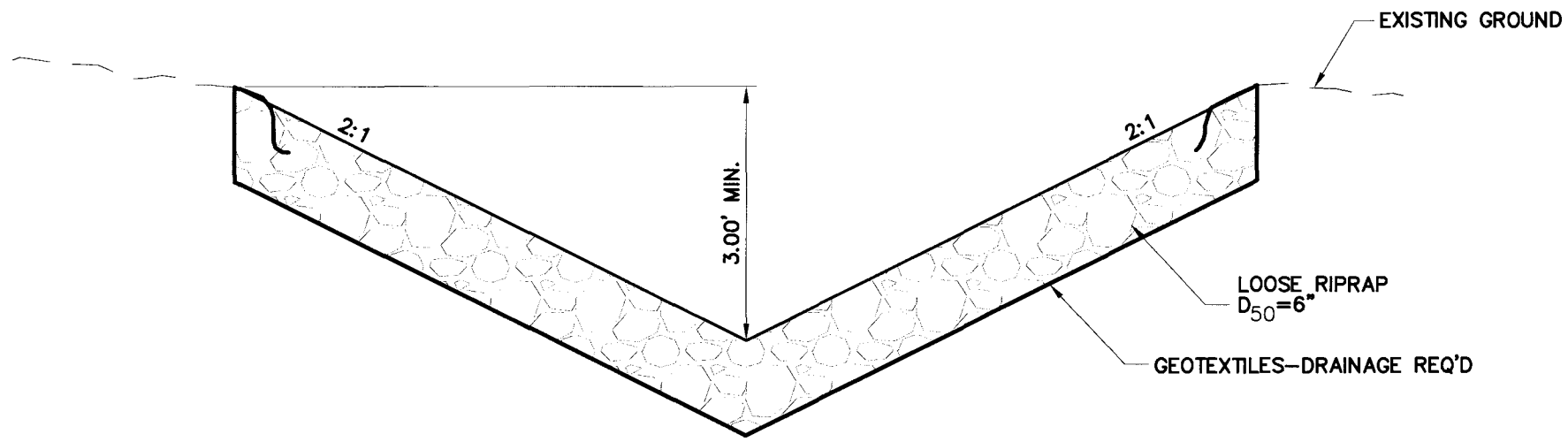


## UNDISTURBED DITCH TYPE I

NOTE: RIPRAP REQ'D IN AREAS WHERE DITCH FLOWLINE GRADES EXCEED 5%.

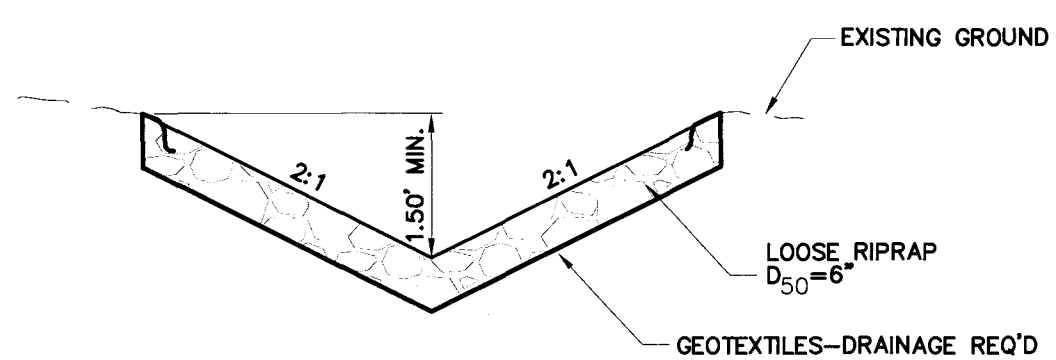


## UNDISTURBED DITCH TYPE II

NOTE: RIPRAP REQ'D IN AREAS WHERE DITCH FLOWLINE GRADES EXCEED 5%.

| NO. | DATE | REMARKS |
|---|---|---|
| | DESIGN MAPS BY: | |
| | RELEASED FOR CONSTRUCTION | |
| | PARCELS REQUEST BY: | |
| | ORIGINAL SUBMISSION FOR AUTHORIZATION | |

REVISIONS

SCALE: 1" = 80'

DWG NAME: DETAILS
SHT SET: ####

DWG CREATED: 05/01/2006
PEN TBL: 18mm24x9200.ctb

LAST UPDATE: 7/25/2006


Jones & DeMille Engineering
1535 South 100 West - Richfield, Utah 84701
Phone (435) 896-8266 Fax (435) 896-8268
www.jonesanddemille.com


| | | | |
|---|---|---|---|
| DESIGN: J.L.A. 05-06 | CHECK: B.R.B. 05-06 | REVIEW | |
| DRAWN: J.L.A. 05-06 | CHECK: B.R.B. 05-06 | DATE: | |
| DUANT: J.L.A. 05-06 | CHECK: B.R.B. 05-06 | BY: | |

APPROVAL RECOMM: DATE PROJECT DESIGN ENGINEER

APPROVED: DATE

ENERGY WEST

RILDA CANYON FACILITIES

PHASE I - DETAIL SHEET

PROJECT NUMBER: 0603-008

EMERY COUNTY

SHEET NO. DT-04

# DETAIL SHEET

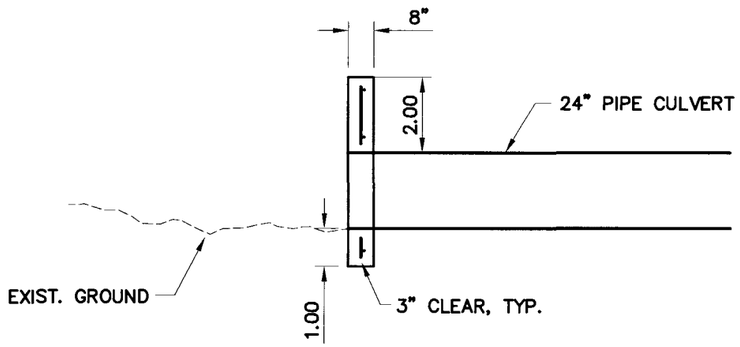


SECTION A–A

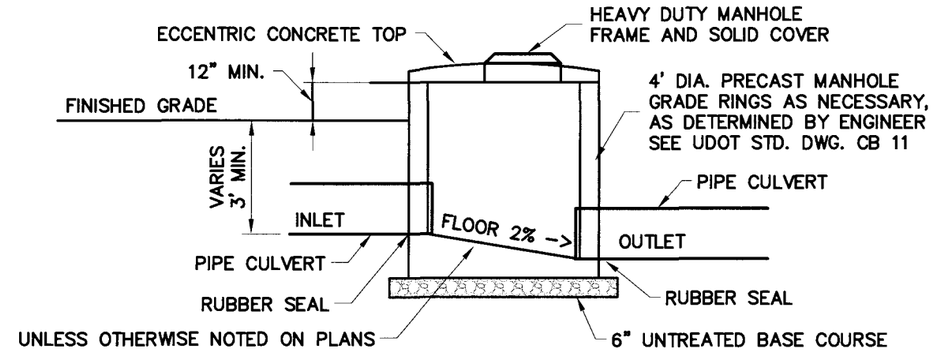


SECTION B–B

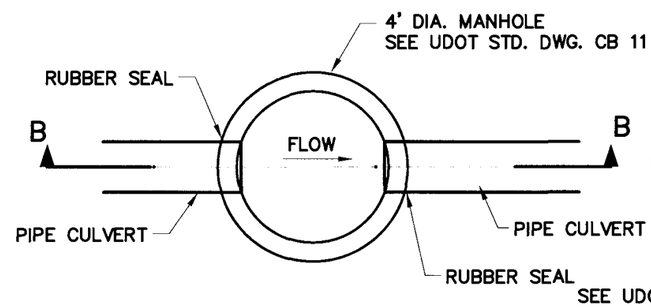


PLAN VIEW

TYPE I

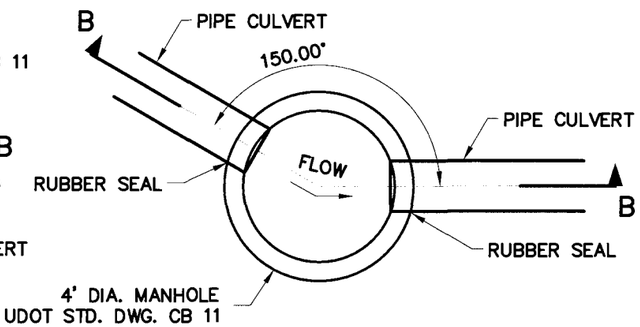


PLAN VIEW

TYPE II

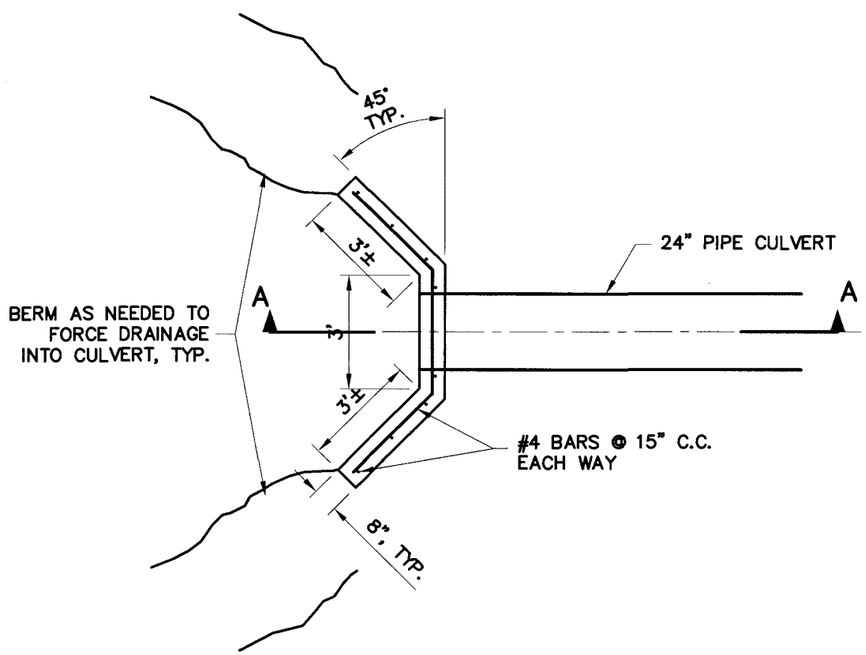


PLAN VIEW

UNDISTURBED DRAINAGE CULVERT HEADWALL

NOTE: GRADE TO DRAIN.

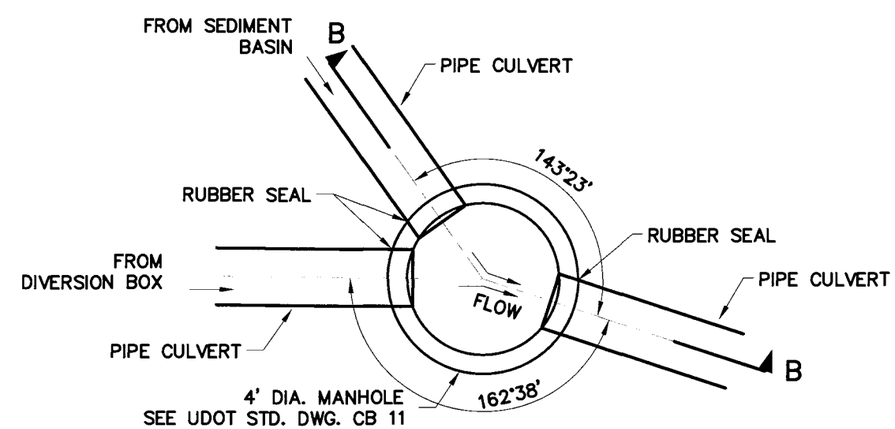


PLAN VIEW

TYPE III

CLEANOUT MANHOLES

NOTE: CONNECT PIPE THRU MANHOLE IF HDPE PIPE IS USED.
CUTOUT TOP HALF OF PIPE INSIDE MANHOLE.

| NO. | DATE | REMARKS |
|---|---|---|
| | | DESIGN MAPS / PARCELS REQUEST BEFORE CONSTRUCTION |
| | | ORIGINAL SUBMISSION FOR AUTHORIZATION |

REVISIONS

SCALE: 1" = 80'

DWG NAME: DETAILS1
SHT SET: ####

DWG CREATED: 05/01/2006
PEN TBL: 1sinbrd-hp2600.ctb

LAST UPDATE: 7/25/2006


Jones & DeMille Engineering
1535 South 100 West - Richfield, Utah 84701
Phone (435) 896-8266 Fax (435) 896-8268
www.jonesanddemille.com


| | | | |
|---|---|---|---|
| DESIGN: J.L.A. 05-06 | CHECK: B.R.B. 05-06 | REVIEW | |
| DRAWN: J.L.A. 05-06 | CHECK: B.R.B. 05-06 | DATE: | |
| QUANT: J.L.A. 05-06 | CHECK: B.R.B. 05-06 | BY: | |

APPROVAL RECOMM: DATE PROJECT DESIGN ENGINEER

APPROVED: DATE

ENERGY WEST

RILDA CANYON FACILITIES

PHASE I - DETAIL SHEET

PROJECT NUMBER: 0603-008

EMERY COUNTY

SHEET NO. DT-05

# DETAIL SHEET

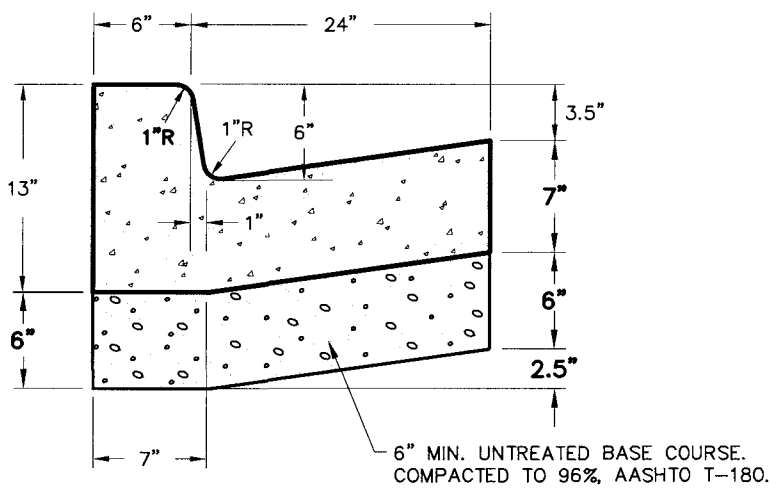


## TYPE B1 CURB & GUTTER

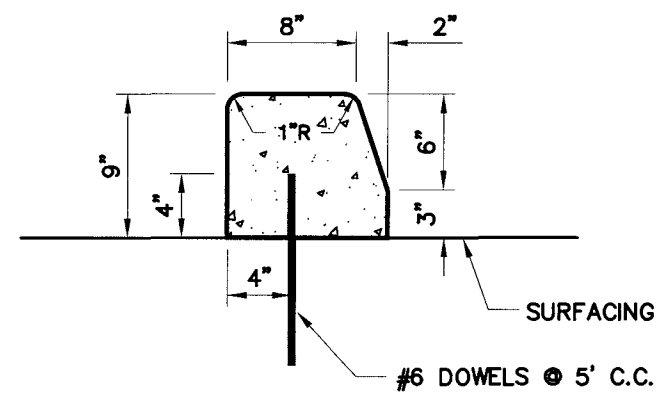


## TYPE B3 CURB

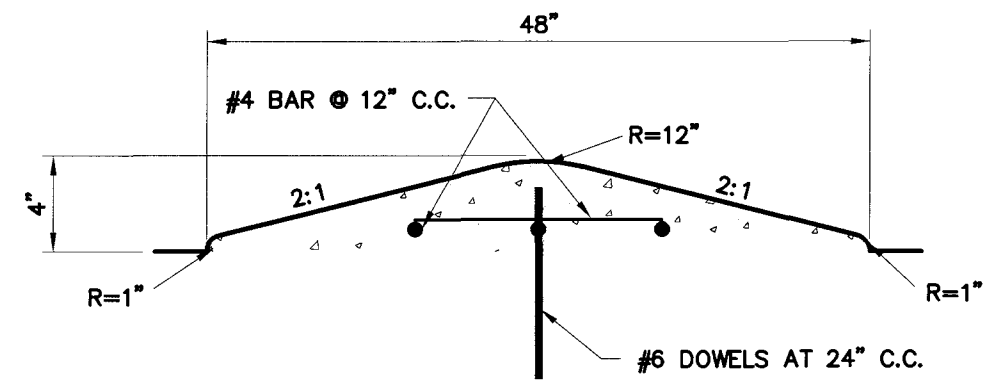


## PAD DRAINAGE CONTROL BUMP

1. SEE LOCATION ON SHEET SP-01
2. MONOLITHIC w/CONCRETE PAVEMENT
3. 2" CLEAR, MIN.

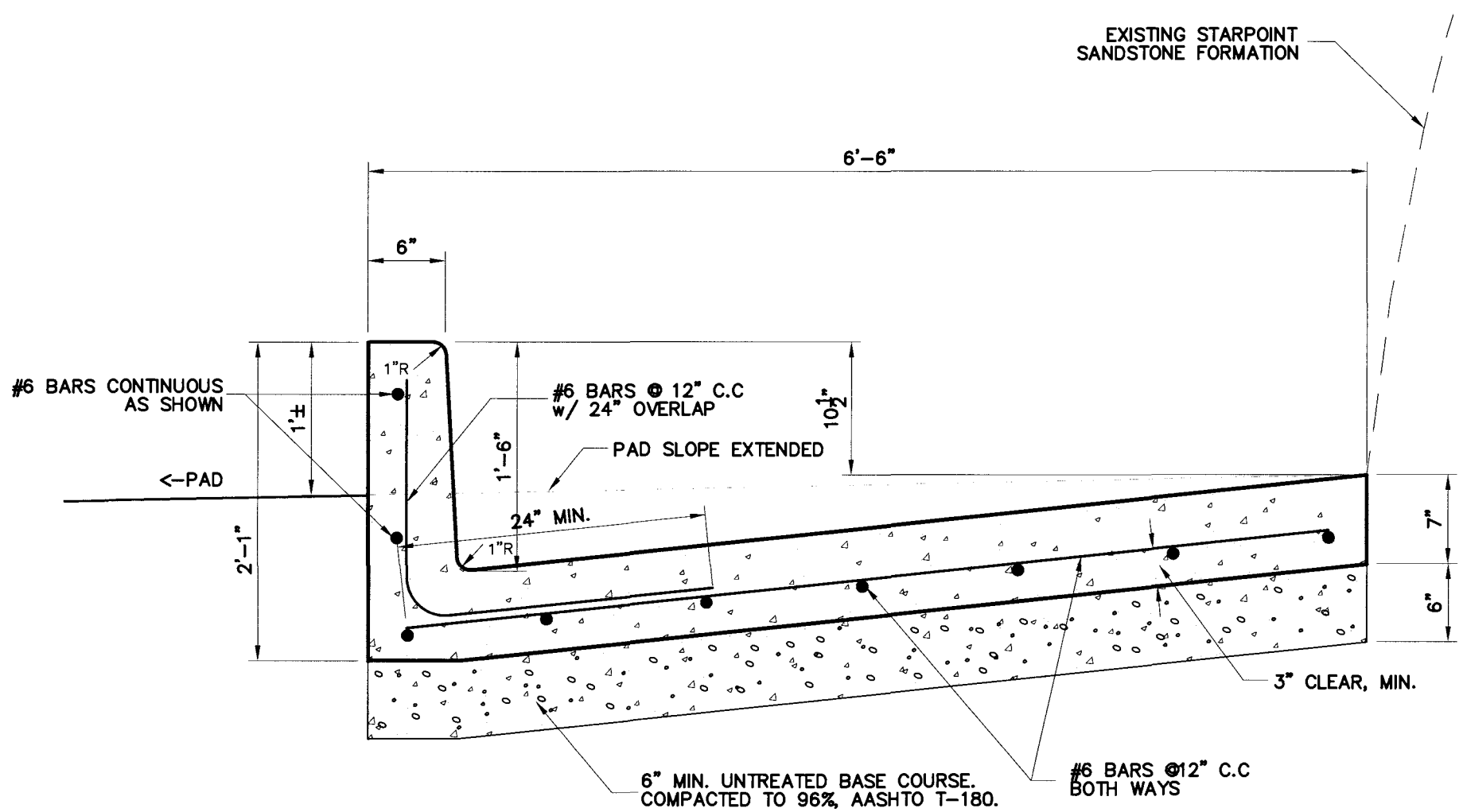


## TYPE B4 CURB & GUTTER

NOTE: ALL CONCRETE CLASS AA(AE)
UNLESS NOTED OTHERWISE.

| NO. | DATE | REMARKS |
|---|---|---|
| | | DESIGN MODIFICATIONS BY: MARS, CORP. PARCELS REQUEST BY: |
| | | ORIGINAL SUBMISSION FOR AUTHORIZATION |

REVISIONS

SCALE: 1" = 80'
DWG NAME: DETAILS
SHT SET: ####
DWG CREATED: 05/01/2006
PEN TBL: rstndd-hp2600.tb
LAST UPDATE: 7/25/2006


Jones & DeMille Engineering
1535 South 100 West - Richfield, Utah 84701
Phone (435) 896-8266 Fax (435) 896-8268
www.jonesandpemile.com


| | | | |
|---|---|---|---|
| DESIGN: J.L.A. 05-06 | CHECK: B.R.B. 05-06 | REVIEW | |
| DRAWN: J.L.A. 05-06 | CHECK: B.R.B. 05-06 | DATE: | |
| QUANT: J.L.A. 05-06 | CHECK: B.R.B. 05-06 | BY: | |

APPROVAL RECOMM: DATE PROJECT DESIGN ENGINEER
APPROVED: DATE

ENERGY WEST
RILDA CANYON FACILITIES
PHASE I - DETAIL SHEET
PROJECT NUMBER: 0603-008

EMERY
COUNTY

SHEET NO. DT-06

# DETAIL SHEET

NOTE: ALL STEEL PLATE GRADE 50

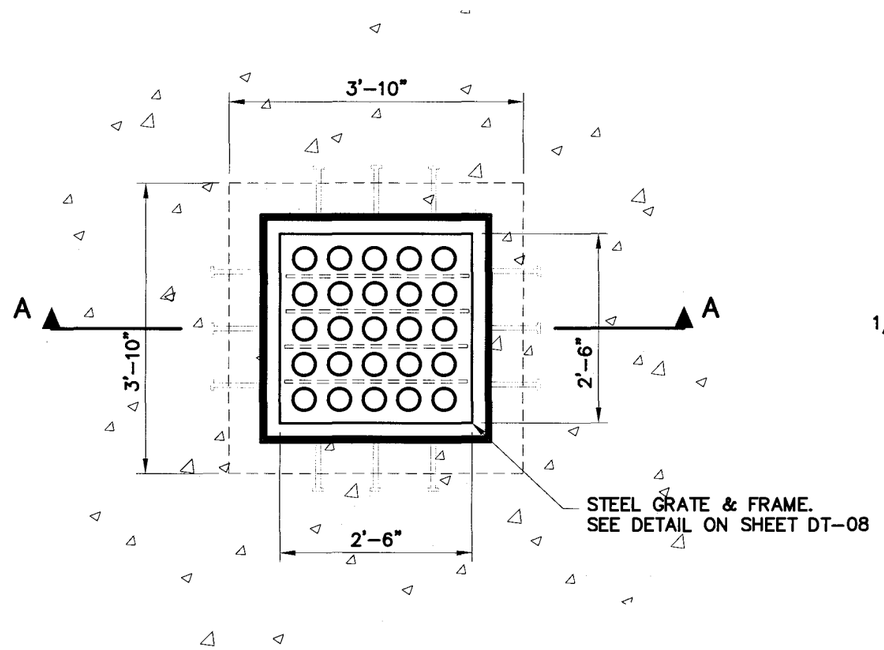


PLAN

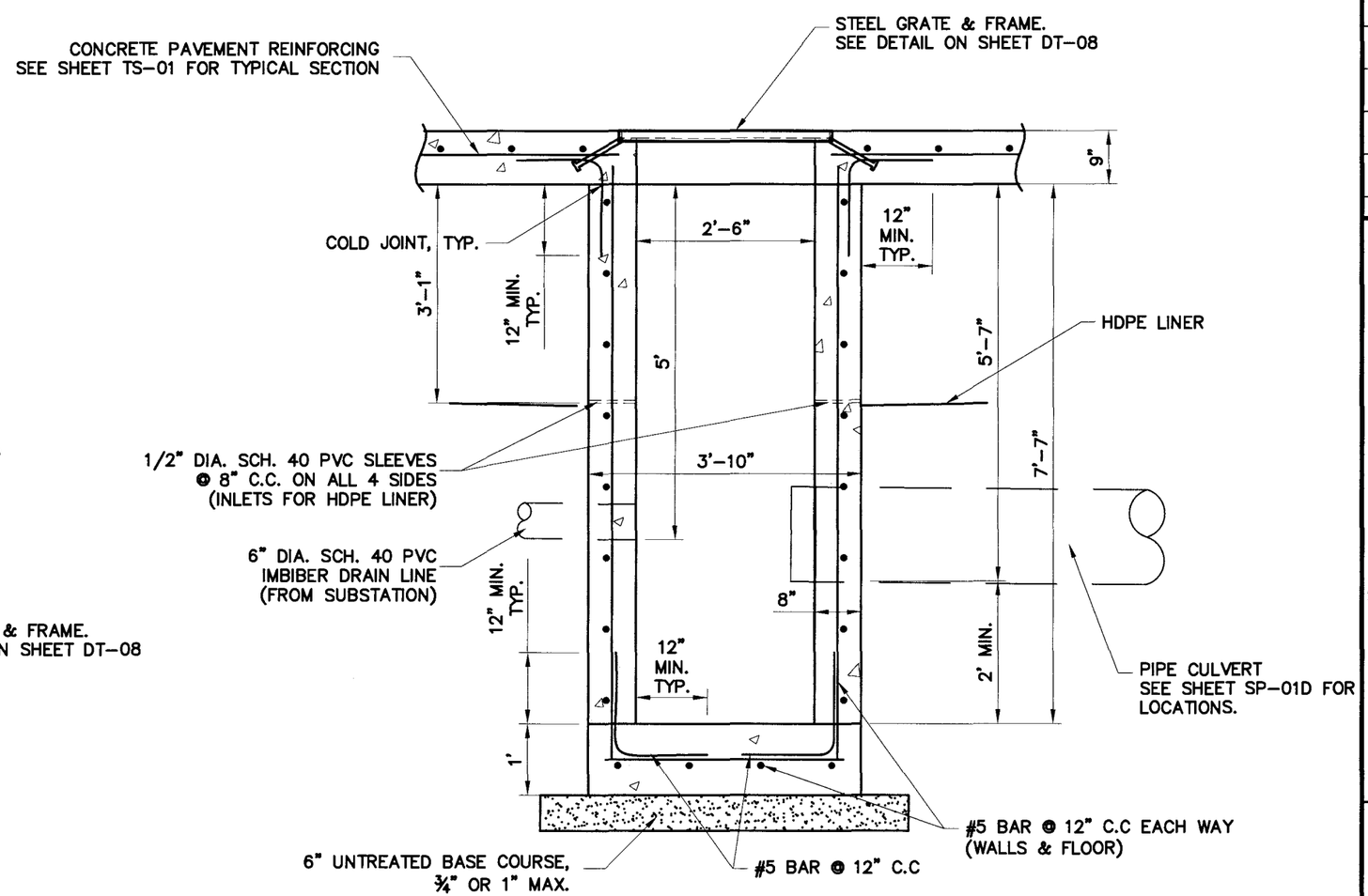


SECTION A-A

## SECTION THRU DROP INLET

| NO. | DATE | DESIGN REV. BY | MARK CORR. BY | PARCELS AFFECTED | REQUEST BY | REMARKS |
|---|---|---|---|---|---|---|
| | | | | | | ORIGINAL SUBMISSION FOR AUTHORIZATION |

REVISIONS

SCALE: 1" = 2'

DWG NAME: DETAILS
SHT SET: ####

DWG CREATED: 05/01/2006
PEN TBL: ctb\rpd-b-2000.ctb

LAST UPDATE: 7/25/2006


Jones & DeMille Engineering
1535 South 100 West - Richfield, Utah 84701
Phone (435) 896-8266 Fax (435) 896-8268
www.jonesandsemile.com


| | | | |
|---|---|---|---|
| DESIGN: J.L.A. 05-06 | CHECK: B.R.B. 05-06 | REVIEW | |
| DRAWN: J.L.A. 05-06 | CHECK: B.R.B. 05-06 | DATE: | |
| QUANT: J.L.A. 05-06 | CHECK: B.R.B. 05-06 | BY: | |

APPROVAL RECOMM: _____ DATE _____ PROJECT DESIGN ENGINEER

APPROVED: _____ DATE _____

ENERGY WEST

RILDA CANYON FACILITIES

PHASE I - DETAIL SHEET

PROJECT NUMBER: 0603-008

EMERY
COUNTY

SHEET NO. DT-07

# DETAIL SHEET

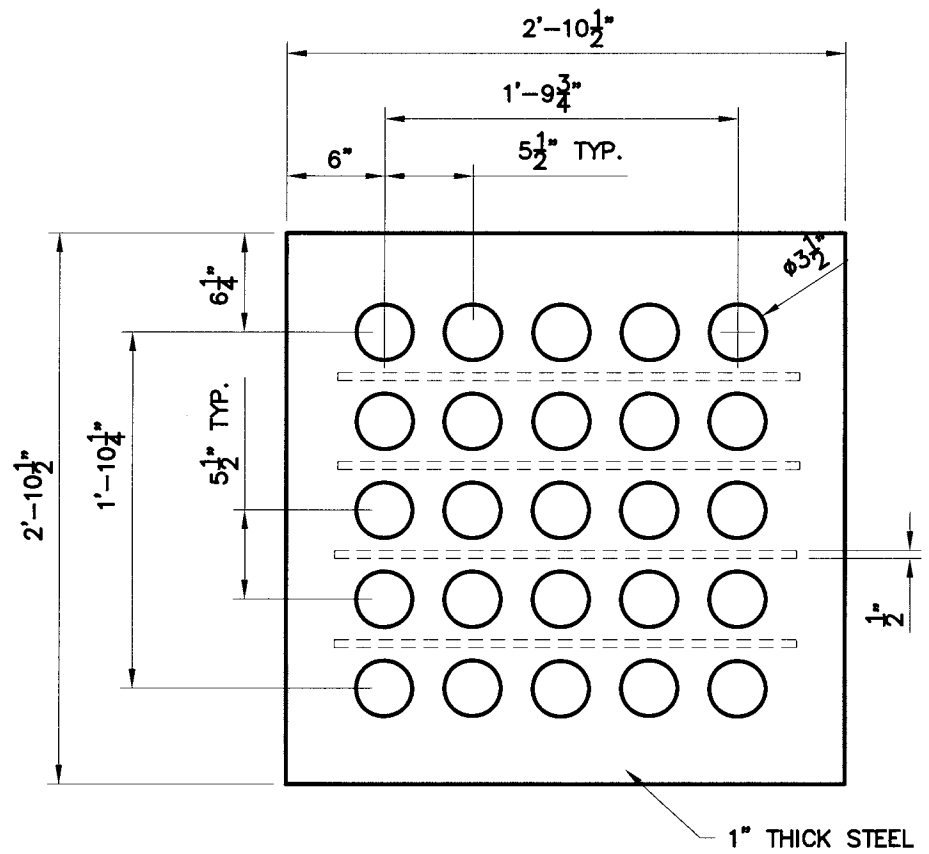


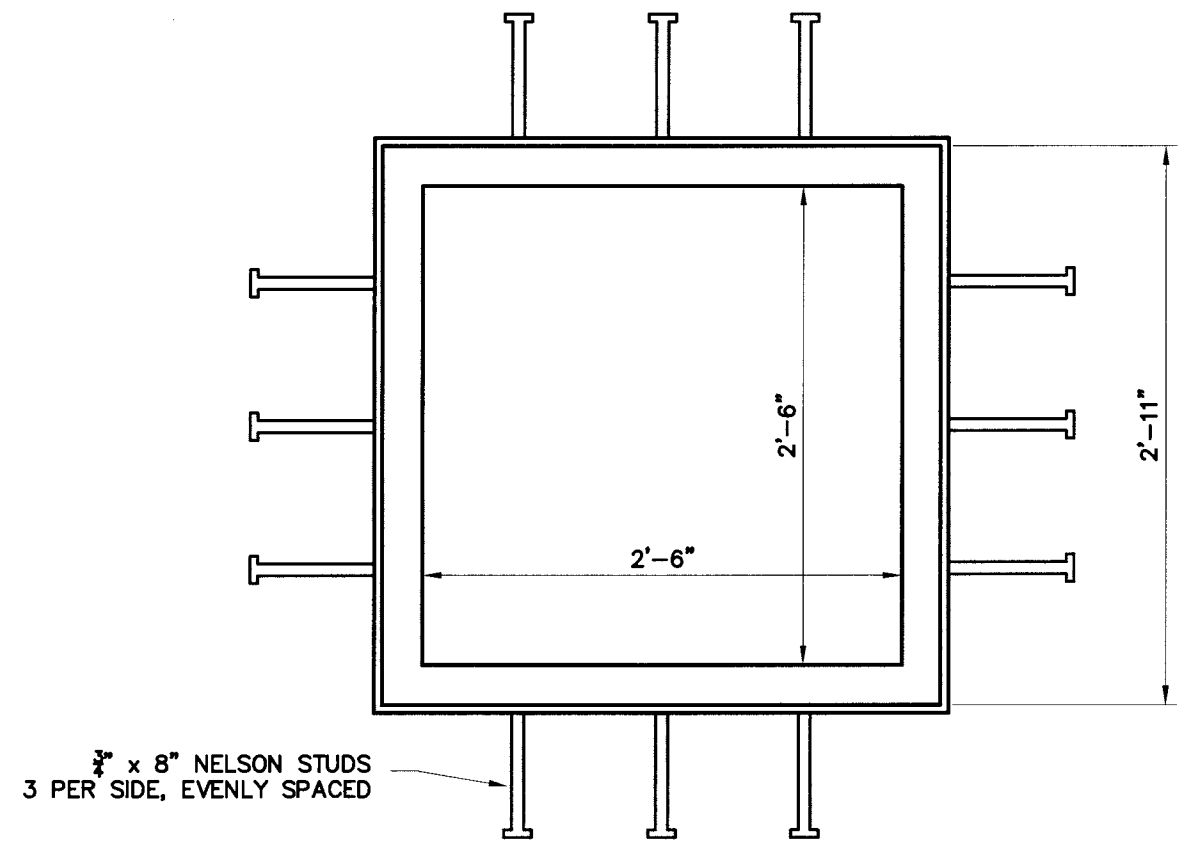


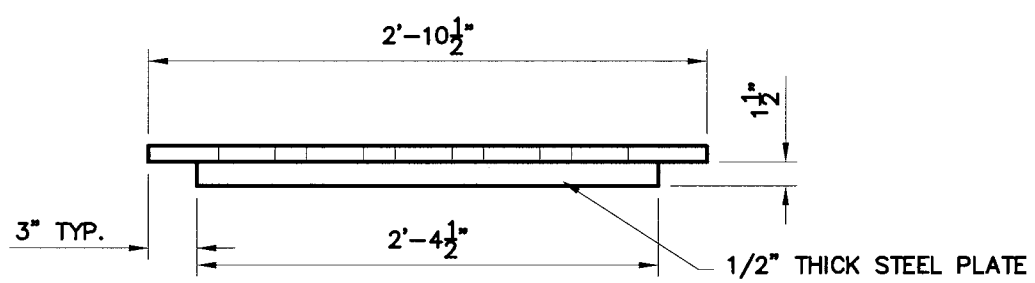


GRATE SECTION

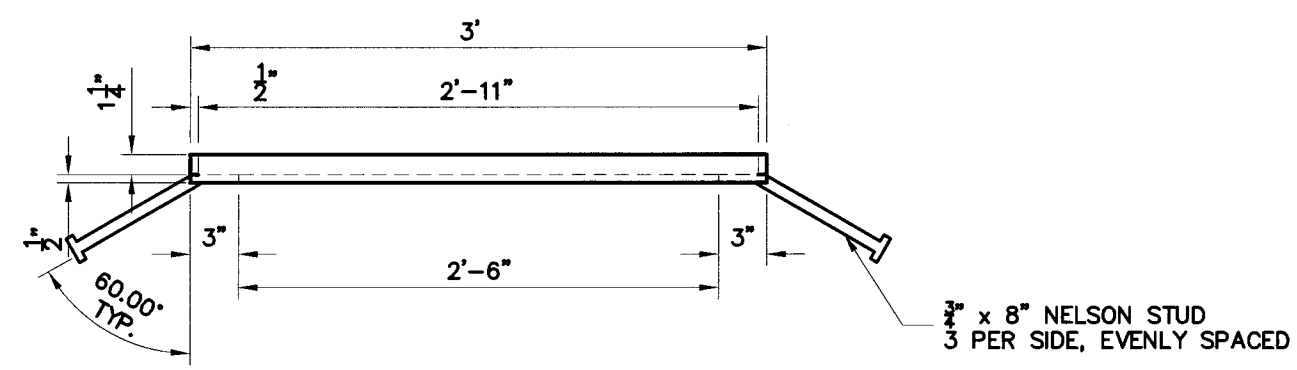


FRAME SECTION

## 27" DRAIN GRATE & FRAME

NOTE: ALL STEEL PLATE GRADE 60

| NO. | DATE | REVISION REQUIRED BY | MADE / PROCESS REQUEST CORR. BY | REMARKS |
|---|---|---|---|---|
| | | ORIGINAL SUBMISSION FOR AUTHORIZATION | | |

REVISIONS

SCALE: 1" = 80'

DWG NAME: DETAILS
SHT SET: ####

DWG CREATED: 05/01/2006
PEN TBL: 1stgrid-24g2600r.ctb

LAST UPDATE: 7/25/2006


Jones & DeMille Engineering
1535 South 100 West - Richfield, Utah 84701
Phone (435) 896-8266 Fax (435) 896-8268
www.jonesandDemille.com


| | | | |
|---|---|---|---|
| DESIGN: | J.L.A. 05-06 | CHECK: | B.R.B. 05-06 |
| DRAWN: | J.L.A. 05-06 | CHECK: | B.R.B. 05-06 |
| QUANT: | J.L.A. 05-06 | CHECK: | B.R.B. 05-06 |

REVIEW
DATE:
BY:

APPROVAL RECOMM: DATE
PROJECT DESIGN ENGINEER
APPROVED: DATE

ENERGY WEST

RILDA CANYON FACILITIES

PHASE I - DETAIL SHEET

PROJECT NUMBER: 0603-008

EMERY
COUNTY

SHEET NO. DT-08

# DETAIL SHEET

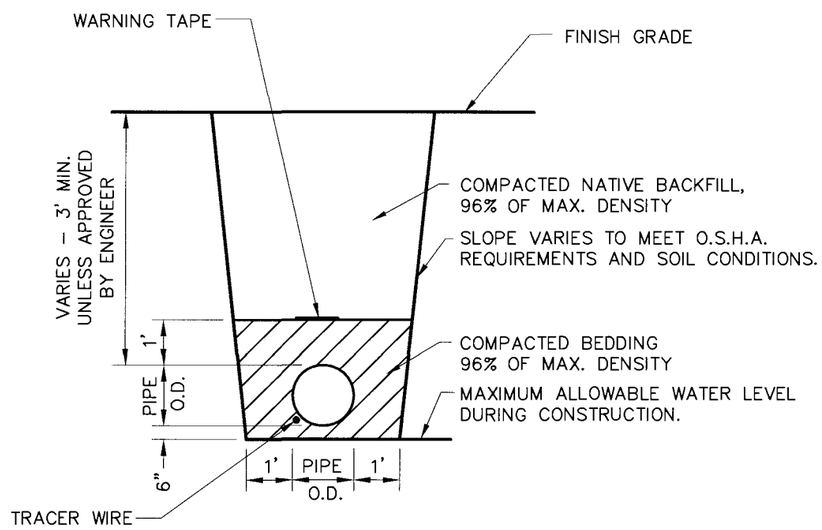


## TRENCH DETAIL

NOTE: 1. INSTALL PIPE AT GREATER DEPTH AS NECESSARY TO AVOID CONFLICTS WITH OTHER UTILITIES, CULVERTS, OR OTHER OBSTACLES.
2. COMPACTED BEDDING TO CONSIST OF NATIVE OR IMPORTED MATERIAL. NO ROCKS LARGER THAN 2" WITHIN 6" OF PIPE WALL.

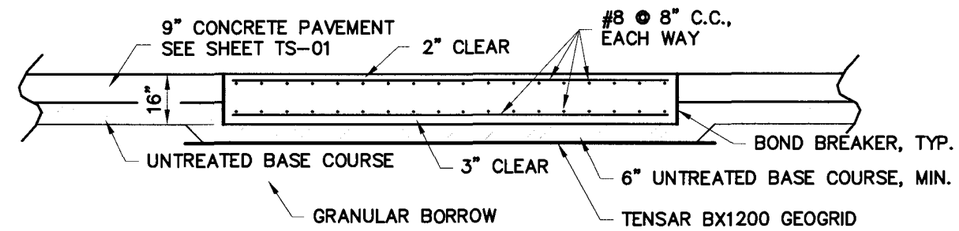


## SECTION B–B

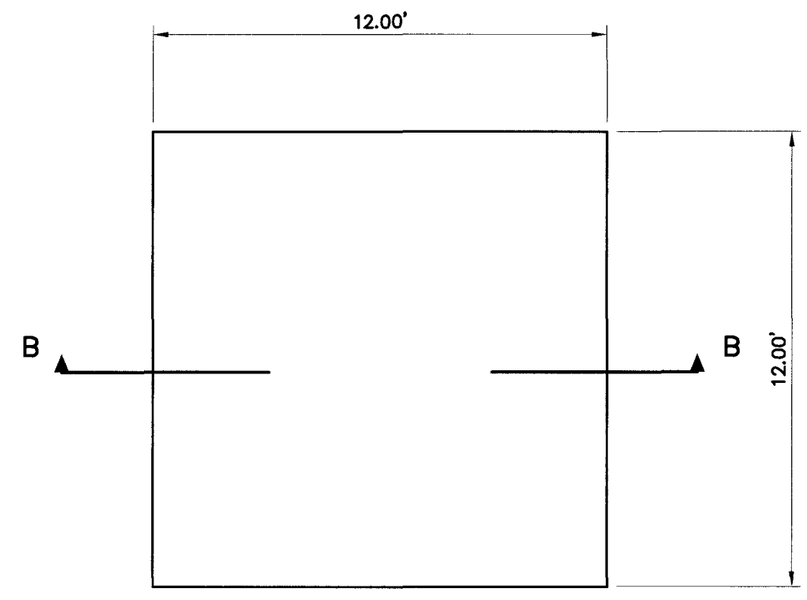


## PLAN

## HEAVY LIFT STATION FOUNDATION (THICKENED SLAB)

SEE SHEEP SP-01 FOR LOCATIONS

| NO. | DATE | REVISIONS | REMARKS |
|---|---|---|---|
| | | ORIGINAL SUBMISSION FOR AUTHORIZATION | |

SCALE: 1" = 80'
DWG NAME: DETAILS
SHT SET: ####
DWG CREATED: 05/01/2006
PEN TBL: ...
LAST UPDATE: 7/25/2006


Jones & DeMille Engineering
1535 South 100 West - Richfield, Utah 84701
Phone (435) 896-8266 Fax (435) 896-8268
www.jonesandcompanyllc.com


| | | | |
|---|---|---|---|
| DESIGN: | J.L.A. 05-06 | CHECK: | B.R.B. 05-06 |
| DRAWN: | J.L.A. 05-06 | CHECK: | B.R.B. 05-06 |
| QUANT: | J.L.A. 05-06 | CHECK: | B.R.B. 05-06 |

REVIEW
DATE:
BY:

APPROVAL RECOMM: DATE PROJECT DESIGN ENGINEER
APPROVED: DATE

ENERGY WEST
RILDA CANYON FACILITIES
PHASE I - DETAIL SHEET
PROJECT NUMBER: 0603-008

EMERY
COUNTY

SHEET NO. DT-09

# DETAIL SHEET

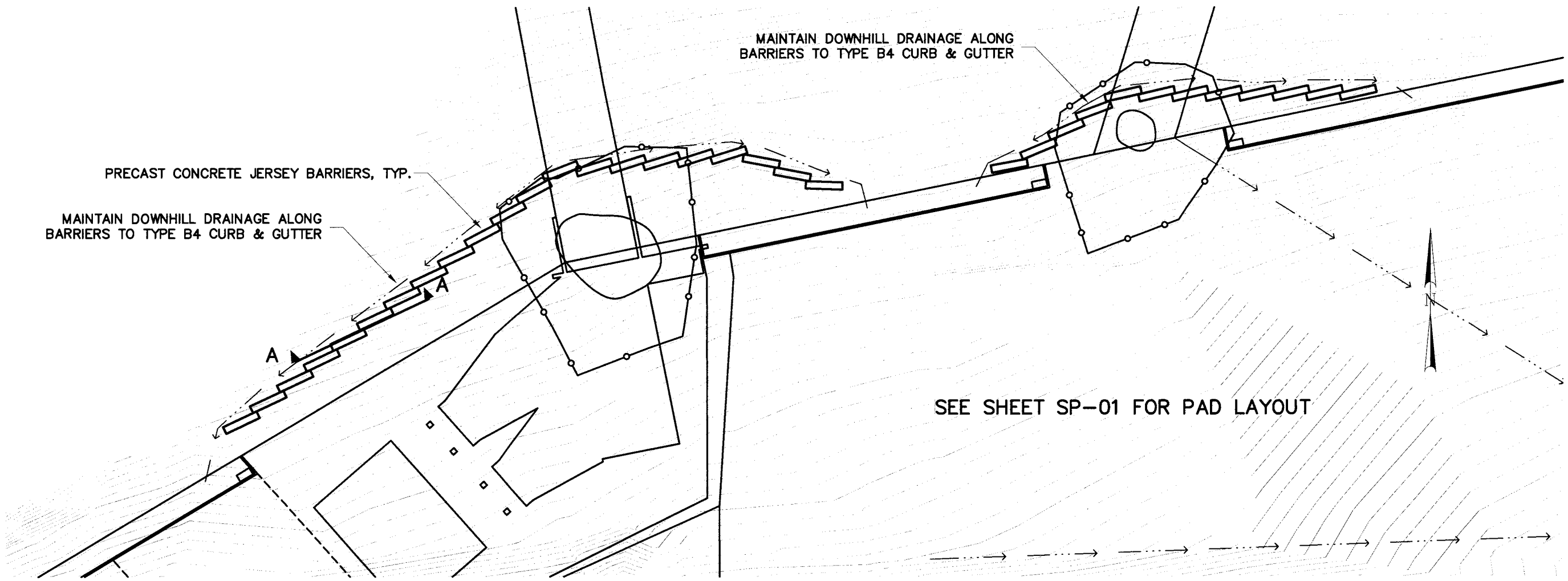


PLAN VIEW

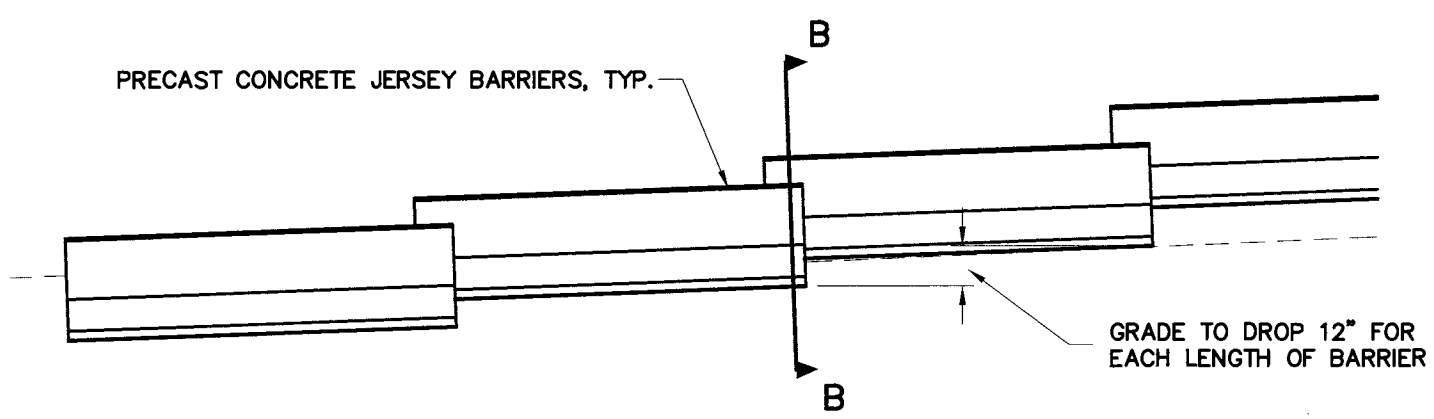


SECTION A–A

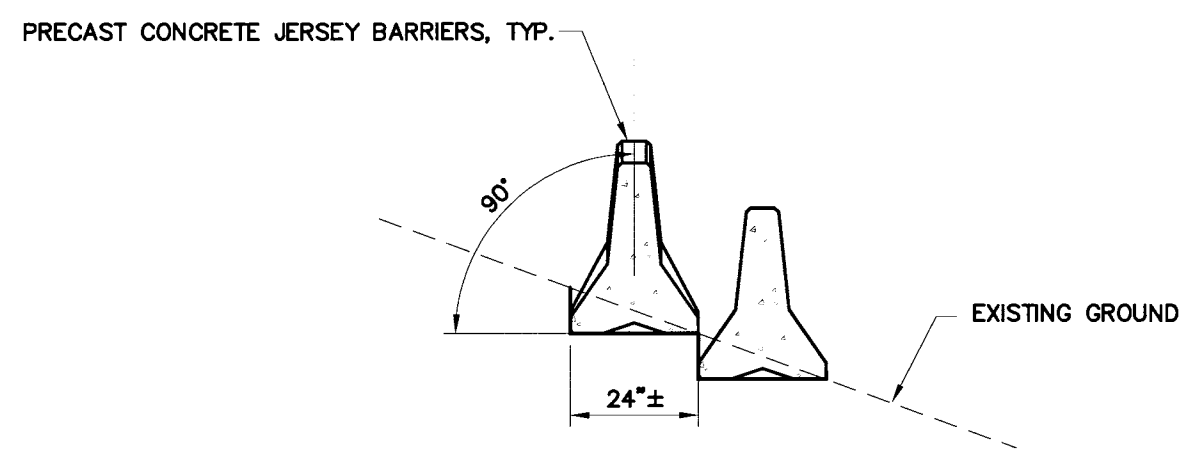


SECTION B–B

## DRAINAGE DIVERSION WALLS

| NO. | DATE | DESIGN ISSUE | PARCELS AFFECTED | REQUEST BY | REMARKS |
|---|---|---|---|---|---|
| | | ORIGINAL SUBMISSION FOR AUTHORIZATION | | | |

REVISIONS

SCALE: 1" = 80'

DWG NAME: DRAINWALL

SHT SET: ####

DWG CREATED: 05/01/2006

PEN TBL: 18inch-hp2600.ctb

LAST UPDATE: 7/25/2006


Jones & DeMille Engineering
1535 South 100 West - Richfield, Utah 84701
Phone (435) 896-8266 Fax (435) 896-8268
www.jonesandademille.com


| | | | |
|---|---|---|---|
| DESIGN: J.L.A. 05-06 | CHECK: B.R.B. 05-06 | REVIEW | |
| DRAWN: J.L.A. 05-06 | CHECK: B.R.B. 05-06 | DATE: | |
| QUANT: J.L.A. 05-06 | CHECK: B.R.B. 05-06 | BY: | |

APPROVAL RECOMM: _____ DATE _____ PROJECT DESIGN ENGINEER

APPROVED: _____ DATE

ENERGY WEST

RILDA CANYON FACILITIES

PHASE I - DETAIL SHEET

PROJECT NUMBER: 0603-008

EMERY COUNTY

SHEET NO. DT-10

# DETAIL SHEET

## FAN PORTAL

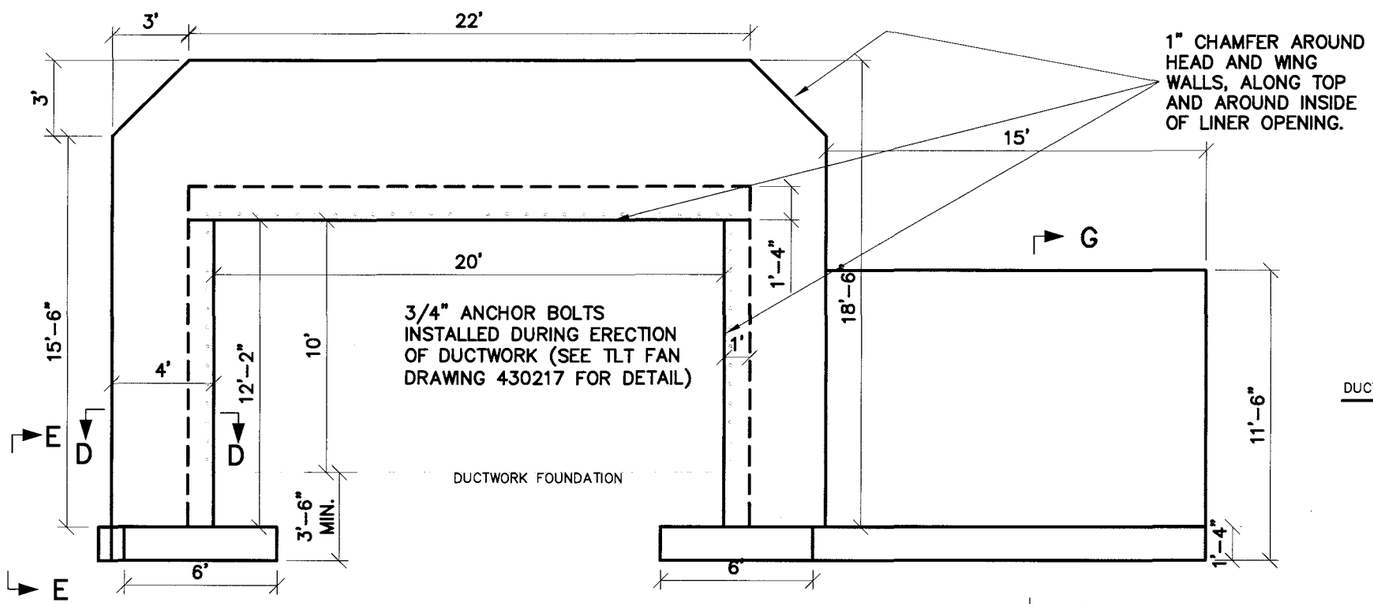


## FRONT VIEW OF HEADWALL

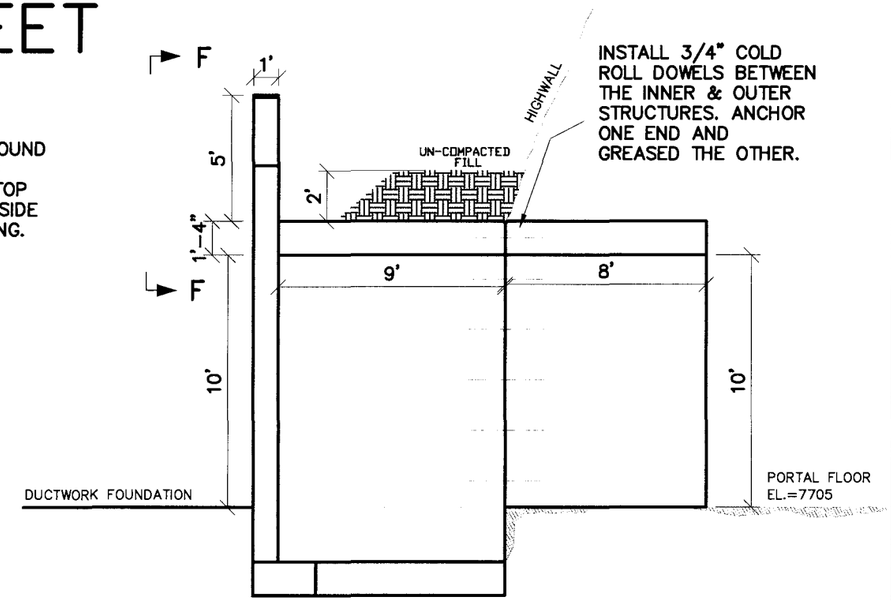


## CENTER LINE SECTION

(THROUGH LINER)

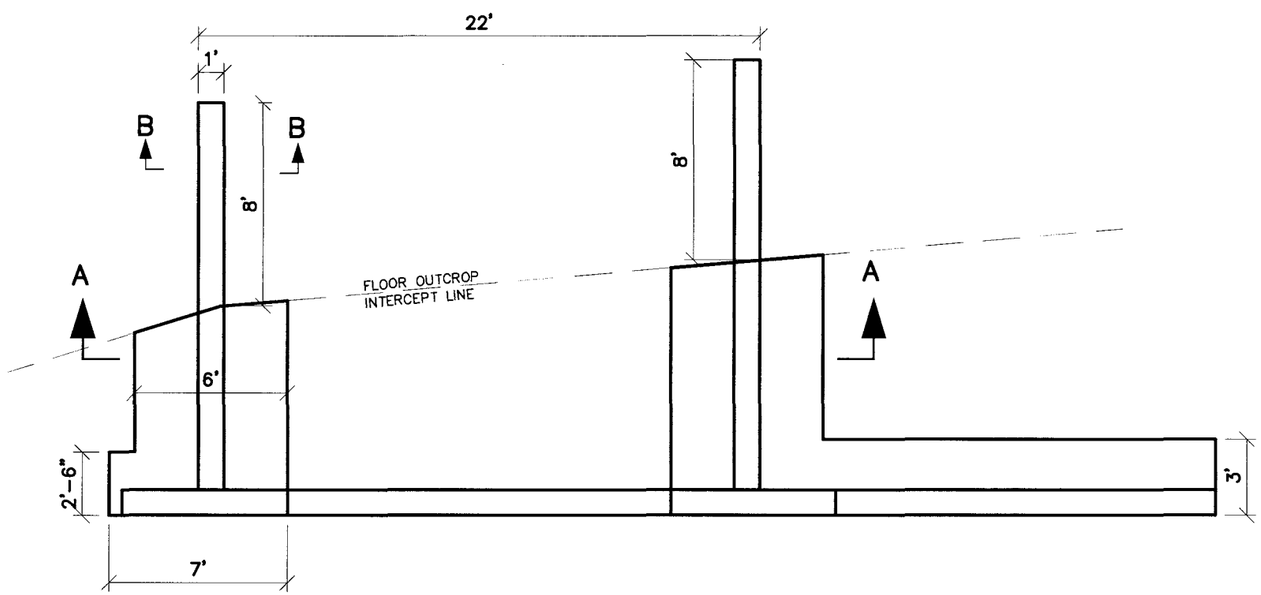


## PLAN VIEW OF FOOTINGS AND WALLS

(THROUGH TOP SLAB)

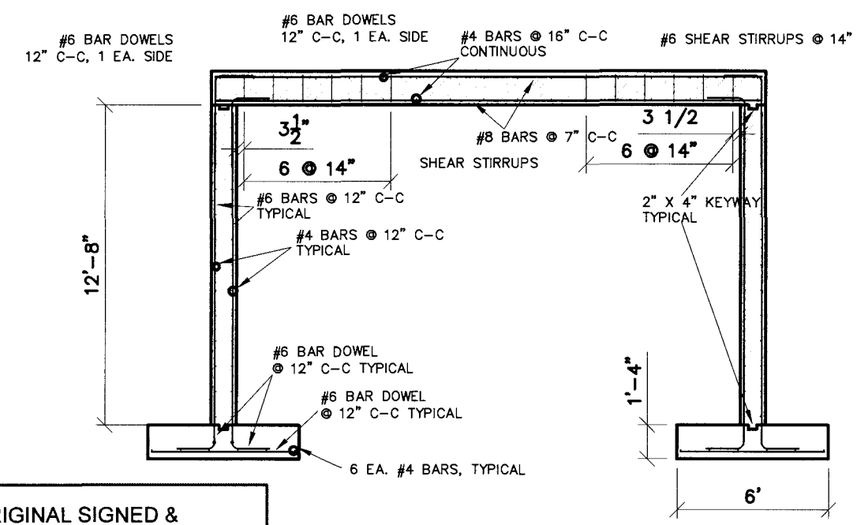


## SECTION A-A

ORIGINAL SIGNED & STAMPED BY:
JOHN CHRISTENSEN, P.E.
(EWMC)

ENGINEER'S SEAL

| NO. | DATE | REMARKS |
|---|---|---|
| | DESIGN MARK | PARCELS REQUEST |
| | REVISIONS BY CORR. | REVISIONS |
| | ORIGINAL SUBMISSION FOR AUTHORIZATION | |

SCALE: 1" = 80'

DWG NAME: PORTALCOLLAR DWG CREATED: 05/01/2006 LAST UPDATE: 7/25/2006

SHT SET: #### PEN TBL: 18mdrd-hp2600.ctb


Jones & DeMille Engineering
1535 South 100 West - Richfield, Utah 84701
Phone (435) 896-8266 Fax (435) 896-8268
www.jonesanddemille.com


| | | | |
|---|---|---|---|
| DESIGN: J.L.A. 05-06 | CHECK: B.R.B. 05-06 | REVIEW | |
| DRAWN: J.L.A. 05-06 | CHECK: B.R.B. 05-06 | DATE: | |
| QUANT: J.L.A. 05-06 | CHECK: B.R.B. 05-06 | BY: | |

APPROVAL RECOMM: DATE PROJECT DESIGN ENGINEER

APPROVED: DATE

ENERGY WEST

RILDA CANYON FACILITIES

PHASE I - PORTAL COLLAR SHEET

PROJECT NUMBER: 0603-008

EMERY COUNTY

SHEET NO. PC-01

# DETAIL SHEET
## ROAD PORTAL

"DEER CREEK MINE" TO BE STAMPED INTO ROAD PORTAL COLLAR.
OWNER WILL SUPPLY STAMP DETAIL.

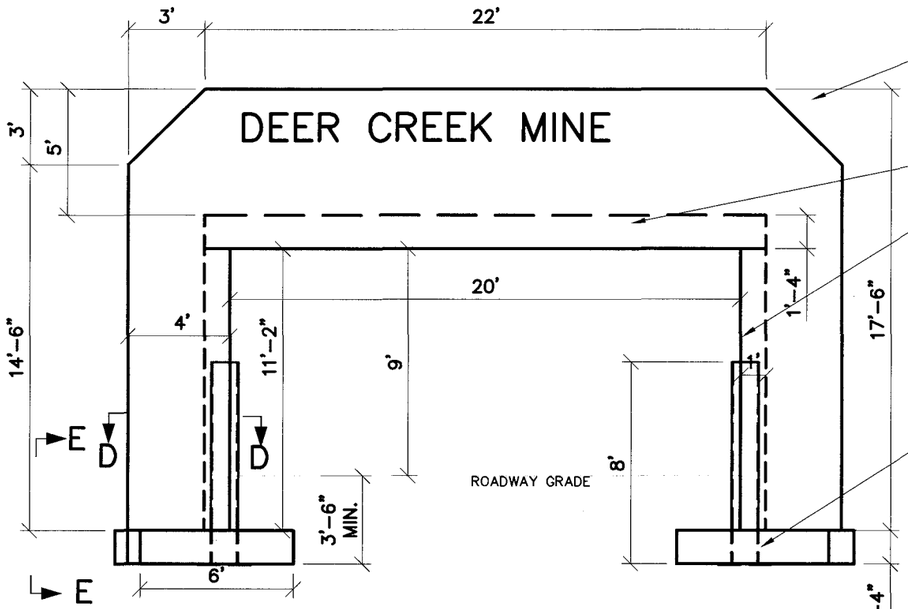


1" CHAMFER AROUND HEAD AND WING WALLS, ALONG TOP AND AROUND INSIDE OF LINER OPENING.

12" SCHD. 80 STEEL PIPE WITH $\frac{1}{2}$" STEEL 2' BY 2' PLATE WELDED ON BOTTOM, FILL WITH CONCRETE. SHOP COAT PRIMERED AND PAINTED TRAFFIC YELLOW.

## FRONT VIEW OF HEADWALL

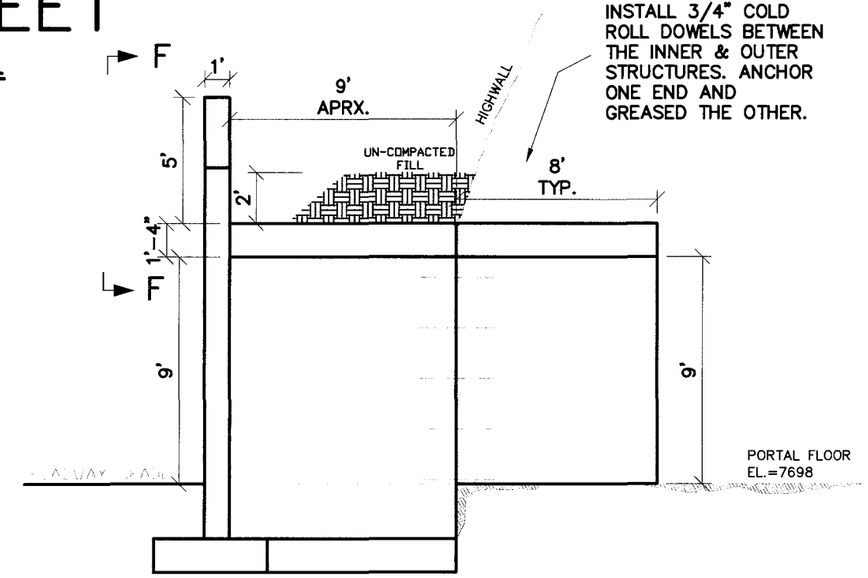


INSTALL 3/4" COLD ROLL DOWELS BETWEEN THE INNER & OUTER STRUCTURES. ANCHOR ONE END AND GREASED THE OTHER.

## CENTER LINE SECTION
(THROUGH LINER)

INSTALL 4 EA –3" PVC CONDUIT.
*** ONLY ON ROADWAY PORTAL ***

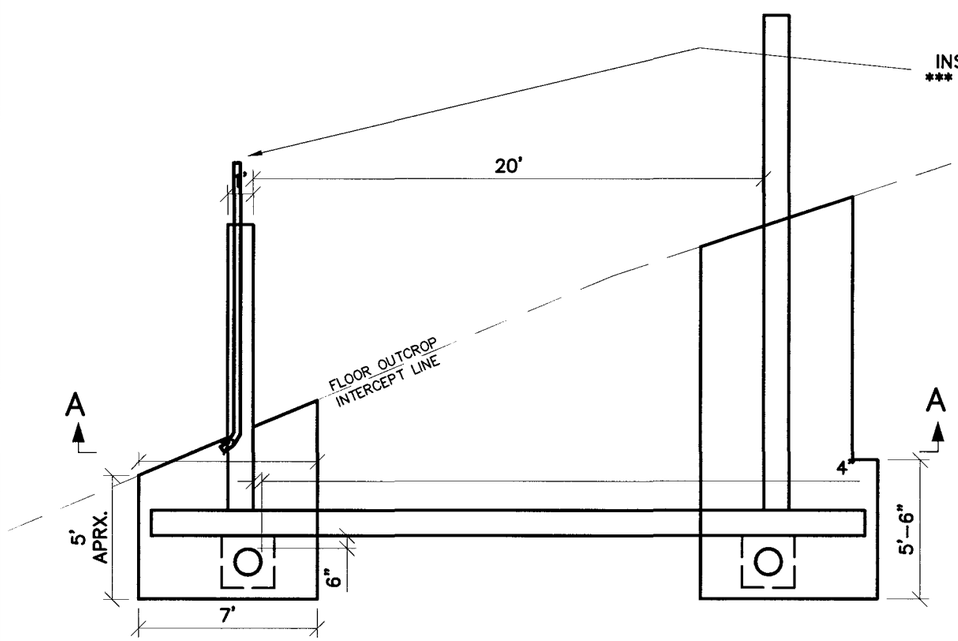


## PLAN VIEW OF FOOTINGS AND WALLS
(THROUGH TOP SLAB)

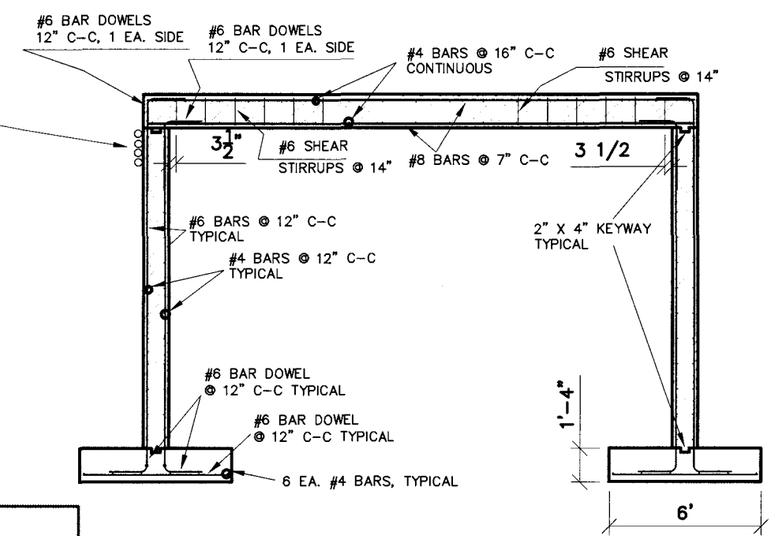


## SECTION A–A

ORIGINAL SIGNED & STAMPED BY:
JOHN CHRISTENSEN, P.E.
(EWMC)

ENGINEER'S SEAL

| NO. | DATE | REVISIONS | REMARKS |
|---|---|---|---|
| | | DESIGN CHANGE BY: MARS / CORS BY: PARCELS | PARCELS REQUEST |
| | | ORIGINAL SUBMISSION FOR AUTHORIZATION | |

SCALE: 1" = 80'
DWG NAME: PORTALCOLLAR
SHT SET: ####
DWG CREATED: 05/01/2006
PEN TBL: ysmdd-4-b2600.ctb
LAST UPDATE: 7/25/2006


Jones & DeMille Engineering
1535 South 100 West - Richfield, Utah 84701
Phone (435) 896-8266 Fax (435) 896-8268
www.jonesanddemille.com


| | | | |
|---|---|---|---|
| DESIGN: J.L.A. 05-06 | CHECK: B.R.B. 05-06 | REVIEW | |
| DRAWN: J.L.A. 05-06 | CHECK: B.R.B. 05-06 | DATE: . | |
| QUANT: J.L.A. 05-06 | CHECK: B.R.B. 05-06 | BY: . | |

APPROVAL RECOMM: DATE PROJECT DESIGN ENGINEER
APPROVED: DATE

ENERGY WEST
RILDA CANYON FACILITIES
PHASE I - PORTAL COLLAR SHEET
PROJECT NUMBER: 0603-008

EMERY
COUNTY

SHEET NO. PC-02

# DETAIL SHEET

## TYP. CONCRETE LINER – Reinforcement Details

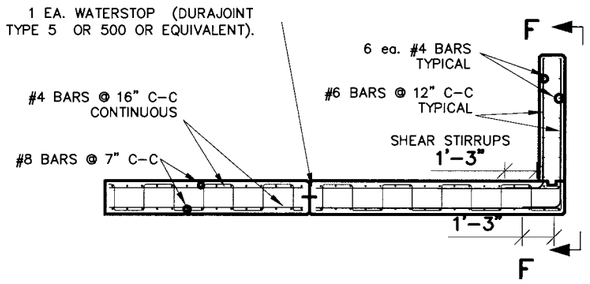


### CENTERLINE SECTION THROUGH CEILING SLAB AND HEADWALL

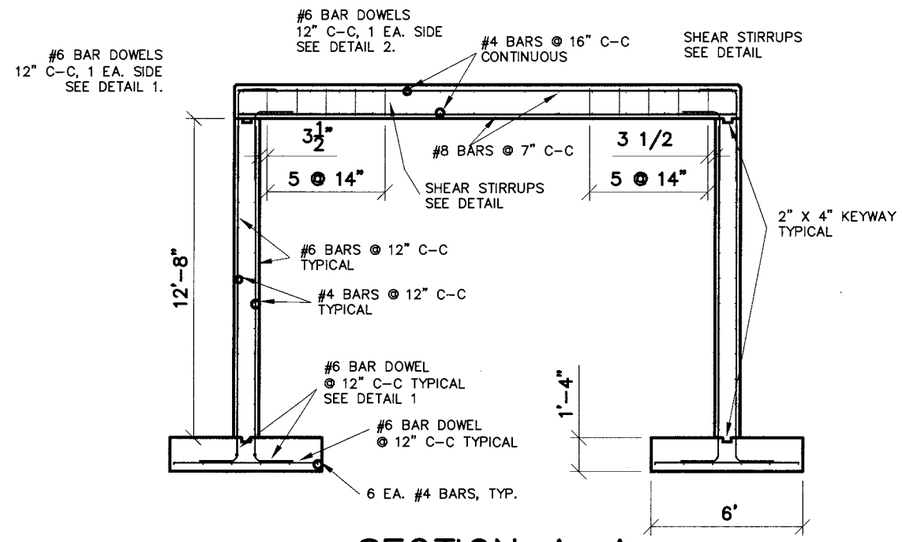


### SECTION A–A

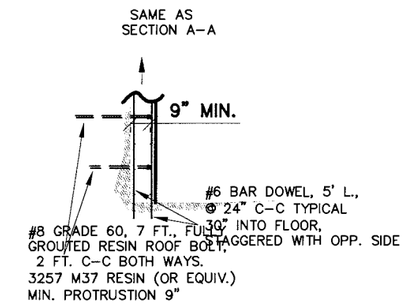


### SECTION B–B

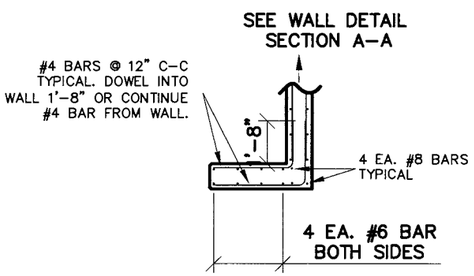


### SECTION D–D (WINGWALL)

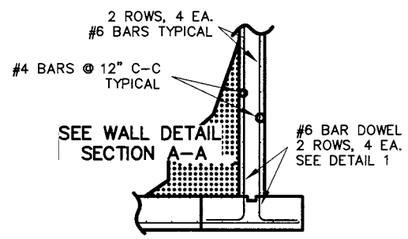


### SECTION E–E (WINGWALL)

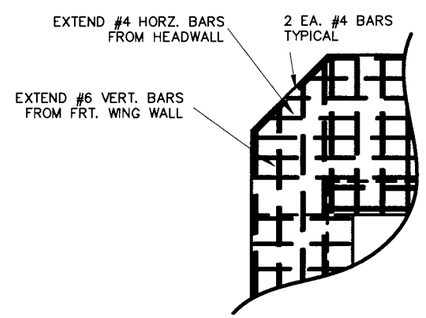


### VIEW F–F

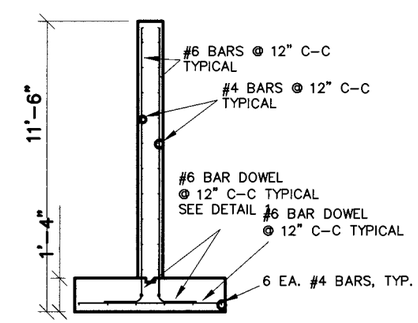


### SECTION G–G

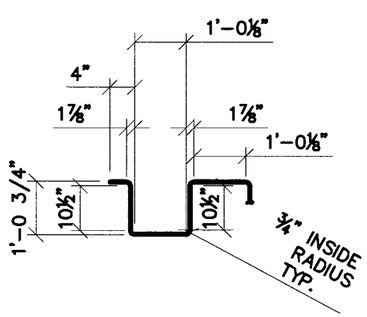


### STIRRUP BEND DETAIL

Not to Scale

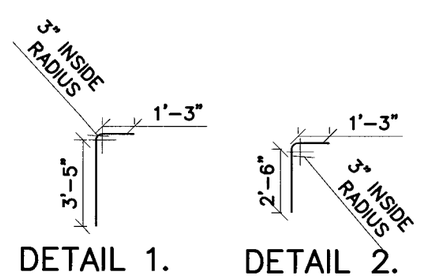


DETAIL 1. DETAIL 2.

### REBAR DOWL DETAILS

ORIGINAL SIGNED & STAMPED BY:
JOHN CHRISTENSEN, P.E.
(EWMC)

ENGINEER'S SEAL

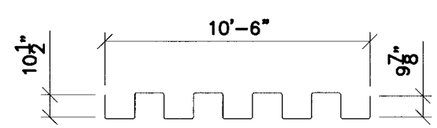


### MULTIPLE LOOP SHEAR STIRRUP

Fabricate from #3 Rebar, Grade 60, 20' Long

| NO. | DATE | REVISIONS | REMARKS |
|---|---|---|---|
| | | DESIGN REQUEST PARCELS BY | PARCELS REQUEST |
| | | ORIGINAL SUBMISSION FOR AUTHORIZATION | |

SCALE: 1" = 80'

DWG NAME: PORTALCOLLAR
SHT SET: ####
DWG CREATED: 05/01/2006
PEN TBL: 1stmrd4x2000.ctb
LAST UPDATE: 7/25/2006


Jones & DeMille Engineering
1535 South 100 West - Richfield, Utah 84701
Phone (435) 896-8266 Fax (435) 896-8268
www.jonesanddemille.com


| | | | |
|---|---|---|---|
| DESIGN: J.L.A. 05-06 | CHECK: B.R.B. 05-06 | REVIEW | |
| DRAWN: J.L.A. 05-06 | CHECK: B.R.B. 05-06 | DATE: . | |
| QUANT: J.L.A. 05-06 | CHECK: B.R.B. 05-06 | BY: . | |

APPROVAL RECOMM: DATE PROJECT DESIGN ENGINEER
APPROVED: DATE

ENERGY WEST
RILDA CANYON FACILITIES
PHASE I - PORTAL COLLAR SHEET
PROJECT NUMBER: 0603-008

EMERY COUNTY

SHEET NO. PC-03

# DETAIL SHEET

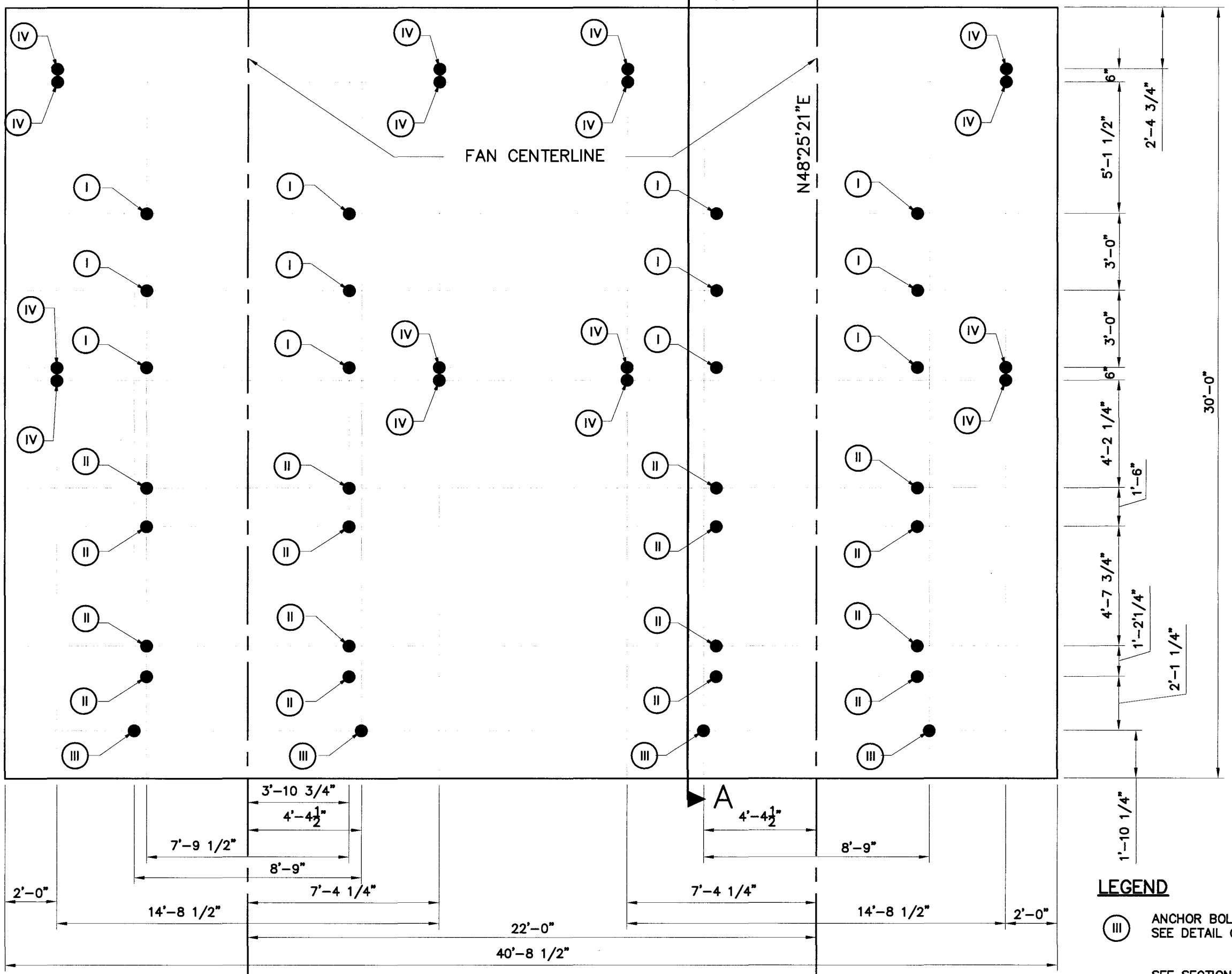


## PLAN FAN FOUNDATION & ANCHOR BOLT LAYOUT

ORIGINAL SIGNED &
STAMPED BY:
SCOTT ELLIS, P.E.
(ELLIS & ASSOC.)

ENGINEER'S SEAL

## LEGEND

(III) ANCHOR BOLT TYPE CALLOUT
SEE DETAIL ON SHEET FS-03

SEE SECTION A-A ON SHEET FS-02

| NO. | DATE | DESIGN REV. BY | MARK CORR. BY | PROJECT AFFECTED | REQUEST BY | REMARKS |
|---|---|---|---|---|---|---|
| | | ORIGINAL SUBMISSION FOR AUTHORIZATION | | | | |

REVISIONS

SCALE: 1" = 80'

DWG NAME: STRUCTURAL
SHT SET: ####

DWG CREATED: 05/01/2006
PEN TBL: ystrdcl-hp2600.ctb

LAST UPDATE: 7/25/2006


Jones & DeMille Engineering
1535 South 100 West Richfield, Utah 84701
Phone (435) 896-8266 Fax (435) 896-8268
www.jonesandmille.com


| | | | |
|---|---|---|---|
| DESIGN: J.L.A. 05-06 | CHECK: B.R.B. 05-06 | REVIEW | |
| DRAWN: J.L.A. 05-06 | CHECK: B.R.B. 05-06 | DATE: | . |
| QUANT: J.L.A. 05-06 | CHECK: B.R.B. 05-06 | BY: | . |

APPROVAL RECOMM: DATE PROJECT DESIGN ENGINEER
APPROVED: DATE

ENERGY WEST

RILDA CANYON FACILITIES

PHASE I - FAN STRUCTURE SHEET

PROJECT NUMBER: 0603-008

EMERY COUNTY

SHEET NO. FS-01

# DETAIL SHEET

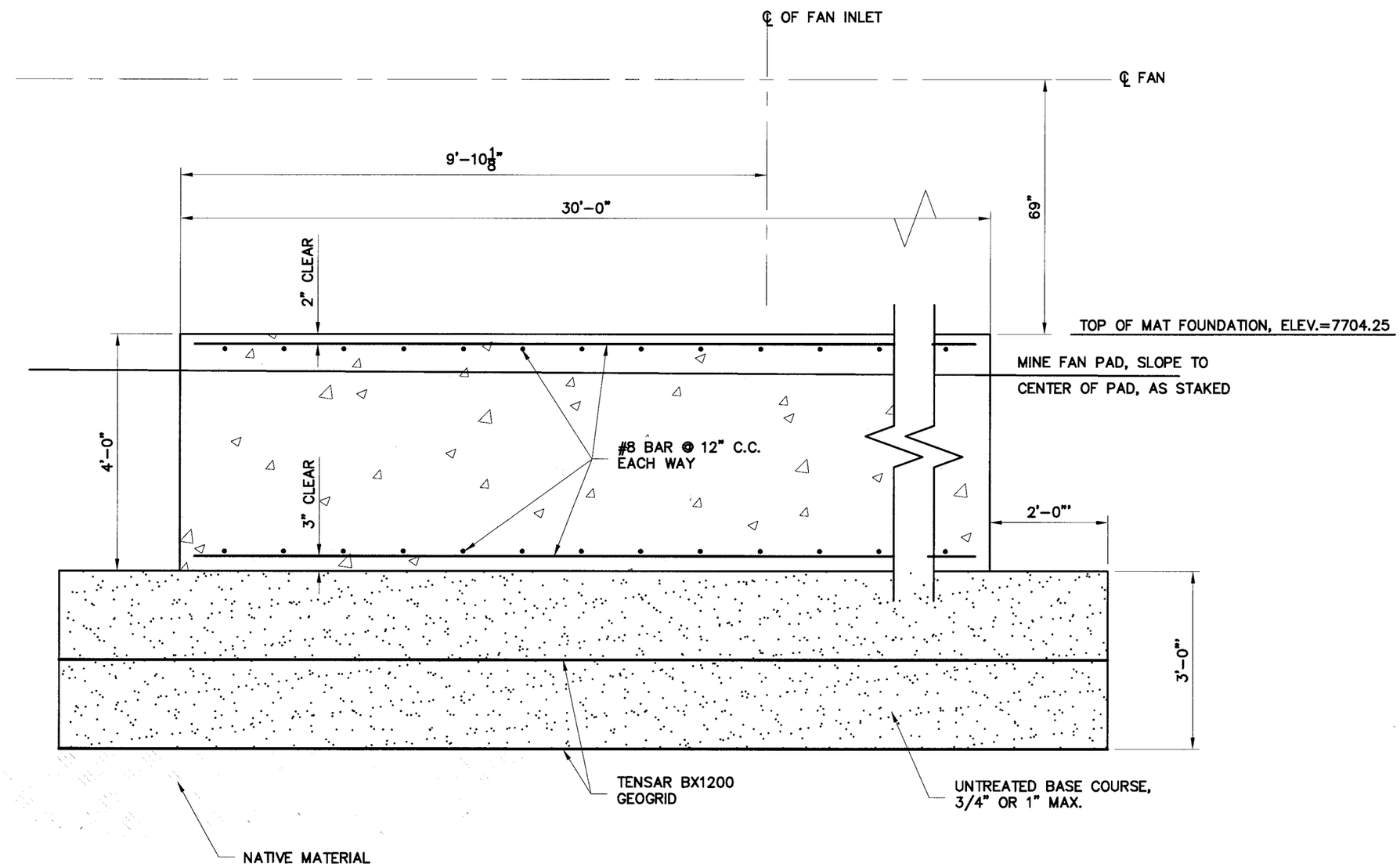


## SECTION A–A

## FAN FOUNDATION

NOTES:
1. SCARIFY AND RECOMPACT TOP 6" OF NATIVE MATERIAL, COMPACT TO 96% OF MAX. DENSITY
2. USE HDPE LINER EMBEDS AS REQ'D TO PROVIDE WATER TIGHT CONNECTION OF HDPE TO CONCRETE.

ORIGINAL SIGNED &
STAMPED BY:
SCOTT ELLIS, P.E.
(ELLIS & ASSOC.)

ENGINEER'S SEAL

| NO. | DATE | REVISIONS | REMARKS |
|---|---|---|---|
| | | ISSUED FOR DESIGN | WORK PROCEEDS REQUEST CORR. BY APPROVED BY | |
| | | ORIGINAL SUBMISSION FOR AUTHORIZATION | |

SCALE: 1" = 80'
DWG NAME: STRUCTURAL
SHT SET: ####
DWG CREATED: 05/01/2006
PEN TBL: ratzrch-hp2600.ctb
LAST UPDATE: 7/25/2006

Jones & DeMille Engineering
1535 South 100 West - Richfield, Utah 84701
Phone (435) 896-8266 Fax (435) 896-8268
www.jonesanddemille.com

DESIGN: J.L.A. 05-06 CHECK: B.R.B. 05-06 REVIEW
DRAWN: J.L.A. 05-06 CHECK: B.R.B. 05-06 DATE: -
QUANT: J.L.A. 05-06 CHECK: B.R.B. 05-06 BY: -

APPROVAL RECOMM: DATE PROJECT DESIGN ENGINEER
APPROVED: DATE

ENERGY WEST
RILDA CANYON FACILITIES
PHASE I - FAN STRUCTURE SHEET
PROJECT NUMBER: 0603-008

EMERY
COUNTY

SHEET NO. FS-02

# DETAIL SHEET

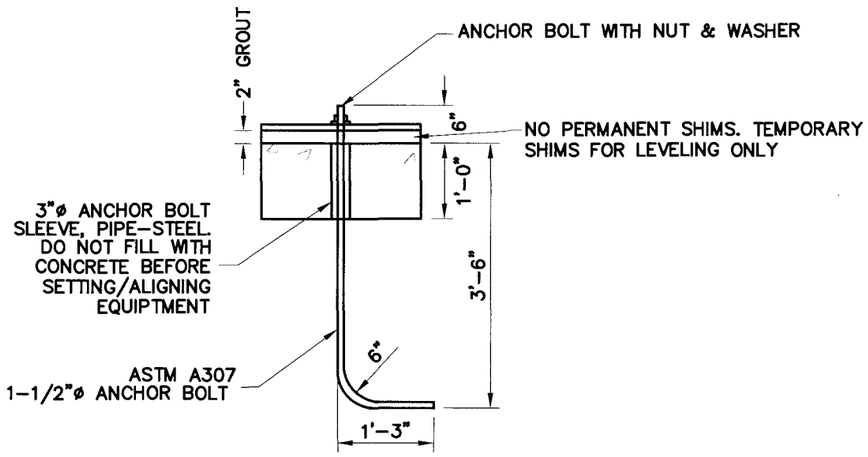


## ANCHOR BOLT AT POINT I & IV

(I) 12 TOTAL

(IV) 16 TOTAL

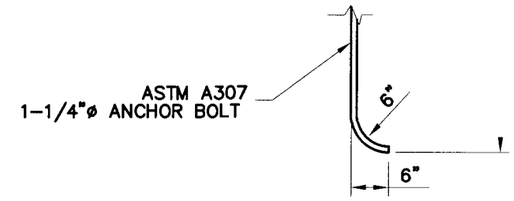


## MODIFIED TYPE III ANCHOR BOLT

(III) 4 TOTAL

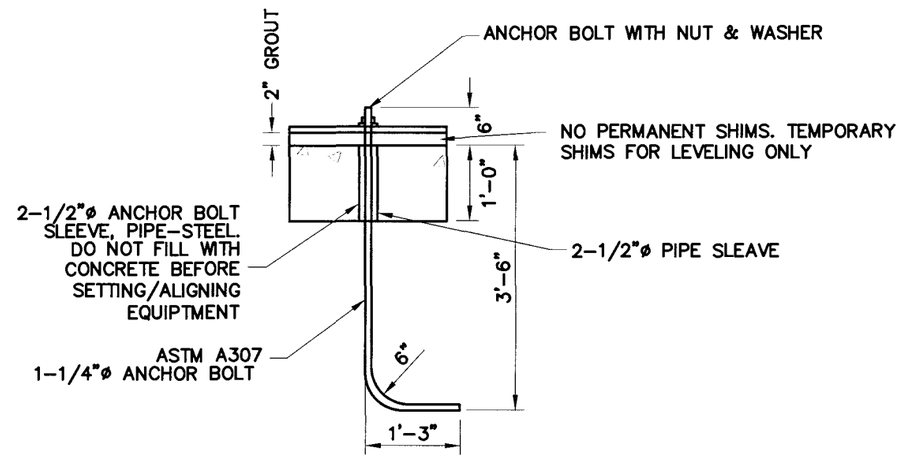


## ANCHOR BOLT AT POINT III

(III) 8 TOTAL

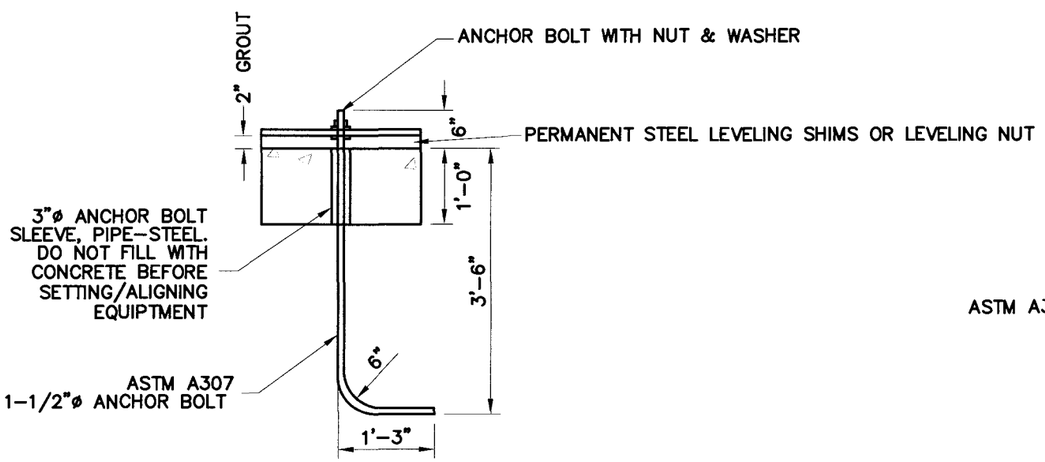


## ANCHOR BOLT AT POINT II

(II) 16 TOTAL

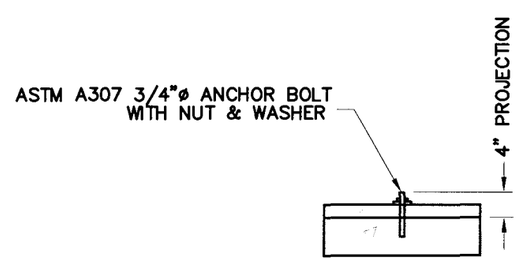


## TYPICAL DRILL IN PLACE ANCHOR BOLT SECTION AT POINT V

ORIGINAL SIGNED & STAMPED BY:
SCOTT ELLIS, P.E.
(ELLIS & ASSOC.)

ENGINEER'S SEAL

| NO. | DATE | DESIGN REV. BY | MASS CORR. BY | PARCELS AFFECTED | RECHECK BY | REMARKS |
|---|---|---|---|---|---|---|
| | | ORIGINAL SUBMISSION FOR AUTHORIZATION | | | | |

REVISIONS

SCALE: 1" = 80'

DWG NAME: STRUCTURAL
SHT SET: ####

DWG CREATED: 05/01/2006
PEN TBL: ,standard-v2000.ctb

LAST UPDATE: 7/25/2006


Jones & DeMille Engineering
1535 South 100 West - Richfield, Utah 84701
Phone (435) 896-8266 Fax (435) 896-8268
www.jonesandpdemille.com


| | | | |
|---|---|---|---|
| DESIGN: J.L.A. 05-06 | CHECK: B.R.B. 05-06 | REVIEW | |
| DRAWN: J.L.A. 05-06 | CHECK: B.R.B. 05-06 | DATE: | |
| QUANT: J.L.A. 05-06 | CHECK: B.R.B. 05-06 | BY: | |

APPROVAL RECOMM: DATE PROJECT DESIGN ENGINEER
APPROVED: DATE

ENERGY WEST
RILDA CANYON FACILITIES
PHASE I - FAN STRUCTURE SHEET
PROJECT NUMBER: 0603-008

EMERY COUNTY

SHEET NO. FS-03

# DETAIL SHEET

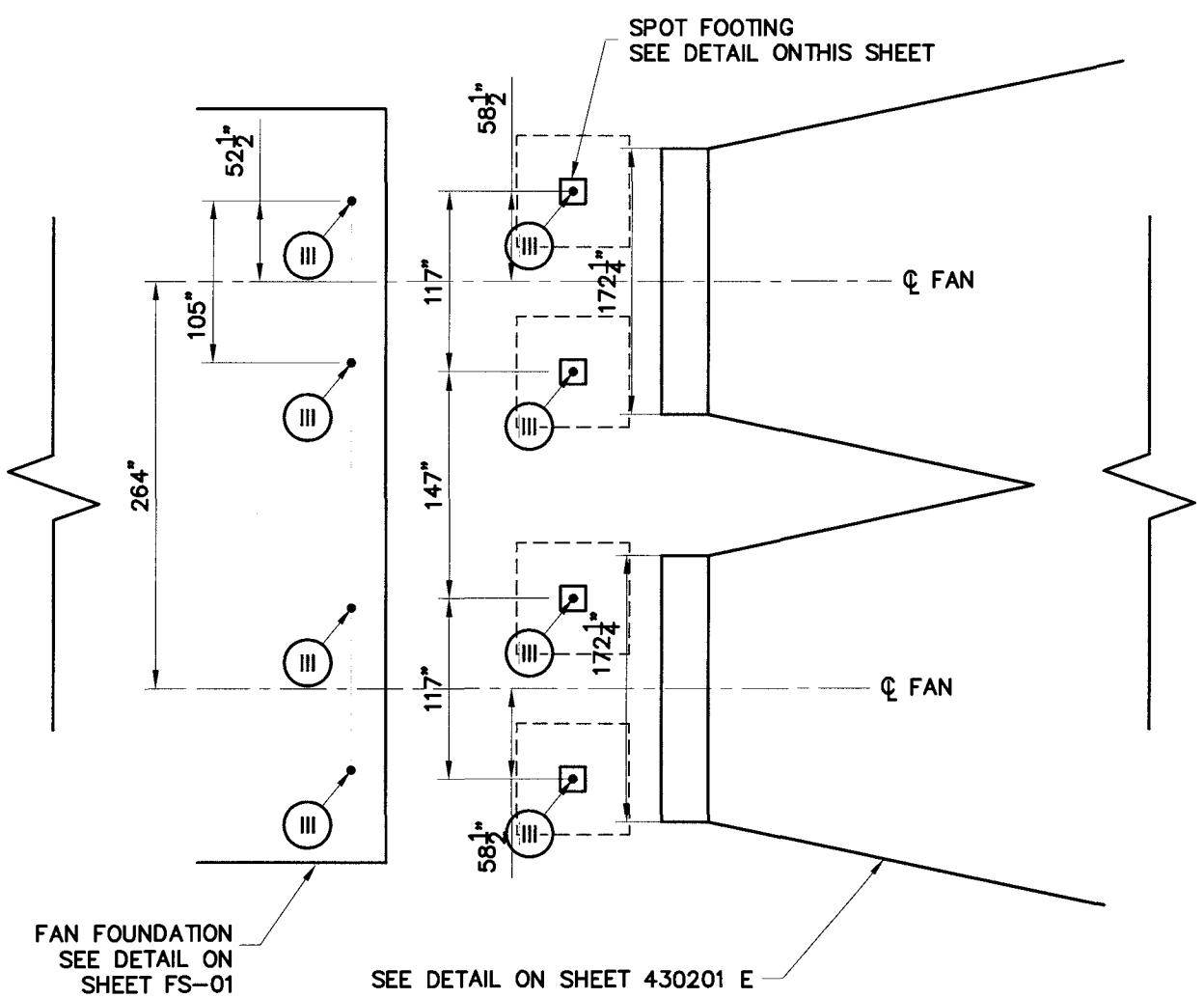


## PLAN VIEW

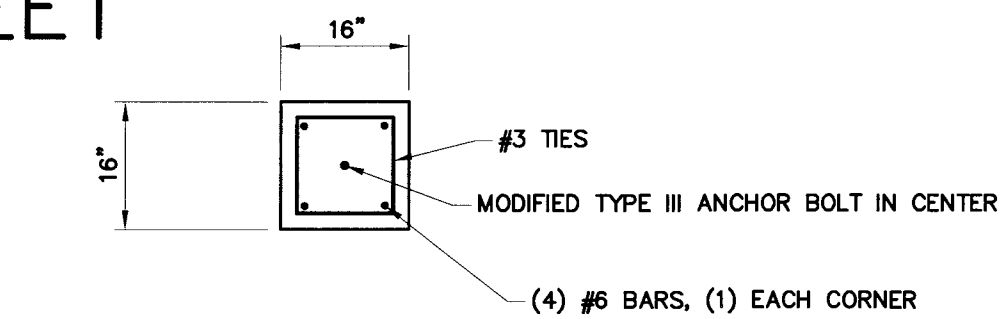


## SECTION B–B

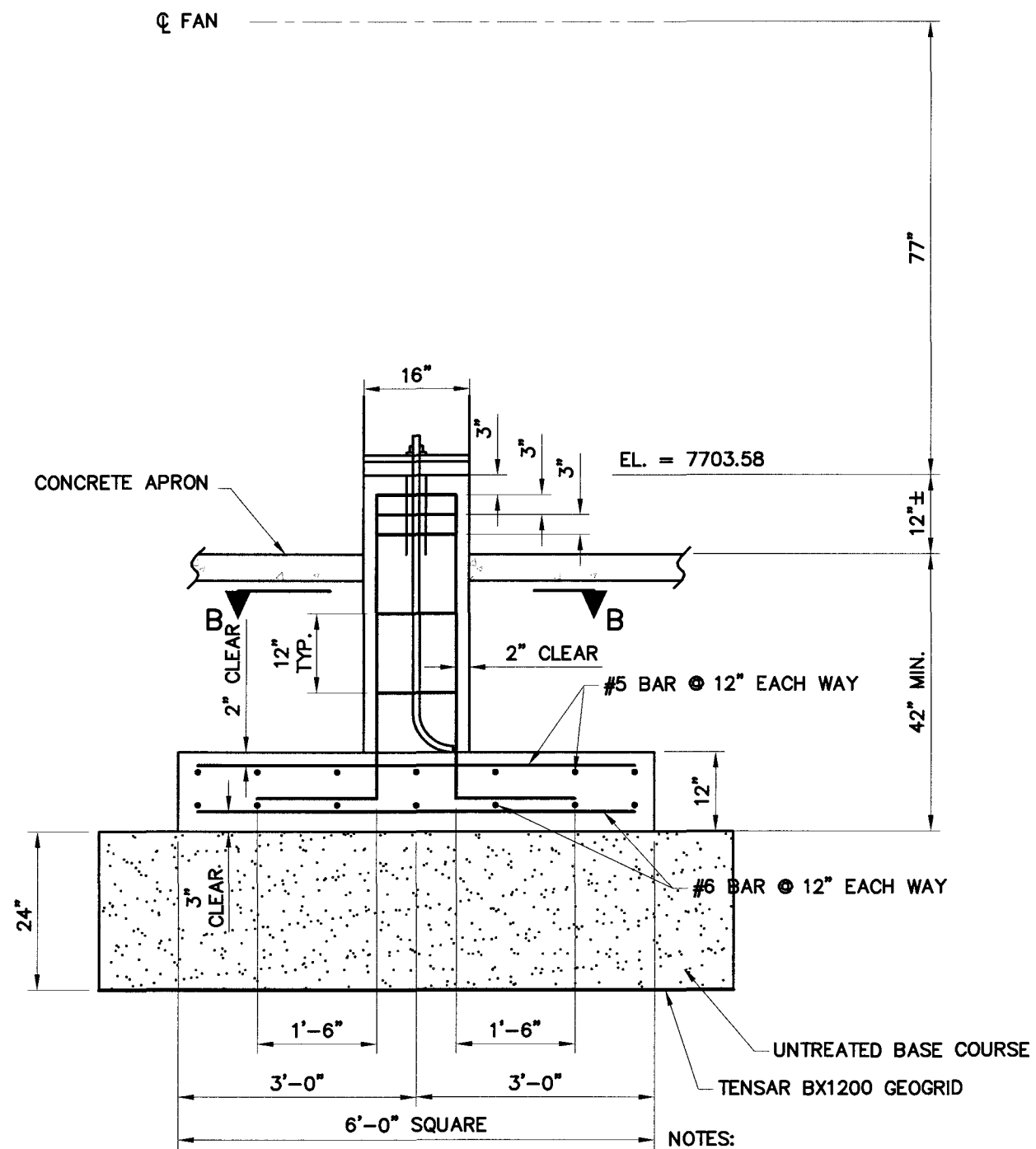


## ELEVATION
## SPOT FOOTING DETAIL

NOTES:
1. SCARIFY AND RECOMPACT TOP 6" OF NATIVE MATERIAL, COMPACT TO 96% OF MAX. DENSITY
2. USE HDPE LINER EMBEDS AS REQ'D TO PROVIDE WATER TIGHT CONNECTION OF HDPE TO CONCRETE.

ORIGINAL SIGNED &
STAMPED BY:
SCOTT ELLIS, P.E.
(ELLIS & ASSOC.)

ENGINEER'S SEAL

| NO. | DATE | DESIGN REVISION | MAPS, PARCELS CORR. INVESTIGATION | REQUEST BY: | REMARKS |
|---|---|---|---|---|---|
| | | ORIGINAL SUBMISSION FOR AUTHORIZATION | | | |

REVISIONS

SCALE: 1" = 10'

DWG NAME: STRUCTURAL
SHT SET: ####
DWG CREATED: 06/20/2006
PEN TBL: ratndd-hp2600.ctb
LAST UPDATE: 7/25/2006

Jones & DeMille Engineering
1535 South 100 West - Richfield, Utah 84701
Phone (435) 896-8266 Fax (435) 896-8268
www.jonesandodemille.com

DESIGN: J.L.A. 06-06
DRAWN: J.L.A. 06-06
QUANT: J.L.A. 06-06
CHECK: B.R.B. 06-06
CHECK: B.R.B. 06-06
CHECK: B.R.B. 06-06
REVIEW
DATE: .
BY: .

APPROVAL RECOMM: DATE PROJECT DESIGN ENGINEER
APPROVED: DATE

ENERGY WEST
RILDA CANYON FACILITIES
PHASE I - FAN STRUCTURE SHEET
PROJECT NUMBER: 0603-008

EMERY
COUNTY

SHEET NO. FS-04

# DETAIL SHEET

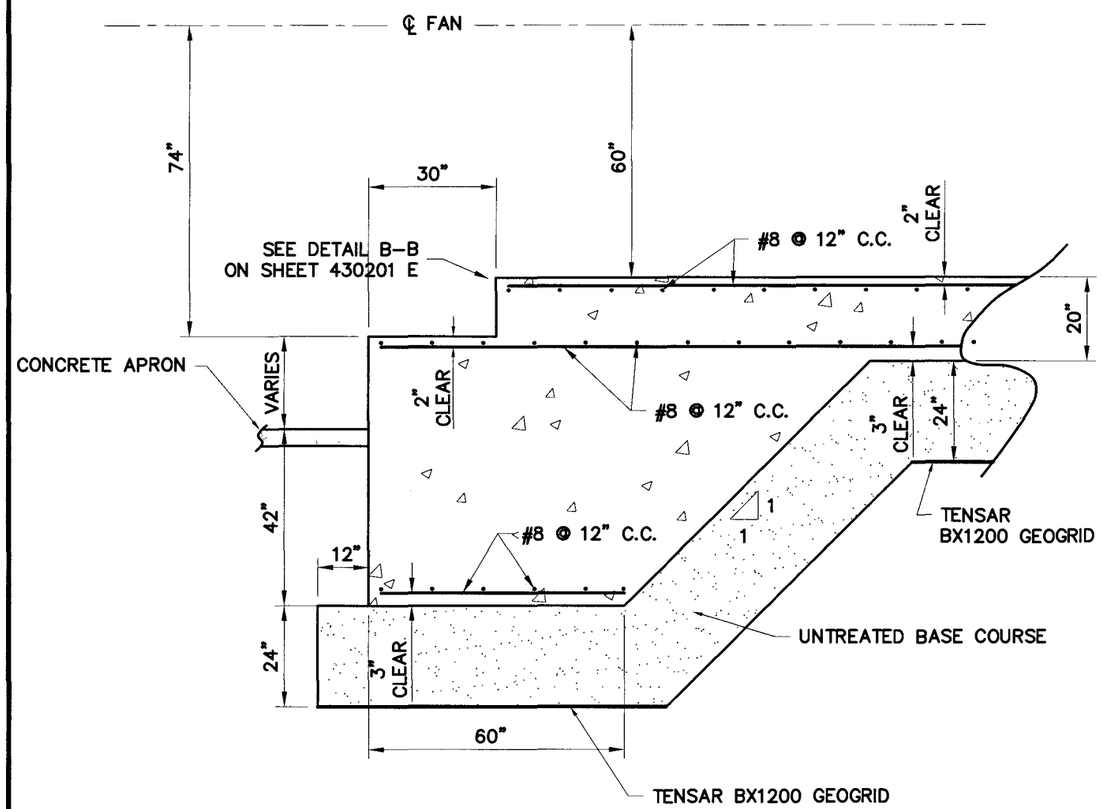


## SECTION B–B

SEE TLT BABCOCK SHEET 430201 E FOR SECTION LOCATIONS

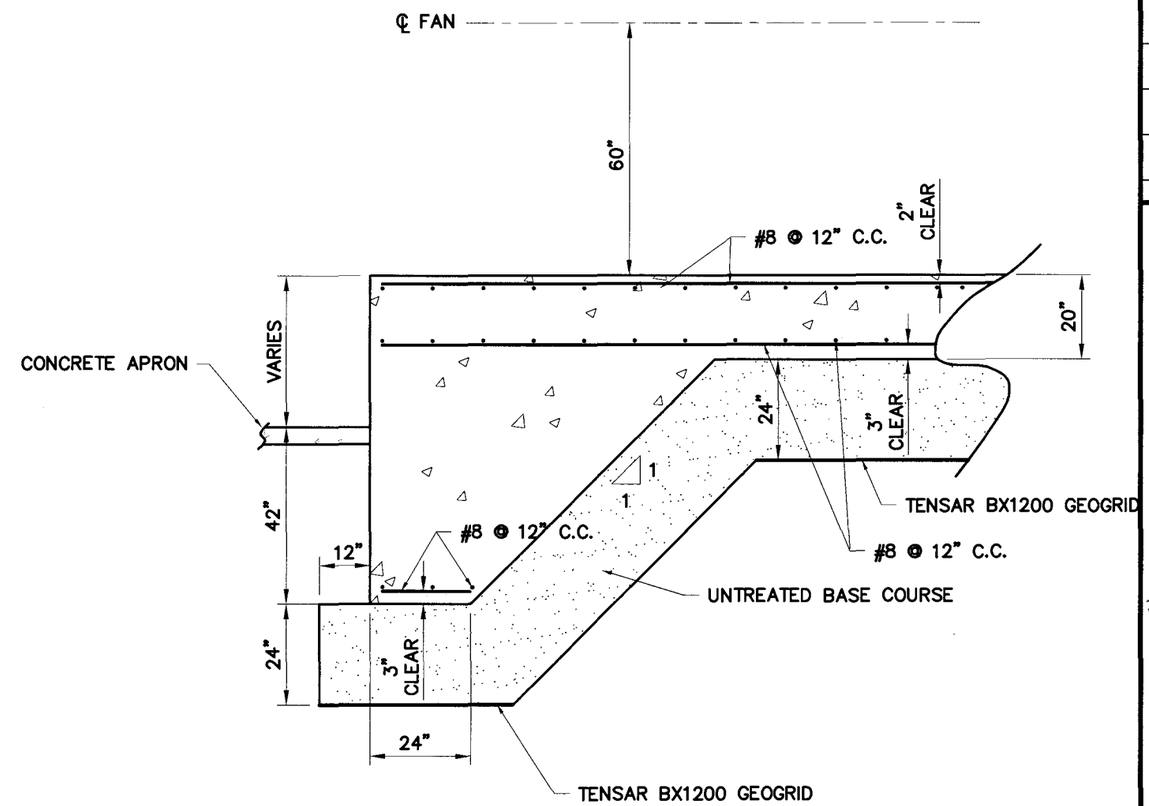


## SECTION D–D

SEE TLT BABCOCK SHEET 430201 E FOR SECTION LOCATIONS

NOTES:
1. SCARIFY AND RECOMPACT TOP 6" OF NATIVE MATERIAL, COMPACT TO 96% OF MAX. DENSITY
2. USE HDPE LINER EMBEDS AS REQ'D TO PROVIDE WATER TIGHT CONNECTION OF HDPE TO CONCRETE.

ORIGINAL SIGNED &
STAMPED BY:
SCOTT ELLIS, P.E.
(ELLIS & ASSOC.)

ENGINEER'S SEAL

| NO. | DATE | DESIGN MAJOR REV. BY CORR. BY | PARCEL AFFECTED | REQUEST BY | REMARKS |
|---|---|---|---|---|---|
| | | | | | ORIGINAL SUBMISSION FOR AUTHORIZATION |

REVISIONS

SCALE: 1" = 10'

DWG NAME: STRUCTURAL
SHT SET: ####

DWG CREATED: 06/20/2006
PEN TBL: 15in2in2-0.26Wn.tb

LAST UPDATE: 7/25/2006


Jones & DeMille Engineering
1535 South 100 West Richfield, Utah 84701
Phone (435) 896-8266 Fax (435) 896-8268
www.jonesandassociate.com


| | | | |
|---|---|---|---|
| DESIGN: J.L.A. 06-06 | CHECK: B.R.B. 06-06 | REVIEW | |
| DRAWN: J.L.A. 06-06 | CHECK: B.R.B. 06-06 | DATE: | |
| QUANT: J.L.A. 06-06 | CHECK: B.R.B. 06-06 | BY: | |

APPROVAL RECOMM: DATE: PROJECT DESIGN ENGINEER
APPROVED: DATE

ENERGY WEST
RILDA CANYON FACILITIES
PHASE I - FAN STRUCTURE SHEET
PROJECT NUMBER: 0603-008

EMERY
COUNTY

SHEET NO. FS-05

# DETAIL SHEET

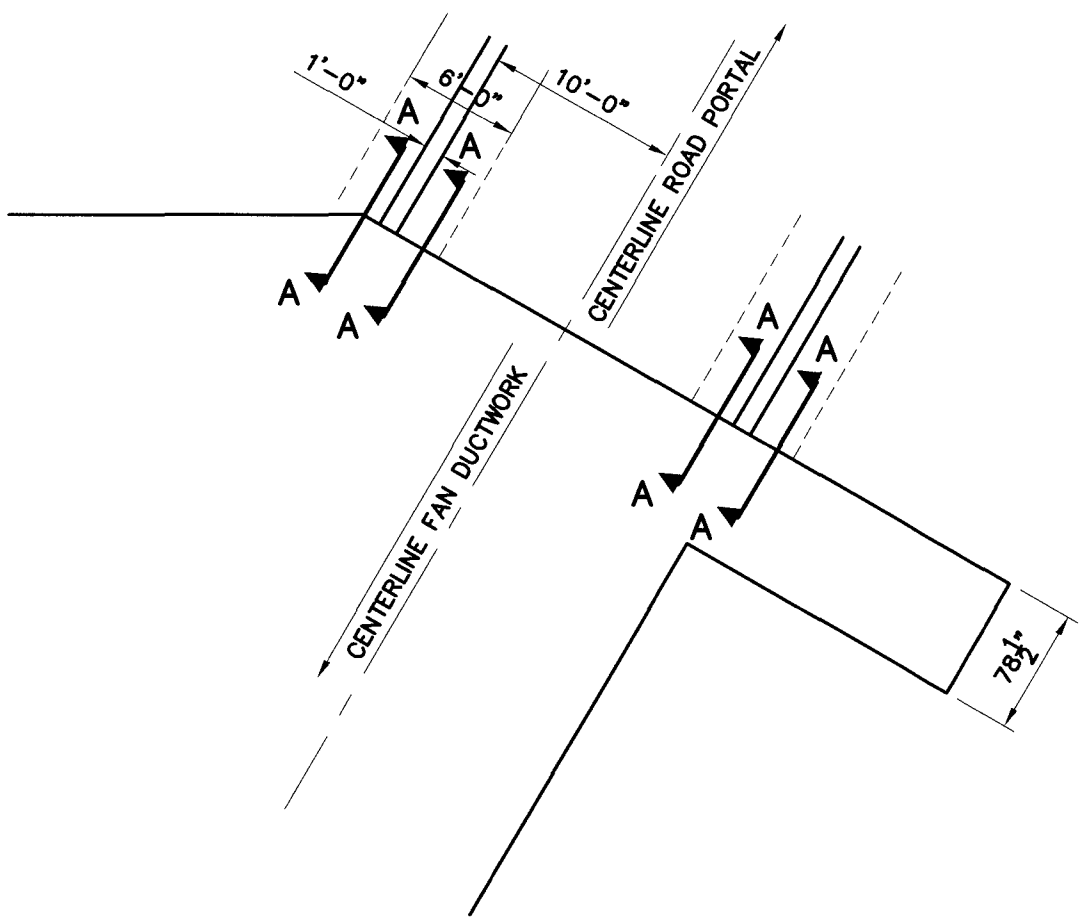


PLAN VIEW

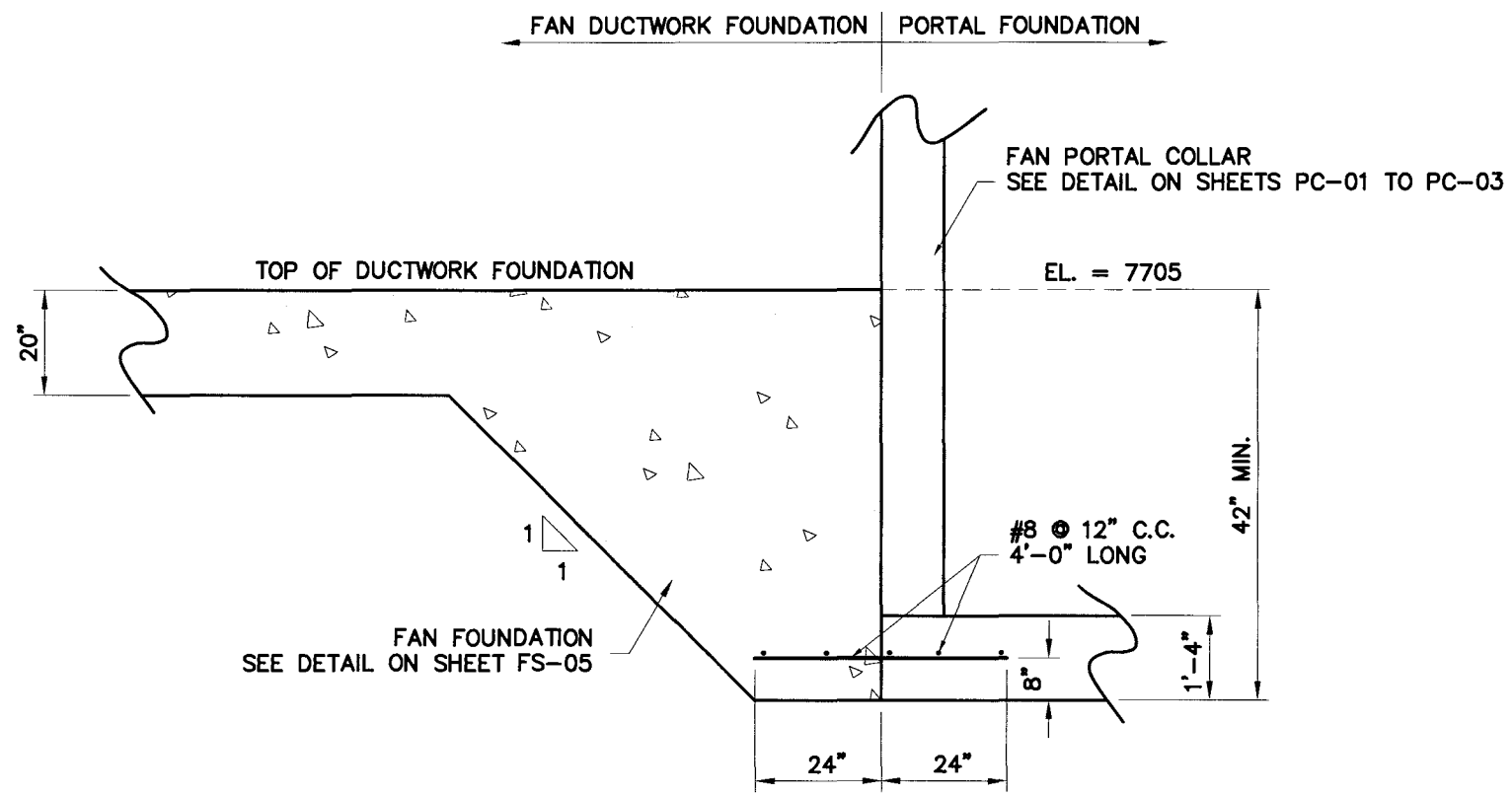


SECTION A-A

ORIGINAL SIGNED &
STAMPED BY:
SCOTT ELLIS, P.E.
(ELLIS & ASSOC.)

ENGINEER'S SEAL

## FAN/PORTAL FOUNDATION CONNECTION DETAIL

| NO. | DATE | DESIGN REVISION | MAPS BY CORP. | PARCELS REQUEST BY PARCELS | REMARKS |
|---|---|---|---|---|---|
| | | | | | ORIGINAL SUBMISSION FOR AUTHORIZATION |

REVISIONS

SCALE: 1" = 10'

DWG NAME: STRUCTURAL
SHT SET: ####

DWG CREATED: 06/20/2006
PEN TBL: _1shc20-4v2000.ctb

LAST UPDATE: 7/25/2006


Jones & DeMille Engineering
1535 South 100 West - Richfield, Utah 84701
Phone (435) 896-8266 Fax (435) 896-9268
www.jonesanddemille.com


| | | | |
|---|---|---|---|
| DESIGN: J.L.A. 06-06 | CHECK: B.R.B. 06-06 | REVIEW | |
| DRAWN: J.L.A. 06-06 | CHECK: B.R.B. 06-06 | DATE: | |
| QUANT: J.L.A. 06-06 | CHECK: B.R.B. 06-06 | BY: | |

APPROVAL RECOMM: DATE PROJECT DESIGN ENGINEER
APPROVED: DATE

ENERGY WEST
RILDA CANYON FACILITIES
PHASE I - FAN STRUCTURE SHEET
PROJECT NUMBER: 0603-008

EMERY COUNTY

SHEET NO. FS-06

DWG. NO. 430201 E

| REVISIONS | | | | |
|---|---|---|---|---|
| REVISION | DESCRIPTION | | DATE | APPROVAL |
| 1 | WAS 180-1/2, WAS 90-1/4 (D1&F1) | HJG | 5/24/06 | HG |

## JONES & DEMILLE REVISIONS

2 SECTIONS B-B, D-D

1. SECTION CALLOUTS AROUND FAN FOUNDATION IMPOSED BY JONES & DEMILLE ENGINEERING.
2. SEE SHEET FS-05 FOR FOUNDATION SECTIONS.

3 ADDED HDPE LINER ATTACHMENT LINE

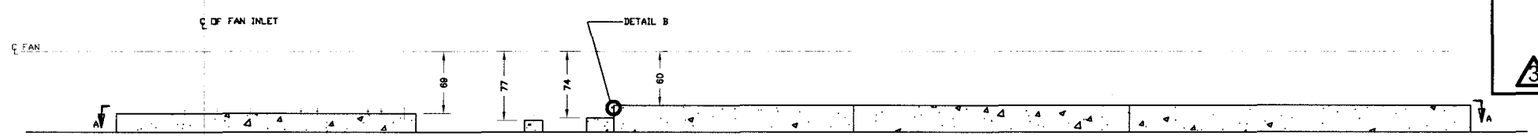


FOUNDATION ELEVATION

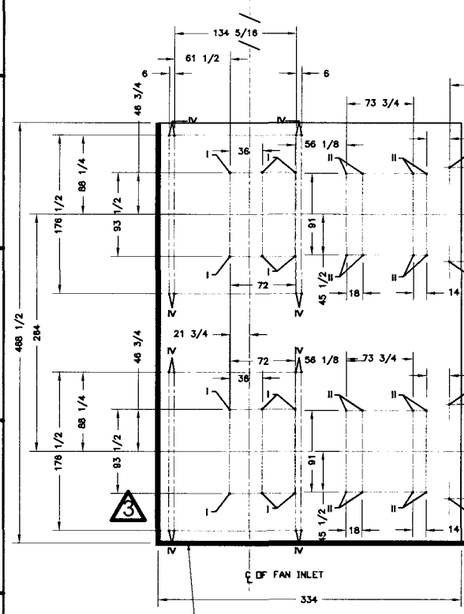


SECTION A–A

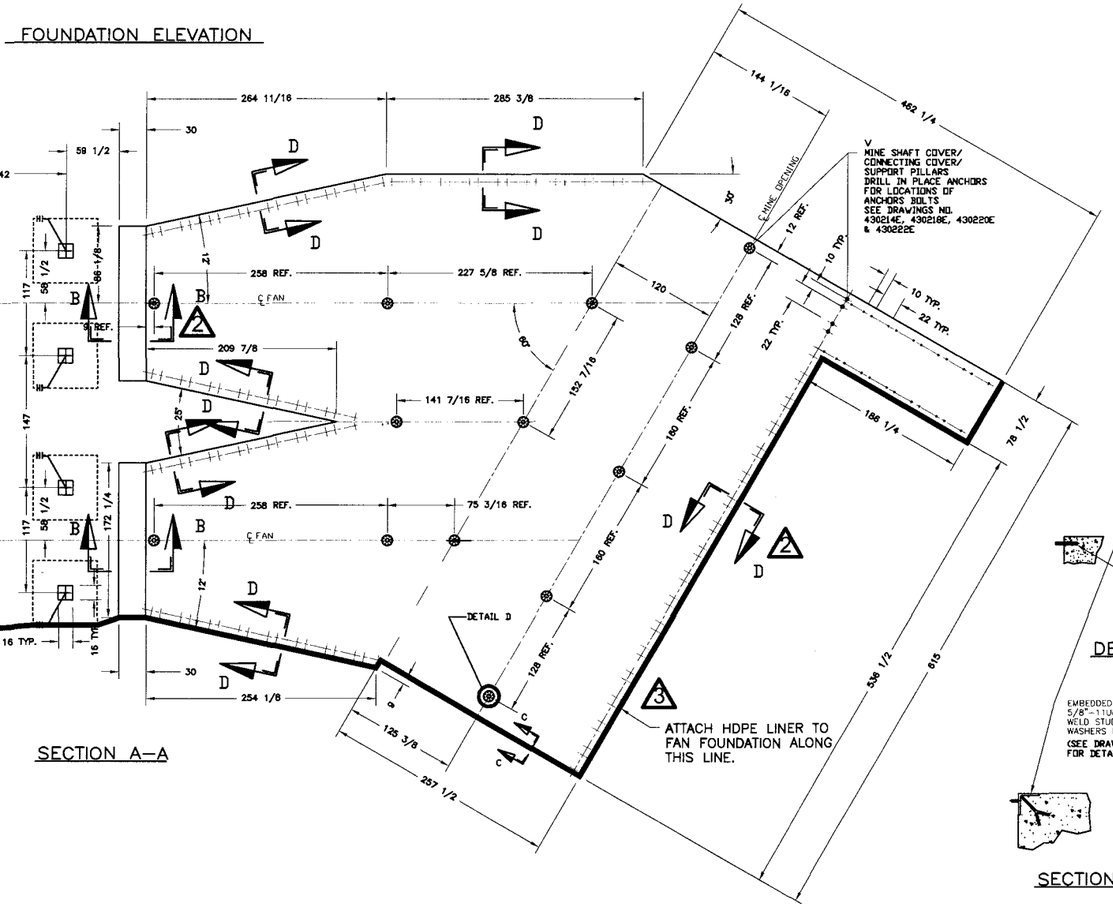


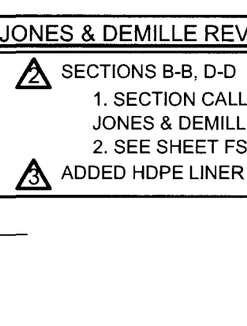


DETAIL B–B

SECTION C–C

## NOTES: FOUNDATION

THE FOLLOWING PARAMETERS ARE SUPPLIED TO ASSIST THE FOUNDATION DESIGNER:

THE NATURAL FREQUENCIES OF THE FAN/FOUNDATION SYSTEM TO BE DETERMINED ACCORDING TO THE LATEST STATE OF THE ART MUST NOT FALL WITHIN THE FOLLOWING RANGES:

0.8 Fn UP TO 1.2 Fn
1.8 Fn UP TO 2.2 Fn
Fn = FAN OPERATING SPEED – 1190 RPM

CONSIDERATION SHOULD BE GIVEN TO SETTLING OF THE FOUNDATION WHICH TENDS TO INCREASE ITS NATURAL FREQUENCIES DUE TO SOIL COMPRESSION. UNEVEN SETTLING OF THE FOUNDATION SHOULD BE AVOIDED.

THE FOUNDATION MUST BE A SINGLE POUR. COLD JOINTS OR CHIPPED FOUNDATIONS ARE NOT ACCEPTABLE.

THE FAN AND ITS DRIVE MOTOR MUST BE MOUNTED ON A COMMON FOUNDATION.

THE UTILIZATION OF PILES IS RECOMMENDED. THE ACTUAL FOUNDATION STIFFNESS SHOULD BE DETERMINED TO VERIFY THAT THE MINIMUM STIFFNESS VALUE IS ACHIEVED OR EXCEEDED WHETHER OR NOT PILES ARE USED.

PRELIMINARY RESONANT SPEED CALCULATIONS WILL BE CARRIED OUT BY TLT-BABCOCK USING MINIMUM STIFFNESS UNDER THE FAN OF 5.7 MILLION LBS/IN FOR BOTH THE HORIZONTAL AND VERTICAL DIRECTIONS. THE FOUNDATION DESIGNER SHOULD CALCULATE RESONANT SPEEDS WITH THE ACTUAL FOUNDATION STIFFNESS.

THE ROTATING MASS (FAN & MOTOR) IS 21,600 LBS.
THE $WR^2$ OF ROTATING MASS (FAN & MOTOR) IS 14,500 $LB-FT^2$
THE RATIO OF FOUNDATION MASS TO ROTATING MASS SHOULD BE APPROXIMATELY 25 TO 1.

MINIMUM PIER SIZES ARE GIVEN AS MOUNTING FOOT DIMENSION. FOUNDATION DESIGNER MAY INCREASE PIER SIZES AS REQUIRED.

A HIGH STRENGTH NON-SHRINK GROUT SHALL BE UTILIZED AFTER FINAL ALIGNMENT OF FAN COMPONENTS.

SHIMS SHALL BE LEFT IN PLACE WHEN GROUTING.

THE ABOVE INFORMATION IS SUBMITTED FOR INFORMATION PURPOSES ONLY. ULTIMATE DESIGN OF THE FOUNDATION SHALL REMAIN THE SOLE RESPONSIBILITY OF THE PURCHASER.

FOUNDATION LOADS

1. ALL LOADS PER ANCHOR UNLESS NOTED.
2. AXIAL LOADS ARE PARALLEL TO THE FAN CENTERLINE.
3. TRANSVERSE LOADS ARE NORMAL TO THE FAN CENTERLINE.
4. NEGATIVE VERTICAL LOADS ARE IN UPLIFT.
5. * DENOTES BLADE PASS LOAD.
6. ** DENOTES MOTOR SHORT CIRCUIT
7. DEAD LOADS INCLUDE SNOW LOAD

| POINT | LOAD DIRECTION | DEAD LOAD | WIND LOAD | STATIC OPERATING LOAD | DYNAMIC OPERATING LOAD (±) | TOTAL FOUNDATION LOAD |
|---|---|---|---|---|---|---|
| I | AXIAL | — | 338 | 785 | — | 1123 |
| | TRANSVERSE | — | 439 | 641 | — | 1080 |
| | VERTICAL | 936 | 484 | 363 | — | 1783 |
| II | AXIAL | — | — | 2735 | — | 2735 |
| | TRANSVERSE | — | 476 | 2169 | 600 | 3245 |
| | VERTICAL | 6323 | 721 | ±2534 | 1069 | 10646 |
| II* | AXIAL | — | — | 2735 | — | 2735 |
| | TRANSVERSE | — | 476 | 2169 | 8056 | 10701/-5411 |
| | VERTICAL | 6323 | 721 | ±2534 | 14336 | 23193/-10547 |
| II** | AXIAL | — | — | 2735 | — | 2735 |
| | TRANSVERSE | — | 476 | 2169 | 600 | 3245 |
| | VERTICAL | 6323 | 721 | ±2534 | 2723 | 12301 |
| III | AXIAL | — | — | 1062 | — | 1062 |
| | TRANSVERSE | — | 2734 | 1062 | — | 3796 |
| | VERTICAL | 3489 | 2194 | — | — | 5683 |
| IV | AXIAL | — | 2700 | — | — | 2700 |
| | TRANSVERSE | — | 2500 | — | — | 2500 |
| | VERTICAL | 9400 | ±4800 | — | — | 14200 |
| V | AXIAL | — | — | 25 | — | 25 |
| | TRANSVERSE | — | 130 | — | — | 130 |
| | VERTICAL | 720 | 95 | 140 | — | 955 |

ANCHOR BOLTS

| POINT | SIZE | PROJECTION | TORQUE |
|---|---|---|---|
| I, II, IV | 1.50 | 6" | 1040 FT-LBS |
| III | 1.25 | 6" | 600 FT-LBS |
| V | 3/4 | 4" | 120 FT-LBS |

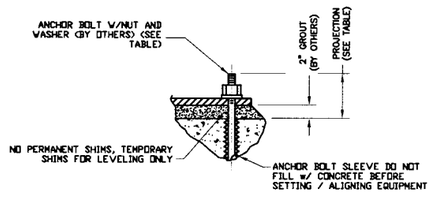


ANCHOR BOLT SECTION

AT POINT I, III & IV

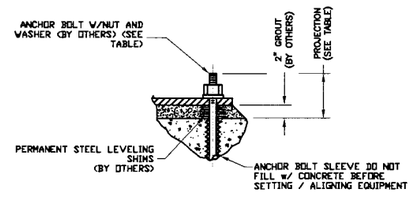


ANCHOR BOLT SECTION

AT POINT II

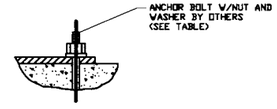


TYPICAL DRILL IN PLACE ANCHOR BOLT SECTION

AT POINT V

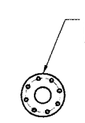


DETAIL D–D

SEE DRAWING 430200E FOR GENERAL ARRANGEMENT

THIS IS A CAD DRAWING
DO NOT REVISE MANUALLY

AUTOCADD FILENAME: 4302010192

CUSTOMER DATA

PROJECT : 573-2815
CUSTOMER : ENERGY WEST
CUST. PROJECT NO.: DEERCREEK
CUST. P.O. NO.: JC-C402

TLT-BABCOCK, INC.

DRAWN BY: JEFF
CHK'D BY:
PASSED BY:
APPVD. BY:
COMP. No. 92 DATE:
573-2815

FOUNDATION PLAN
GA 25/12.5-1
SUPPLY FAN
SYSTEM
2,000 HP MOTOR

THIS DRAWING IS THE PROPERTY OF: TLT-BABCOCK, INC. THIS DRAWING MAY NOT BE REPRODUCED OR DISCLOSED WITHOUT WRITTEN PERMISSION.

DWG. No. 430201 E REV 1

DO NOT SCALE-USE DIMENSIONS ONLY SCALE: NTS ENERGY WEST

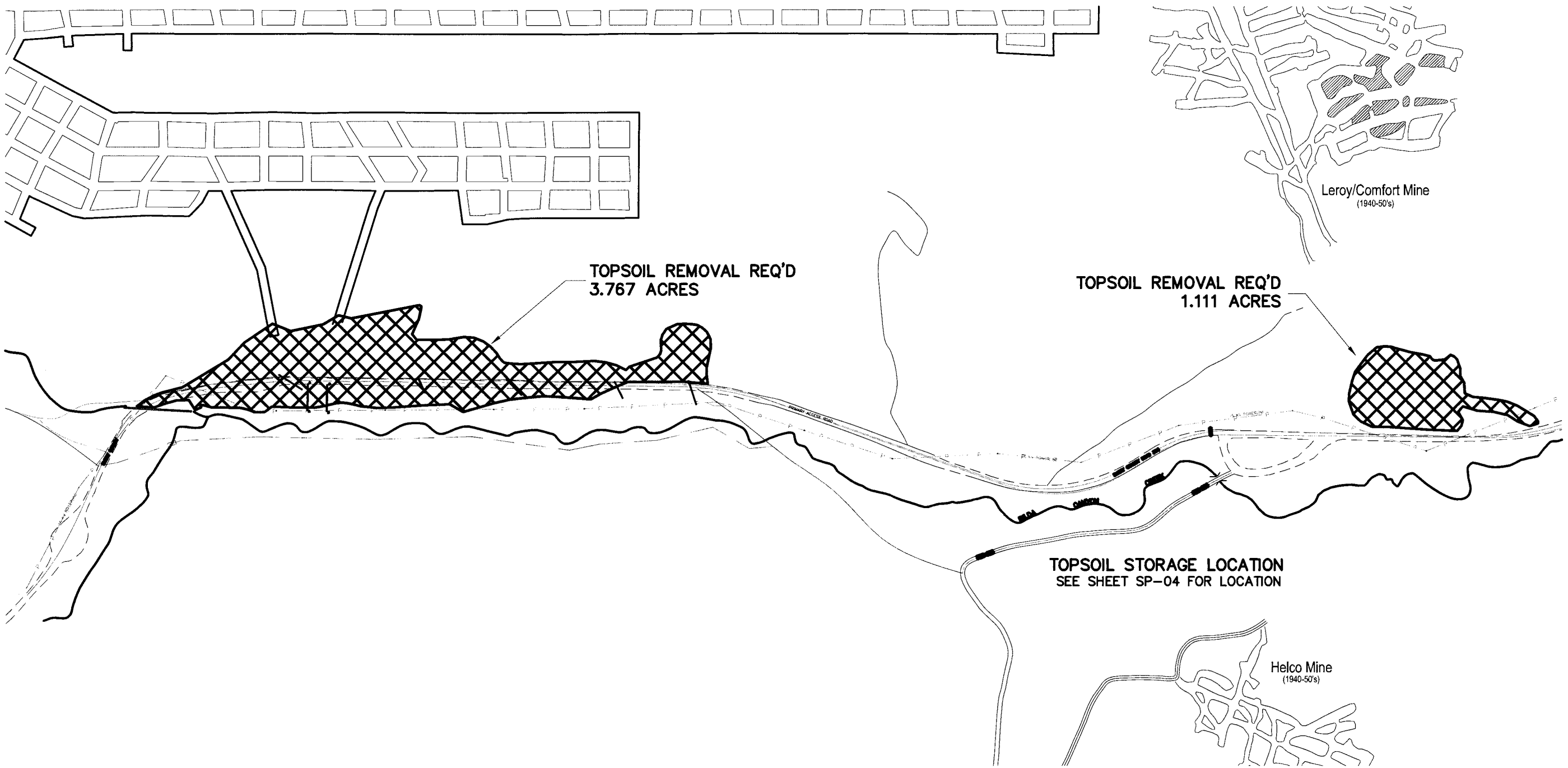


| NO. | DATE | REMARKS |
|---|---|---|
| | | DESIGN CHANGE BY PARCELS REQUEST |
| | | ORIGINAL SUBMISSION FOR AUTHORIZATION |

REVISIONS

SCALE: 1" = 250'

DWG NAME: SP-00

SHT SET: ####

DWG CREATED: 05/01/2006

PEN TBL: hidrcnt4qx2600.ctb

LAST UPDATE: 7/25/2006

Jones & DeMille Engineering
1535 South 100 West - Richfield, Utah 84701
Phone (435) 896-8266 Fax (435) 896-8268
www.jonesanddemille.com

| | | | |
|---|---|---|---|
| DESIGN: J.L.A. | 05-06 | CHECK: B.R.B. | 05-06 |
| DRAWN: J.L.A. | 05-06 | CHECK: B.R.B. | 05-06 |
| QUANT: J.L.A. | 05-06 | CHECK: B.R.B. | 05-06 |

REVIEW

DATE: -

BY: -

APPROVAL RECOMM: DATE PROJECT DESIGN ENGINEER

APPROVED: DATE

# ENERGY WEST

## RILDA CANYON FACILITIES

## PHASE I - TOPSOIL REMOVAL PLAN

PROJECT NUMBER: 0603-008

EMERY COUNTY

SHEET NO. SP-00

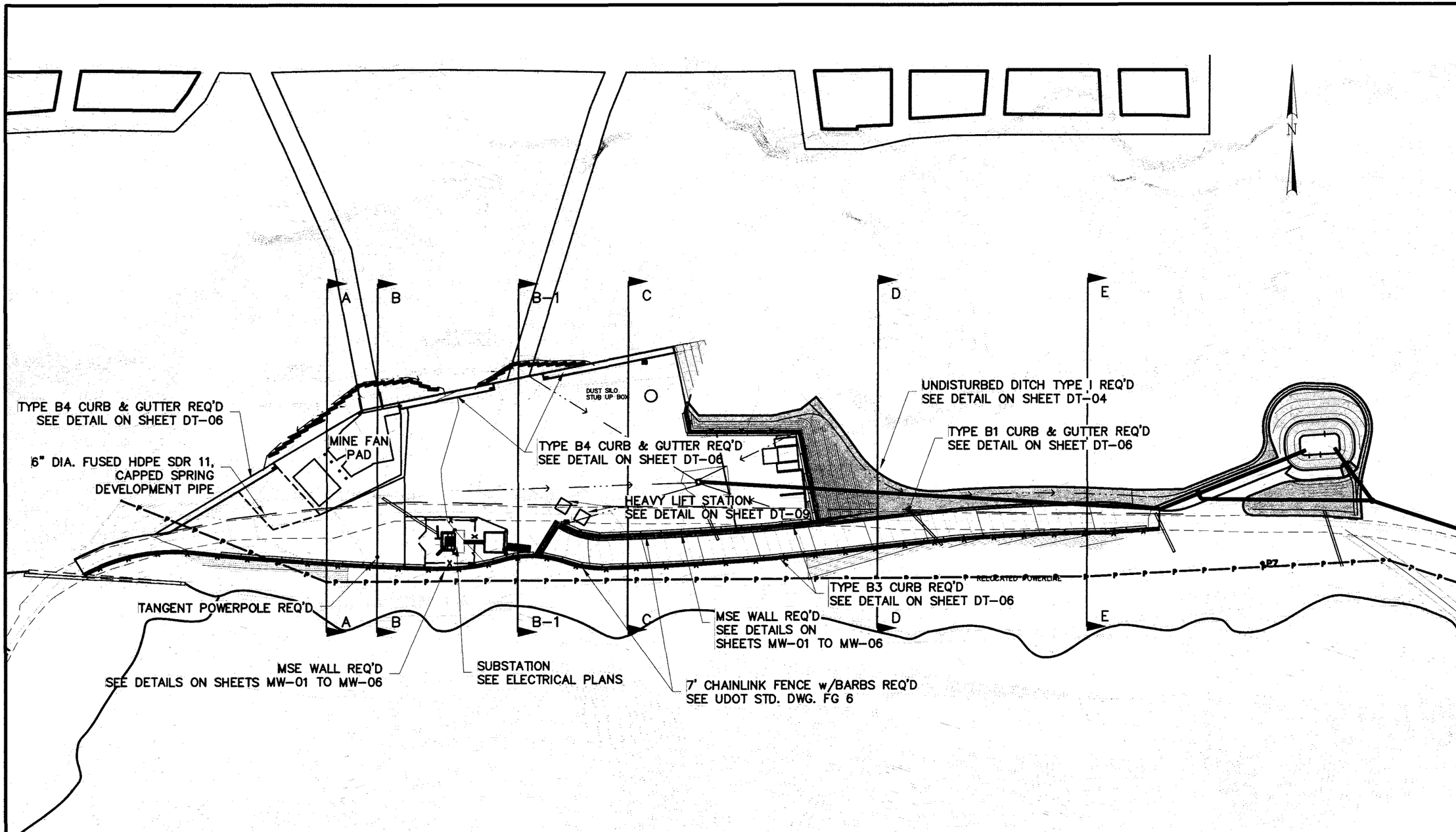


NOTES:
1. FENCE BARBS TO POINT TOWARD PAD AT ALL LOCATIONS.
2. SEE SECTIONS A–A, B–B, B1–B1, C–C, D–D, & E–E ON SHEETS SP–01A

| NO. | DATE | REMARKS |
|---|---|---|
| | DESIGN REVIEW | MLR'S / PARCELS REQUEST |
| | CORR. BY | PARCELS REQ'D BY |
| | ORIGINAL SUBMISSION FOR AUTHORIZATION | |

REVISIONS

SCALE: 1" = 100'
DWG NAME: SP-01
SHT SET: ####
DWG CREATED: 05/01/2006
PEN TBL: tstmnt-h2600.ctb
LAST UPDATE: 7/25/2006

Jones & DeMille Engineering
1535 South 100 West - Richfield, Utah 84701
Phone (435) 896-8266 Fax (435) 896-8268
www.jonesanddemille.com

| | | | |
|---|---|---|---|
| DESIGN: J.L.A. 05-06 | CHECK: B.R.B. 05-06 | REVIEW | |
| DRAWN: J.L.A. 05-06 | CHECK: B.R.B. 05-06 | DATE: | |
| QUANT: J.L.A. 05-06 | CHECK: B.R.B. 05-06 | BY: | |

APPROVAL RECOMM: DATE PROJECT DESIGN ENGINEER
APPROVED: DATE

ENERGY WEST
RILDA CANYON FACILITIES
PHASE I - PAD SITE PLAN
PROJECT NUMBER: 0603-008

EMERY COUNTY

SHEET NO. SP-01

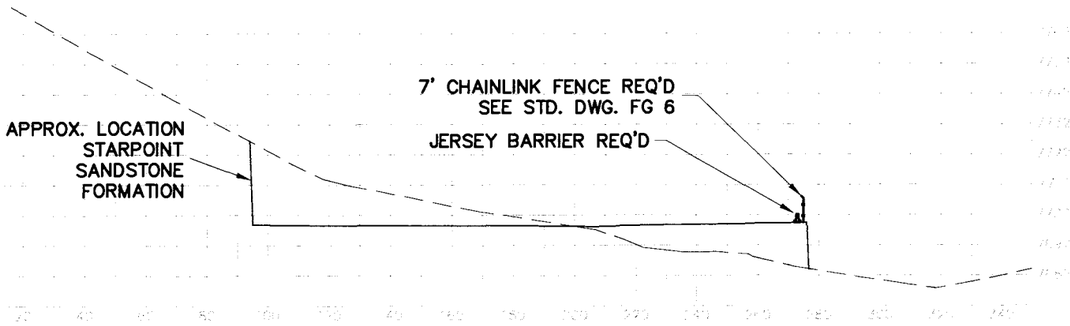


SECTION B1–B1

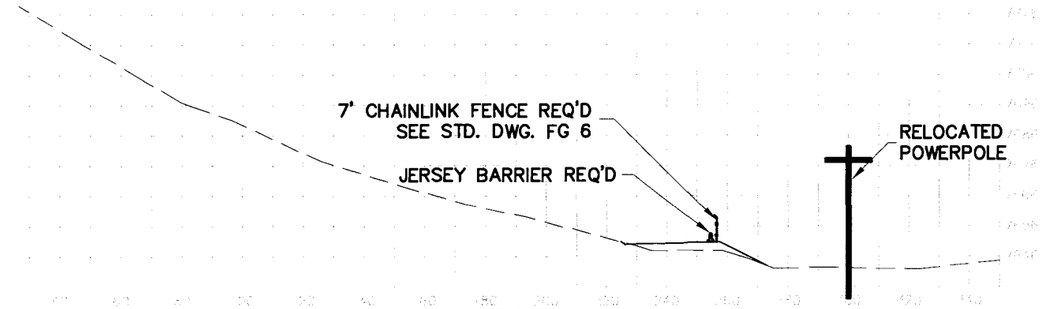


SECTION E–E

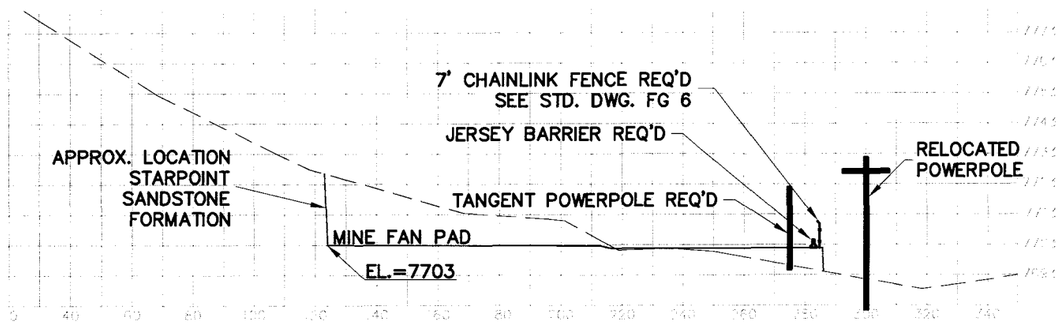


SECTION B–B

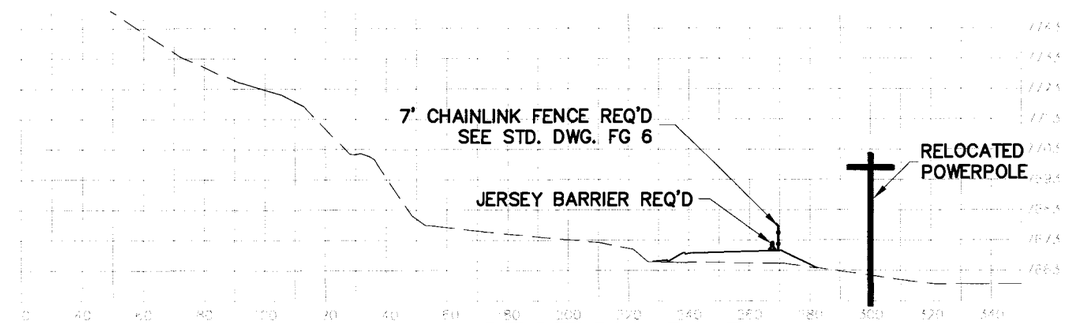


SECTION D–D

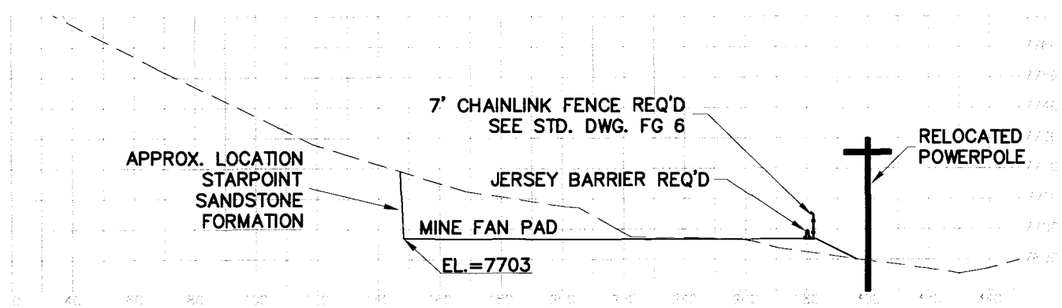


SECTION A–A

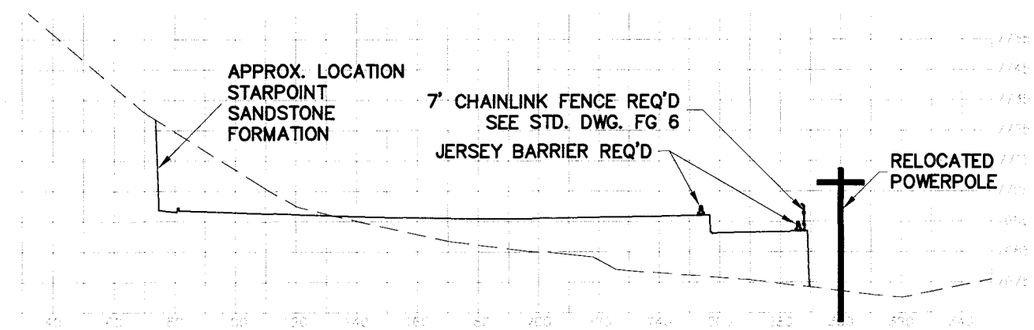


SECTION C–C

NOTE:
1. SEE SHEET TS–01 FOR ROADWAY & PAD TYPICAL SECTIONS.
2. SEE SHEET SP–01 FOR SECTION LOCATIONS
3. CHAINLINK FENCE BARBS TO POINT INTO PAD.
4. POWER POLES RELOCATED BY UTAH POWER.

| NO. | DATE | REVISIONS | REMARKS |
|---|---|---|---|
| | | ORIGINAL SUBMISSION FOR AUTHORIZATION | |

SCALE: 1" = 50'
DWG NAME: SP-01
SHT SET: ####
DWG CREATED: 05/01/2006
PEN TBL: rsinnd-hp2600.ctb
LAST UPDATE: 7/25/2006

Jones & DeMille Engineering
1535 South 100 West - Richfield, Utah 84701
Phone (435) 896-8266 Fax (435) 896-8268
www.jonesandDemille.com

| | | | |
|---|---|---|---|
| DESIGN: J.L.A. 05-06 | CHECK: B.R.B. 05-06 | REVIEW | |
| DRAWN: J.L.A. 05-06 | CHECK: B.R.B. 05-06 | DATE: - | |
| QUANT: J.L.A. 05-06 | CHECK: B.R.B. 05-06 | BY: - | |

APPROVAL RECOMM: DATE PROJECT DESIGN ENGINEER
APPROVED: DATE

ENERGY WEST
RILDA CANYON FACILITIES
PHASE I - PAD SECTIONS
PROJECT NUMBER: 0603-008

EMERY COUNTY

SHEET NO. SP-01A

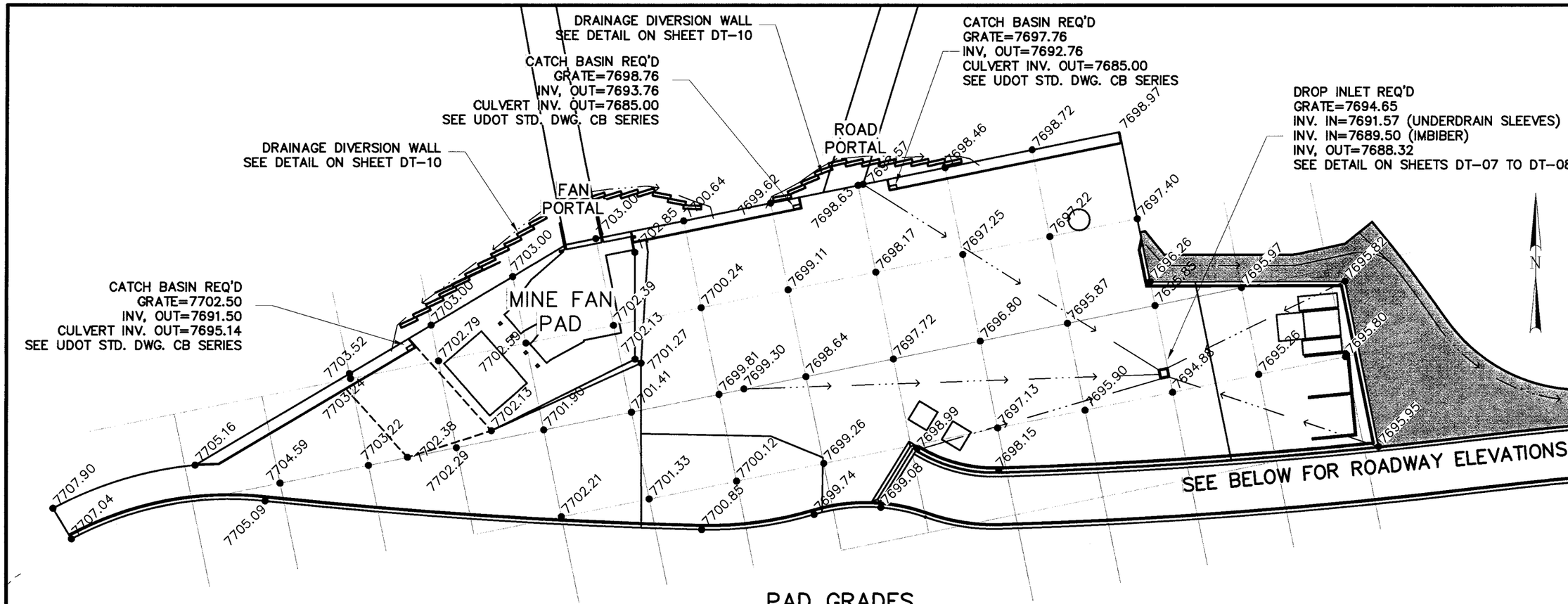


## PAD GRADES

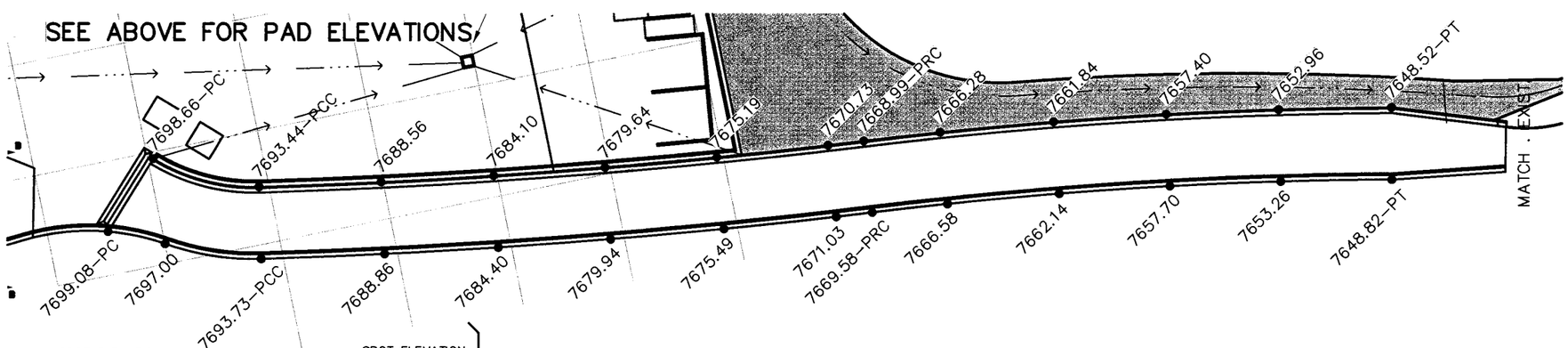


## ROAD GRADES

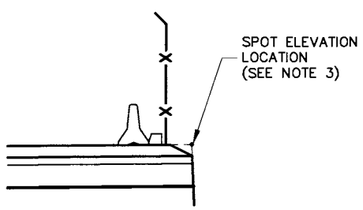


SECTION A–A

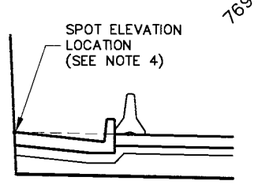


SECTION B–B

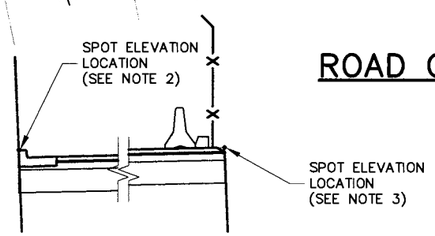


SECTION C–C

NOTE:
1. ELEVATIONS ARE AT FINISHED GRADE.
2. CURB ELEVATIONS ARE AT TOP BACK OF CURB.
3. EDGE OF PAD ELEVATIONS ALONG THE MSE WALL ARE AT THE PROJECTED INTERSECTION OF THE FINISHED SURFACE AND THE MSE WALL FACE.
4. LIP OF GUTTER, TYPE B4 ELEVATION IS FINISHED GRADE PROJECTED TO APPROX. STARPOINT SANDSTONE FORMATION.

| NO. | DATE | REVISIONS | REMARKS |
|---|---|---|---|
| | | ORIGINAL SUBMISSION FOR AUTHORIZATION | |

SCALE: 1" = 60'
DWG NAME: SP-01
SHT SET: ####
DWG CREATED: 06/13/2006
PEN TBL: 1dnr24x2000.ctb
LAST UPDATE: 7/25/2006

Jones & DeMille Engineering
1535 South 100 West · Richfield, Utah 84701
Phone (435) 896-8266 Fax (435) 896-8268
www.jonesandDemille.com

| | | | |
|---|---|---|---|
| DESIGN: J.L.A. 06-06 | CHECK: B.R.B. 06-06 | REVIEW | |
| DRAWN: J.L.A. 06-06 | CHECK: B.R.B. 06-06 | DATE: - | |
| QUANT: J.L.A. 06-06 | CHECK: B.R.B. 06-06 | BY: - | |

APPROVAL RECOMM: DATE PROJECT DESIGN ENGINEER
APPROVED: DATE

ENERGY WEST
RILDA CANYON FACILITIES
PHASE I - PAD GRADING PLAN
PROJECT NUMBER: 0603-008

EMERY COUNTY

SHEET NO. SP-01B

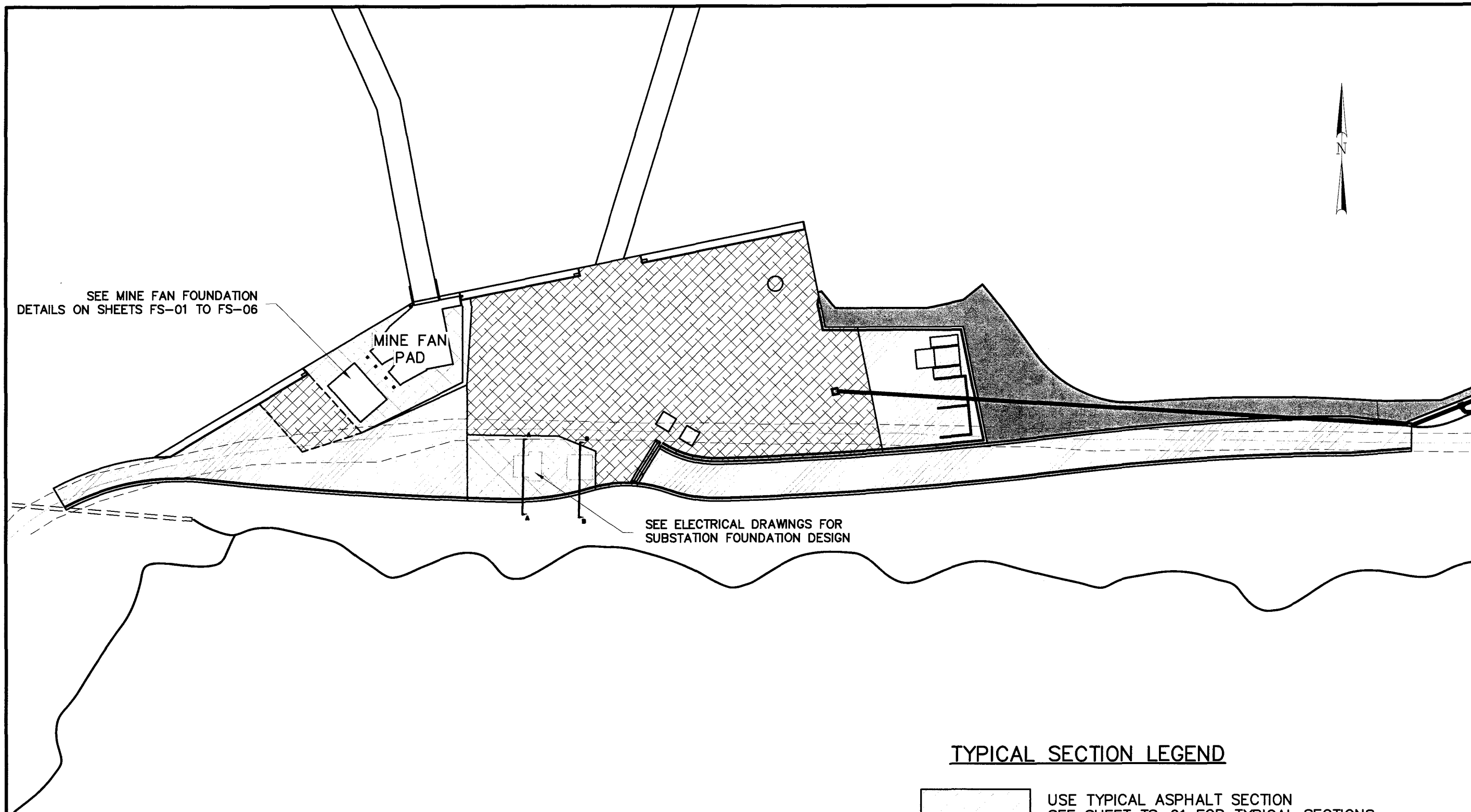


## TYPICAL SECTION LEGEND

USE TYPICAL ASPHALT SECTION
SEE SHEET TS-01 FOR TYPICAL SECTIONS

USE TYPICAL CONCRETE SECTION, 4" FLATWORK
SEE SHEET TS-01 FOR TYPICAL SECTIONS

USE TYPICAL SECTION, 9" REINFORCED CONCRETE
SEE SHEET TS-01 FOR TYPICAL SECTIONS

LOOSE RIPRAP ON FILL SLOPE REQ'D
SEE DETAILS ON SHEET DT-04

| NO. | DATE | DESIGN MADE REV. BY | PROJECT REQUEST CORR. BY AFFECTED BY | REMARKS |
|---|---|---|---|---|
| | | ORIGINAL SUBMISSION FOR AUTHORIZATION | | |

REVISIONS

SCALE: 1" = 80'
DWG NAME: SP-01
SHT SET: ####
DWG CREATED: 05/01/2006
PEN TBL: tphsrdchp3600.ctb
LAST UPDATE: 7/25/2006

Jones & DeMille Engineering
1535 South 100 West - Richfield, Utah 84701
Phone (435) 896-8266 Fax (435) 896-8268
www.jonesanddemille.com

| | | | |
|---|---|---|---|
| DESIGN: J.L.A. 05-06 | CHECK: B.R.B. 05-06 | REVIEW | |
| DRAWN: J.L.A. 05-06 | CHECK: B.R.B. 05-06 | DATE: | |
| QUANT: J.L.A. 05-06 | CHECK: B.R.B. 05-06 | BY: | |

APPROVAL RECOMM: _____ DATE _____ PROJECT DESIGN ENGINEER
APPROVED: _____ DATE

ENERGY WEST
RILDA CANYON FACILITIES
PHASE I - PAD TYPICAL LOCATION
PROJECT NUMBER: 0603-008

EMERY
COUNTY

SHEET NO. SP-01C

NOTE:
MAINTAIN DRAINAGE AWAY FROM TOE OF MSE WALL.

DRAINAGE DIVERSION WALL
SEE DETAIL ON SHEET DT-10

CATCH BASIN REQ'D
GRATE=7698.76
INV, OUT=7693.76
CULVERT INV. OUT=7685.00
SEE UDOT STD. DWG. CB SERIES

DRAINAGE DIVERSION WALL
SEE DETAIL ON SHEET DT-10

CATCH BASIN REQ'D
GRATE=7697.76
INV, OUT=7692.76
CULVERT INV. OUT=7685.00
SEE UDOT STD. DWG. CB SERIES

DROP INLET REQ'D
GRATE=7694.65
INV. IN=7691.57 (UNDERDRAIN SLEEVES)
INV. IN=7689.50 (IMBIBER)
INV, OUT=7688.32
SEE DETAIL ON SHEETS DT-07 TO DT-08

ROAD PORTAL

FAN PORTAL

DUST SILO
STUB UP BOX

SLOPE = 4.13%

SLOPE = 4.13%

CATCH BASIN REQ'D
GRATE=7702.50
INV, OUT=7691.50
CULVERT INV. OUT=7695.14
SEE UDOT STD. DWG. CB SERIES

MINE FAN PAD

15" DIA. CORRUGATED PIPE CULVERT

6" SCH. 40 PIPE, IMBIBER DRAIN

15" DIA. CORRUGATED PIPE CULVERT
SLOPE=2.11%

LOOSE RIPRAP AT OUTLET REQ'D
SEE DETAIL ON SHEET DT-03

LOOSE RIPRAP AT OUTLET REQ'D
SEE DETAIL ON SHEET DT-03

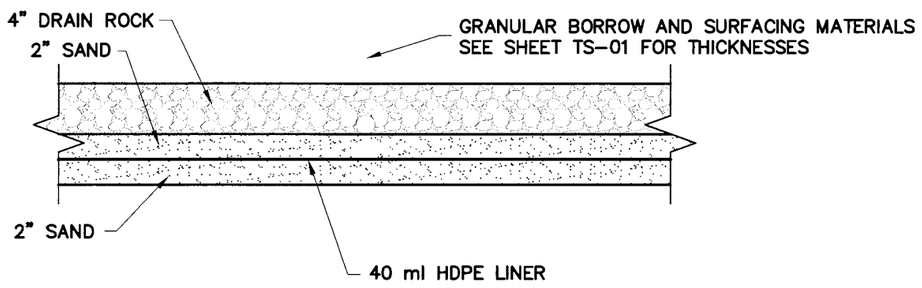


UNDERDRAIN LINER DETAIL

LEGEND

18 INCH DIA. PIPE
15" DIA. CORRUGATED PIPE CULVERT
6" SCH. 40 PIPE, IMBIBER DRAIN

| NO. | DATE | REVISIONS | REMARKS |
|---|---|---|---|
| | | DESIGN REVISION CORR. BY: J.L.A. / PROJECT REQUEST PER: B.R.B. | |
| | | ORIGINAL SUBMISSION FOR AUTHORIZATION | |

SCALE: 1" = 60'
DWG NAME: SP-01
SHT SET: ####
DWG CREATED: 06/13/2006
PEN TBL: 1stnd3-hp2000.ctb
LAST UPDATE: 7/25/2006

Jones & DeMille Engineering
1535 South 100 West - Richfield, Utah 84701
Phone (435) 896-8266 Fax (435) 896-8268
www.jonesanddemille.com

| | | | |
|---|---|---|---|
| DESIGN: | J.L.A. 06-06 | CHECK: B.R.B. 06-06 | REVIEW |
| DRAWN: | J.L.A. 06-06 | CHECK: B.R.B. 06-06 | DATE: |
| COUNT: | J.L.A. 06-06 | CHECK: B.R.B. 06-06 | BY: |

APPROVAL RECOMM: DATE PROJECT DESIGN ENGINEER
APPROVED: DATE

ENERGY WEST
RILDA CANYON FACILITIES
PHASE I - PAD UNDERDRAIN PLAN
PROJECT NUMBER: 0603-008

EMERY
COUNTY

SHEET NO. SP-01D

SEE SHEET SP-01 FOR PAD SITE PLAN

SEDIMENT BASIN:
TOP OF DIKE EL. = 7641.50
BOTTOM OF POND EL. = 7631.50
OVERFLOW EL. = 7638.50
EMERGENCY SPILLWAY EL. = 7639.50

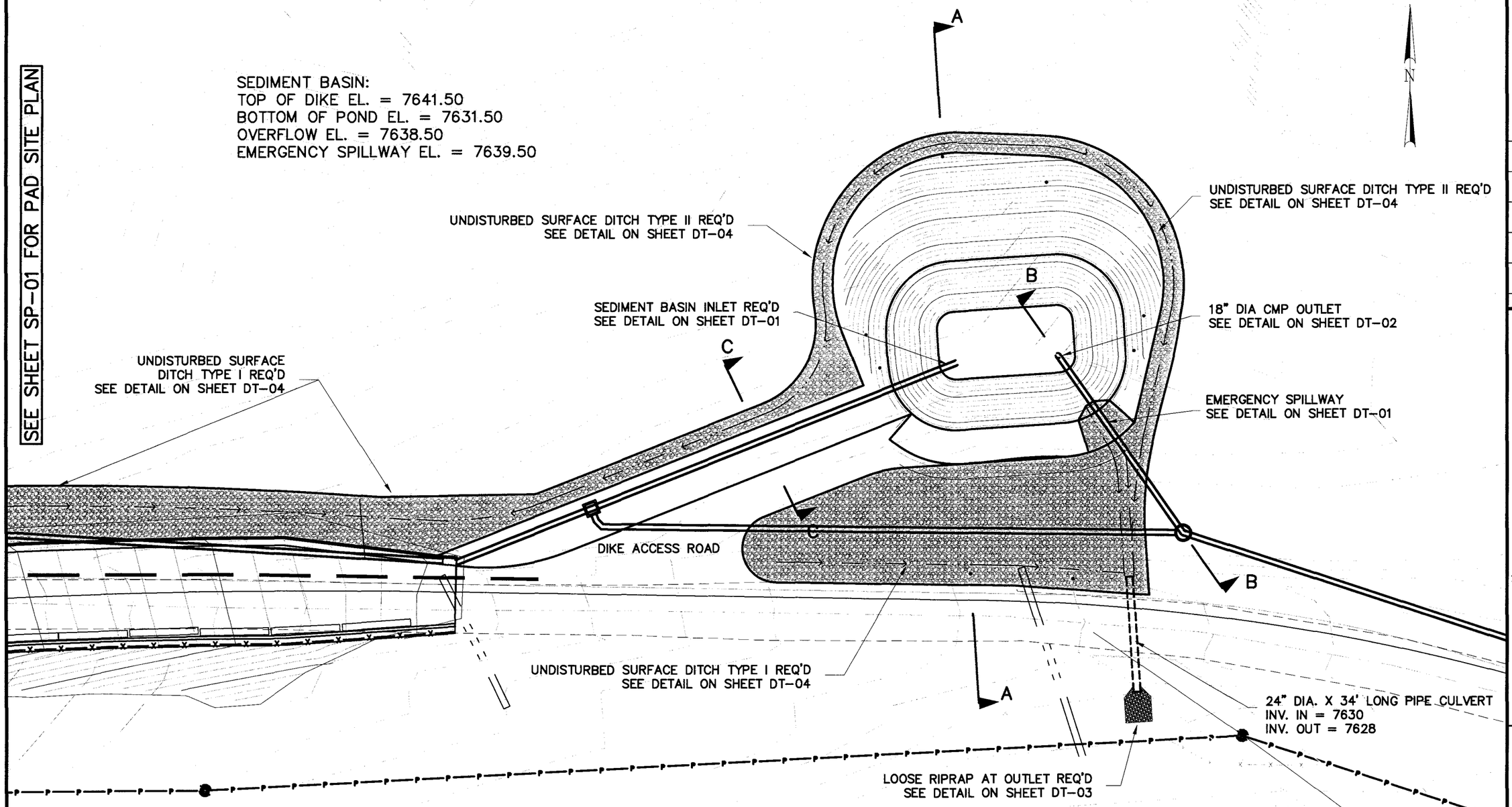


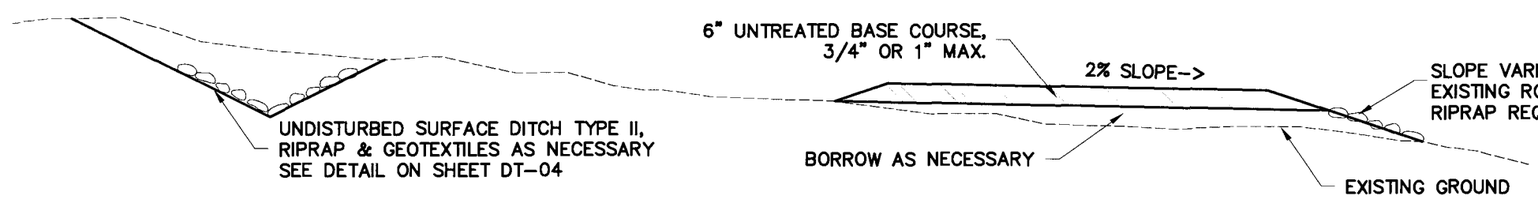


## SECTION C–C
DIKE ACCESS ROAD

SEE SHEET SP-02A FOR
SECTION A–A & SECTION B–B

| NO. | DATE | REMARKS |
|---|---|---|
| | | DESIGN CHANGES PER CORP. REQUEST |
| | | ORIGINAL SUBMISSION FOR AUTHORIZATION |

REVISIONS

SCALE: 1" = 20'
DWG NAME: SP-02
SHT SET: ####
DWG CREATED: 05/01/2006
PEN TBL: ratmnd4-r2000.ctb
LAST UPDATE: 7/25/2006


Jones & DeMille Engineering
1535 South 100 West - Richfield, Utah 84701
Phone (435) 896-8266 Fax (435) 896-8268
www.jonesandDemille.com


| | | | |
|---|---|---|---|
| DESIGN: J.L.A. 05-06 | CHECK: B.R.B. 05-06 | REVIEW | |
| DRAWN: J.L.A. 05-06 | CHECK: B.R.B. 05-06 | DATE: | |
| QUANT: J.L.A. 05-06 | CHECK: B.R.B. 05-06 | BY: | |

APPROVAL RECOMM: DATE PROJECT DESIGN ENGINEER
APPROVED: DATE

ENERGY WEST
RILDA CANYON FACILITIES
PHASE I - SEDIMENT BASIN SITE PLAN
PROJECT NUMBER: 0603-008

EMERY
COUNTY

SHEET NO. SP-02

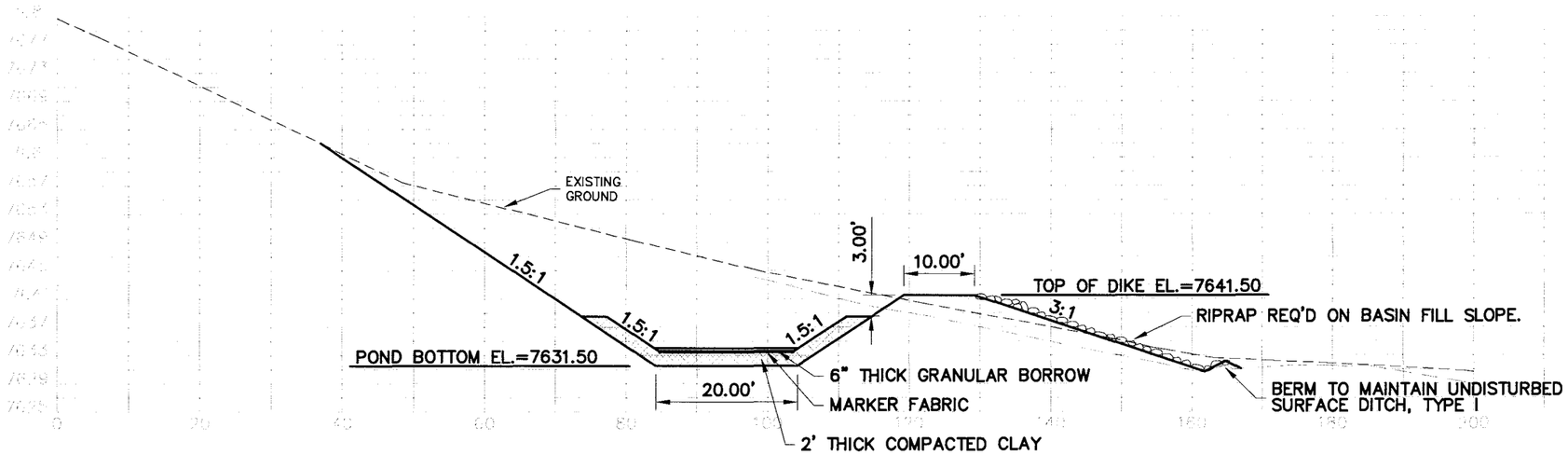


## SECTION A–A

SCALE: 1"=20'

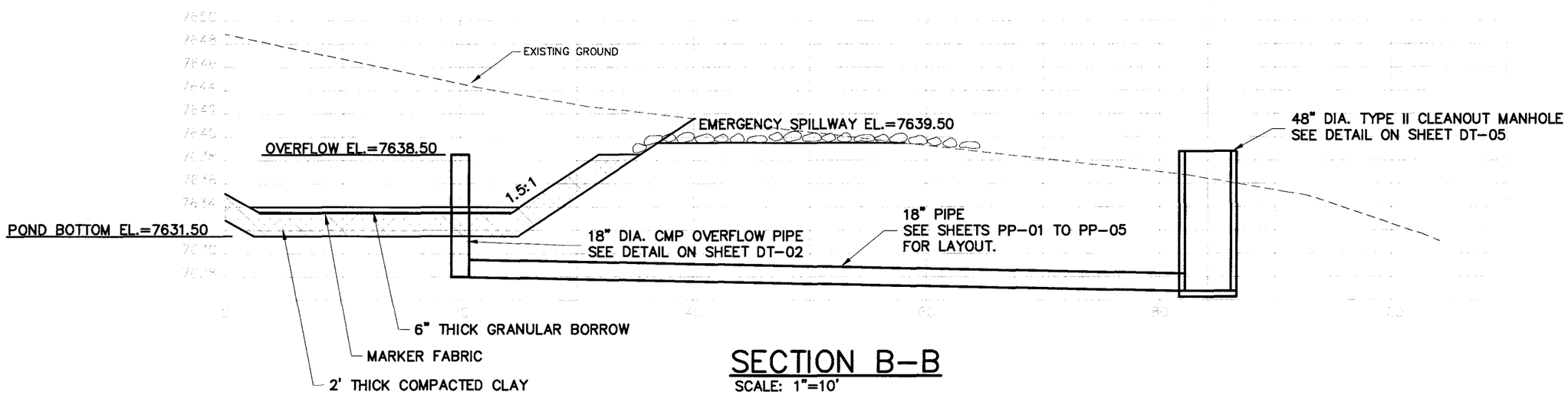


## SECTION B–B

SCALE: 1"=10'

| NO. | DATE | DESIGN REV. BY | MAPS, CORR. BY | PARCELS AFFECTED | REQUEST BY | REMARKS |
|---|---|---|---|---|---|---|
| | | ORIGINAL SUBMISSION FOR AUTHORIZATION | | | | |

REVISIONS

SCALE: 1" = 80'

DWG NAME: SP-02
SHT SET: ####

DWG CREATED: 05/01/2006
PEN TBL: _latmode4u2600.ctb

LAST UPDATE: 7/25/2006

Jones & DeMille Engineering
1535 South 100 West - Richfield, Utah 84701
Phone (435) 896-8266 Fax (435) 896-8268
www.jonesanddemille.com

| | | | |
|---|---|---|---|
| DESIGN: J.L.A. 05-06 | CHECK: B.R.B. 05-06 | REVIEW | |
| DRAWN: J.L.A. 05-06 | CHECK: B.R.B. 05-06 | DATE: | |
| QUANT: J.L.A. 05-06 | CHECK: B.R.B. 05-06 | BY: | |

APPROVAL RECOMM: DATE PROJECT DESIGN ENGINEER

APPROVED: DATE

ENERGY WEST

RILDA CANYON FACILITIES

PHASE I - SEDIMENT BASIN SECTIONS

PROJECT NUMBER: 0603-008

EMERY
COUNTY

SHEET NO. SP-02A

# PRELIMINARY
## SUBJECT TO REVISION AFTER COAL REMOVAL & TOPOGRAPHIC SURVEY

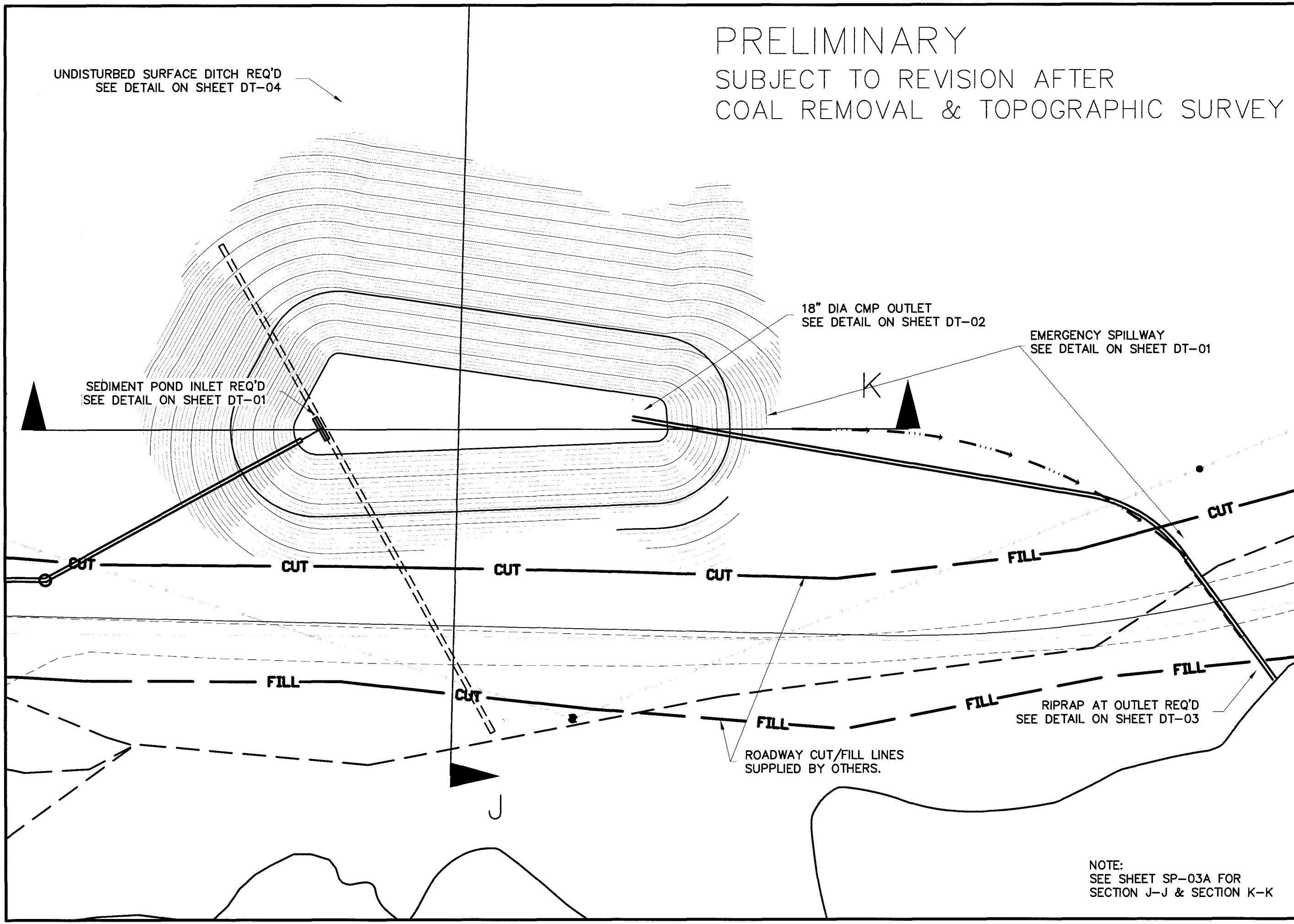


NOTE:
SEE SHEET SP-03A FOR
SECTION J-J & SECTION K-K

| NO. | DATE | DESIGN REVISION | MAPS CORRECTED | PARCELS INSPECTED | REQUEST BY | REMARKS |
|---|---|---|---|---|---|---|
| | | ORIGINAL SUBMISSION FOR AUTHORIZATION | | | | |

REVISIONS

SCALE: 1" = 40'
DWG NAME: SP-03
SHT SET: ####
DWG CREATED: 05/01/2006
PEN TBL: Landrdy2800.ctb
LAST UPDATE: 7/25/2006


Jones & DeMille Engineering
1535 South 100 West - Richfield, Utah 84701
Phone (435) 896-8266 Fax (435) 896-8268
www.jonesanddemille.com


| | | | |
|---|---|---|---|
| DESIGN: J.L.A. 05-06 | CHECK: B.R.B. 05-06 | REVIEW | |
| DRAWN: J.L.A. 05-06 | CHECK: B.R.B. 05-06 | DATE: | |
| QUANT: J.L.A. 05-06 | CHECK: B.R.B. 05-06 | BY: | |

APPROVAL RECOMM: DATE PROJECT DESIGN ENGINEER
APPROVED: DATE

ENERGY WEST
RILDA CANYON FACILITIES
PHASE I - LOWER POND SITE PLAN
PROJECT NUMBER: 0603-008

EMERY
COUNTY

SHEET NO. SP-03

# PRELIMINARY

SUBJECT TO REVISION AFTER
COAL REMOVAL & TOPOGRAPHIC SURVEY

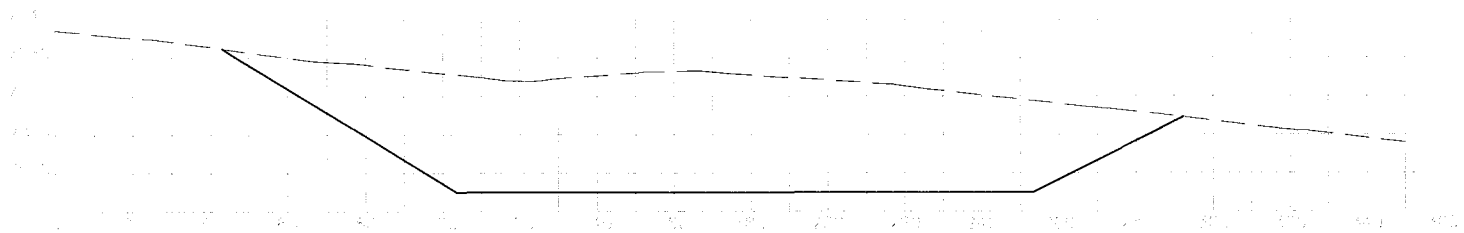

SECTION K–K

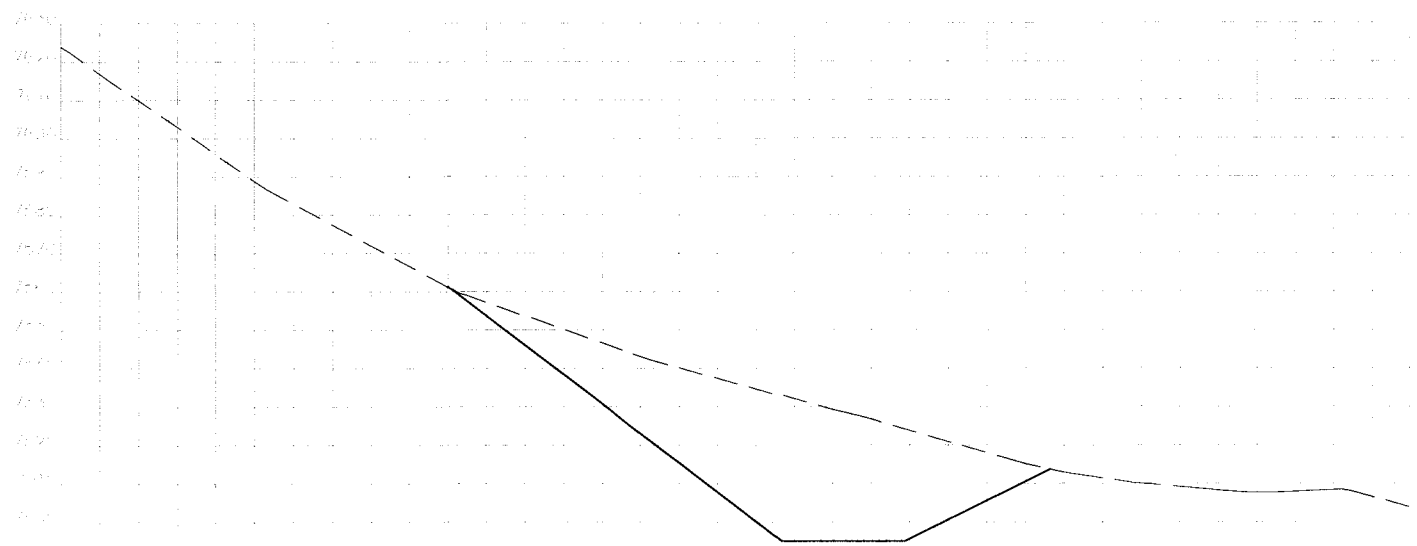

SECTION J–J

| NO. | DATE | REVISIONS | REQUEST BY |
|---|---|---|---|
| | | ORIGINAL SUBMISSION FOR AUTHORIZATION | |

SCALE: 1" = 50'

DWG NAME: SP-03
SHT SET: ####

DWG CREATED: 05/01/2006
PEN TBL: ssbnd2-fq2600.ctb

LAST UPDATE: 7/25/2006


Jones & DeMille Engineering
1338 South 100 West - Richfield, Utah 84701
Phone (435) 896-8266 Fax (435) 896-8268
www.jonesanddemille.com


| | | | |
|---|---|---|---|
| DESIGN: J.L.A. 05-06 | CHECK: B.R.B. 05-06 | REVIEW | |
| DRAWN: J.L.A. 05-06 | CHECK: B.R.B. 05-06 | DATE: . | |
| QUANT: J.L.A. 05-06 | CHECK: B.R.B. 05-06 | BY: . | |

APPROVAL RECOMM: DATE: PROJECT DESIGN ENGINEER

APPROVED: DATE:

ENERGY WEST

RILDA CANYON FACILITIES

PHASE I - LOWER POND SECTIONS

PROJECT NUMBER: 0603-008

EMERY
COUNTY

SHEET NO. SP-03A

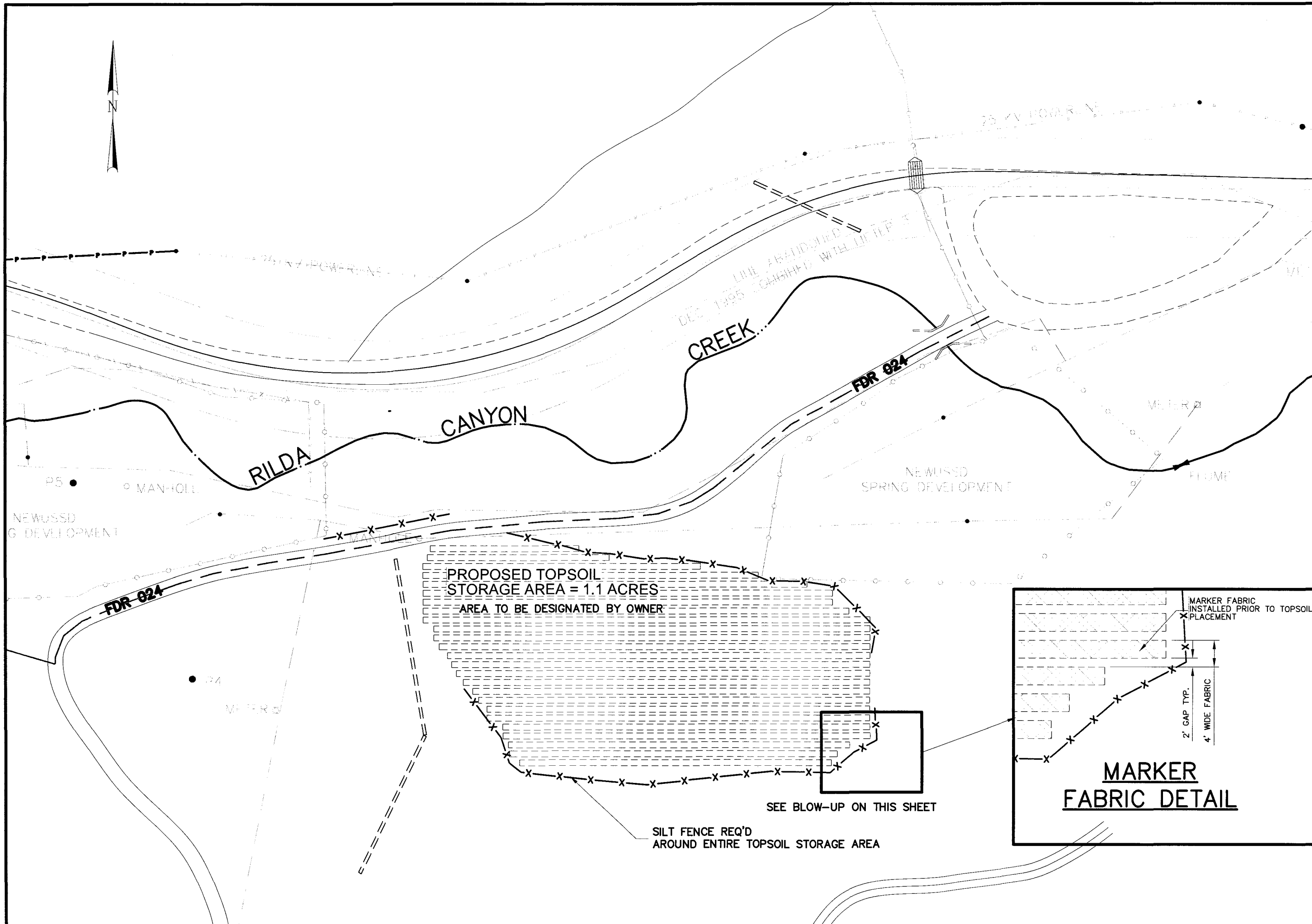


| NO. | DATE | REMARKS |
|---|---|---|
| | DESIGN REVIEW | LOAS REPORTED REQUEST CORR. BY PARCELS BY |
| | | ORIGINAL SUBMISSION FOR AUTHORIZATION |

REVISIONS

SCALE: 1" = 40'

DWG NAME: SP-04
SHT SET: ####

DWG CREATED: 05/01/2006
PEN TBL: rdmod-hz2000.tb

LAST UPDATE: 7/25/2006

Jones & DeMille Engineering
1535 South 100 West - Richfield, Utah 84701
Phone (435) 896-8266 Fax (435) 896-8268
www.jonesanddemille.com

| | | | |
|---|---|---|---|
| DESIGN: J.L.A. 05-06 | CHECK: B.R.B. 05-06 | REVIEW | |
| DRAWN: J.L.A. 05-06 | CHECK: B.R.B. 05-06 | DATE: - | |
| QUANT: J.L.A. 05-06 | CHECK: B.R.B. 05-06 | BY: - | |

APPROVAL RECOMM: DATE PROJECT DESIGN ENGINEER
APPROVED: DATE

ENERGY WEST

RILDA CANYON FACILITIES

PHASE I - TOPSOIL STORAGE PLAN

PROJECT NUMBER: 0603-008

EMERY
COUNTY

SHEET NO. SP-04

# PRELIMINARY
## SUBJECT TO REVISION

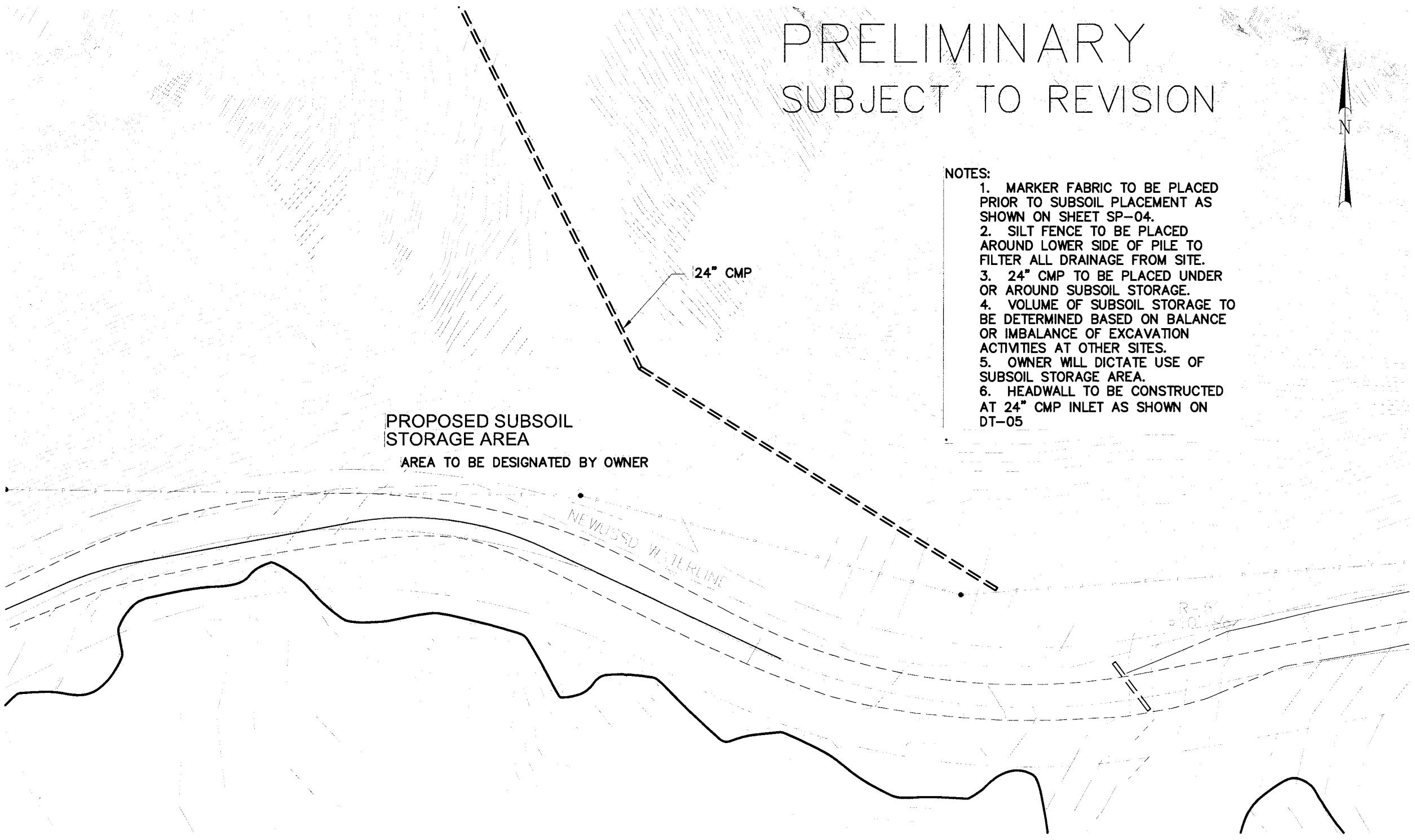


NOTES:

1. MARKER FABRIC TO BE PLACED PRIOR TO SUBSOIL PLACEMENT AS SHOWN ON SHEET SP-04.
2. SILT FENCE TO BE PLACED AROUND LOWER SIDE OF PILE TO FILTER ALL DRAINAGE FROM SITE.
3. 24" CMP TO BE PLACED UNDER OR AROUND SUBSOIL STORAGE.
4. VOLUME OF SUBSOIL STORAGE TO BE DETERMINED BASED ON BALANCE OR IMBALANCE OF EXCAVATION ACTIVITIES AT OTHER SITES.
5. OWNER WILL DICTATE USE OF SUBSOIL STORAGE AREA.
6. HEADWALL TO BE CONSTRUCTED AT 24" CMP INLET AS SHOWN ON DT-05

| NO. | DATE | REMARKS |
|---|---|---|
| | DESIGN ESTIMATE | MAPS, CORS, PARCELS REVIEWED BY |
| | | REQUEST FOR ORIGINAL SUBMISSION FOR AUTHORIZATION |

REVISIONS

SCALE: 1" = 40'

DWG NAME: SP-05
SHT SET: ####

DWG CREATED: 05/01/2006
PEN TBL: 15mm4-h2600.ctb

LAST UPDATE: 7/25/2006


Jones & DeMille Engineering
1535 South 100 West - Richfield, Utah 84701
Phone (435) 896-8266 Fax (435) 896-8268
www.jonesandDemille.com


| | | | |
|---|---|---|---|
| DESIGN: | J.L.A. 05-06 | CHECK: | B.R.B. 05-06 |
| DRAWN: | J.L.A. 05-06 | CHECK: | B.R.B. 05-06 |
| QUANT: | J.L.A. 05-06 | CHECK: | B.R.B. 05-06 |

REVIEW
DATE: .
BY: .

APPROVAL RECOMM: _____ DATE _____ PROJECT DESIGN ENGINEER
APPROVED: _____ DATE _____

ENERGY WEST

RILDA CANYON FACILITIES

PHASE I - SUBSOIL STORAGE PLAN

PROJECT NUMBER: 0603-008

EMERY
COUNTY

SHEET NO. SP-05

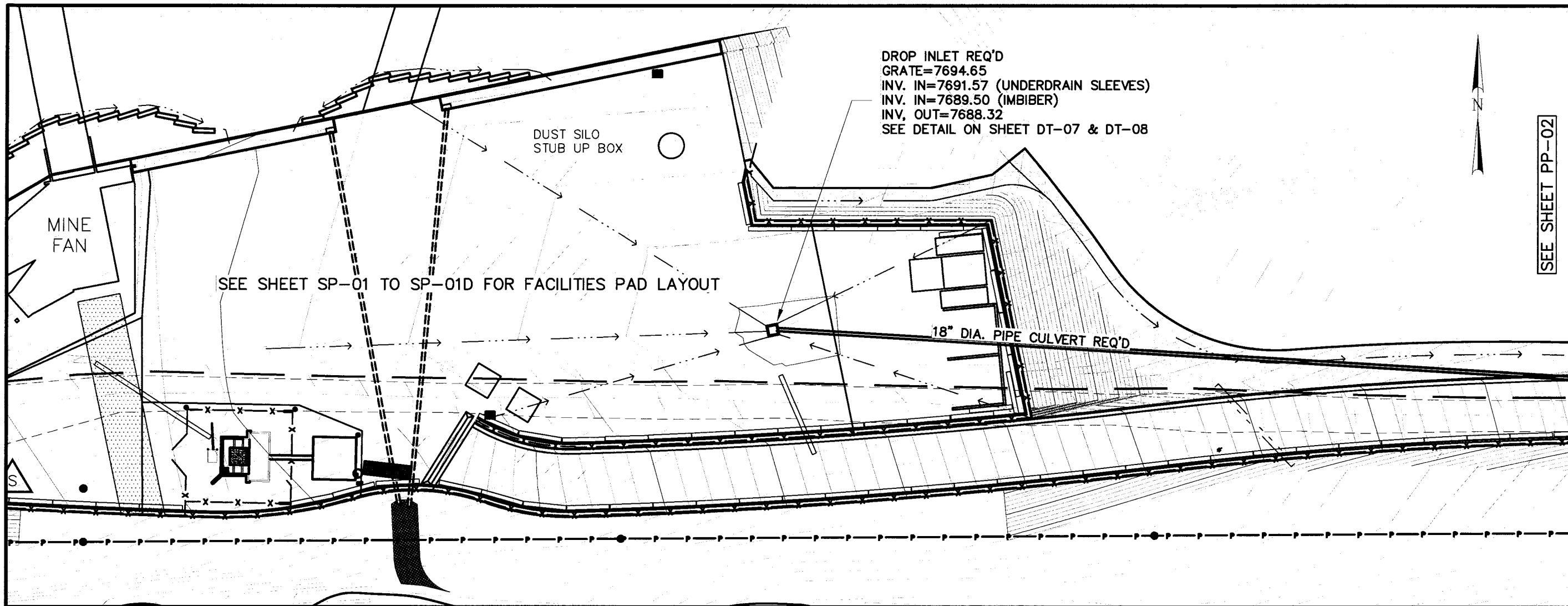


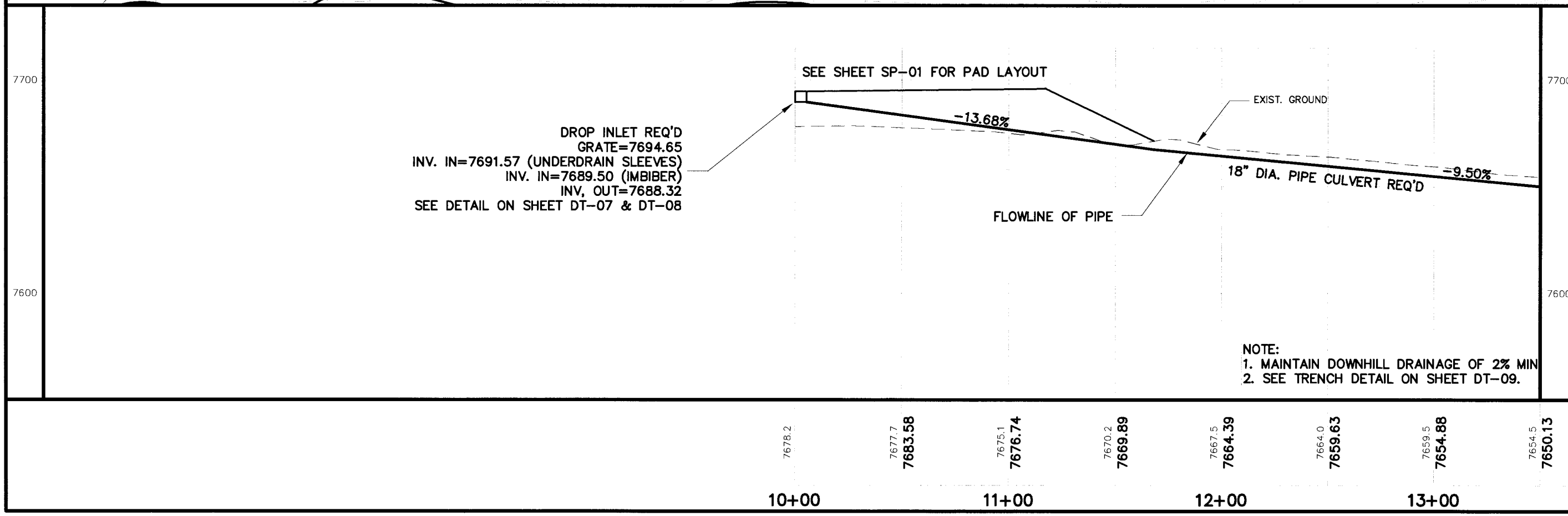


NOTE:
1. MAINTAIN DOWNHILL DRAINAGE OF 2% MIN
2. SEE TRENCH DETAIL ON SHEET DT-09.

| NO. | DATE | DESIGN BY: | WORK CORR. BY: | PARCELS REVISED BY: | REQUEST BY: | REMARKS |
|---|---|---|---|---|---|---|
| | | | | | | ORIGINAL SUBMISSION FOR AUTHORIZATION |

REVISIONS

SCALE: 1" = 50'

DWG NAME: PP-01
SHT SET: ####

DWG CREATED: 05/01/2006
PEN TBL: 18inch-h2500.ctb

LAST UPDATE: 7/25/2006

Jones & DeMille Engineering
1535 South 100 West · Richfield, Utah 84701
Phone (435) 896-8266 Fax (435) 896-8268
www.jonesanddemille.com

| | | | |
|---|---|---|---|
| DESIGN: J.L.A. 05-06 | CHECK: B.R.B. 05-06 | REVIEW | |
| DRAWN: J.L.A. 05-06 | CHECK: B.R.B. 05-06 | DATE: | |
| QUANT: J.L.A. 05-06 | CHECK: B.R.B. 05-06 | BY: | |

APPROVAL RECOMM: DATE PROJECT DESIGN ENGINEER
APPROVED: DATE

ENERGY WEST

RILDA CANYON FACILITIES

PHASE I - PIPELINE PLAN SHEET

PROJECT NUMBER: 0603-008

EMERY COUNTY

SHEET NO. PP-01

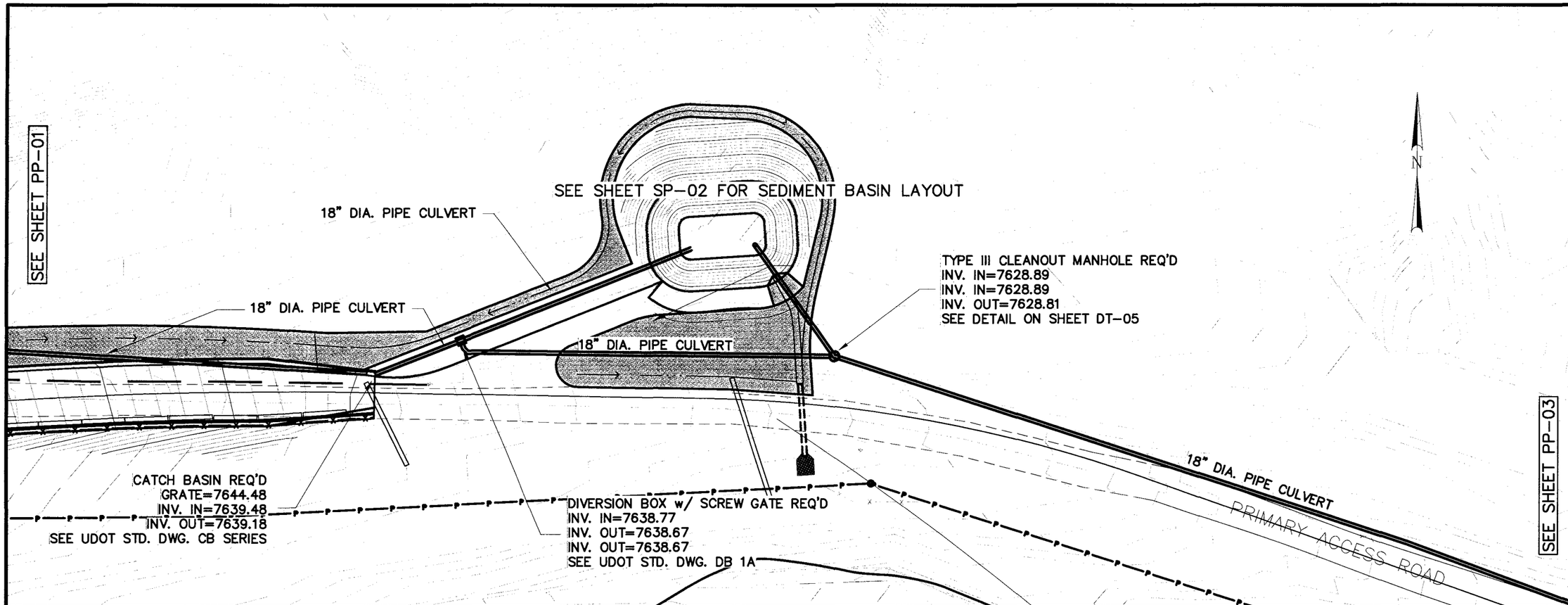


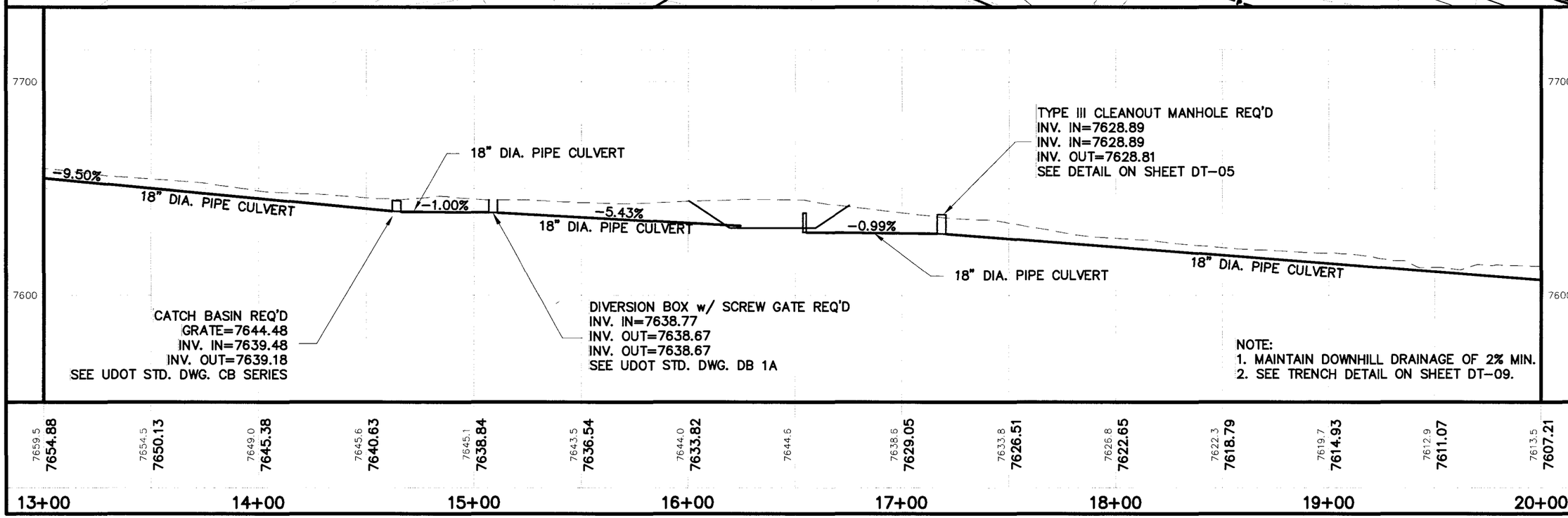


| NO. | DATE | DESIGN REV. BY | MAPS CORR. BY | PARCELS AFFECTED | REQUEST BY | REMARKS |
|---|---|---|---|---|---|---|
| | | | | | | ORIGINAL SUBMISSION FOR AUTHORIZATION |

REVISIONS

SCALE: 1" = 50'

DWG NAME: PP-02
SHT SET: ####

DWG CREATED: 05/01/2006
PEN TBL: jamdot.tbl2000.ctb

LAST UPDATE: 7/25/2006

Jones & DeMille Engineering
1535 South 100 West · Richfield, Utah 84701
Phone (435) 896-8266 · Fax (435) 896-8268
www.jonesanddemille.com

| | | | |
|---|---|---|---|
| DESIGN: J.L.A. 05-06 | CHECK: B.R.B. 05-06 | REVIEW | |
| DRAWN: J.L.A. 05-06 | CHECK: B.R.B. 05-06 | DATE: | |
| QUANT: J.L.A. 05-06 | CHECK: B.R.B. 05-06 | BY: | |

APPROVAL RECOMM: _____ DATE _____ PROJECT DESIGN ENGINEER
APPROVED: _____ DATE

ENERGY WEST

RILDA CANYON FACILITIES

PHASE I - PIPELINE PLAN SHEET

PROJECT NUMBER: 0603-008

EMERY
COUNTY

SHEET NO. PP-02

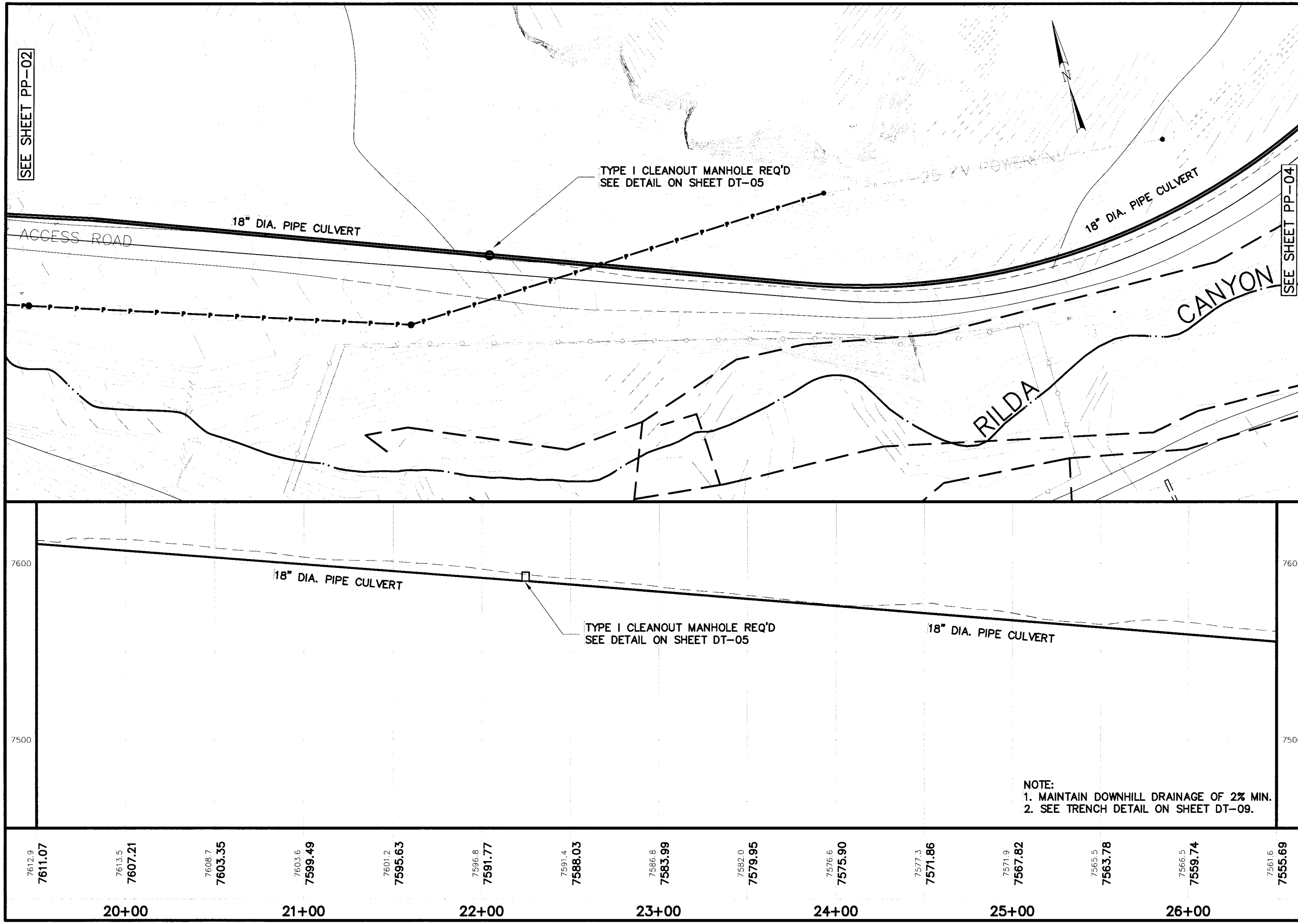


| NO. | DATE | DESIGN REVISION CORR. BY | MARK REVISIONS REQUEST REQ'D BY | REMARKS |
|---|---|---|---|---|
| | | ORIGINAL SUBMISSION FOR AUTHORIZATION | | |

REVISIONS

SCALE: 1" = 50'

DWG NAME: PP-03
SHT SET: ####

DWG CREATED: 05/01/2006
PEN TBL: rsmod-hp2600.ctb

LAST UPDATE: 7/25/2006

Jones & DeMille Engineering
1535 South 100 West - Richfield, Utah 84701
Phone (435) 896-8266 Fax (435) 896-8208
www.jonesanddemille.com

| | | | |
|---|---|---|---|
| DESIGN: J.L.A. 05-06 | CHECK: B.R.B. 05-06 | REVIEW | |
| DRAWN: J.L.A. 05-06 | CHECK: B.R.B. 05-06 | DATE: | |
| QUANT: J.L.A. 05-06 | CHECK: B.R.B. 05-06 | BY: | |

APPROVAL RECOMM: DATE PROJECT DESIGN ENGINEER
APPROVED: DATE

ENERGY WEST

RILDA CANYON FACILITIES

PHASE I - PIPELINE PLAN SHEET

PROJECT NUMBER: 0603-008

EMERY COUNTY

SHEET NO. PP-03

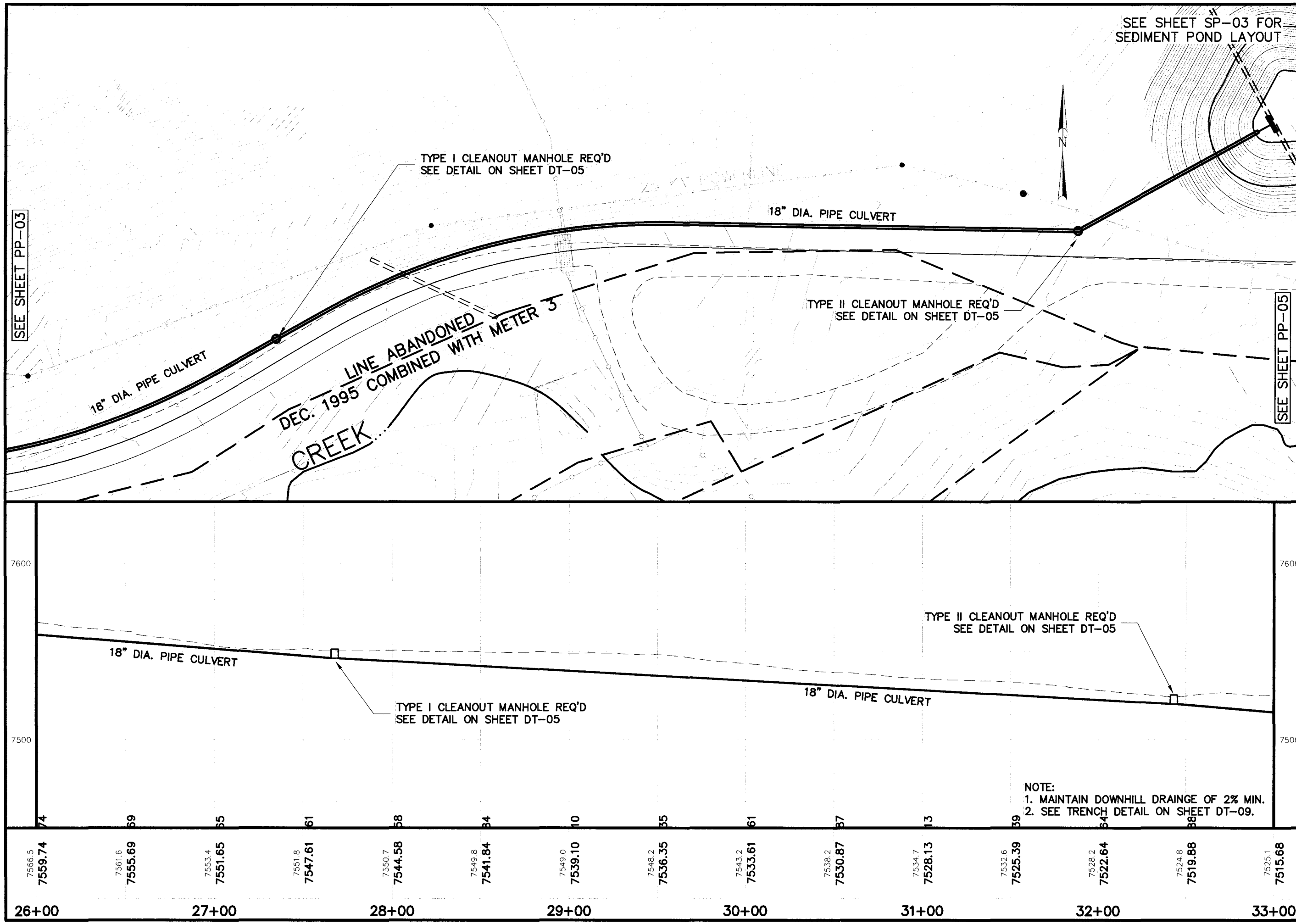


| NO. | DATE | DESIGN REV. BY | MADE CORR. BY | PARCEL AFFECTED | REQUEST BY | REMARKS |
|---|---|---|---|---|---|---|
| | | ORIGINAL SUBMISSION FOR AUTHORIZATION | | | | |

REVISIONS

SCALE: 1" = 50'

DWG NAME: PP-04
SHT SET: ####

DWG CREATED: 05/01/2006
PEN TBL: tstandard-p2800.ctb

LAST UPDATE: 7/25/2006

Jones & DeMille Engineering
1535 South 100 West - Richfield, Utah 84701
Phone (435) 896-8266 Fax (435) 896-8268
www.jonesandDemille.com

| | | | |
|---|---|---|---|
| DESIGN: J.L.A. 05-06 | CHECK: B.R.B. 05-06 | REVIEW | |
| DRAWN: J.L.A. 05-06 | CHECK: B.R.B. 05-06 | DATE: | |
| QUANT: J.L.A. 05-06 | CHECK: B.R.B. 05-06 | BY: | |

APPROVAL RECOMM: DATE PROJECT DESIGN ENGINEER

APPROVED: DATE

ENERGY WEST

RILDA CANYON FACILITIES

PHASE I - PIPELINE PLAN SHEET

PROJECT NUMBER: 0603-008

EMERY COUNTY

SHEET NO. PP-04

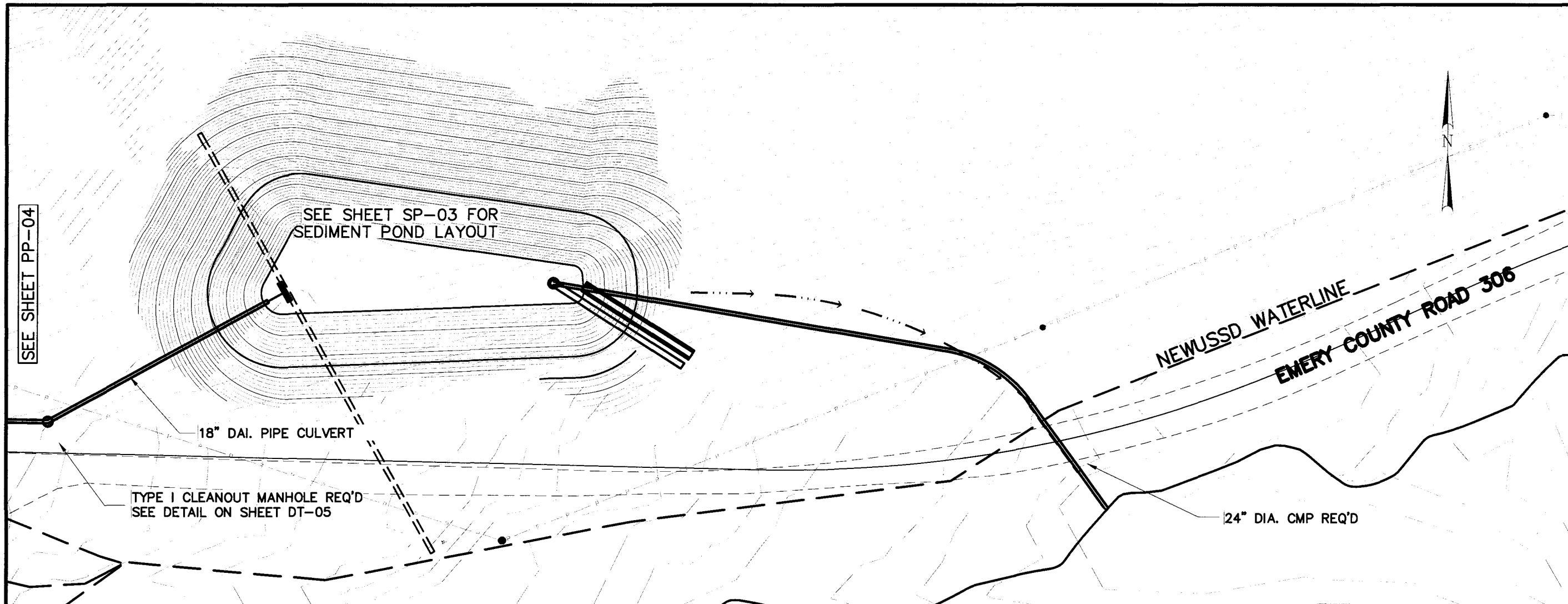


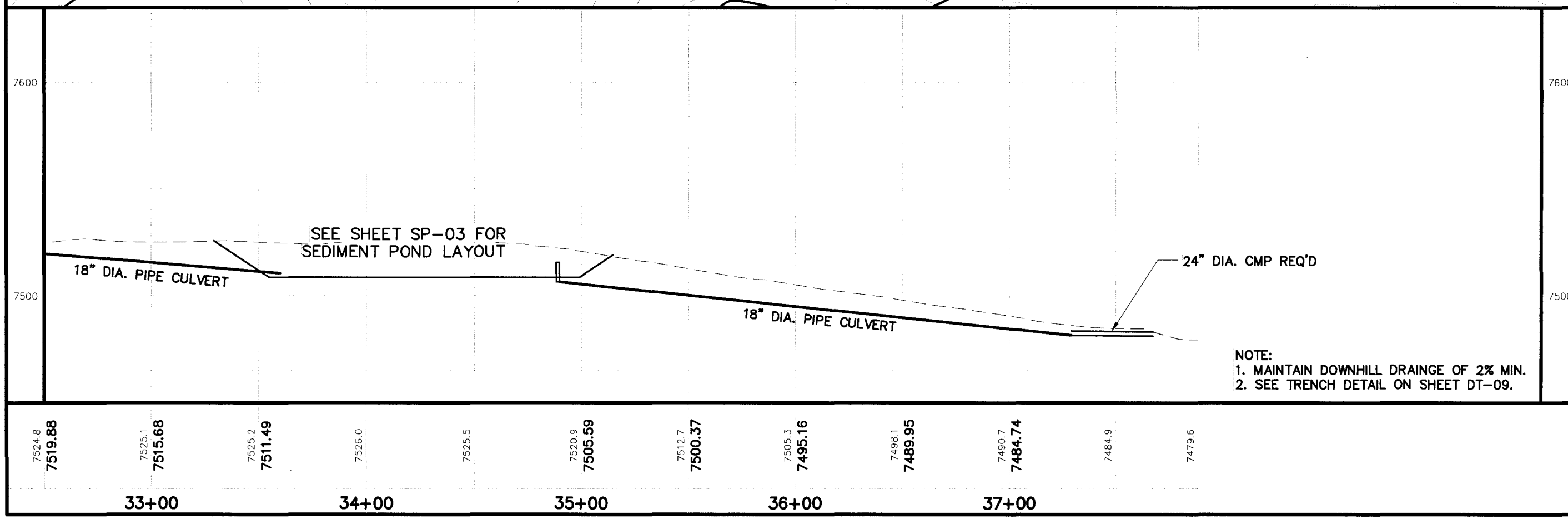


NOTE:
1. MAINTAIN DOWNHILL DRAINGE OF 2% MIN.
2. SEE TRENCH DETAIL ON SHEET DT-09.

| NO. | DATE | DESIGN: J.L.A. 05-06 | CHECK: B.R.B. 05-06 | REVIEW |
|---|---|---|---|---|
| | | DRAWN: J.L.A. 05-06 | CHECK: B.R.B. 05-06 | DATE: - |
| | | QUANT: J.L.A. 05-06 | CHECK: B.R.B. 05-06 | BY: - |

REVISIONS

| NO. | DATE | DESIGN: J.L.A. | CHECK: B.R.B. | REVIEW | REMARKS |
|---|---|---|---|---|---|
| | | DRAWN: J.L.A. | CHECK: B.R.B. | DATE: - | |
| | | QUANT: J.L.A. | CHECK: B.R.B. | BY: - | |
| | | ORIGINAL SUBMISSION FOR AUTHORIZATION | | | |

SCALE: 1" = 50'

DWG NAME: PP-05
SHT SET: ####

DWG CREATED: 05/01/2006
PEN TBL: 1ttm0/04-p2600.ctb

LAST UPDATE: 7/25/2006

Jones & DeMille Engineering
1535 South 100 West - Richfield, Utah 84701
Phone (435) 896-8266 Fax (435) 896-8268
www.jonesanddemille.com

APPROVAL RECOMM: _____ DATE
PROJECT DESIGN ENGINEER
APPROVED: _____ DATE

ENERGY WEST
RILDA CANYON FACILITIES
PHASE I - PIPELINE PLAN SHEET

PROJECT NUMBER: 0603-008

EMERY
COUNTY

SHEET NO. PP-05

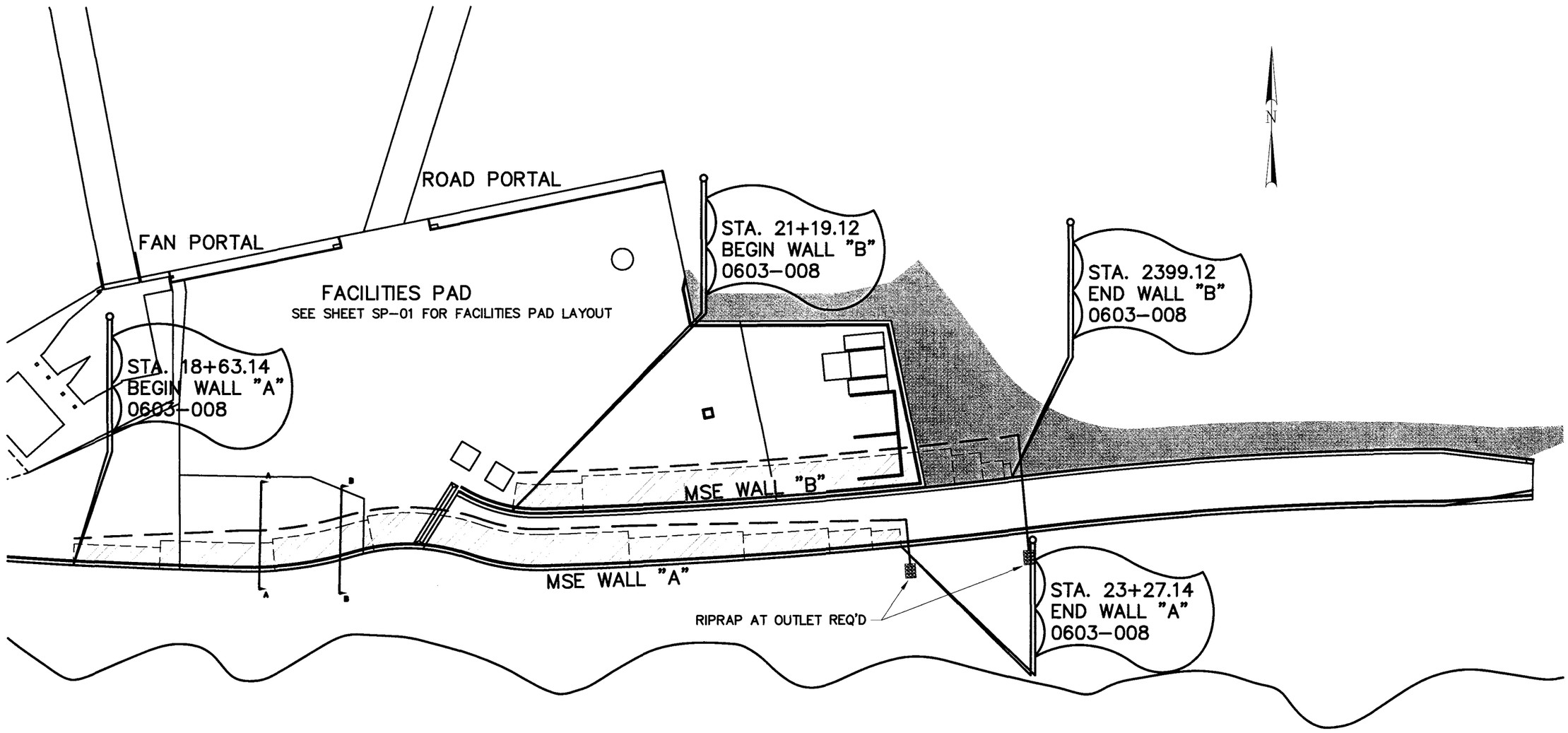


TOTAL WALL FACE = 15,800 S.F.

## LEGEND

---------- 4 INCH DIA., PERFORATED CORRUGATED HDPE PIPE

———————— 4 INCH DIA., SOLID CORRUGATED HDPE COLLECTOR PIPE

| NO. | DATE | DESIGN REV BY | MARK CORR BY | PARCEL INCREST AFFECTED | REC'D BY | REMARKS |
|---|---|---|---|---|---|---|
| | | ORIGINAL SUBMISSION FOR AUTHORIZATION | | | | |

REVISIONS

SCALE: 1" = 80'

DWG NAME: PP-01_WALL
SHT SET: ####

DWG CREATED: 05/01/2006
PEN TBL: latrobe24-hp2600.ctb

LAST UPDATE: 7/25/2006

Jones & DeMille Engineering
1535 South 100 West - Richfield, Utah 84701
Phone (435) 896-8266 Fax (435) 896-8268
www.jonesanddemille.com

| | | | |
|---|---|---|---|
| DESIGN: J.L.A. 05-06 | CHECK: B.R.B. 05-06 | REVIEW | |
| DRAWN: J.L.A. 05-06 | CHECK: B.R.B. 05-06 | DATE: | |
| QUANT: J.L.A. 05-06 | CHECK: B.R.B. 05-06 | BY: | |

APPROVAL RECOMM: _____ DATE _____ PROJECT DESIGN ENGINEER

APPROVED: _____ DATE

ENERGY WEST

RILDA CANYON FACILITIES

PHASE I - MSE WALL PLAN SHEET

PROJECT NUMBER: 06-03-008

EMERY COUNTY

SHEET NO. MW-01

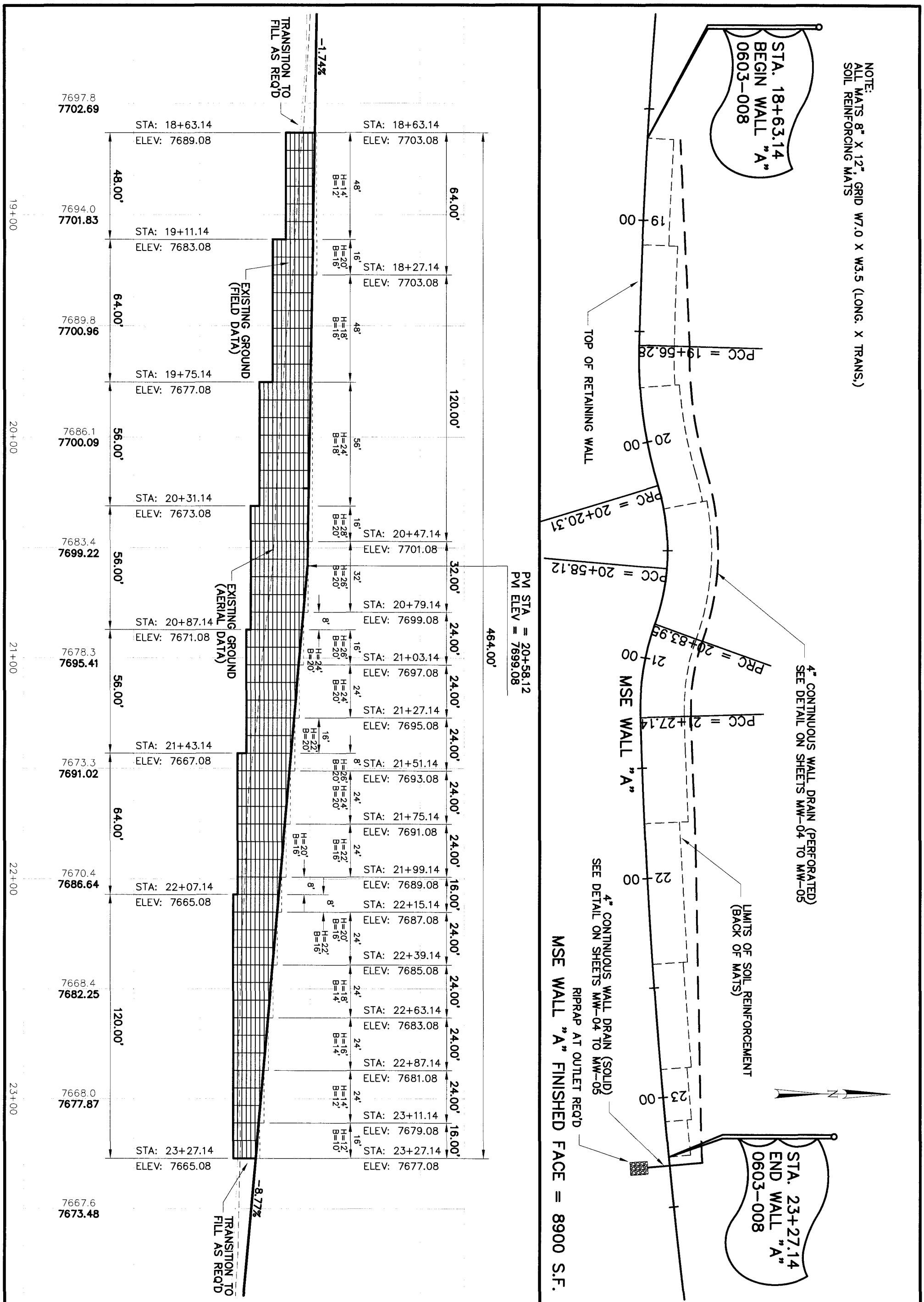


| | | | | | |
|---|---|---|---|---|---|
| ENERGY WEST | Jones & DeMille Engineering<br>1535 South 100 West · Richfield, Utah 84701<br>Phone (435) 896-8266 Fax (435) 896-8268<br>www.jonesanddemille.com | | | | |
| RILDA CANYON FACILITIES | APPROVAL RECOMM: DATE PROJECT DESIGN ENGINEER | DESIGN: J.L.A. 05-06 | CHECK: B.R.B. 05-06 | REVIEW | |
| PHASE I - MSE WALL SHEET | APPROVED: DATE | DRAWN: J.L.A. 05-06 | CHECK: B.R.B. 05-06 | DATE: · | |
| PROJECT NUMBER: 06-03-008 | | QUANT: J.L.A. 05-06 | CHECK: B.R.B. 05-06 | BY: · | |

| NO. | DATE | DESIGN REV. BY | MAPS CORR. BY | PARCELS AFFECTED | REQUEST BY | REMARKS |
|---|---|---|---|---|---|---|
| | | ORIGINAL SUBMISSION FOR AUTHORIZATION | | | | |
| | | REVISIONS | | | | |

| | | | |
|---|---|---|---|
| SCALE: 1" = 40' | DWG NAME: PP-01_WALL<br>SHT SET: #### | DWG CREATED: 05/01/2006<br>PEN TBL: _1stndrd-hp2600.ctb | LAST UPDATE: 7/25/2006 |

EMERY COUNTY

SHEET NO. MW-02

NOTE:
ALL MATS 8" X 12", GRID W7.0 X W3.5 (LONG. X TRANS,)
SOIL REINFORCING MATS

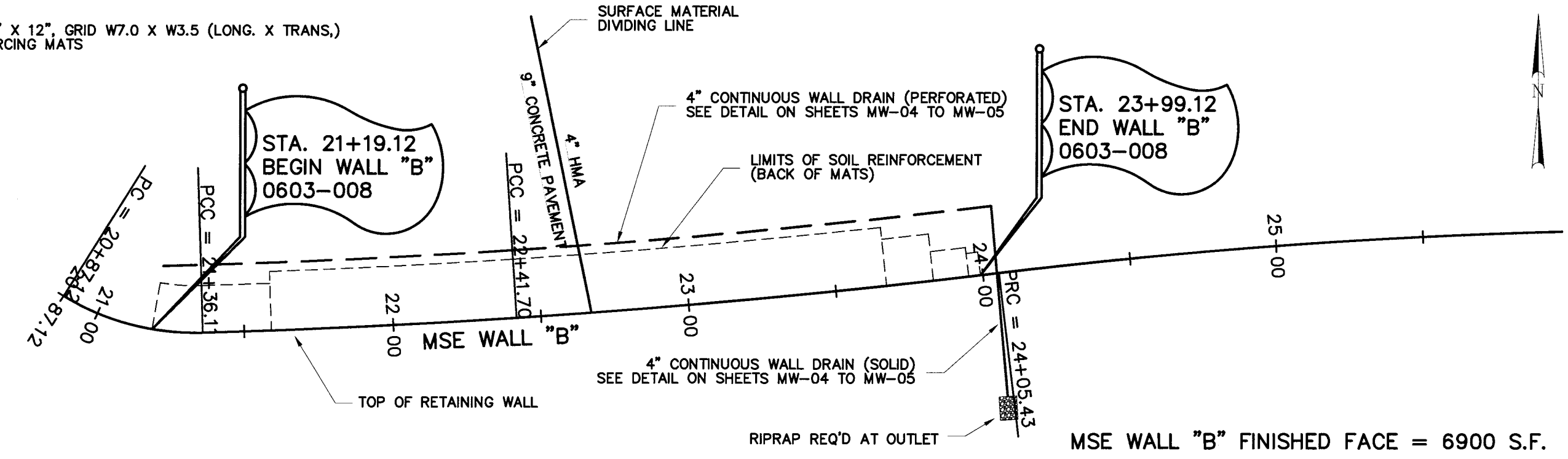


MSE WALL "B" FINISHED FACE = 6900 S.F.

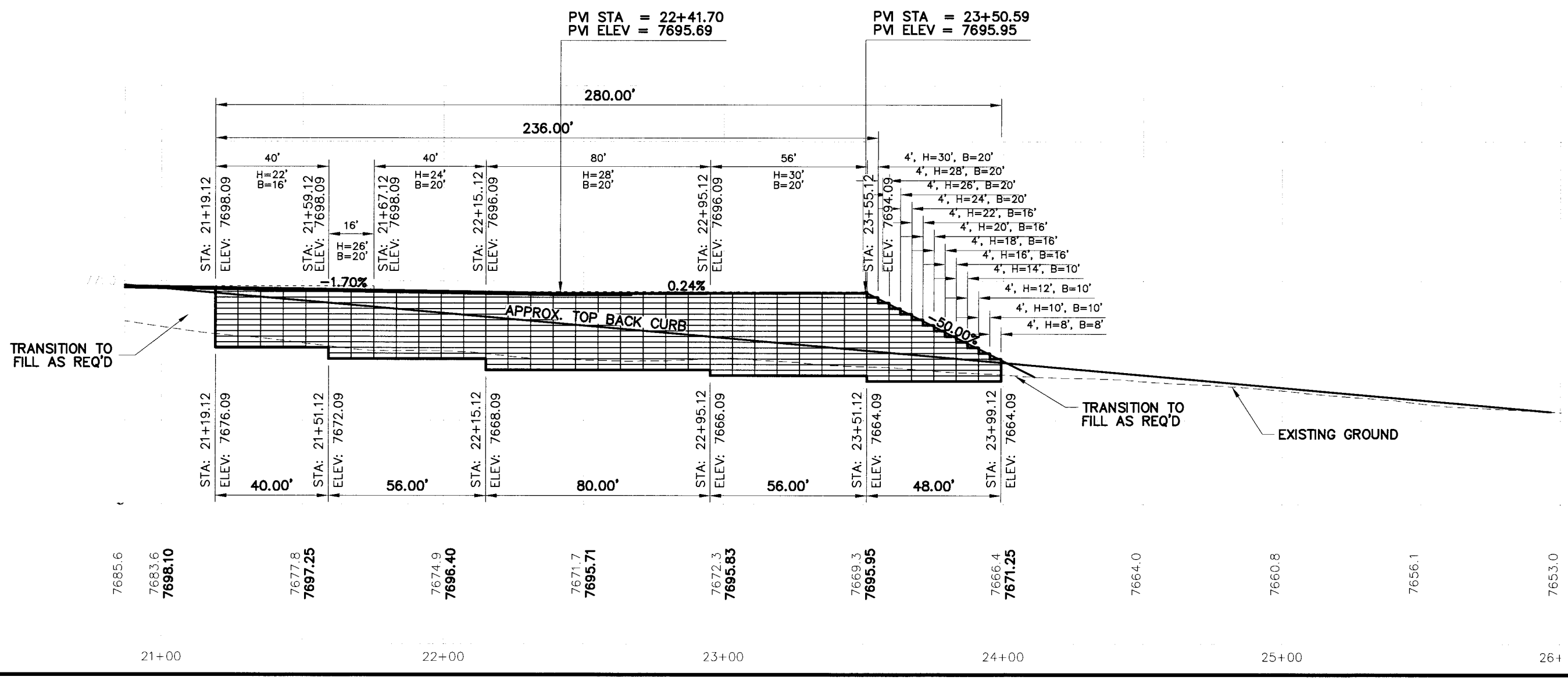


| NO. | DATE | DESIGN MODIFICATIONS REV. BY | PARCELS AFFECTED | RECORDED BY | REMARKS |
|---|---|---|---|---|---|
| | | ORIGINAL SUBMISSION FOR AUTHORIZATION | | | |

REVISIONS

SCALE: 1" = 40'

DWG NAME: PP-01_WALL
SHT SET: ####

DWG CREATED: 05/01/2006
PEN TBL: tpmdot-p2600.ctb

LAST UPDATE: 7/25/2006


Jones & DeMille Engineering
1535 South 100 West - Richfield, Utah 84701
Phone (435) 896-8266 Fax (435) 896-1838
www.jonesdemille.com


| | | | |
|---|---|---|---|
| DESIGN: J.L.A. 05-06 | CHECK: B.R.B. 05-06 | REVIEW | |
| DRAWN: J.L.A. 05-06 | CHECK: B.R.B. 05-06 | DATE: | |
| QUANT: J.L.A. 05-06 | CHECK: B.R.B. 05-06 | BY: | |

APPROVAL RECOMM: DATE
PROJECT DESIGN ENGINEER
APPROVED: DATE

ENERGY WEST
RILDA CANYON FACILITIES
PHASE I - MSE WALL SHEET

PROJECT NUMBER: 06-03-008

EMERY COUNTY

SHEET NO. MW-03

# DETAIL SHEET

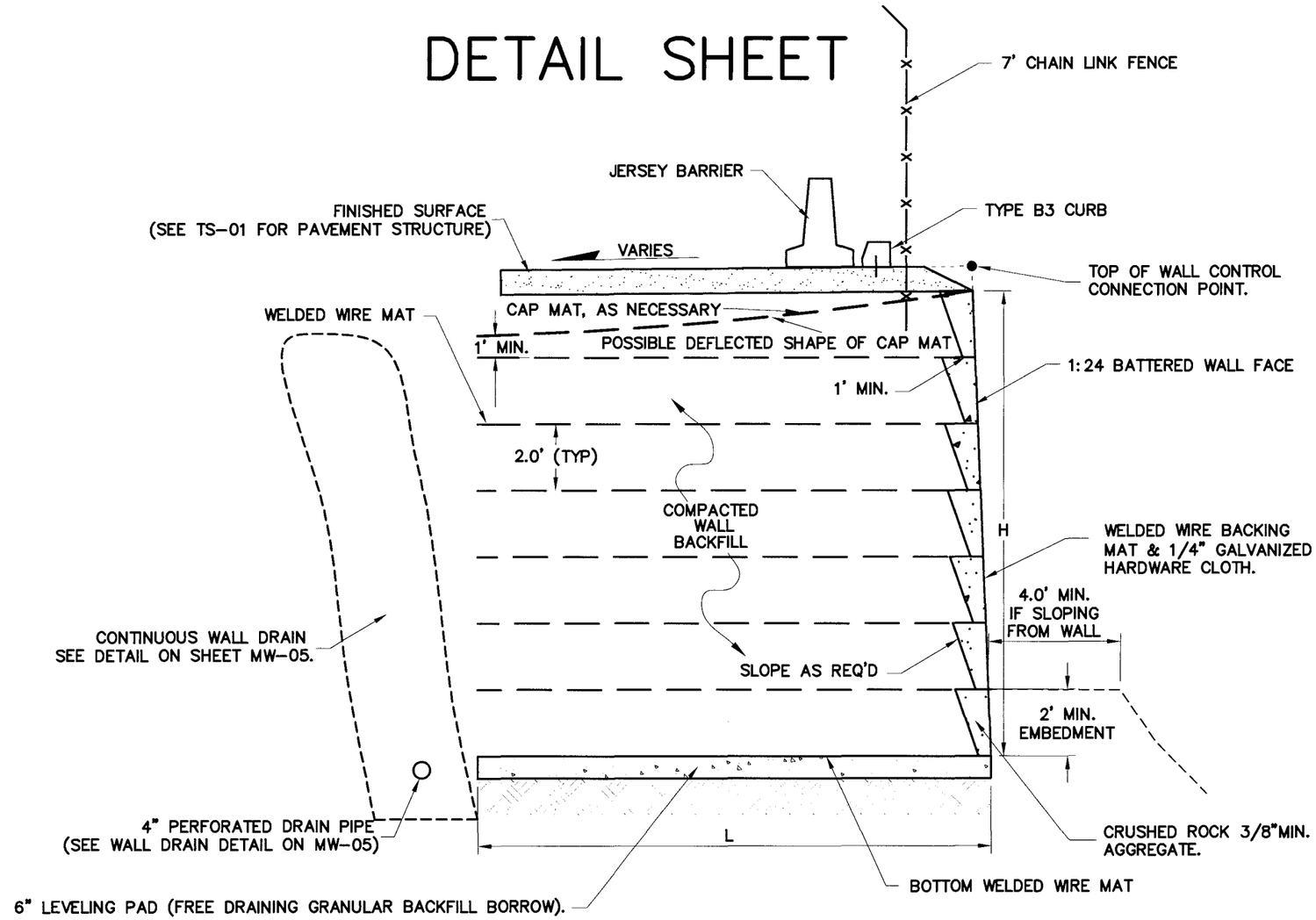


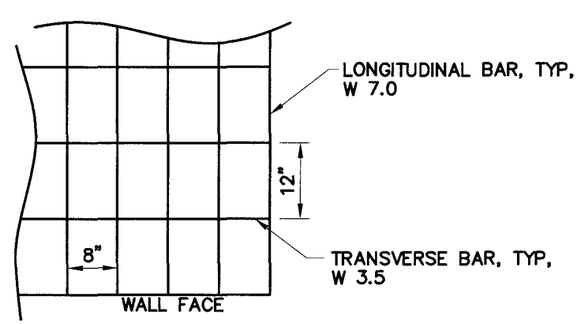


**PLAN**
WELDED WIRE MAT

## MSE WALL TYPICAL SECTION

NOTES:

1. SUBGRADE MATERIAL UNDER BOTTOM WELDED WIRE MAT TO BE COMPACTED TO 96% COMPACTION (AASHTO T180).
2. COMPACTED WALL BACKFILL = GRANULAR BORROW
3. CRUSHED ROCK AT WALL FACE TO BE COMPACTED BY RODDING TO REFUSAL.

| NO. | DATE | DESIGN REV. BY | MADE CORR. BY | PROJECT AFFECTED | REQUEST BY | REMARKS |
|---|---|---|---|---|---|---|
| | | | | | | ORIGINAL SUBMISSION FOR AUTHORIZATION |

REVISIONS

SCALE: 1" = 80'
DWG NAME: MSE-DET
SHT SET: ####
DWG CREATED: 05/01/2006
PEN TBL: jsheet-hp2600.ctb
LAST UPDATE: 7/25/2006


Jones & DeMille Engineering
1535 South 100 West - Richfield, Utah 84701
Phone (435) 896-8266 Fax (435) 896-8268
www.jonesanddemille.com


| | | | |
|---|---|---|---|
| DESIGN: J.L.A. 05-06 | CHECK: B.R.B. 05-06 | REVIEW | |
| DRAWN: J.L.A. 05-06 | CHECK: B.R.B. 05-06 | DATE: | |
| QUANT: J.L.A. 05-06 | CHECK: B.R.B. 05-06 | BY: | |

APPROVAL RECOMM: DATE PROJECT DESIGN ENGINEER
APPROVED: DATE

ENERGY WEST
RILDA CANYON FACILITIES
PHASE I - MSE WALL SHEET
PROJECT NUMBER: 0603-008

EMERY COUNTY

SHEET NO. MW-04

# DETAIL SHEET

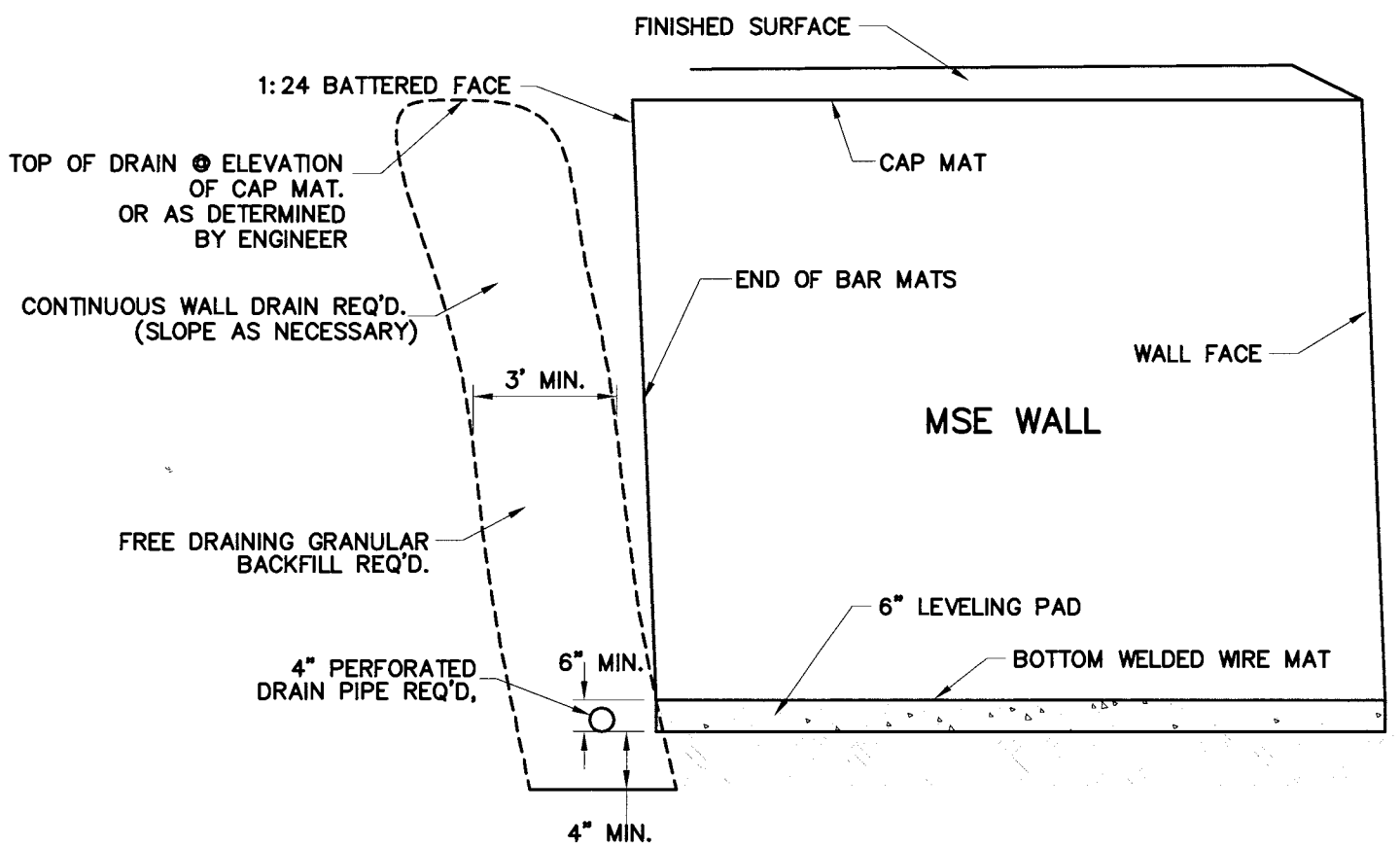


## CONTINUOUS WALL DRAIN SECTION

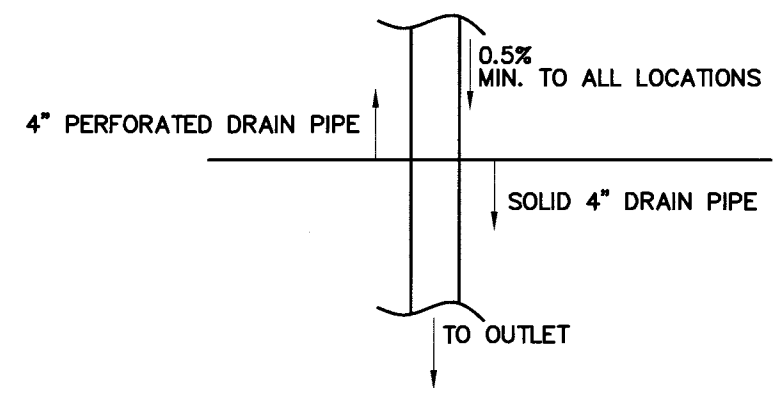


## MSE WALL DRAIN PLAN

| NO. | DATE | REMARKS |
|---|---|---|
| | DESIGN REV. BY: | MARK BY: PARCEL CORR. INFORM. BY: REQUEST BY: |
| | | ORIGINAL SUBMISSION FOR AUTHORIZATION |

REVISIONS

SCALE: 1" = 80'

DWG NAME: MSE-DET
SHT SET: ####

DWG CREATED: 05/01/2006
PEN TBL: 18ln24-to2000.ctb

LAST UPDATE: 7/25/2006

Jones & DeMille Engineering
1535 South 100 West - Richfield, Utah 84701
Phone (435) 896-8266 Fax (435) 896-8268
www.jonesanddemille.com

| | | | |
|---|---|---|---|
| DESIGN: J.L.A. 05-06 | CHECK: B.R.B. 05-06 | REVIEW | |
| DRAWN: J.L.A. 05-06 | CHECK: B.R.B. 05-06 | DATE: | |
| QUANT: J.L.A. 05-06 | CHECK: B.R.B. 05-06 | BY: | |

APPROVAL RECOMM: DATE PROJECT DESIGN ENGINEER
APPROVED: DATE

ENERGY WEST

RILDA CANYON FACILITIES

PHASE I - MSE WALL SHEET

PROJECT NUMBER: 0603-008

EMERY
COUNTY

SHEET NO. MW-05

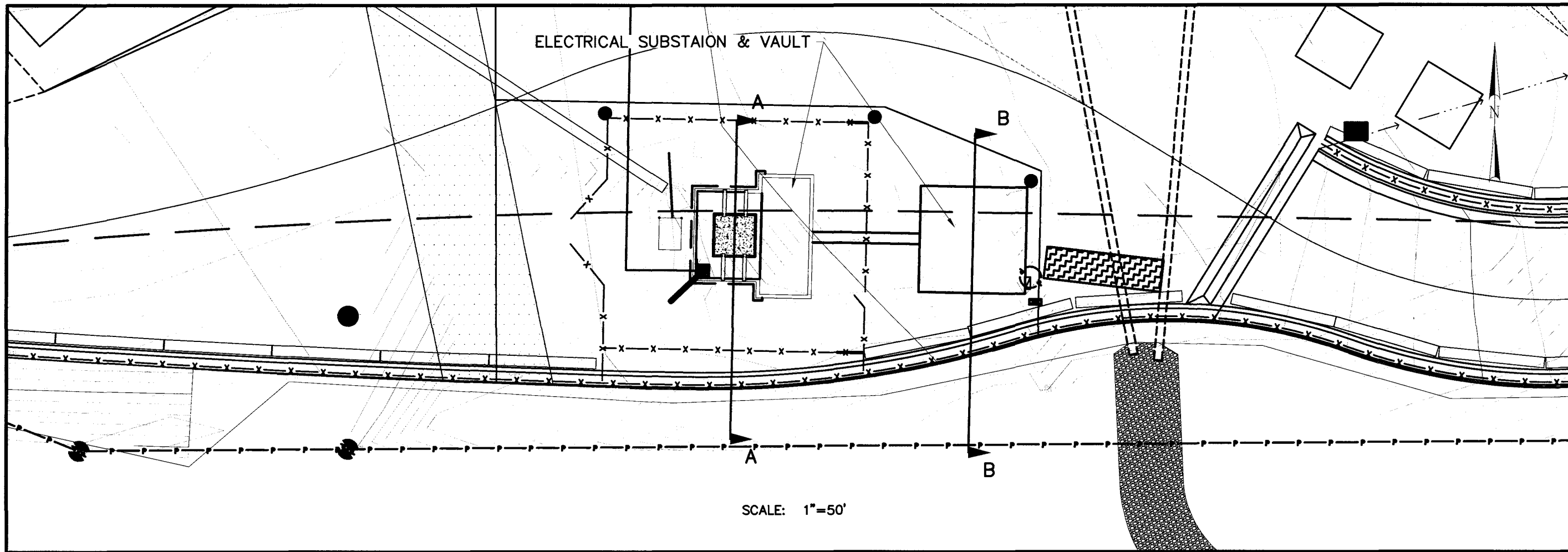


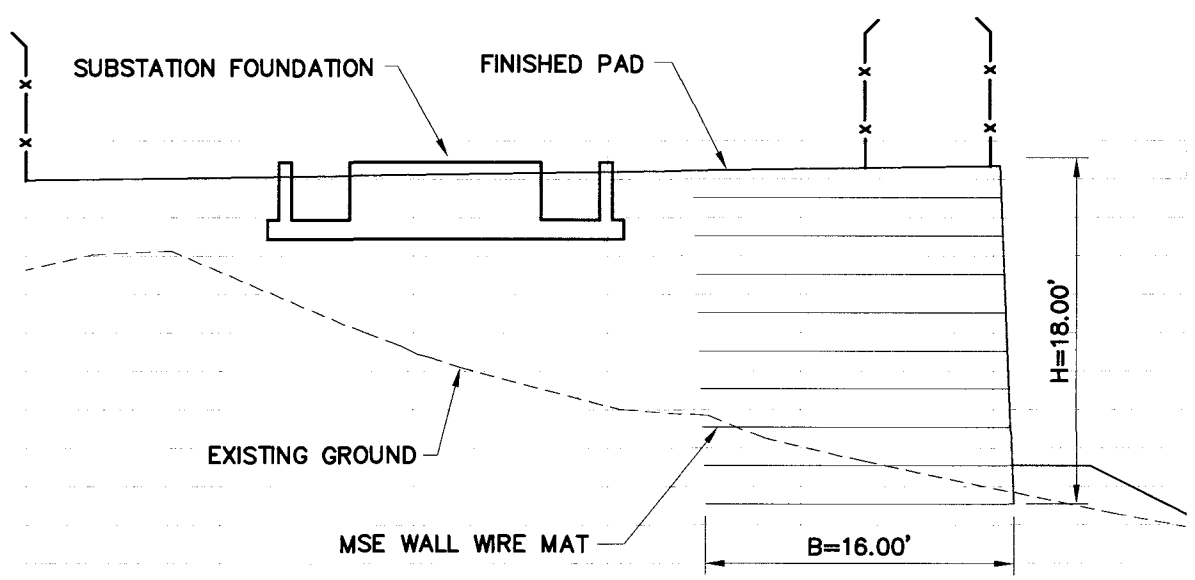


## SECTION A–A

SCALE: 1"=10'

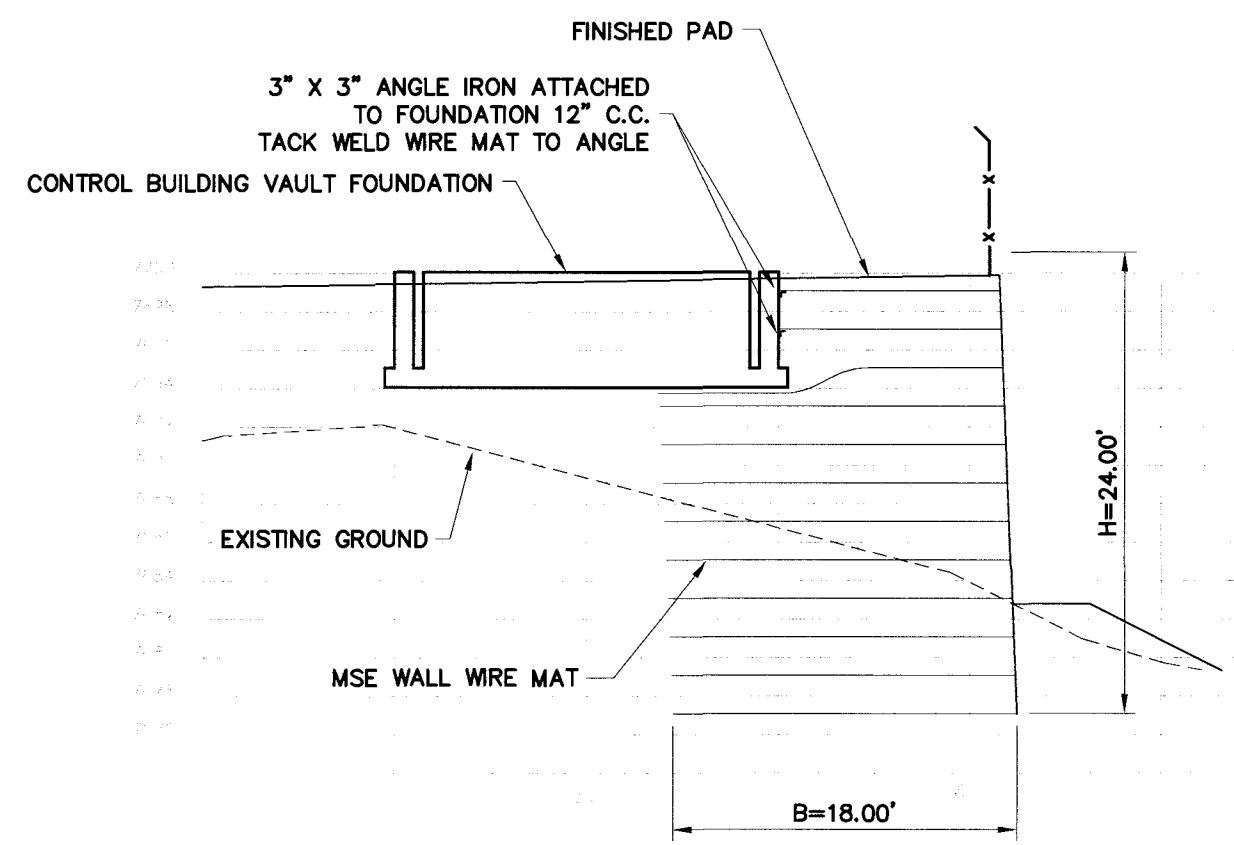


## SECTION B–B

SCALE: 1"=10'

| NO. | DATE | REMARKS |
|---|---|---|
| | DESIGN REVIEW BY | MARK PORTIONS CORR. BY INFECTED REQUEST BY |
| | | ORIGINAL SUBMISSION FOR AUTHORIZATION |

REVISIONS

SCALE: VARIES

DWG NAME: _DESIGN
SHT SET: ####

DWG CREATED: 05/01/2006
PEN TBL: tandcirq-2006.ctb

LAST UPDATE: 7/25/2006


Jones & DeMille Engineering
1535 South 100 West - Richfield, Utah 84701
Phone (435) 896-8266 Fax (435) 896-8268
www.jonesanddemille.com


| | | | |
|---|---|---|---|
| DESIGN: J.L.A. 05-06 | CHECK: B.R.B. 05-06 | REVIEW | |
| DRAWN: J.L.A. 05-06 | CHECK: B.R.B. 05-06 | DATE: - | |
| QUANT: J.L.A. 05-06 | CHECK: B.R.B. 05-06 | BY: - | |

APPROVAL RECOMM: DATE PROJECT DESIGN ENGINEER
APPROVED: DATE

ENERGY WEST

RILDA CANYON FACILITIES

PHASE I - MSE WALL SHEET

PROJECT NUMBER: 06-03-008

EMERY
COUNTY

SHEET NO. MW-06

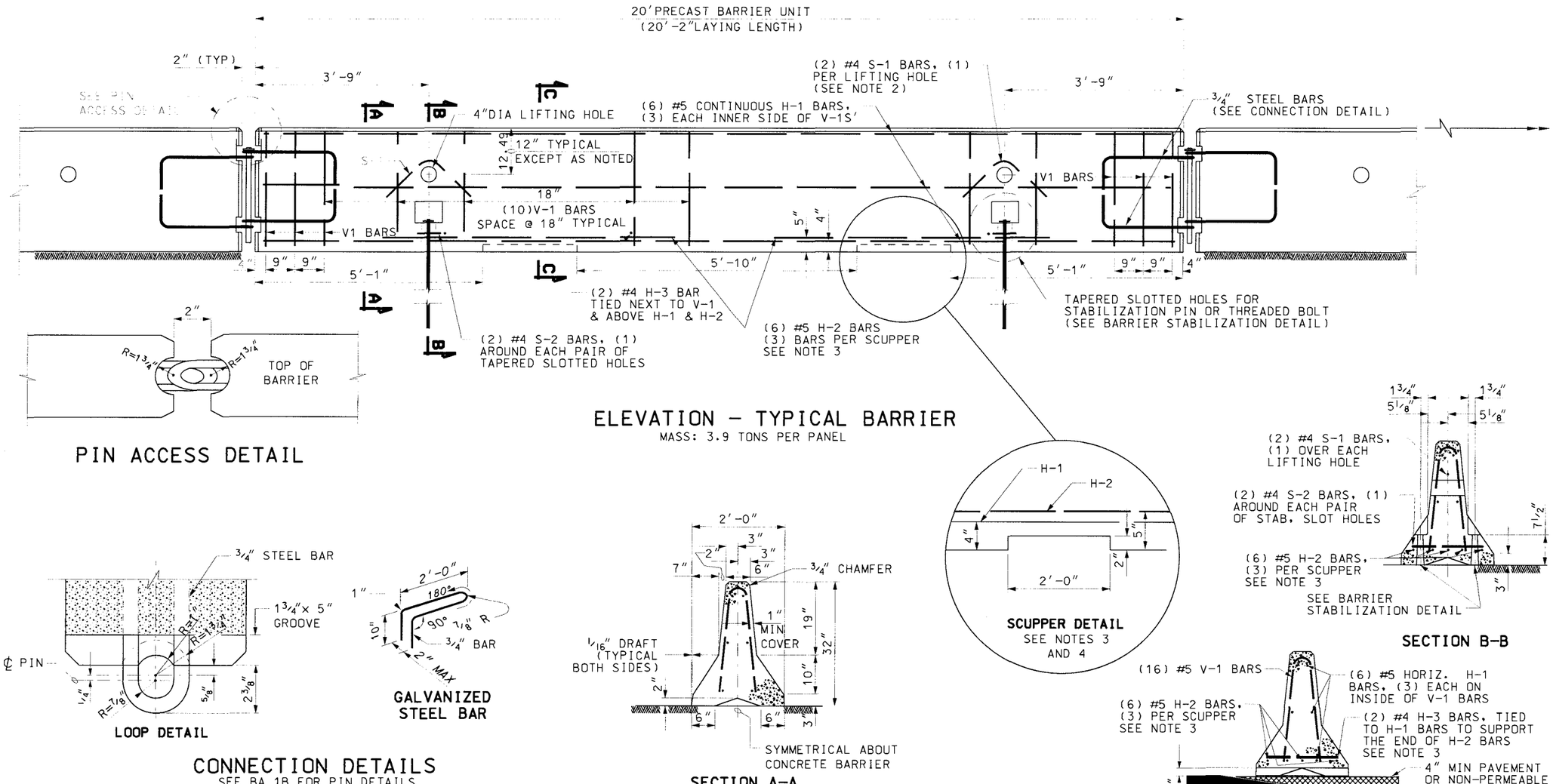


## ELEVATION – TYPICAL BARRIER

MASS: 3.9 TONS PER PANEL




## PIN ACCESS DETAIL




**SCUPPER DETAIL**
SEE NOTES 3 AND 4




**SECTION B-B**




**LOOP DETAIL**




**GALVANIZED STEEL BAR**

## CONNECTION DETAILS

SEE BA 1B FOR PIN DETAILS




**SECTION A-A**

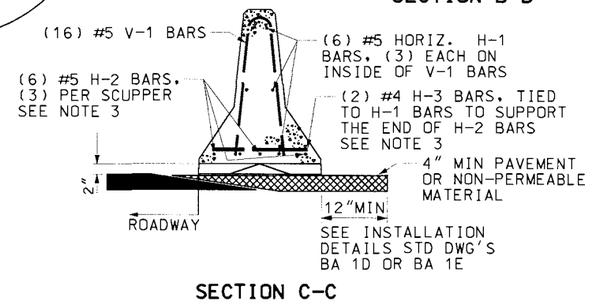


**SECTION C-C**

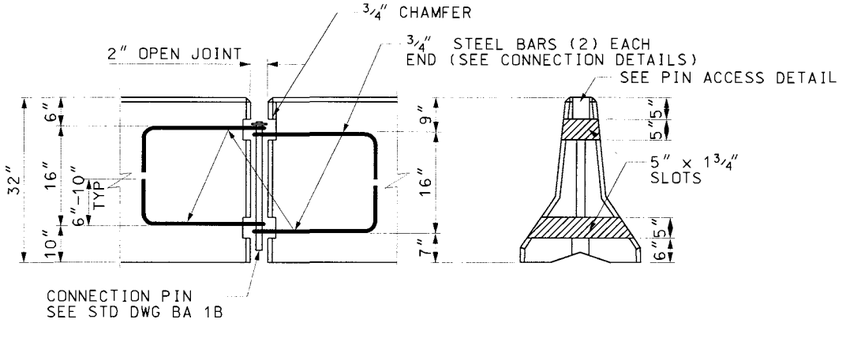


## LOOP LOCATION

## BARRIER SLOT DETAIL

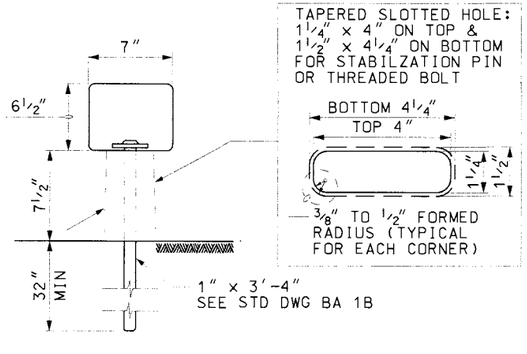


## BARRIER STABILIZATION DETAIL

**NOTES:**

1. SEE STD DWG BA 1B FOR ADDITIONAL REINFORCEMENT STEEL REQUIREMENTS.
2. USE A 4" WHITE PVC SLEEVE TO FORM THE LIFTING HOLES. LEAVE SLEEVE IN PLACE AFTER CASTING.
3. INDICATE ON PLAN SET WHEN BARRIER SECTIONS WITH SCUPPERS ARE REQUIRED.
4. PROVIDE BLOCK OUT AND REINFORCING STEEL FOR SCUPPERS WHEN NOTED ON PLANS.
5. PLACE AN ADEQUATE AMOUNT OF SILICONE ADHESIVE ON BOTTOM OF WASHER BEFORE INSERTING PIN TO HOLD IN PLACE AND PREVENT EASY HAND REMOVAL.

REVISIONS

| NO. | DATE | APPR. | REMARKS |
|---|---|---|---|
| 1 | 02/23/06 | B.A. | CORRECTED NOTE 1 DRAWING CALLOUT. |

UTAH DEPARTMENT OF TRANSPORTATION
STANDARD DRAWINGS FOR ROAD AND BRIDGE CONSTRUCTION
SALT LAKE CITY, UTAH

RECOMMENDED FOR APPROVAL — FEB.23.2006 DATE
CHAIRMAN STANDARDS COMMITTEE APPROVED — FEB.23.2006 DATE
DEPUTY DIRECTOR

PRECAST CONCRETE FULL BARRIER STANDARD SECTION

STANDARD DRAWING TITLE

STD DWG
BA 1A

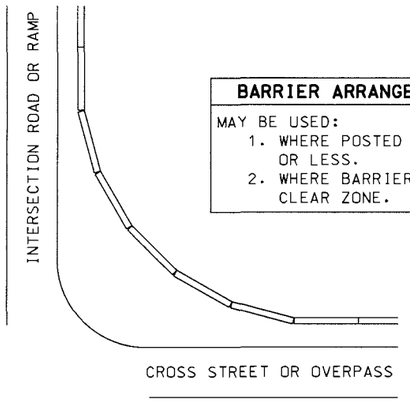


**BARRIER ARRANGED ON A CURVE**

MAY BE USED:
1. WHERE POSTED SPEED IS 35 MPH OR LESS.
2. WHERE BARRIER IS OUTSIDE THE CLEAR ZONE.

CURVED LAYOUT

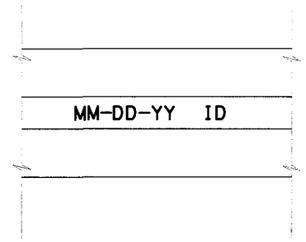


BARRIER MARKINGS

SEE NOTE 1

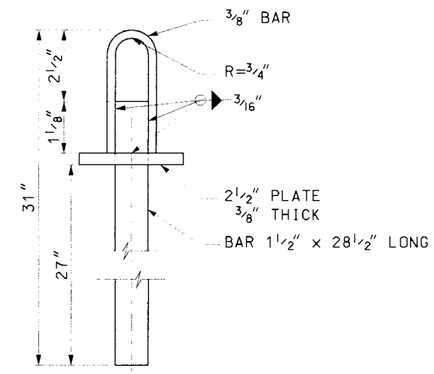


**GALVANIZED CONNECTING PIN**

OPTION 1

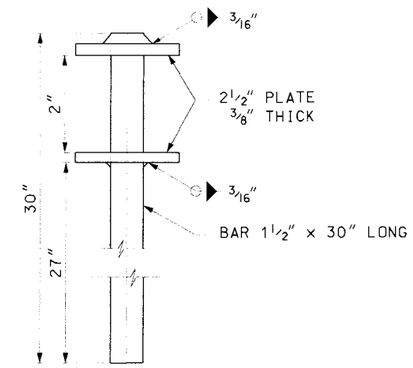


**GALVANIZED CONNECTING PIN**

OPTION 2

SEE NOTE 5

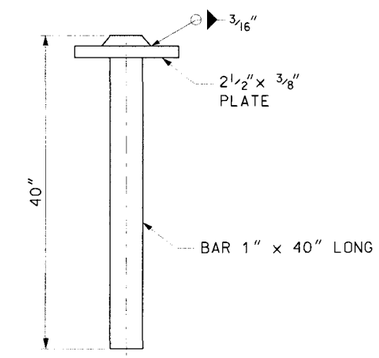


**STABILIZATION PIN**

SEE NOTE 5

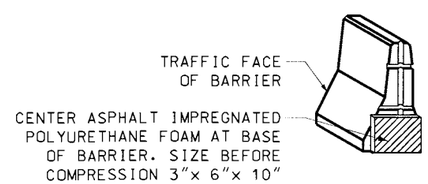


BARRIER SEAL

SEE NOTE 3

**METAL REINFORCEMENT TABLE**

| MARK | LOCATION | BAR SIZE | (NO. BARS) | SKETCH |
|---|---|---|---|---|
| H-1 | HORIZONTAL IN BARRIER TIED INSIDE V-1 BARS | #5 | (6) | 19'-3" |
| H-2 | CENTERED ABOVE SCUPPERS LONG. & TRANSVERSELY | #5 | (6) | 6'-6" |
| H-3 | TIED ABOVE H-1 BARS TO SUPPORT H-2. TIED TO V-1 | #4 | (2) | 1'-6" |
| S-1 | 2 BARS CENTERED OVER EACH LIFTING HOLE | #4 | (4) | 3 3/8"R, 2'-5", 90°, LIFTING HOLE |
| S-2 | HORIZ. AROUND SLOTS BETWEEN V-I SCUPPERS | #4 | (2) | (4)1 1/2"R, SLOTS, 7", 1"MIN CLEAR TO BAR, 1"MIN, 12" OVERLAO, 1'-6" |
| V-1 | VERTICAL IN BARRIER(3) EACH END & (2) AT EACH SCUPPER | #5 | (16) | TOTAL LENGTH 4'-9", 2 3/16"R, 4 3/8", 12°, 9 1/2", 2'-1 3/8" |

**NOTES:**

1. MARK EACH BARRIER WITH 1 1/2" NUMBERS INDICATING THE DATE OF CASTING AND IDENTIFICATION NUMBER SUPPLIED BY THE INSPECTOR. IMPRESSED 1/4" DEEP INTO THE TOP CENTER OF THE BARRIER.
2. USE COATED REINFORCING STEEL EXCEPT AS NOTED.
3. DO NOT USE BARRIER SEAL WHEN SCUPPERS ARE PRESENT ON BARRIER.
4. PLACE AN ADEQUATE AMOUNT OF SILICONE ADHESIVE ON BOTTOM OF WASHER BEFORE INSERTING PIN TO HOLD IN PLACE AND PREVENT EASY HAND REMOVAL.
5. USE OF A HOT FORGED HEAD. MEETING PLATE SIZE AND THICKNESS IS ACCEPTABLE IN PLACE OF A WELDED PLATE.

REVISIONS

| NO. | DATE | APPR. | REMARKS |
|---|---|---|---|
| 1 | 08/25/05 | G.S. | ADDED NOTE 5. CORRECTED CONNECTION PIN OPTION 1 DIMENSIONS. CHANGED WELDING INFORMATION ON PIN DETAIL. |

UTAH DEPARTMENT OF TRANSPORTATION
STANDARD DRAWINGS FOR ROAD AND BRIDGE CONSTRUCTION
SALT LAKE CITY, UTAH

RECOMMENDED FOR APPROVAL — AUG.25,2005 DATE
CHAIRMAN STANDARDS & CONTROL COMMITTEE APPROVED — AUG.25,2005 DATE
DEPUTY DIRECTOR

PRECAST CONCRETE FULL BARRIER STANDARD SECTION

STANDARD DRAWING TITLE

STD DWG
BA 1B

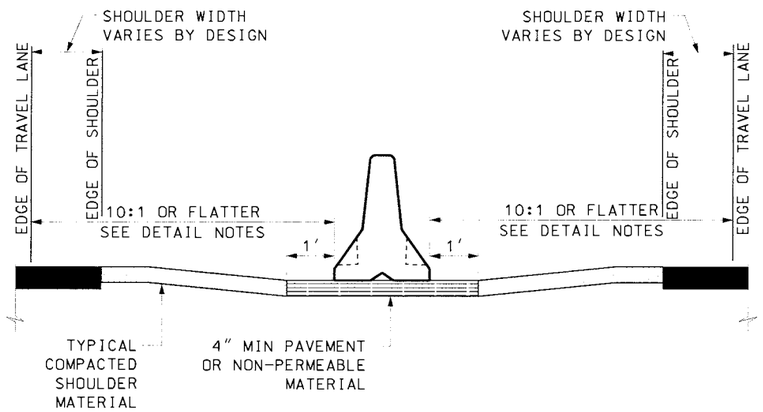


## MEDIAN INSTALLATION

USE THIS DETAIL WHEN MEDIAN BARRIER IS WARRANTED

1. NO STABILIZATION PINS ARE REQUIRED WHEN BARRIER FACE IS GREATER THAN 12 FEET FROM TRAVEL LANE.
2. INSTALL STABILIZATION PINS WHEN BARRIER FACE IS 12 FEET OR LESS FROM TRAVEL LANE.

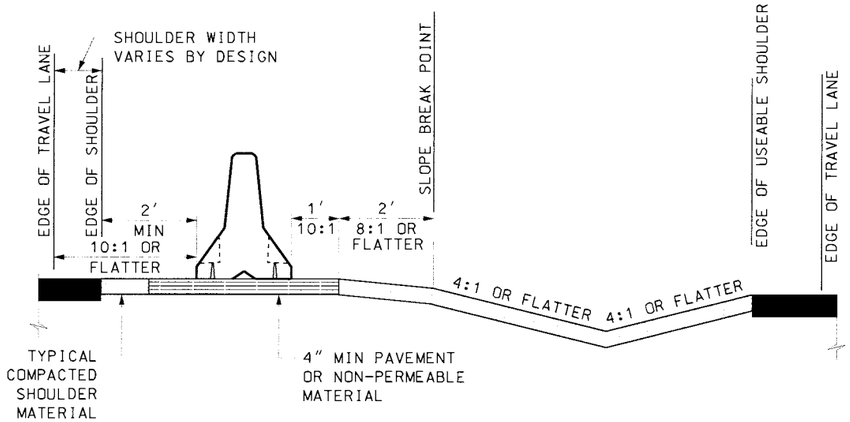


## MEDIAN INSTALLATION W/ OFFSET ROADWAY

USE THIS DETAIL WHEN MEDIAN BARRIER IS WARRANTED

1. IF THE 10:1/8:1 SLOPE 3 FEET BEHIND THE BARRIERS CANNOT BE MAINTAINED STABILIZATION PINS ARE REQUIRED.

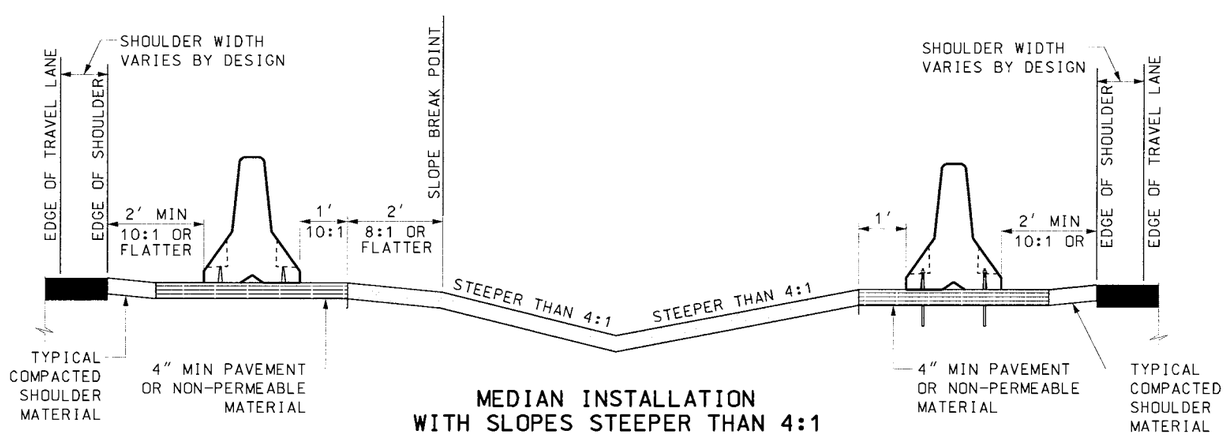


## MEDIAN INSTALLATION WITH SLOPES STEEPER THAN 4:1

USE THIS DETAIL WHEN MEDIAN BARRIER IS WARRANTED

1. IF THE 10:1/8:1 SLOPE 3 FEET BEHIND THE BARRIERS CANNOT BE MAINTAINED STABILIZATION PINS ARE REQUIRED.

### NOTES:

1. USE APPROPRIATE FLARE RATE AS SUGGESTED IN THE ROADSIDE DESIGN GUIDE, CURRENT EDITION, FOR RIGID BARRIER SYSTEMS, WHEN BARRIER IS PLACED WITH A FLARE.
2. PLACE BARRIER ON A 4" PAVED OR NON PERMEABLE SURFACE.
3. DO NOT PLACE BARRIER ON TOP OF ANY CURBING.
4. PIN ALL BARRIER SECTIONS TOGETHER AT CONNECTION LOOPS.
5. PRE-DRILL A 1" THROUGH THE PAVED SURFACE PRIOR TO INSTALLING THE STABILIZATION PIN.
6. PLACE AN ADEQUATE AMOUNT OF SILICON ADHESIVE ON THE BOTTOM WASHER OF THE CONNECTION PIN BEFORE INSERTING, TO HOLD IN PLACE AND PREVENT EASY HAND REMOVAL.

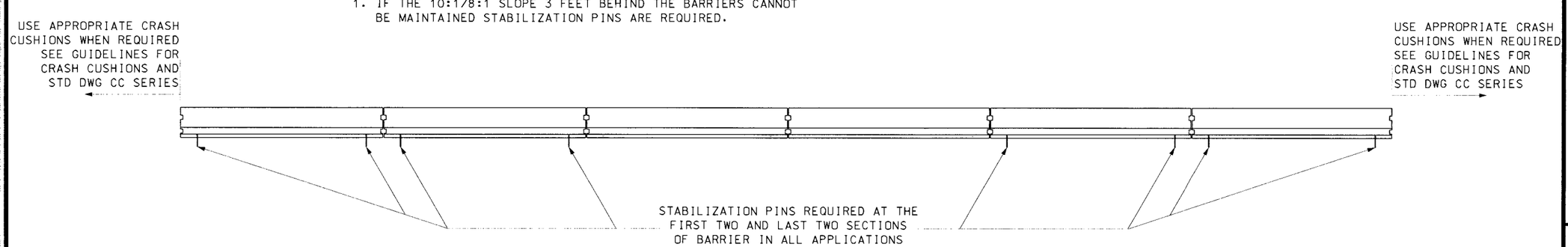


| NO. | DATE | APPR. | REMARKS |
|---|---|---|---|
| | | | |

REVISIONS

UTAH DEPARTMENT OF TRANSPORTATION
STANDARD DRAWINGS FOR ROAD AND BRIDGE CONSTRUCTION
SALT LAKE CITY, UTAH

RECOMMENDED FOR APPROVAL — JAN.01.2005 DATE

CHAIRMAN STANDARDS COMMITTEE APPROVED — JAN.01.2005 DATE

DEPUTY DIRECTOR

PRECAST CONCRETE
FULL SECTION
MEDIAN
INSTALLATION

STANDARD DRAWING TITLE

STD DWG
BA 1D

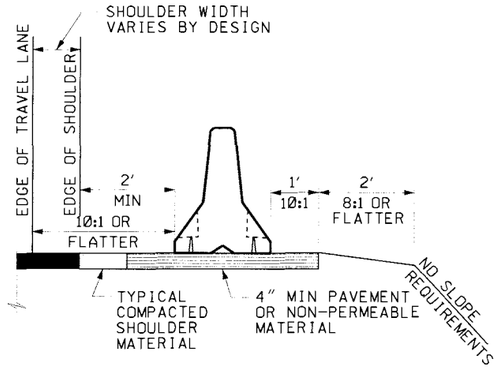


## SHOULDER INSTALLATION OPTION 1

NO STABILIZATION PINS REQUIRED

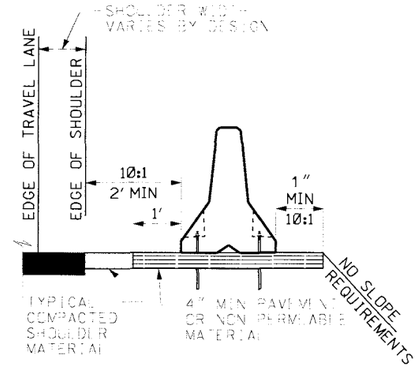


## SHOULDER INSTALLATION OPTION 2

STABILIZATION PINS REQUIRED

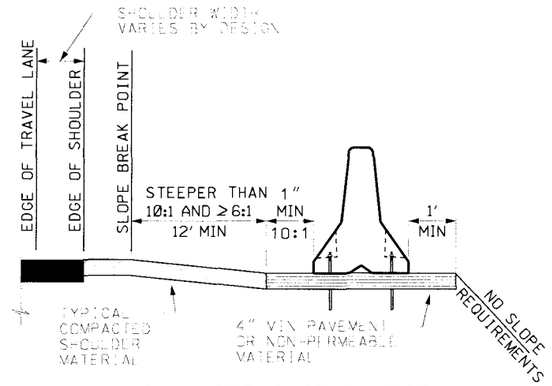


## SHOULDER INSTALLATION OPTION 3

STABILIZATION PINS REQUIRED

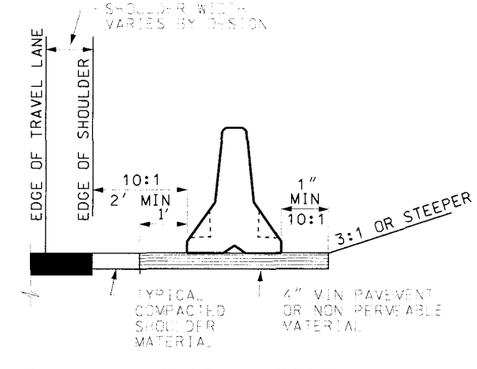


## SHOULDER INSTALLATION WITH 3:1 OR STEEPER BACKSLOPE

NO STABILIZATION PINS REQUIRED

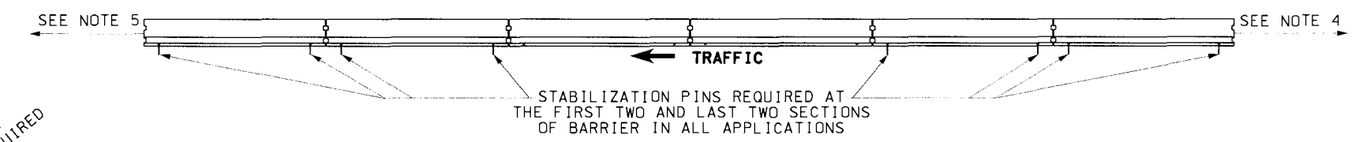


### FORMULAS FOR LENGTH OF NEED CALCULATIONS BURIED IN TERMINAL SECTION ONLY

**BACKSLOPE STEEPER THAN 3:1**

LON= FLR x D1

**BACKSLOPE 3:1 TO A MINIMUM 4:1**

≥ 50 MPH "LON"= 450 – (15 x D2)
≤ 45 MPH "LON"= 250 – (15 x D2)

LON: LENGTH OF NEED
FLR: BARRIER FLARE RATE
D1: DISTANCE FROM FACE OF BARRIER TO FACE OF HAZARD OR DITCH BOTTOM
D2: DISTANCE FROM EDGE OF TRAVEL LANE TO FACE OF HAZARD OR DITCH BOTTOM

### SECTION A–A

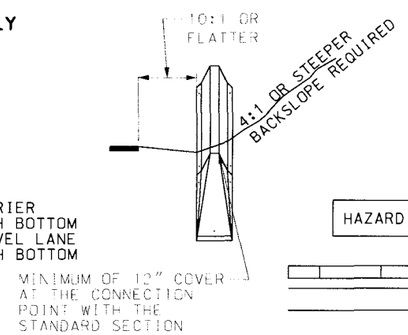


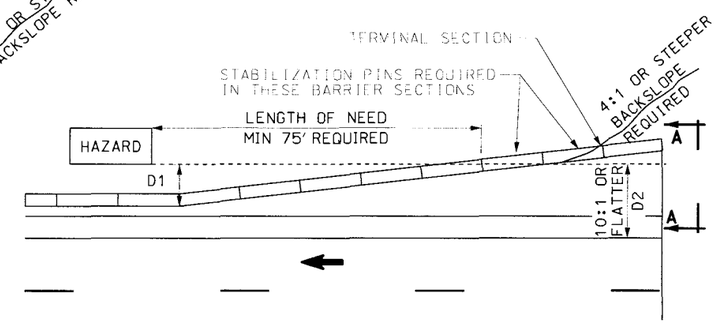


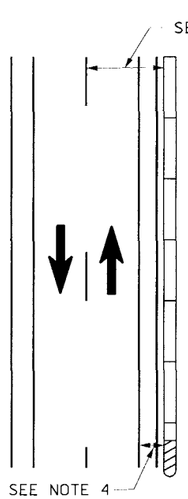


TWO LANE/TWO WAY

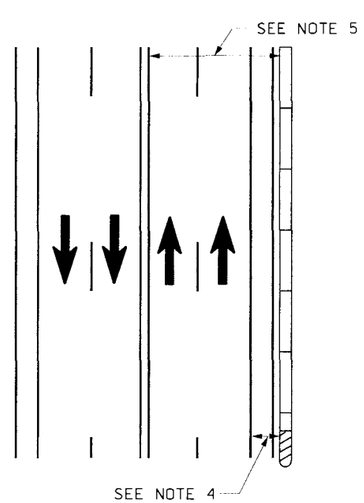


MULTI-LANE ARTERIAL

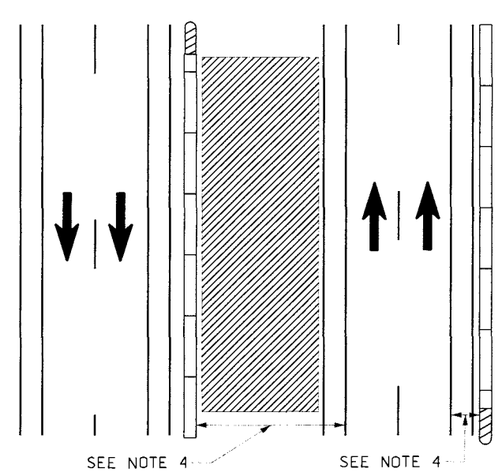


MULTI-LANE ARTERIAL WITH TRAVERSABLE MEDIAN

## NOTES:

1. USE REQUIRED CLEAR ZONE FROM THE ROADSIDE DESIGN GUIDE, CURRENT EDITION. USE APPROPRIATE FLARE RATE AS SUGGESTED IN ROADSIDE GUIDE, CURRENT EDITION. FOR RIGID BARRIER SYSTEMS, WHEN BARRIER IS PLACED WITH A FLARE.
2. PLACE BARRIER ON A 4″ PAVED OR NON-PERMEABLE SURFACE.
3. PIN ALL BARRIER SECTIONS TOGETHER AT CONNECTION LOOPS.
4. INSTALL APPROPRIATE CRASH CUSHION WHEN BARRIER END IS WITHIN 1.2 TIMES REQUIRED AASHTO CLEAR ZONE AND THE DESIGN SPEED IS GREATER THAN 40 MPH. TERMINAL SECTION (STD DWG BA 1C) USE PERMITTED FOR APPROACH TRAFFIC WHEN THE DESIGN SPEED FOR ROADWAY IS 40 MPH OR LESS. INSTALL TERMINAL SECTION (STD DWG BA 1C) WHEN THE APPROACH BARRIER END IS OUTSIDE 1.2 TIMES THE REQUIRED AASHTO CLEAR ZONE.
5. INSTALL APPROPRIATE CRASH CUSHION ON TRAILING END OF BARRIER WHEN BARRIER END IS WITHIN REQUIRED AASHTO CLEAR ZONE, AND THE DESIGN SPEED IS GREATER THAN 40 MPH. INSTALL TERMINAL SECTION (STD DWG BA 1C) WHEN BARRIER END IS OUTSIDE THE MINIMUM REQUIRED CLEAR ZONE BUT WITHIN 1.2 TIMES MAXIMUM THE REQUIRED AASHTO CLEAR ZONE.
6. THE CONCRETE BARRIER DESIGN ALLOWS FOR A 3′ OUTWARD LATERAL MOVEMENT IF THE BARRIER IS STRUCK. STABILIZATION PINS ARE NOT REQUIRED WHEN USED ON A SHOULDER APPLICATION AND THE REQUIRED SLOPE OF 8:1 OR FLATTER EXIST 3′ BEHIND THE BARRIER. USE STABILIZATION PINS WHEN THE SLOPES ARE STEEPER THAN 8:1 AND WITHIN 3′ OF THE BARRIER BACKSIDE.
7. PRE-DRILL A 1″ HOLE THROUGH THE PAVED SURFACE PRIOR TO INSTALLING THE STABILIZATION PIN.
8. DO NOT PLACE BARRIER ON TOP OF ANY CURBING.
9. DO NOT OVERLAY ANY MATERIAL PAST THE FIRST BREAK POINT ON THE BARRIER. THE FIRST BREAK POINT IS 3″ FROM THE BOTTOM OF THE BARRIER.
10. PLACE AN ADEQUATE AMOUNT OF SILICON ADHESIVE ON THE BOTTOM WASHER OF THE CONNECTION PIN BEFORE INSERTING, TO HOLD IN PLACE AND PREVENT EASY HAND REMOVAL.

| REVISIONS | | | |
|---|---|---|---|
| NO. | DATE | APPR. | REMARKS |

UTAH DEPARTMENT OF TRANSPORTATION
STANDARD DRAWINGS FOR ROAD AND BRIDGE CONSTRUCTION
SALT LAKE CITY, UTAH

RECOMMENDED FOR APPROVAL — JAN.01.2005 DATE
CHAIRMAN STANDARDS COMMITTEE APPROVED — JAN.01.2005 DATE
DEPUTY DIRECTOR

PRECAST CONCRETE FULL SECTION SHOULDER APPLICATIONS

STANDARD DRAWING TITLE

STD DWG
BA 1E

15-DEC-2004

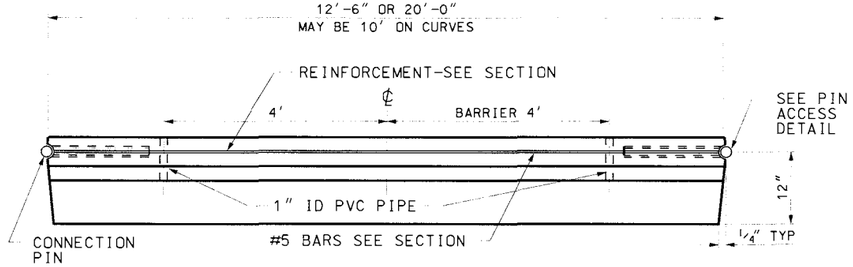


PLAN ELEVATION

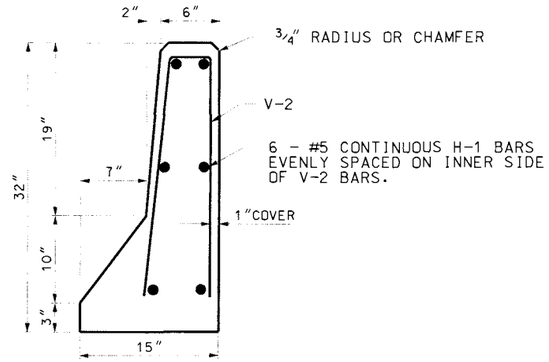


END ELEVATION

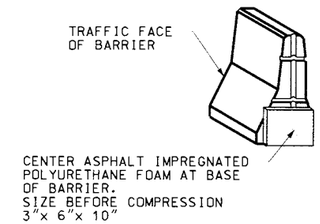


BARRIER SEAL

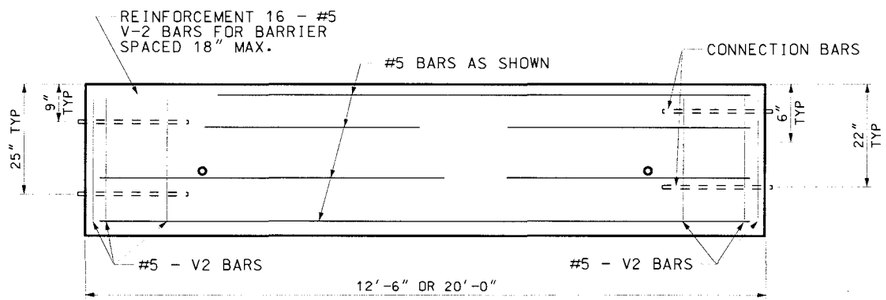


FRONT ELEVATION

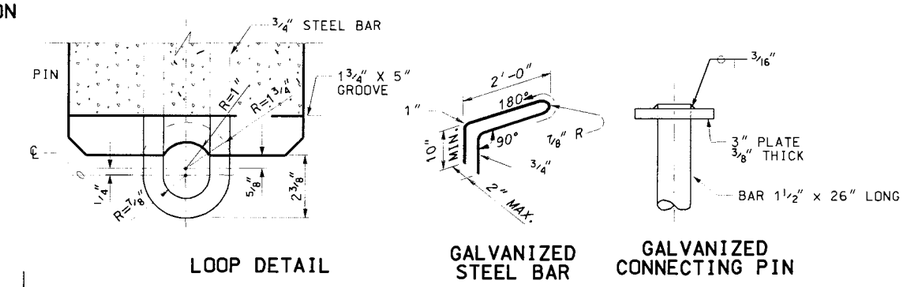


LOOP DETAIL

GALVANIZED STEEL BAR

GALVANIZED CONNECTING PIN

CONNECTION DETAILS

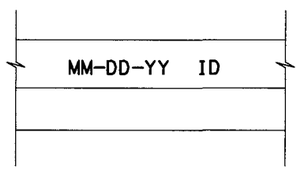


BARRIER MARKINGS

SEE NOTE 6

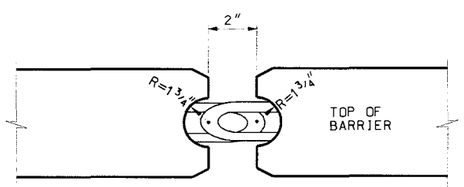


PIN ACCESS DETAIL

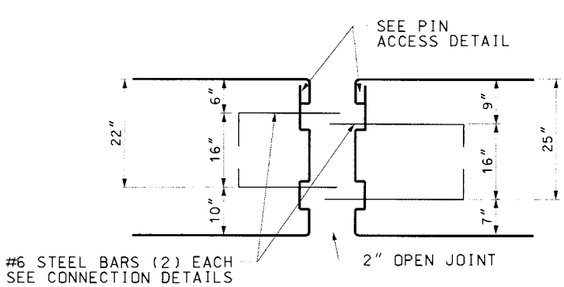


LOOP LOCATION ELEVATION

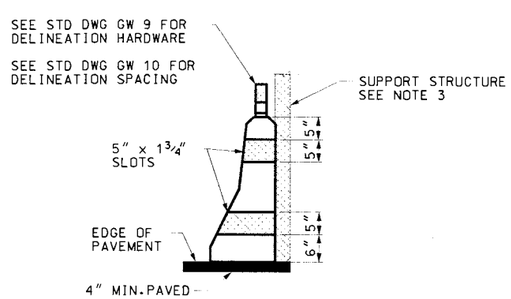


BARRIER SLOT DETAIL

**METAL REINFORCEMENT TABLE**

| MARK | LOCATION | BAR SIZE | NO. BARS | SKETCH |
|---|---|---|---|---|
| H-1 | HORIZONTAL IN BARRIER TIED INSIDE V-1 BARS | #5 | 6 | 19'-3" |
| V-2 | VERTICAL IN BARRIER (3) EACH END | #5 | 16 | TOTAL LENGTH 4'-9"; 2 3/8"R; 4 3/8"; 8"; 6°; 2'-1 3/8" |

## NOTES:

1. USE 3/4" RADIUS ON CHAMFER ON EXPOSED CONCRETE CORNER.
2. PLACE AN ADEQUATE AMOUNT OF SILICONE ADHESIVE ON BOTTOM OF WASHER BEFORE INSERTING PIN TO HOLD IN PLACE AND PREVENT EASY HAND REMOVAL.
3. PLACE PRECAST HALF BARRIER WHERE THERE IS A SUPPORT STRUCTURE BEHIND EACH SECTION (IE:SOUND WALL,MSE WALL)
4. DO NOT USE PRECAST HALF BARRIER AS AN ALTERNATE, OR IN CONJUNCTION WITH PRECAST CONCRETE FULL BARRIER SECTION IN A WORK ZONE.
5. USE COATED REINFORCING STEEL EXCEPT AS NOTED.
6. MARK EACH BARRIER WITH 2" NUMBERS INDICATE THE DATE OF CASTING AND IDENTIFICATION NUMBER SUPPLIED BY THE INSPECTOR. IMPRESSED 1/4" DEEP INTO THE TOP CENTER OF THE BARRIER.

REVISIONS

| NO. | DATE | APPR. | REMARKS |
|---|---|---|---|
| | | | |

UTAH DEPARTMENT OF TRANSPORTATION
STANDARD DRAWINGS FOR ROAD AND BRIDGE CONSTRUCTION
SALT LAKE CITY, UTAH

RECOMMENDED FOR APPROVAL — JAN.01.2005 DATE
CHAIRMAN STANDARDS COMMITTEE APPROVED — JAN.01.2005 DATE
DEPUTY DIRECTOR

PRECAST CONCRETE HALF BARRIER STANDARD SECTION

STANDARD DRAWING TITLE

STD DWG
BA 2

## APPROACH END (A)
SEE NOTE 4

## SLOPED TRAILING END (B) OPTION 1
SEE NOTE 4

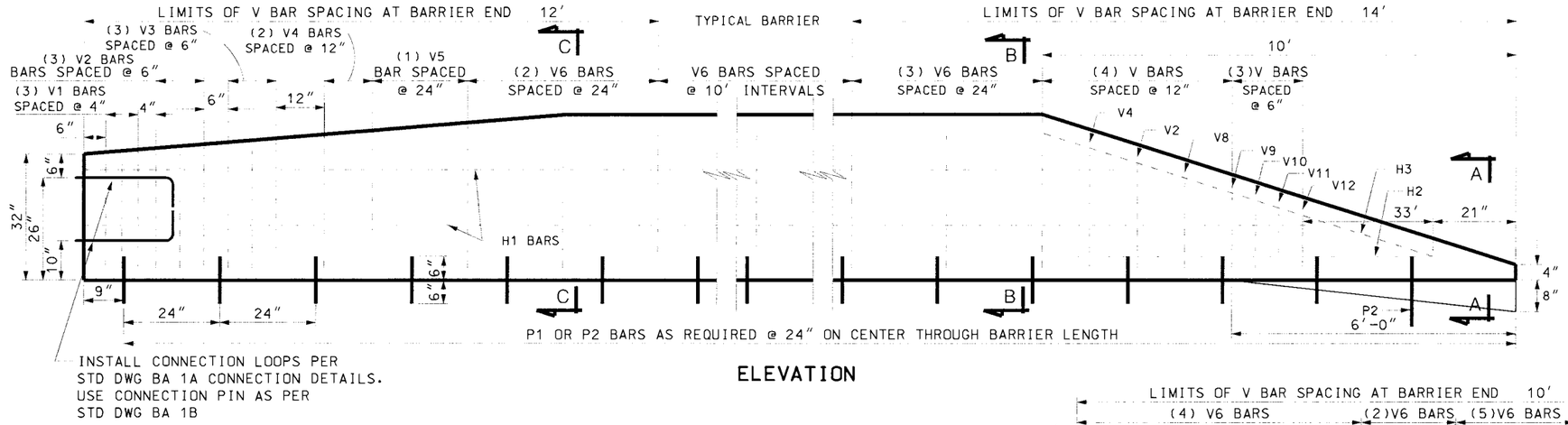


## ELEVATION

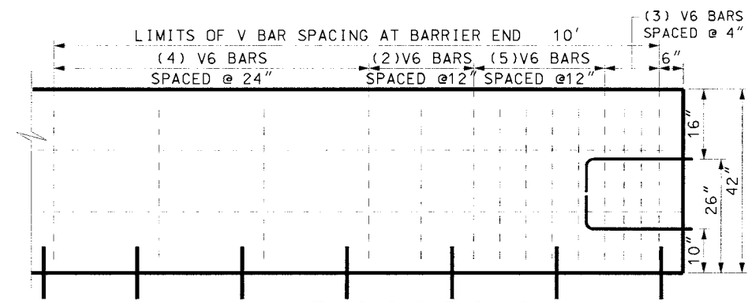


## TRAILING END (C) OPTION 2
SEE NOTES 4 & 8

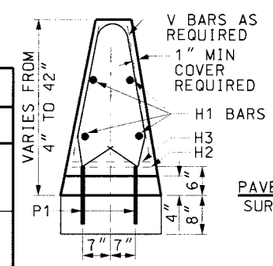


## SECTION A-A

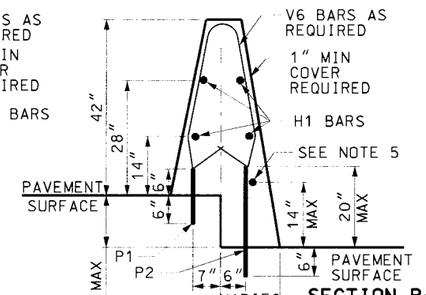


## SECTION B-B
STEPPED PAVEMENT

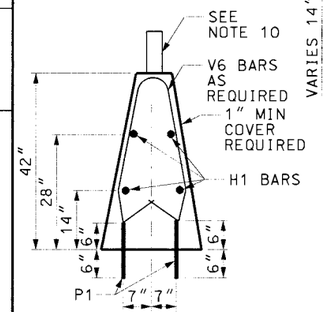


## SECTION B-B

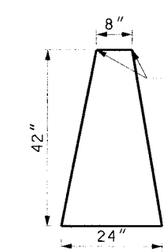


## TYPICAL SECTION

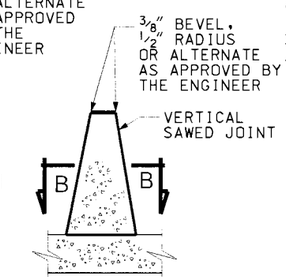


## SECTION THROUGH SAWED JOINT
SEE NOTE 6

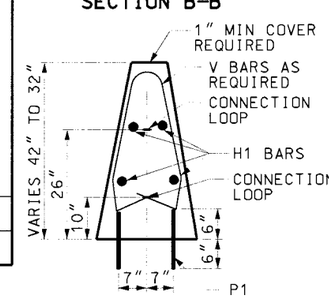


## SECTION C-C

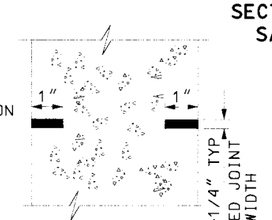


## SECTION B-B
SEE NOTE 6

## STEEL REINFORCEMENT TABLE

| MARK | BAR SIZE | (NO.) OF BARS | SKETCH |
|---|---|---|---|
| H1 | #5 | 4 OR 5 RUN THROUGH LENGTH OF BARRIER REQUIRED SPLICE LENGTH - 45" | |
| H2 | #5 | TRAILING END SECTION (B) BOTTOM SIDE | 8'-3" / 1'-7" |
| H3 | #5 | TRAILING END SECTION (B) TOP SIDE | 8'-3" / 6" / 1'-7" |

| END OPTION | | (A) | (B) | (C) | D |
|---|---|---|---|---|---|
| V1 | #5 | 3 | | | 28" |
| V2 | #5 | 3 | 1 | | 29" |
| V3 | #5 | 3 | | | 30" |
| V4 | #5 | 2 | 1 | | 32" |
| V5 | #5 | 1 | | | 34" |
| *V6 | #5 | 2 | 3 | 14 | 36" |
| V7 | #5 | | 1 | | 25" |
| V8 | #5 | | 1 | | 22" |
| V9 | #5 | | 1 | | 20" |
| V10 | #5 | | 1 | | 18" |
| V11 | #5 | | 1 | | 16" |
| P1 | #8 | BARRIER TO PAVEMENT | | | 12" LONG PINS @ 24" CENTERS |
| P2 | #8 | BARRIER TO PAVEMENT STEPPED PAVEMENT | | | 26" LONG PINS @ 24" CENTERS |

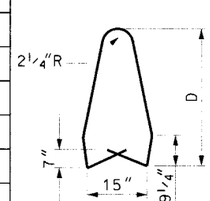


*V6 BARS SHOWN IN CHART ARE THE NUMBER OF BARS REQUIRED FOR EACH END OPTION.
SPACE V6 BARS AT 10' INTERVALS THROUGH TYPICAL BARRIER SECTION.

## NOTES:

1. THE ENGINEER APPROVES CONTRACTOR DEVISED METHOD OF POSITIONING THE LONGITUDINAL REINFORCING STEEL +/- 1/2" AS DIMENSIONED.
2. DO NOT USE TO SUPPORT HIGHWAY LIGHTING POLES. ADDITIONAL SUPPORT DETAILS REQUIRED.
3. DO NOT USE BARRIER FOR BRIDGE APPLICATIONS.
4. CHOOSE APPROPRIATE END TREATMENT:
   A. CONSTRUCT APPROACH END AS PER DETAIL APPROACH END (A) WHEN CRASH CUSHION INSTALLATION IS REQUIRED.
   B. CONSTRUCT TRAILING END AS PER DETAIL APPROACH END (A) WHEN CRASH CUSHION INSTALLATION IS REQUIRED.
   C. CONSTRUCT SLOPED TRAILING END (B) WHEN BARRIER END DOES NOT REQUIRE A CRASH CUSHION, IS OUTSIDE THE MINIMUM REQUIRED CLEAR ZONE, BUT IS WITHIN 1.2 TIMES THE MINIMUM REQUIRED CLEAR ZONE OF APPROACH TRAFFIC.
   D. USE OF SLOPED END PERMITTED FOR APPROACH TRAFFIC WHEN DESIGN SPEED IS 40 MPH OR LESS.
   E. FULL HEIGHT BARRIER, TRAILING END OPTION (C), IS ACCEPTABLE WHEN THE END IS GREATER THAN 1.2 TIMES MINIMUM REQUIRED CLEAR ZONE OF APPROACH TRAFFIC.
5. ATTACH ADDITIONAL H1 BAR TO P2 BAR WHEN STEPPED PAVEMENT CONFIGURATION REQUIRED.
6. SAW CONTRACTION JOINTS AT PAVEMENT TRANSVERSE JOINTS. WHEN INSTALLED WITH ASPHALT PAVEMENT SAW CONTRACTION JOINTS AT 15' INTERVALS.
7. V6 BARS PER TRAILING END OPTION 2 AT BOTH SIDES OF CONSTRUCTION JOINT.
8. USE COATED REINFORCEMENT STEEL EXCEPT AS NOTED.
9. USE CLASS AA(AE) CONCRETE.
10. SEE STD DWG GW 9 FOR DELINEATION HARDWARE AND STD DWG GW 10 FOR DELINEATION SPACING.

| NO. | DATE | APPR. | REMARKS |
|---|---|---|---|
| 1 | 02/24/05 | G.S. | REPLACED BA 3. |

REVISIONS

UTAH DEPARTMENT OF TRANSPORTATION
STANDARD DRAWINGS FOR ROAD AND BRIDGE CONSTRUCTION
SALT LAKE CITY, UTAH

RECOMMENDED FOR APPROVAL — FEB.24,2005 DATE
CHAIRMAN STANDARDS COMMITTEE APPROVED — FEB.24,2005 DATE
DEPUTY DIRECTOR

CAST IN PLACE CONSTANT SLOPE BARRIER
STANDARD DRAWING TITLE

STD DWG
BA 3A

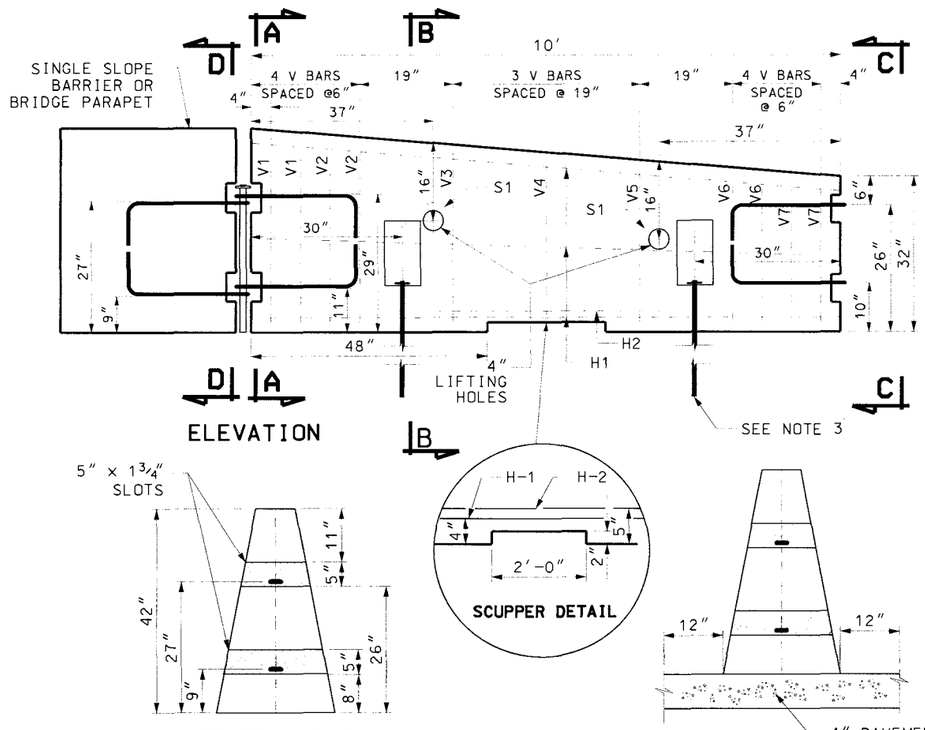


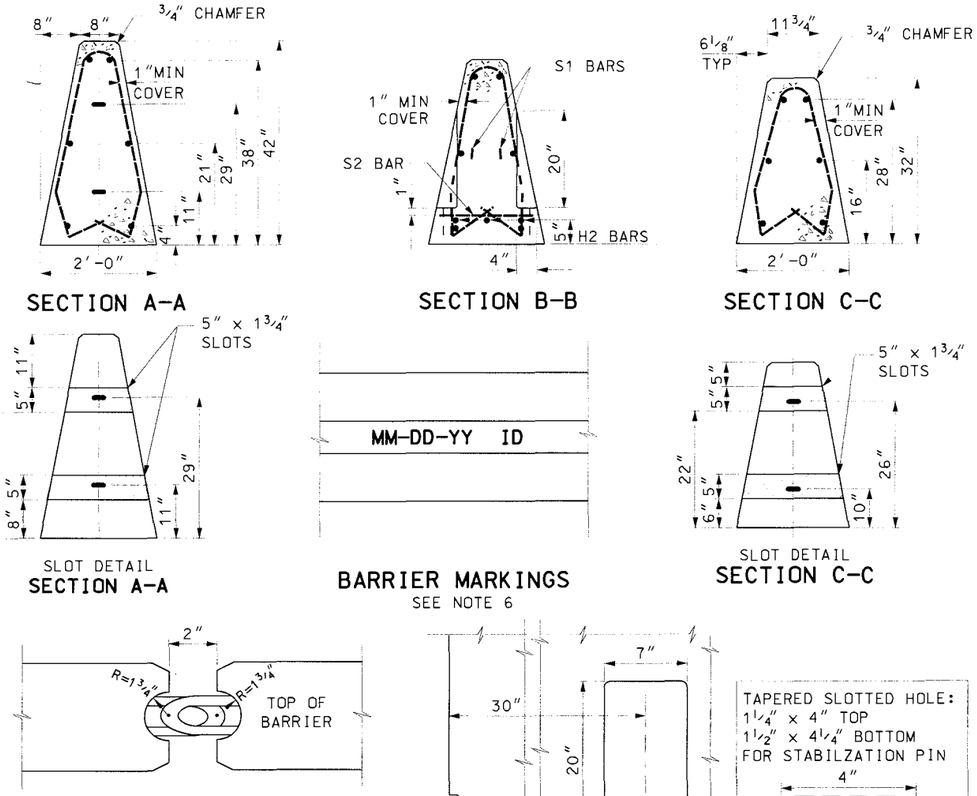


## STEEL REINFORCEMENT TABLE

| MARK | BAR SIZE | NO. OF BARS | SKETCH |
|---|---|---|---|
| H1 | #5 | (6) RUN THROUGH LENGTH OF BARRIER | 9'-1" |
| H2 | #5 | (3) BARS CENTERED OVER SCUPPER | 4'-4" |
| S1 | #4 | (2) 2 BARS CENTERED OVER EACH LIFTING HOLE | 3 3/8"R, 2'-5", 90°, 1" COVER |
| S2 | #4 | (2) BARS CENTERED 1" BELOW TOP OF STABILIZATION PIN SLOTS | 1 1/2"R, SLOTS, 7", 1'-6", 1" MIN CLEAR TO BAR |
| | | # | D |
| V1 | #5 | 2 | 38" |
| V2 | #5 | 2 | 37" |
| V3 | #5 | 1 | 35" |
| V4 | #5 | 1 | 34" |
| V5 | #5 | 1 | 33" |
| V6 | #5 | 2 | 30" |
| V7 | #5 | 2 | 29" |

(11) BARS PLACED AS PER ELEVATION DETAIL

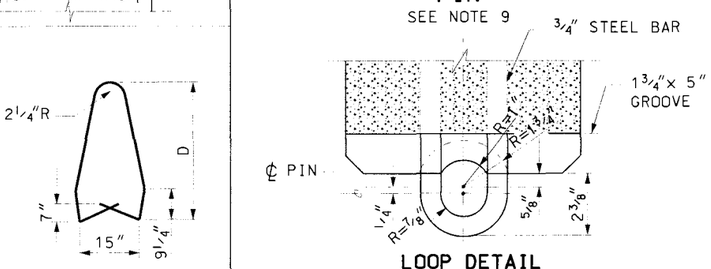


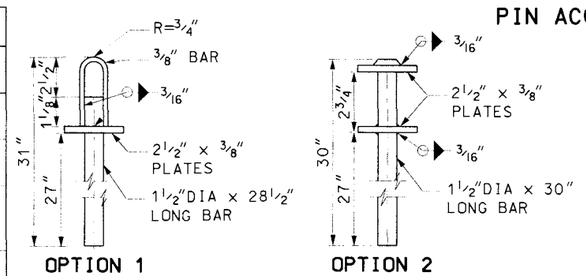


GALVANIZED CONNECTION PIN
SEE NOTE 9

GALVANIZED STABILIZATION PIN
SEE NOTE 9




CONNECTION DETAILS

## NOTES:

1. TRANSITION SECTION REQUIRED WHEN A CRASH CUSHION OR W-BEAM GUARDRAIL TRANSITION IS REQUIRED ON A CONSTANT SLOPE BRIDGE PARAPET.
2. PROVIDE 4" OF PAVEMENT OR NON-PERMEABLE MATERIAL 1' IN FRONT OF AND 1' ON BOTH SIDES OF TRANSITION SECTION. PLACE TRANSITION SECTION ON TOP OF FINAL PAVEMENT COURSE.
3. ALL APPLICATIONS REQUIRE THE INSTALLATION OF STABILIZATION PINS AND CONNECTION PINS. PRE DRILL 1" HOLE THROUGH PAVEMENT SURFACE PRIOR TO INSTALLING STABILIZATION PINS.
4. USE A 4" WHITE PVC SLEEVE TO FORM THE LIFTING HOLES. LEAVE SLEEVE IN PLACE AFTER CASTING.
5. PLACE AN ADEQUATE AMOUNT OF SILICONE ADHESIVE ON BOTTOM OF WASHER BEFORE INSERTING PIN TO HOLD IN PLACE AND PREVENT EASY HAND REMOVAL.
6. MARK EACH BARRIER WITH 1 1/2" NUMBERS INDICATING THE DATE OF CASTING AND IDENTIFICATION NUMBER SUPPLIED BY THE INSPECTOR. IMPRESSED 1/4" DEEP INTO THE TOP CENTER OF THE BARRIER.
7. USE COATED REINFORCEMENT STEEL.
8. USE CLASS AA(AE) CONCRETE.
9. USE OF A HOT FORGED HEAD. MEETING PLATE SIZE AND THICKNESS IS ACCEPTABLE IN PLACE OF A WELDED PLATE.

REVISIONS

| NO. | DATE | APPR. | REMARKS |
|---|---|---|---|
| 1 | 02-24-05 | G.S. | NEW DRAWING. |
| 2 | 08-25-05 | G.S. | ADDED NOTE 9. CORRECTED CONNECTION PIN OPTION 1 DIMENSIONS. CHANGED WELDING INFORMATION ON PIN DETAIL. |

UTAH DEPARTMENT OF TRANSPORTATION
STANDARD DRAWINGS FOR ROAD AND BRIDGE CONSTRUCTION
SALT LAKE CITY, UTAH

RECOMMENDED FOR APPROVAL — AUG.25,2005 DATE
CHAIRMAN STANDARDS COMMITTEE APPROVED — AUG.25,2005 DATE
DEPUTY DIRECTOR

PRECAST CONCRETE CONSTANT SLOPE TRANSITION SECTION FOR CRASH CUSHION AND W-BEAM GUARDRAIL
STANDARD DRAWING TITLE

STD DWG
BA 3B

08-SEP-2005 D:\Program Files\Bentley\Microstation V8XM\Workspace\projects\Approved\Connect\Connect5.DGN

## NOTES:

1. POSTS: SCHEDULE 40 PIPE. TRIPLE COATED HIGH TENSILE STEEL PIPE OR ROLL-FORMED C-SECTION OF THE SIZE SHOWN IN THE CHART AND AS DEFINED IN THE STANDARD SPECIFICATION. WEIGHT IN lb/ft WITH TOLERANCE OF 5 PERCENT. OTHER TYPES OF POSTS WITH EQUAL OR GREATER SECTION MODULUS MAY BE USED IF APPROVED, IN ADVANCE, BY THE ENGINEER.
2. FABRIC HEIGHTS LESS THAN 5': TRUSS RODS AND BRACES NOT REQUIRED.

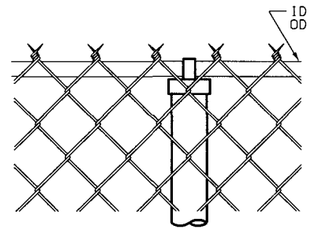


TWISTED & BARBED SELVAGE
TYPE I

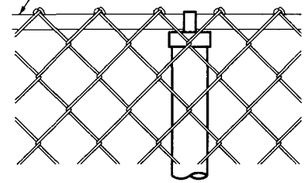

KNUCKLED SELVAGE
TYPE II

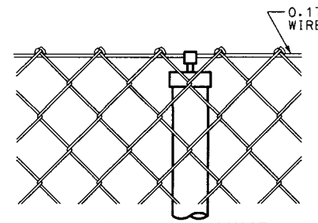


KNUCKLED SELVAGE
WITH TENSION WIRE
TYPE III

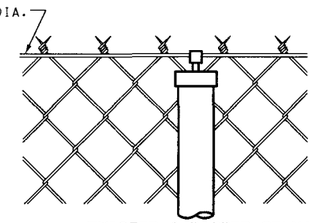

TWISTED & BARBED SELVAGE
WITH TENSION WIRE
TYPE IV

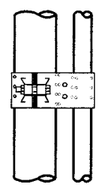

TOP
GATE HINGE

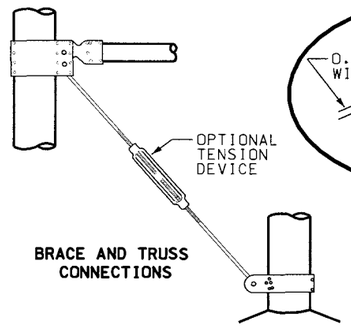


BRACE AND TRUSS
CONNECTIONS

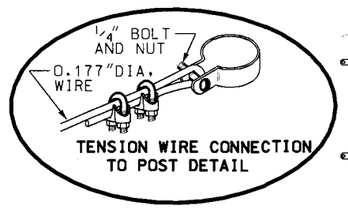


TENSION WIRE CONNECTION
TO POST DETAIL

GATE HOLD BACK
DETAIL

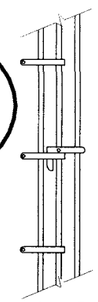

DROP ROD
ASSEMBLY

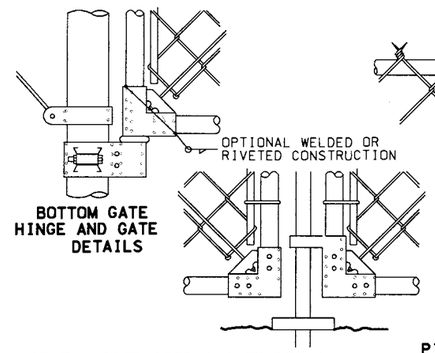


BOTTOM GATE
HINGE AND GATE
DETAILS

CENTER GATE STOP & GATE DETAIL

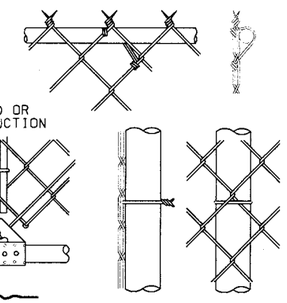

PIPE POST TIE

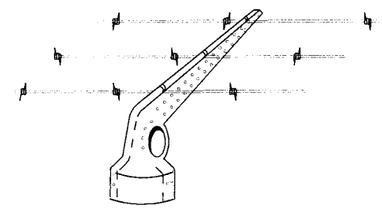

BARBED WIRE AND ARM
(WHEN REQUIRED)

### TYPICAL MULTIPLE BAY SEGMENT

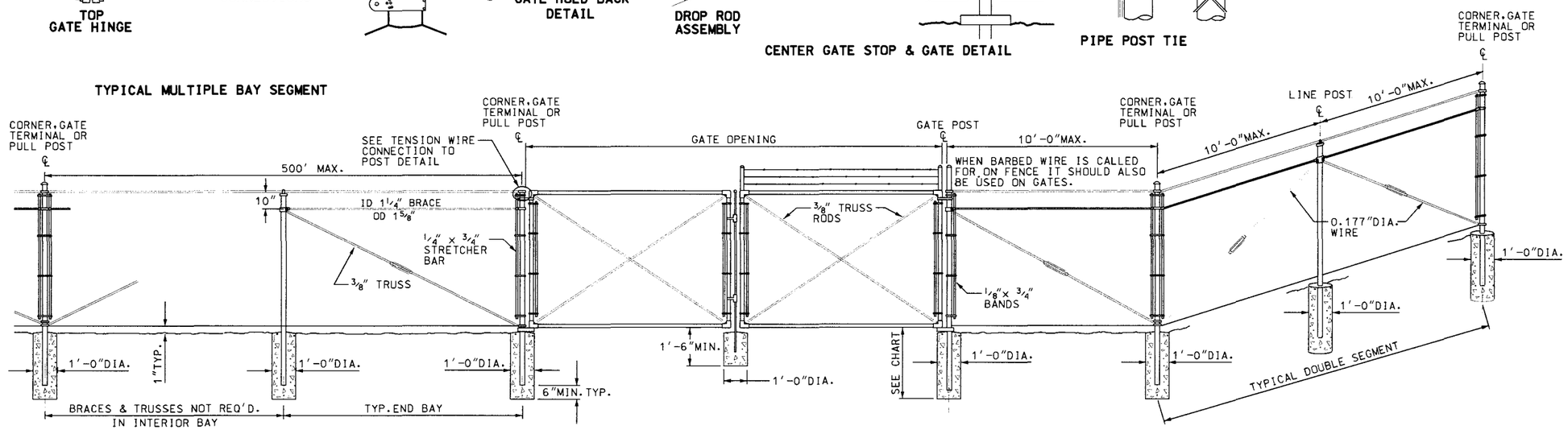


| HEIGHT | GATE OPENING | GATE POST | GATE FRAME |
|---|---|---|---|
| UNDER 6' | SINGLE TO 6' OR DOUBLE TO 12' | 2" | 1" |
| | SINGLE OVER 6' TO 8' OR DOUBLE OVER 12' TO 16' | 2½" | 1½" |
| | SINGLE OVER 8' TO 12' OR DOUBLE 16' TO 24' | 3½" | |
| 6' AND OVER * | SINGLE TO 6' OR DOUBLE TO 12' | 2½" | 1½" |
| | SINGLE OVER 6' TO 13' OR DOUBLE OVER 12' TO 24' | 3½" | |
| | SINGLE OVER 13' TO 18' OR DOUBLE OVER 24' TO 36' | 6" | |
| | SINGLE OVER 18' OR DOUBLE OVER 36' | 8" | |

* GATES OVER 6' IN HEIGHT AND WIDER THAN 12' WILL REQUIRE 3 INDUSTRIAL PRESSED STEEL HINGES.

| HEIGHT OF FABRIC | DEPTH OF POSTS | LENGTH OF END CORNER OR PULL POSTS | LENGTH OF LINE POSTS | SIZE OF POSTS | | | | | | | | | |
|---|---|---|---|---|---|---|---|---|---|---|---|---|---|
| | | | | END, CORNER & PULL POSTS | | | | LINE POST MIN. SIZE | | | | | |
| | | | | NOM. SIZE | OUTSIDE DIA. | PIPE WEIGHT ASTM A 120 | PIPE WEIGHT TRIPLE COAT | NOM. SIZE | OUTSIDE DIA. | PIPE WEIGHT ASTM A 120 | PIPE WEIGHT TRIPLE COAT | OUTSIDE DIMENSIONS C-SECTION | WT/FT |
| 7' | 3' | 10' | 9'-8" | 2½" | 2.875" | 5.79 | 4.64 | 2" | 2.375" | 3.65 | 3.11 | 1.875 x 1.625 | 2.28 |
| 6' | 3' | 9' | 8'-8" | 2" | 2.375" | 3.65 | 3.11 | 1½" | 1.900" | 2.72 | 2.23 | 1.875 x 1.625 | 1.85 |
| 5' | 3' | 8' | 7'-8" | 2" | 2.375" | 3.65 | 3.11 | 1½" | 1.900" | 2.72 | 2.23 | 1.875 x 1.625 | 1.85 |
| 4' | 2' | 6' | 5'-8" | 2" | 2.375" | 3.65 | 3.11 | 1½" | 1.900" | 2.72 | 2.23 | 1.875 x 1.625 | 1.85 |
| 3' | 2' | 5' | 4'-8" | 2" | 2.375" | 3.65 | 3.11 | 1½" | 1.900" | 2.72 | 2.23 | 1.875 x 1.625 | 1.85 |

| NO. | DATE | APPR. | REMARKS |
|---|---|---|---|
| | | | |

REVISIONS

UTAH DEPARTMENT OF TRANSPORTATION
STANDARD DRAWINGS FOR ROAD AND BRIDGE CONSTRUCTION
SALT LAKE CITY, UTAH

RECOMMENDED FOR APPROVAL — JAN.01,2005 DATE
CHAIRMAN STANDARDS COMMITTEE APPROVED — JAN.01,2005 DATE
DEPUTY DIRECTOR

CHAIN LINK FENCE
STANDARD DRAWING TITLE

STD DWG
FG 6

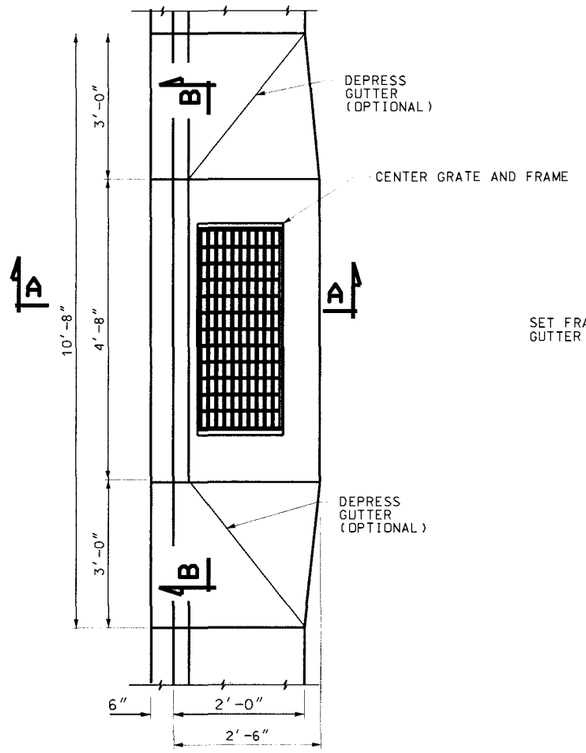


PLAN

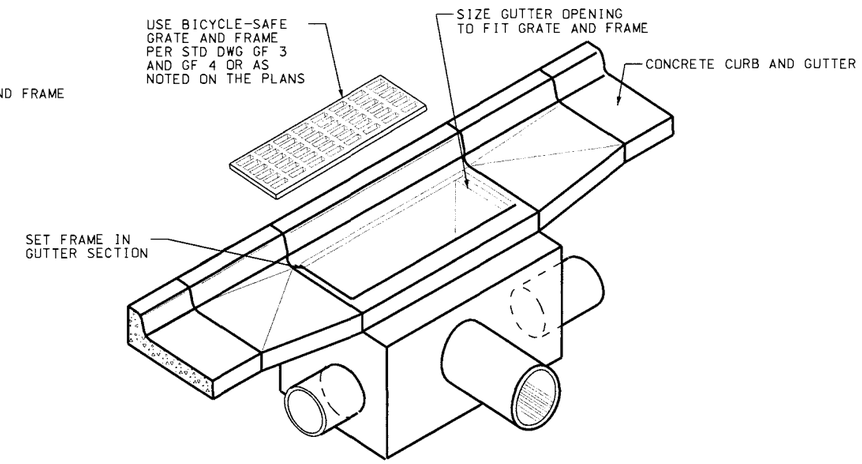


ISOMETRIC VIEW

## NOTES:

1. USE CLASS AA(AE) CONCRETE.
2. TYPE II CEMENT (LOW ALKALI) REQUIRED.
3. FOR NUMBER, LOCATION AND SIZE OF PIPE(S) SEE ROADWAY PLANS.
4. PROVIDE 3/4" CHAMFER ON ALL EXPOSED CONCRETE CORNERS.
5. FOR GRATE AND FRAME SEE STD DWG GF 3 OR GF 4.

## DESIGN DATA

HS 20 OR INTERSTATE ALTERNATE LOADING IN ACCORDANCE WITH AASHTO 17th EDITION SPECIFICATIONS.

STRUCTURAL STEEL: Fy = 36,000 psi

STRUCTURAL CONCRETE: f'c = 4,000 psi
fy = 60,000 psi
n = 8

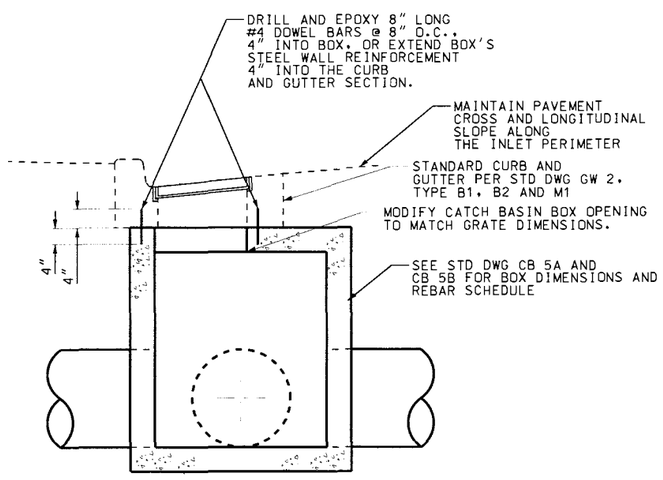


SECTION A-A

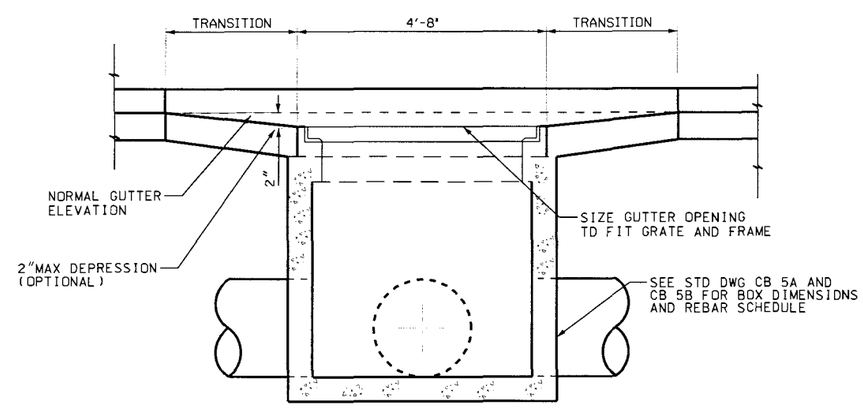


SECTION B-B

REVISIONS

| NO. | DATE | APPR. | REMARKS |
|---|---|---|---|
| 1 | 04/28/05 | M.F. | WIDTH OF BOX IN SECTION B-B MODIFIED SO DIMENSION LINES ARE CLEARLY SHOWN. |

UTAH DEPARTMENT OF TRANSPORTATION
STANDARD DRAWINGS FOR ROAD AND BRIDGE CONSTRUCTION
SALT LAKE CITY, UTAH

RECOMMENDED FOR APPROVAL — APR.28,2005 DATE
CHAIRMAN STANDARDS COMMITTEE
APPROVED — APR.28,2005 DATE
DEPUTY DIRECTOR

# CURB AND GUTTER INLET

STD DWG
CB 1

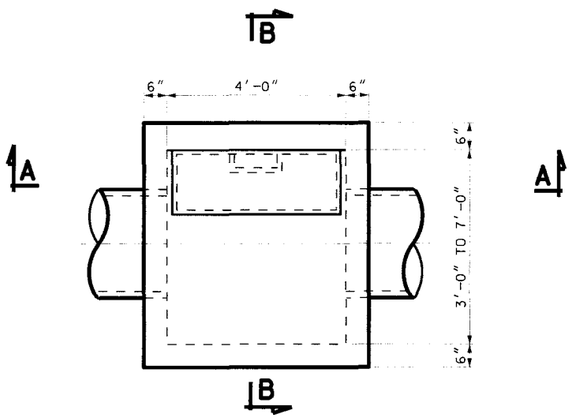


PLAN

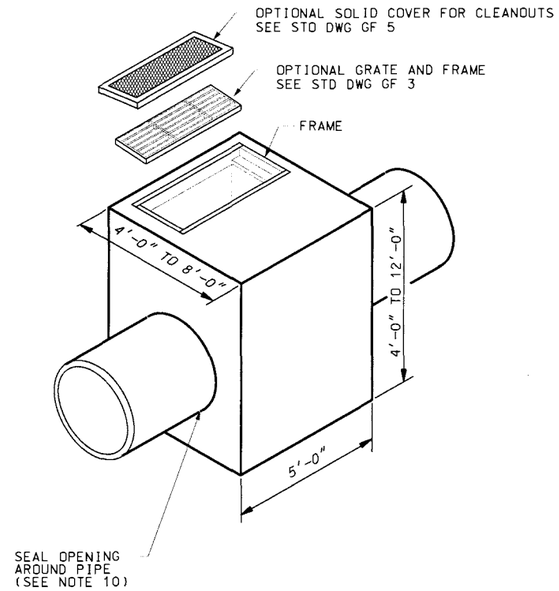


## NOTES

1. USE COATED DEFORMED BILLET REINFORCING STEEL BARS CONFORMING TO AASHTO M 284 OR M 111 AND M 31, GRADE 60 RESPECTIVELY.
2. USE TYPE II CEMENT (LOW ALKALI).
3. PROVIDE 3/4" CHAMFER ON ALL EXPOSED CONCRETE CORNERS EXCEPT WHERE NOTED OTHERWISE.
4. USE CONCRETE CLASS AA(AE).
5. PROVIDE MINIMUM 2" COVER FOR ALL REINFORCING STEEL.
6. FOR CURB AND GUTTER APPLICATIONS SEE STD DWG CB 1 AND CB 2 FOR BOX ELEVATIONS. INCLUDE CONCRETE QUANTITIES FOR CURB AND GUTTER IN ROADWAY QUANTITIES.
7. FOR MANHOLE STEPS SEE STD DWG GF 6.
8. USE 8" LONG, # 4 DOWEL BARS @ 8" O.C. MAX. OR EXTEND BOX REBARS 4"INTO THE CURB AND GUTTER, TO ATTACH CURB AND GUTTER TO THE BOX.
9. WHEN USING THE BOX AS AN INLET, SET EDGES OF THE BOX TO MATCH PAVEMENT FINISH GRADE AROUND BOX PERIMETER. SET TOP OF BOX SURFACE TO MATCH PAVEMENT CROSS AND LONGITUDINAL SLOPES. RESET ANY BOXES WHERE BOX SURFACE OR GRATE AND FRAME IS NOT FLUSH WITH PAVEMENT. DO NOT EXCEED 1/4" GRATE DEPRESSION.
10. CENTER PIPE IN BOX OPENING, USE NO-SHRINK GROUT TO SEAL OPENING AROUND THE PIPE, OR USE PIPE MANUFACTURER PIPE-BOOT INSTEAD.

## DESIGN DATA

HS 20 OR INTERSTATE ALTERNATE LOADING IN ACCORDANCE WITH AASHTO 17th EDITION SPECIFICATIONS.

STRUCTURAL STEEL: Fy = 36,000 psi

STRUCTURAL CONCRETE: f'c = 4,000 psi
fy = 60,000 psi
n = 8

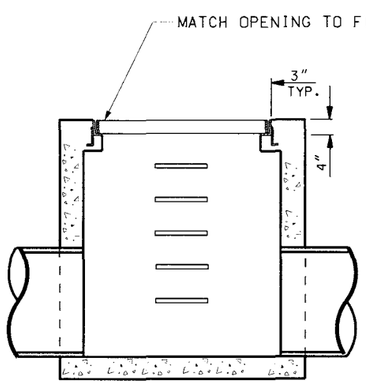


SECTION A-A

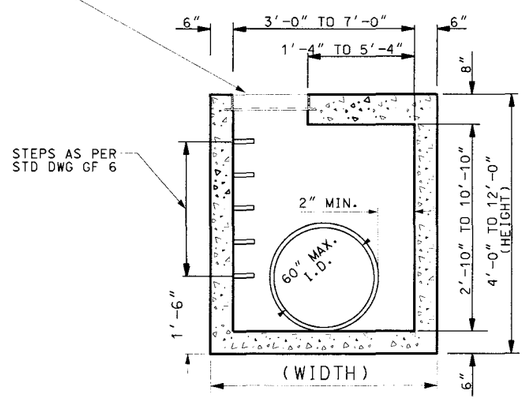


SECTION B-B

CATCH BASIN / CLEANOUT BOX

GRATE AND FRAME APPLICATION

## QUANTITIES

(FOR DESIGN INFORMATION ONLY)

USE THE FOLLOWING EQUATIONS FOR CALCULATING VOLUME OF CONCRETE AND WEIGHT OF STEEL:
(ENTER ALL DIMENSIONS IN FEET)

CONCRETE VOLUME

BOX WIDTHS OF 4' TO 8' & DEPTHS OF 4' TO 12'

CONCRETE VOLUME (CU YDS) = (0.037*WIDTH+0.1853) *DEPTH+ (0.2161*WIDTH - 0.2811)

TO CALCULATE VOLUME OF CONCRETE OF PIPE HOLES
VOLUME OF HOLES (CU YDS) = 0.0083 * (PIPE DIAMETER) - 0.0929

WEIGHT OF REINFORCING STEEL

BOX WIDTHS OF 4' UP TO 8' & DEPTHS OF 4' TO 12'

REBAR WEIGHT (LBS) = ( 4.101*WIDTH + 19.869 ) * DEPTH + (19.742 * WIDTH + 15.267)

REVISIONS

| NO. | DATE | APPR. | REMARKS |
|---|---|---|---|
| 1 | 06/30/05 | M.F. | CORRECTED SECTION B-B TO CHANGE 2' MAX TO 2' MIN. |

UTAH DEPARTMENT OF TRANSPORTATION
STANDARD DRAWINGS FOR ROAD AND BRIDGE CONSTRUCTION
SALT LAKE CITY, UTAH

RECOMMENDED FOR APPROVAL — JUN.30.2005 DATE
CHAIRMAN STANDARDS COMMITTEE APPROVED — JUN.30.2005 DATE
DEPUTY DIRECTOR

STANDARD DRAWING TITLE: STANDARD CATCH BASIN AND CLEANOUT BOX

STD DWG
CB 5A

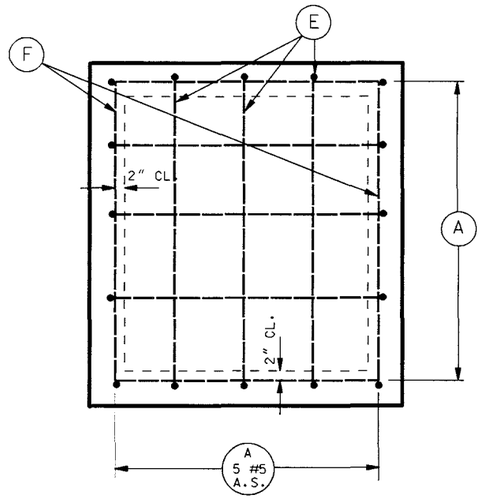


PLAN BOTTOM SLAB

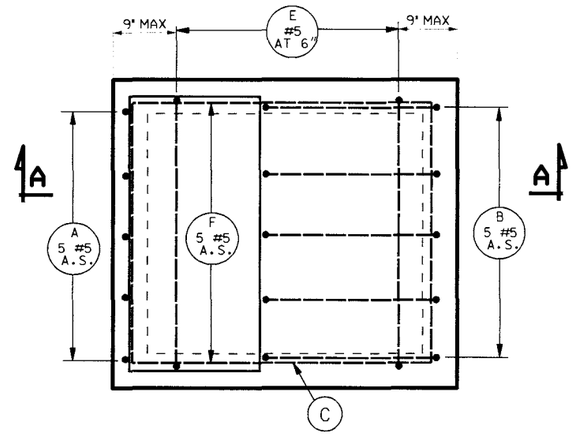


PLAN TOP SLAB

## NOTES

1. PROVIDE FORMED INVERT AS SHOWN IN THE DETAIL ON THIS SHEET.
2. FIELD CUT AND BEND REINFORCING STEEL AS NECESSARY TO CLEAR PIPE(S) AND GRATE OPENINGS, AND MAINTAIN 2" COVER.
3. SEE STD DWG CB 5A FOR ALLOWABLE DIMENSIONS.
4. MAXIMUM PIPE DIMENSIONS ARE FOR PIPES PERPENDICULAR TO WALLS OF BOX. DETERMINE CLEARANCES FOR SKEWED PIPES.
5. FOR MANHOLE STEP DETAILS, SEE STD DWG GF 6.
6. ALL REINFORCING BARS TO BE #5 BARS @ 12" UNLESS OTHERWISE SHOWN.
7. EXTEND BARS A AND B INTO CURB AND GUTTER WHEN CASTING FOR CATCH BASIN ON STD DWG CB 1 AND CB 2.
8. REPAIR ANY DAMAGE OR CUTS TO EPOXY COATING.

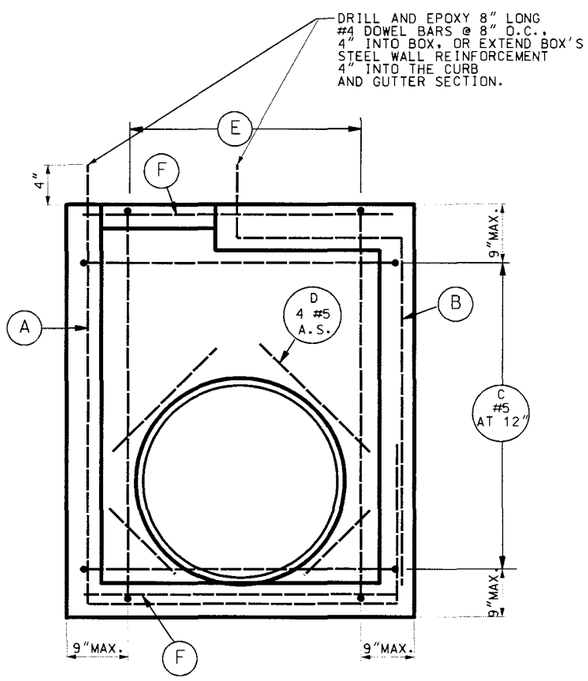


SECTION A-A

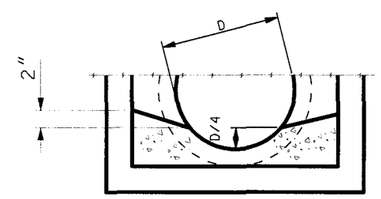


FORMED INVERT

**REINFORCING STEEL LAYOUT**

PROVIDE 2" MIN. COVER TO ALL BARS

| BAR A | BAR B | BAR C | BAR D | BAR E | BAR F |
|---|---|---|---|---|---|
| | | 8" | | 8" | |

REVISIONS

| NO. | DATE | APPR. | REMARKS |
|---|---|---|---|
| | | | |

UTAH DEPARTMENT OF TRANSPORTATION
STANDARD DRAWINGS FOR ROAD AND BRIDGE CONSTRUCTION
SALT LAKE CITY, UTAH

RECOMMENDED FOR APPROVAL — JAN.01,2005 DATE
CHAIRMAN STANDARDS COMMITTEE APPROVED — JAN.01,2005 DATE
DEPUTY DIRECTOR

STANDARD CATCH BASIN AND CLEANOUT BOX SECTION

STANDARD DRAWING TITLE

STD DWG
CB 5B

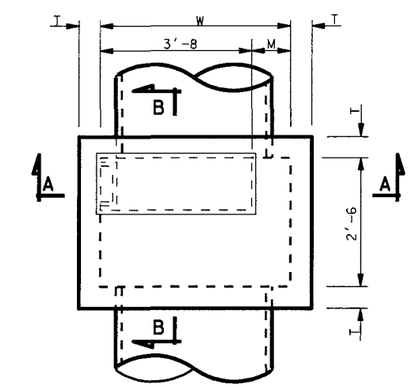


PLAN

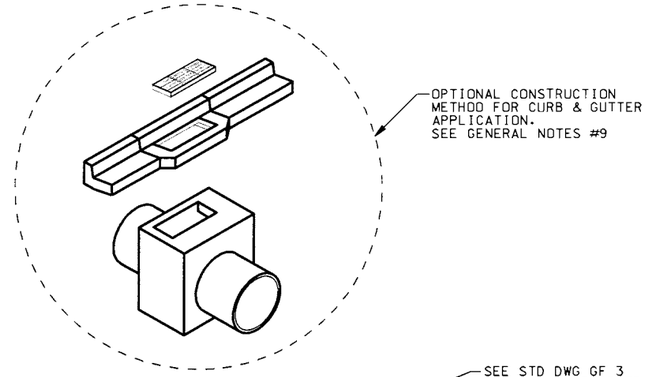


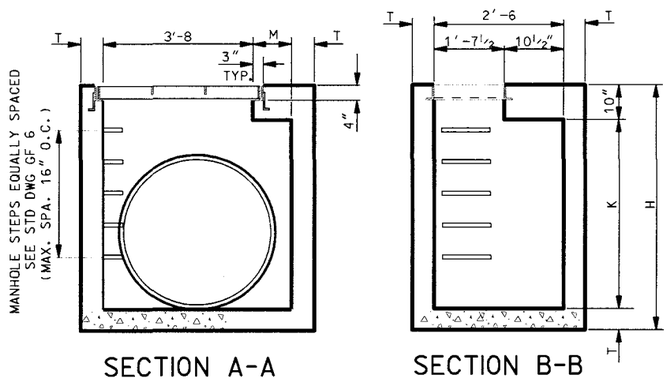


SECTION A-A

SECTION B-B

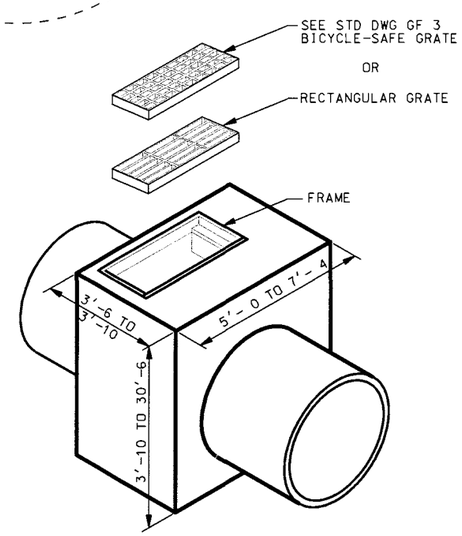


CATCH BASIN
GRATE AND FRAME APPLICATION

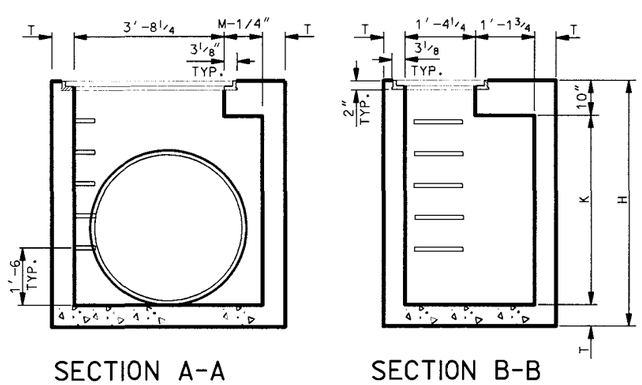


SECTION A-A

SECTION B-B

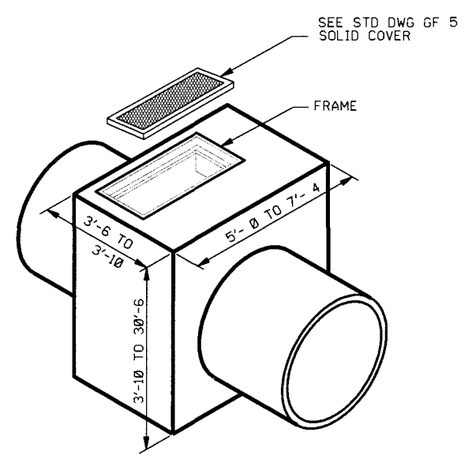


CLEANOUT BOX
SOLID COVER APPLICATION

## GENERAL NOTES FOR CB 10A TO CB 10C

1. USE COATED DEFORMED BILLET REINFORCING STEEL BARS CONFORMING TO AASHTO M 284 OR M 111 AND M 31 GRADE 60 RESPECTIVELY.
2. USE TYPE II CEMENT (LOW ALKALI) UNLESS SPECIFIED OTHERWISE.
3. CHAMFER ALL EXPOSED CORNER ¾" EXCEPT WHERE NOTED OTHERWISE.
4. USE CONCRETE CLASS AA(AE) FOR ALL CAST-IN-PLACE CONCRETE EXCEPT WHERE SPECIFIED OTHERWISE.
5. PROVIDE 2" CONCRETE COVER TO REINFORCING STEEL EXCEPT WHERE NOTED OTHERWISE.
6. USE STRUCTURAL STEEL CONFORMING TO AASHTO M 270 GRADE 36 EXCEPT WHERE NOTED OTHERWISE.
7. SEE STD DWG GF 3 AND GF 5 FOR GRATING, FRAME AND SOLID COVER DETAILS.
8. SEE ROADWAY PLANS FOR DETAILS OF INSTALLATION, INCLUDING LOCATION OF UNITS NUMBER OF UNITS REQUIRED, TYPE OF UNITS, SIZE AND LOCATION OF PIPE(S).
9. FOR CURB & GUTTER APPLICATIONS ADJUST FINISH GRADE ELEVATION OF BOX AS REQUIRED. INCLUDE CONCRETE QUANTITIES FOR CURB & GUTTER IN ROADWAY QUANTITIES.
10. USE CLASS AA(AE) CAST-IN-PLACE CONCRETE EXCEPT WHERE SPECIFIED OTHERWISE.

## DESIGN DATA

HS-20-44 OR INTERSTATE ALTERNATE MILITARY LOADING IN ACCORDANCE WITH CURRENT AASHTO AND INTERIM SPECIFICATIONS.

CAST-IN-PLACE STRUCTURAL CONCRETE: Fc = 1,400 psi n = 8
REINF. STEEL: Fs = 24,000 psi
STRUCTURAL STEEL: Fs = 20,000 psi

## QUANTITIES

STRUCTURAL CONCRETE
REINFORCING STEEL } SEE SCHEDULE OF INSTALLATION

## INDEX OF SHEETS


(CB 10A) 1- SITUATION & LAYOUT
(CB 10B) 2- SECTION DETAILS
(CB 10C) 3- SCHEDULE OF INSTALLATION FOR 42"-60" RCP. 48"-72" CMP.


| NO. | DATE | APPR. | REMARKS |
|---|---|---|---|
| | | | |

REVISIONS

UTAH DEPARTMENT OF TRANSPORTATION
STANDARD DRAWINGS FOR ROAD AND BRIDGE CONSTRUCTION
SALT LAKE CITY, UTAH

RECOMMENDED FOR APPROVAL — JAN.01,2005 DATE
CHAIRMAN STANDARDS COMMITTEE APPROVED — JAN.01,2005 DATE
DEPUTY DIRECTOR

STANDARD CATCH BASIN AND CLEANOUT BOX SITUATION AND LAYOUT

STANDARD DRAWING TITLE

STD DWG
CB 10A

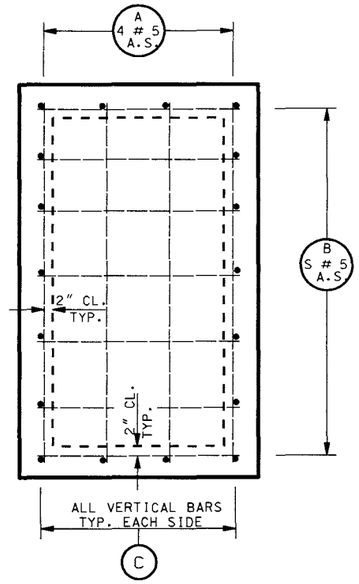


PLAN BOTTOM SLAB

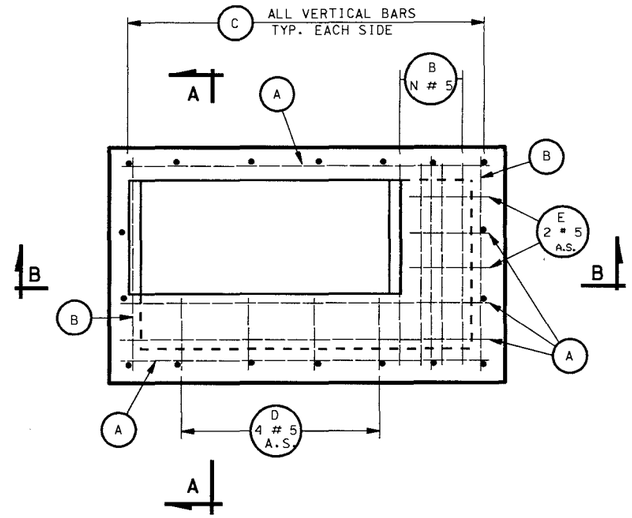


PLAN TOP SLAB

## NOTES:

1. QUANTITIES SHOWN IN THE SCHEDULE OF INSTALLATION ARE FOR ONE UNIT ONLY.
2. FORM THE BOTTOM SLAB OF THE BOX TO FIT THE INVERT OF THE PIPE(S) WHEN SO REQUIRED ACCORDING TO THE DETAIL SHOWN ON THIS SHEET. SEE TABLE 3 ON STD DWG CB 10C FOR ADDITIONAL CONCRETE QUANTITIES.
3. DEDUCT CONCRETE DISPLACED BY PIPE(S) FROM THOSE CONCRETE QUANTITIES GIVEN IN SCHEDULE OF TABLE 1 ON STD DWG CB 10C.
4. WHEN FORMED INVERT IS REQUIRED, SEE TABLE 3 ON STD DWG CB 10C FOR ADDITIONAL CONCRETE QUANTITIES.
5. PROVIDE 2" CONCRETE COVER TO REINFORCING STEEL EXCEPT WHERE NOTED OTHERWISE.
6. UNLESS OTHERWISE SHOWN, ALL DIMENSIONS ARE OUT TO OUT OF BARS.
7. WEIGHT QUANTITIES FOR GRATE AND FRAME, AND SOLID COVER AND FRAME ARE SHOWN FOR INFORMATION ONLY.
8. SEE STD DWG CB 10A FOR DIMENSIONS.
9. PIPE DIAMETERS SHOWN IN TABLES AND SCHEDULE ARE INSIDE DIAMETERS.
10. MAXIMUM PIPE DIMENSIONS SHOWN IN SCHEDULE OF INSTALLATION ARE FOR PIPES PERPENDICULAR TO WALLS OF BOX. DETERMINE CLEARANCES FOR SKEWED PIPES.
11. SEE STD DWG GF 6 FOR MANHOLE STEP DETAILS.
12. USE #5 BARS FOR ALL REINFORCING @ 12" UNLESS OTHERWISE SHOWN.
13. WHEN SOLID COVER IS REQUIRED, ADD .023 CU.YDS. OF CONCRETE TO THOSE QUANTITIES GIVEN IN SCHEDULE OF INSTALLATION AND ADD 3" TO EACH D-BAR, AND 1.0 LB TO REINFORCING STEEL QUANTITIES.
14. USE COATED DEFORMED BILLET REINFORCING STEEL BARS CONFORMING TO AASHTO M 284, OR M 111 AND M 31 GRADE 60 RESPECTIVELY.
15. CHAMFER ALL EXPOSED CONCRETE CORNERS $^3/_4$" EXCEPT WHERE NOTED OTHERWISE.
16. USE CLASS AA(AE) CAST CONCRETE EXCEPT WHERE SPECIFIED OTHERWISE.

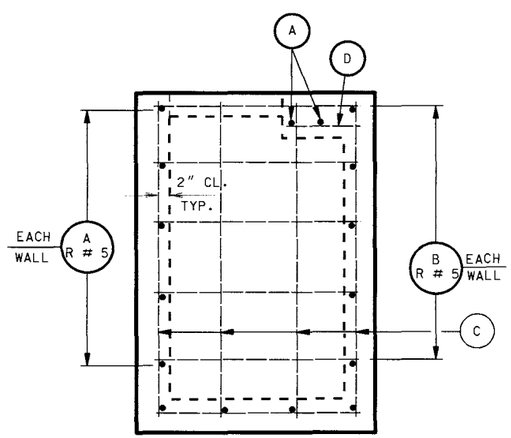


SECTION A-A

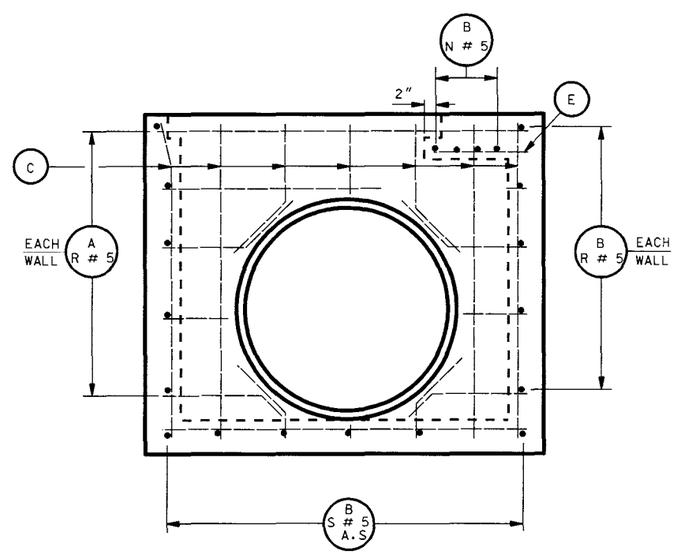


SECTION B-B

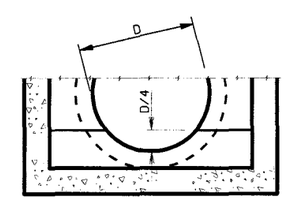


FORMED INVERT

REVISIONS

| NO. | DATE | APPR. | REMARKS |
|---|---|---|---|
| | | | |

UTAH DEPARTMENT OF TRANSPORTATION
STANDARD DRAWINGS FOR ROAD AND BRIDGE CONSTRUCTION
SALT LAKE CITY, UTAH

RECOMMENDED FOR APPROVAL — JAN.01.2005 DATE

CHAIRMAN STANDARDS COMMITTEE APPROVED — JAN.01.2005 DATE

DEPUTY DIRECTOR

STANDARD CATCH BASIN AND CLEANOUT BOX SECTION DETAILS

STANDARD DRAWING TITLE

STD DWG

CB 10B

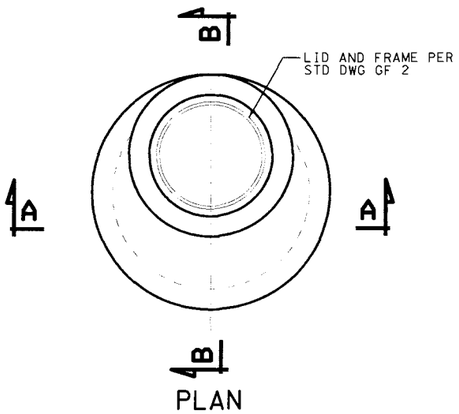


PLAN

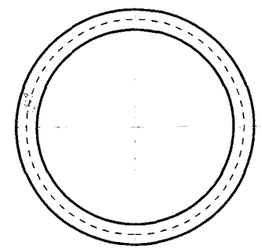

SECTION C-C

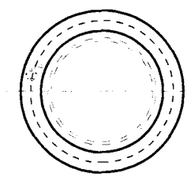

SECTION D-D

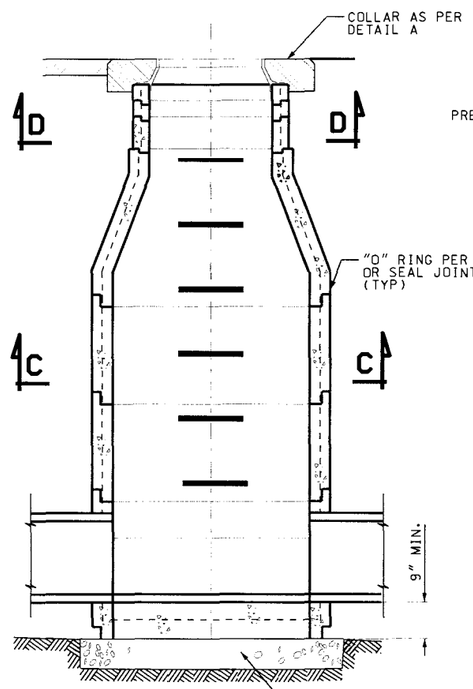


SECTION A-A

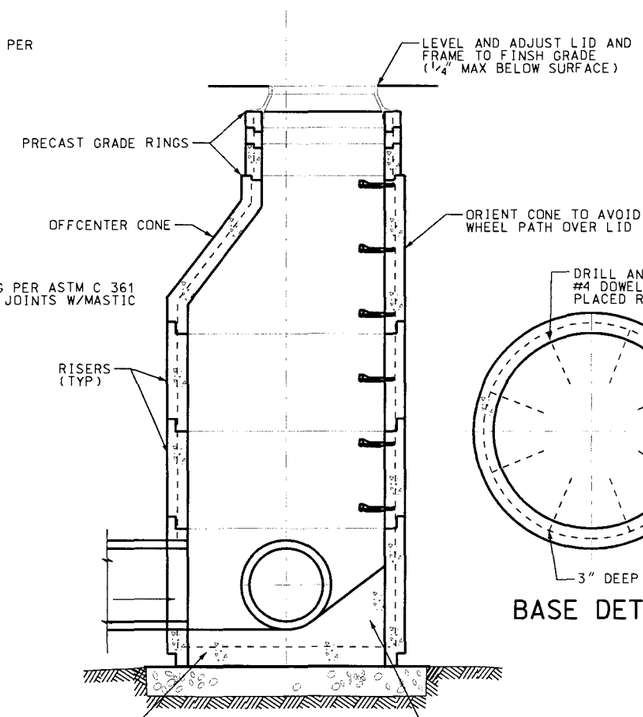


SECTION B-B

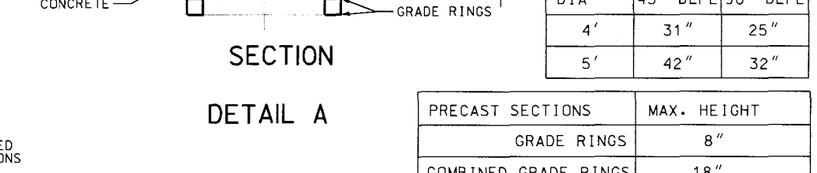


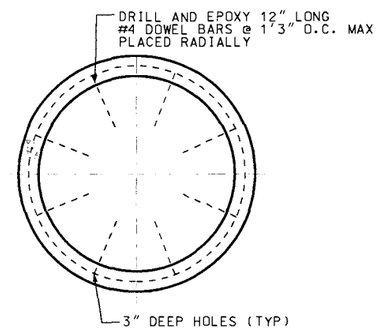


BASE DETAIL

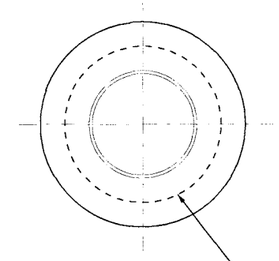


PLAN

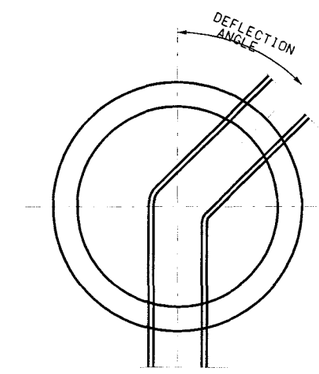


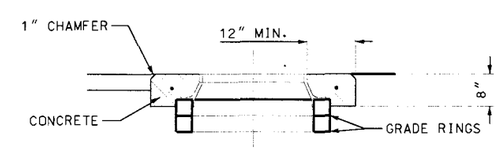


SECTION

DETAIL A

## NOTES:

1. USE 3",4",6", OR 8" HIGH GRADE RINGS.
2. USE SECTIONS 1'-0", 1'-6", 2'-0", 3'-0" OR 4'-0" HIGH.
3. IF THE REQUIRED RAISE IS MORE THAN 1'-0", REMOVE THE CONE AND ADD RISER RINGS TO THE RISER SECTION. COMPACT BACKFILL TO A MINIMUM OF 90% DENSITY AND REPLACE THE ROADWAY SURFACING IN KIND.
4. PREVENT DEBRIS FROM FALLING INTO THE MANHOLE DURING CONSTRUCTION. CLEAN AND REMOVE ANY DEBRIS IN THE MANHOLE AND CONNECTING PIPES.
5. REPAIR ANY DAMAGE OR REPLACE DAMAGED MANHOLES TO THE SATISFACTION OF THE ENGINEER AT NO ADDITIONAL COST TO THE DEPARTMENT.
6. USE COATED DEFORMED BILLET REINFORCING STEEL BARS CONFORMING TO AASHTO M 284 OR M 111 AND M 31 GRADE 60 RESPECTIVELY.
7. FOR LID AND FRAME SEE STD DWG GF 2.
8. USE CLASS AA (AE) CONCRETE.
9. USE TYPE II CEMENT (LOW ALKALI).
10. PROVIDE 2" CONCRETE COVER TO REINFORCING STEEL.
11. PROVIDE HYDRAULIC CEMENT MORTAR ACCORDING TO ASTM C 185 AND PRECAST MANHOLE SECTIONS PER ASTM C 478.
12. PLACE STEPS BEGINNING 2' BELOW FINSHED GRADE AS PER STD DWG GF 6.
13. SUBMIT DESIGN FOR MANHOLES GREATER THAN 5' IN DIAMETER OR DEEPER THAN 18' TO ENGINEER FOR APPROVAL.
14. DO NOT OVEREXCAVATE. PLACE 6" MIN. UTBC BEDDING ACCORDING TO SECTION 02721 ON FIRM SUBGRADE. DO NOT USE CRUSHED ROCK IN ACTIVE WATERTABLE WITHOUT APPROVAL OF THE ENGINEER.

## DESIGN DATA

HS 20 OR INTERSTATE ALTERNATE LOADING IN ACCORDANCE WITH AASHTO 17th EDITION SPECIFICATIONS.

STRUCTURAL STEEL: Fy = 36,000 psi

STRUCTURAL CONCRETE: f'c = 4,000 psi
fy = 60,000 psi
n = 8

| | MAX. PIPE O.D. | |
|---|---|---|
| DIA | 45° DEFL | 90° DEFL |
| 4' | 31" | 25" |
| 5' | 42" | 32" |

| PRECAST SECTIONS | MAX. HEIGHT |
|---|---|
| GRADE RINGS | 8" |
| COMBINED GRADE RINGS | 18" |
| CONES | 36" |
| RISERS | 48" |

REVISIONS

| NO. | DATE | APPR. | REMARKS |
|---|---|---|---|
| | | | |

UTAH DEPARTMENT OF TRANSPORTATION
STANDARD DRAWINGS FOR ROAD AND BRIDGE CONSTRUCTION
SALT LAKE CITY, UTAH

RECOMMENDED FOR APPROVAL — JAN.01,2005 DATE
CHAIRMAN STANDARDS COMMITTEE APPROVED — JAN.01,2005 DATE
DEPUTY DIRECTOR

STANDARD MANHOLE

STD DWG
CB 11

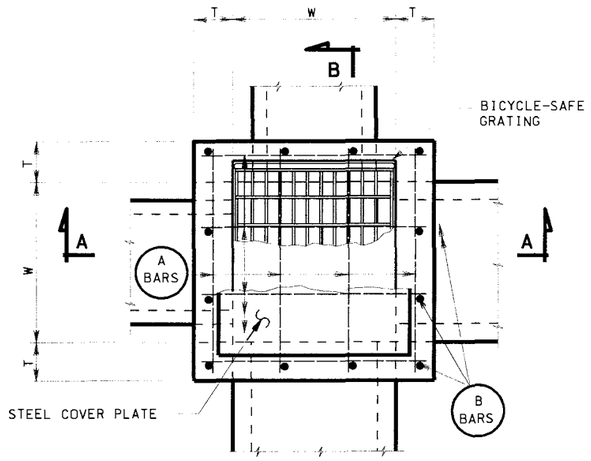


PLAN

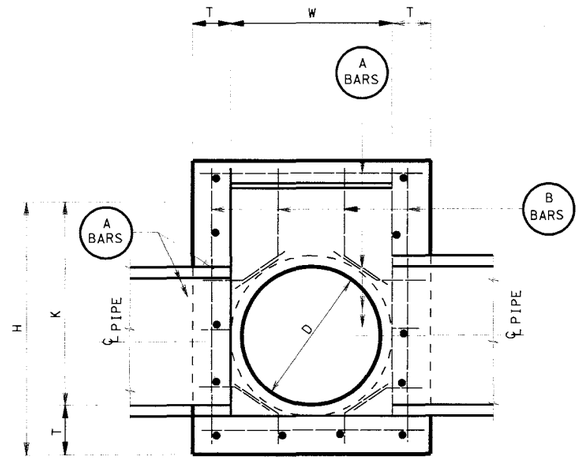


SECTION A-A

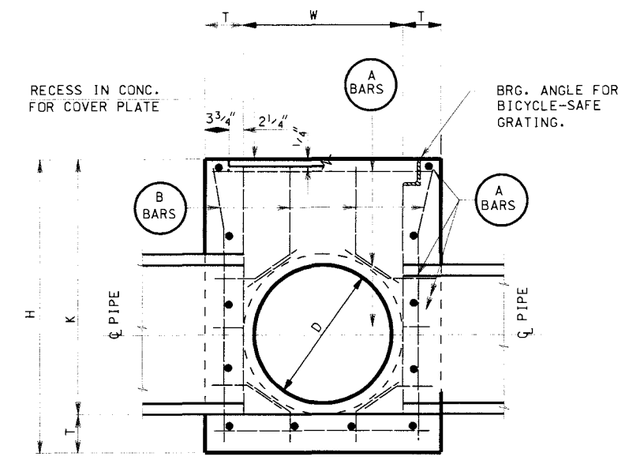


SECTION B-B

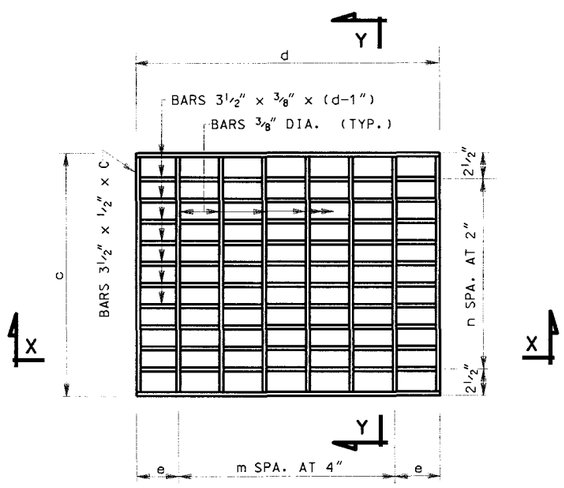


PLAN ( GRATING )

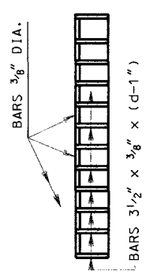


SECTION Y-Y

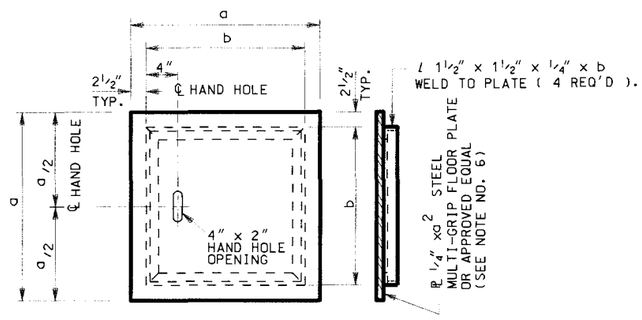


STEEL COVER PLATE DETAILS

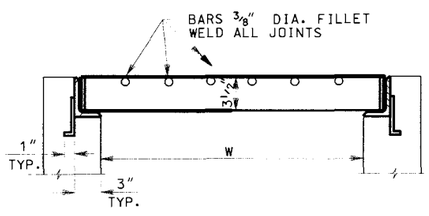


SECTION X-X

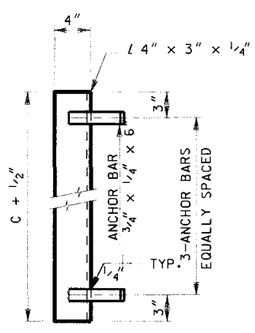


BICYCLE-SAFE GRATING

## GENERAL NOTES FOR DB 1A TO DB 3C

1. USE COATED DEFORMED BILLET STEEL BARS CONFORMING TO AASHTO M 284 OR M 111 AND M 31 GRADE 60, RESPECTIVELY.
2. USE STRUCTURAL STEEL CONFORMING TO AASHTO M 270 GRADE 36 EXCEPT WHERE NOTED OTHERWISE.
3. HOT-DIP GALVANIZE THE GRATING AND FRAME AFTER FABRICATION IN ACCORDANCE WITH AASHTO M 111.
4. TYPE II CEMENT (LOW ALKALI), STRUCTURAL CONCRETE REQUIRED.
5. PIPES AND BOX TO BE ARRANGED TO SUIT CONDITIONS. CUT AND BEND BARS WHERE NECESSARY TO CLEAR PIPE. ALL BARS TO BE #5 AT 12" PLUS OR MINUS.
6. COVER PLATE ALTERNATE FOR GRATING. COVER PLATE IS NOT DESIGNED FOR WHEEL LOAD. (SEE STD DWG CB 4 FOR SOLID COVER FOR HS 20-44 LOADING).
7. DEDUCT CONCRETE DISPLACED BY PIPE(S) FROM THOSE CONCRETE QUANTITIES GIVEN IN SCHEDULE NO. 1.

## DESIGN DATA

HS 20-44 OR INTERSTATE ALTERNATE LOADING IN ACCORDANCE WITH CURRENT AASHTO AND INTERIM SPECIFICATIONS.

LIVE LOAD: HS 20-44
fc = 1,400 psi
fs = 24,000 psi (REINFORCING STEEL)
fs = 20,000 psi (STRUCTURAL STEEL)
n = 8

## DIMENSIONS & QUANTITIES

(SEE SCHEDULES ON STD DWG DB 1D)

| NO. | DATE | APPR. | REMARKS |
|---|---|---|---|
| | | | |

REVISIONS

UTAH DEPARTMENT OF TRANSPORTATION
STANDARD DRAWINGS FOR ROAD AND BRIDGE CONSTRUCTION
SALT LAKE CITY, UTAH

RECOMMENDED FOR APPROVAL — JAN.01.2005 DATE
CHAIRMAN STANDARDS COMMITTEE
APPROVED — JAN.01.2005 DATE
DEPUTY DIRECTOR

STANDARD DIVERSION BOX/COVER PLATE/ GRATING FOR 18" DIA. OR 24" DIA.PIPE

STANDARD DRAWING TITLE

STD DWG
DB 1A

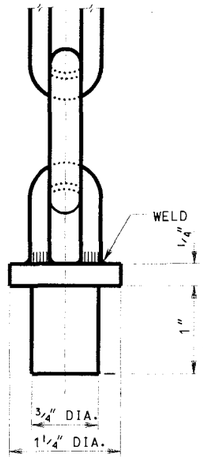


SET BOLT DETAIL

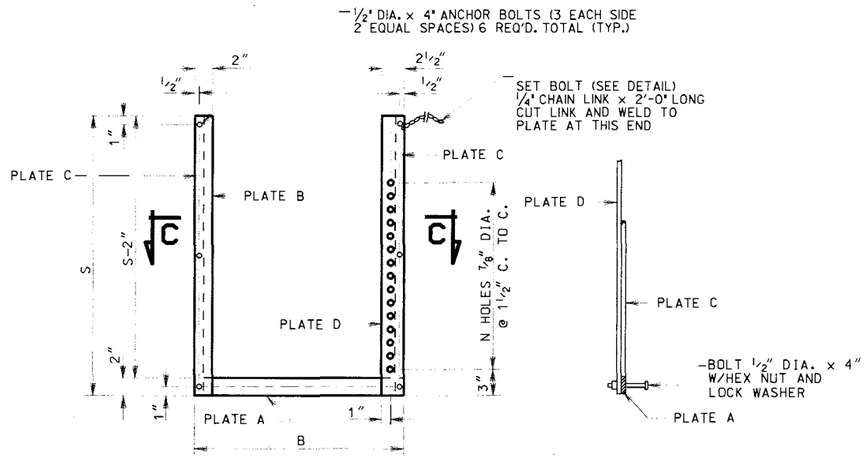


FRAME DETAILS

## SCHEDULE NO. 1

| LINE | DIMENSIONS H | K | W | T | X | REINFORCING STEEL A-BARS LENGTH | A-BARS NO. | B-BARS LENGTH | B-BARS NO. | QUANTITIES REINF. STEEL LB. | CONC. CU. YD. | STRUCTURAL STEEL GRATING LBS. | COVER PLATE LBS. | FRAME LBS. | GATE LBS. |
|---|---|---|---|---|---|---|---|---|---|---|---|---|---|---|---|
| 1 | 2'-6 | 2'-0 | 2'-0 | 6" | 0 | 2'-8 | 12 | 2'-1 | 12 | 59 | .525 | 177 | 80 | 18 | 26 |
| 2 | 3'-0 | 2'-6 | ↑ | ↑ | 6" | ↑ | 16 | 2'-7 | ↑ | 77 | .617 | ↑ | ↑ | ↑ | ↑ |
| 3 | 3'-6 | 3'-0 | | | 1'-0 | | 16 | 3'-1 | | 83 | .710 | | | | |
| 4 | 4'-0 | 3'-6 | | | 1'-6 | | 20 | 3'-7 | | 100 | .802 | | | | |
| 5 | 4'-6 | 4'-0 | | | 2'-0 | | 20 | 4'-1 | | 107 | .895 | | | | |
| 6 | 5'-0 | 4'-6 | | | 2'-6 | | 24 | 4'-7 | | 124 | .988 | | | | |
| 7 | 5'-6 | 5'-0 | | | 3'-0 | | 24 | 5'-1 | | 130 | 1.080 | | | | |
| 8 | 6'-0 | 5'-6 | | | 3'-6 | | 28 | 5'-7 | | 148 | 1.173 | | | | |
| 9 | 6'-6 | 6'-0 | ↓ | ↓ | 4'-0 | ↓ | 28 | 6'-1 | ↓ | 154 | 1.265 | ↓ | ↓ | ↓ | ↓ |
| 10 | 7'-0 | 6'-6 | 2'-0 | 6" | 4'-6 | 2'-8 | 32 | 6'-7 | 12 | 171 | 1.358 | 177 | 80 | 18 | 26 |
| 11 | 3'-0 | 2'-6 | 2'-6 | 6" | 0 | 3'-2 | 16 | 2'-7 | 12 | 85 | .770 | 254 | 114 | 21 | 41 |
| 12 | 3'-6 | 3'-0 | ↑ | ↑ | 6" | ↑ | 16 | 3'-1 | ↑ | 91 | .878 | ↑ | ↑ | ↑ | ↑ |
| 13 | 4'-0 | 3'-6 | | | 1'-0 | | 20 | 3'-7 | | 111 | .989 | | | | |
| 14 | 4'-6 | 4'-0 | | | 1'-6 | | 20 | 4'-1 | | 117 | 1.100 | | | | |
| 15 | 5'-0 | 4'-6 | | | 2'-0 | | 24 | 4'-7 | | 137 | 1.211 | | | | |
| 16 | 5'-6 | 5'-0 | | | 2'-6 | | 24 | 5'-1 | | 143 | 1.323 | | | | |
| 17 | 6'-0 | 5'-6 | | | 3'-0 | | 28 | 5'-7 | | 162 | 1.434 | | | | |
| 18 | 6'-6 | 6'-0 | | | 3'-6 | | 28 | 6'-1 | | 169 | 1.545 | | | | |
| 19 | 7'-0 | 6'-6 | ↓ | ↓ | 4'-0 | ↓ | 32 | 6'-7 | ↓ | 188 | 1.656 | ↓ | ↓ | ↓ | ↓ |
| 20 | 7'-6 | 7'-0 | 2'-6 | 6" | 4'-6 | 3'-2 | 32 | 7'-1 | 12 | 194 | 1.767 | 254 | 114 | 21 | 41 |

## SCHEDULE NO. 2

| PIPE SIZE D | COVER PLATE a | b | BICYCLE-SAFE GRATING c | d | e | m | n | FRAME AND GATE B | S | N | 1-PL. A | 1-PL. B | 2-PL. C | 1-PL. D | GATE |
|---|---|---|---|---|---|---|---|---|---|---|---|---|---|---|---|
| 18" | 2'-4 | 1'-11 | 1'-11 | 2'-4 1/2 | 4 1/4" | 5 | 9 | 1'-11 | 2'-0 | 12 | 1/4"x2"x1'-11 | 1/4"x2"x2'-0 | 1/4"x1"x1'-10 | 1/4"x2 1/2"x2'-0 | 3/16"x20 1/2"x1'-10 |
| 24" | 2'-10 | 2'-5 | 2'-5 | 2'-10 1/2 | 5 1/4" | 6 | 12 | 2'-5 | 2'-6 | 15 | 1/4"x2"x2'-5 | 1/4"x2"x2'-6 | 1/4"x1"x2'-4 | 1/4"x2 1/2"x2'-6 | 3/16"x26 1/2"x2'-4 |

SEE NOTE 4

SEE NOTE 5

| D | a |
|---|---|
| 18" | 1'-11 1/2 |
| 24" | 2'-5 1/2 |

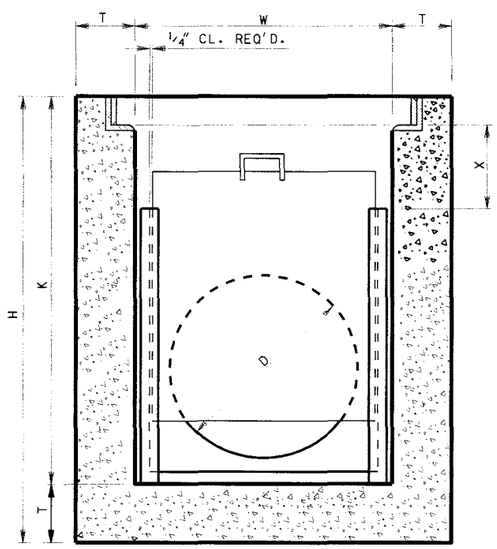


FRAME AND GATE INSTALLATION DETAIL

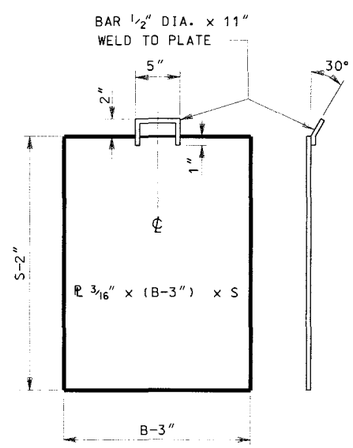


GATE

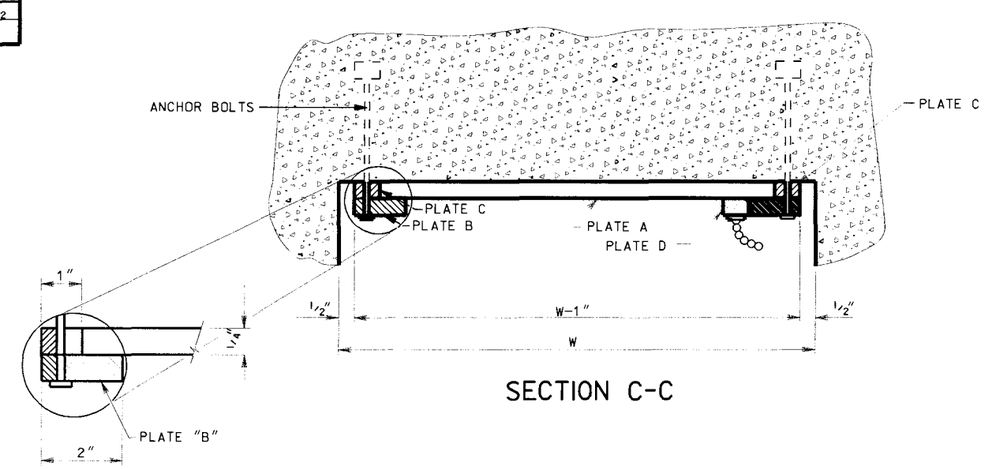


SECTION C-C

**NOTES:**

1. CALCULATIONS OF CONCRETE QUANTITIES ARE FOR BOXES WITH BICYCLE-SAFE GRATING AND NO OPENINGS FOR PIPE(S).
2. FOR SOLID COVER ADD .011 CU. YD. OF CONCRETE IN LINES 1 THRU 10 INCLUSIVE AND .014 CU. YD. OF CONCRETE IN LINES 11 THRU 20 INCLUSIVE AND DEDUCT .053 CU. YD. OF CONCRETE FOR EACH 18" DIA. PIPE IN LINES 1 THRU 10 INCLUSIVE AND .091 CU. YD. OF CONCRETE FOR EACH 24" DIA. PIPE IN LINES 11 THRU 20 INCLUSIVE.
3. IF DIMENSION X IS LESS THAN INSIDE PIPE DIAMETER D, THE GATE(S) CAN ONLY BE PARTIALLY OPENED TO ALLOW THE GRATING OR COVER PLATE TO BE REPLACED.
4. SEE STD DWG CB 4 FOR SOLID COVER PLATE DETAILS.
5. SEE STD DWG DB 1B FOR HINGED LID DETAILS.

REVISIONS

| NO. | DATE | APPR. | REMARKS |
|---|---|---|---|
| | | | |

UTAH DEPARTMENT OF TRANSPORTATION
STANDARD DRAWINGS FOR ROAD AND BRIDGE CONSTRUCTION
SALT LAKE CITY, UTAH

RECOMMENDED FOR APPROVAL — JAN.01,2005 DATE
CHAIRMAN STANDARDS COMMITTEE APPROVED — JAN.01,2005 DATE
DEPUTY DIRECTOR

STANDARD DIVERSION BOX THREE GATE BOX SECTIONS FOR 18" DIA. OR 24" DIA. PIPE

STANDARD DRAWING TITLE

STD DWG
DB 1D

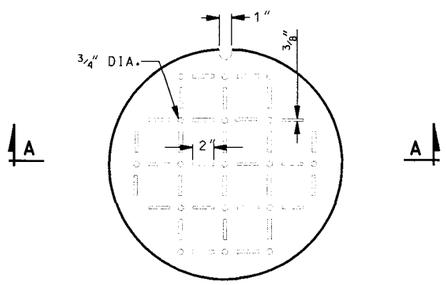


SOLID COVER PLAN

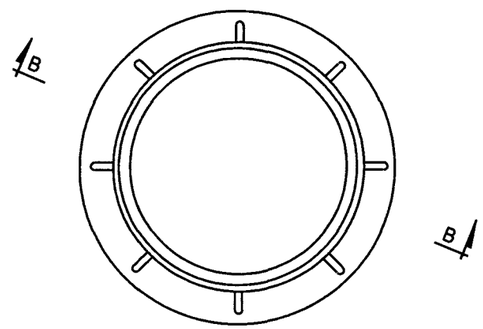


FRAME PLAN

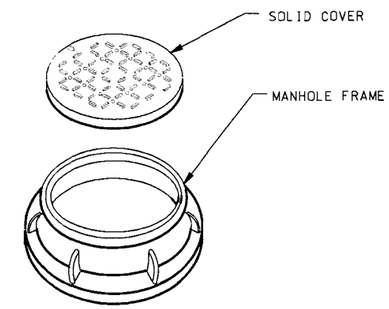


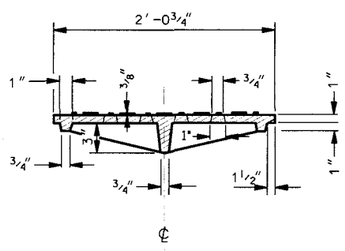


SECTION A-A

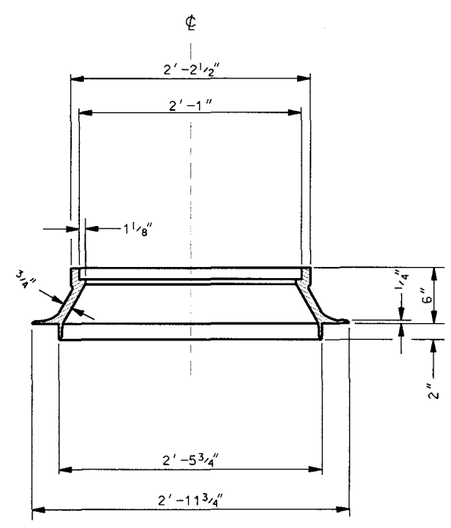


SECTION B-B

## NOTES:

1. FURNISH MANHOLE FRAME AND COVER IN CAST GRAY IRON CONFORMING WITH AASHTO DESIGNATION M 105, CLASS 30B.
2. USE PRECAST CONCRETE GRADE RINGS TO ACHIEVE FINISH GRADE ELEVATION. PRECAST GRADE RING ARE FURNISHED IN HEIGHTS OF 4", 6" AND 8". TOTAL HEIGHT OF GRADE RINGS NOT TO EXCEED 1'-0". ALL PRECAST GRADE RINGS CONFORM WITH AASHTO DESIGNATION M 199.
3. ESTIMATED WEIGHT OF FRAME AND COVER 402 LBS.

## DESIGN DATA

MS-18 (HS-20) OR INTERSTATE ALTERNATE LOADING IN accordance WITH CURRENT AASHTO AND INTERIM SPECIFICATIONS.

REVISIONS

| NO. | DATE | APPR. | REMARKS |
|---|---|---|---|
| | | | |

UTAH DEPARTMENT OF TRANSPORTATION
STANDARD DRAWINGS FOR ROAD AND BRIDGE CONSTRUCTION
SALT LAKE CITY, UTAH

RECOMMENDED FOR APPROVAL — JAN.01.2005 DATE
CHAIRMAN STANDARDS COMMITTEE APPROVED — JAN.01.2005 DATE
DEPUTY DIRECTOR

MANHOLE FRAME AND SOLID COVER
STANDARD DRAWING TITLE

STD DWG
GF 2

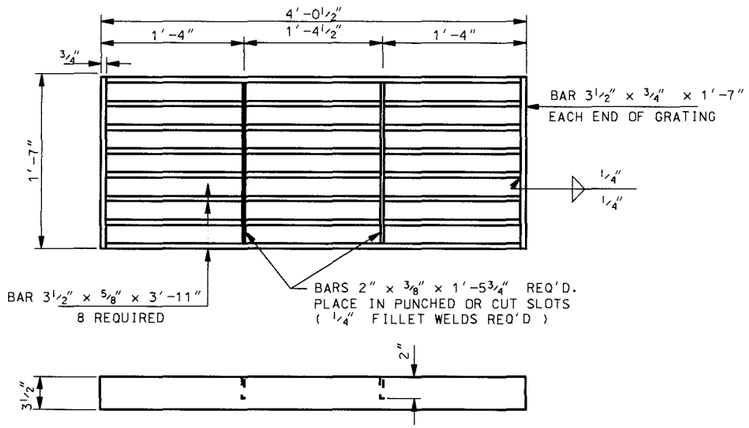


## STANDARD GRATING

GRATE WEIGHT: 272 LBS

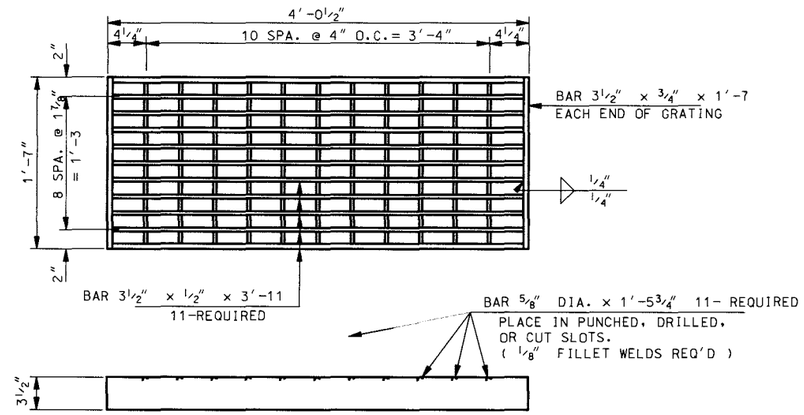


## BICYCLE-SAFE GRATING

GRATE WEIGHT: 297 LBS

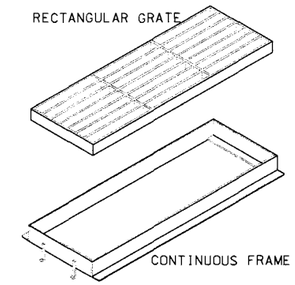


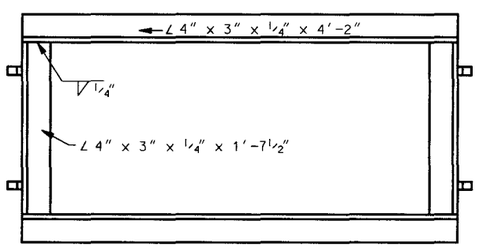


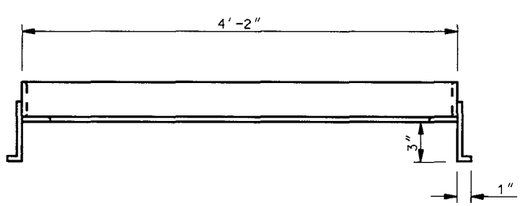


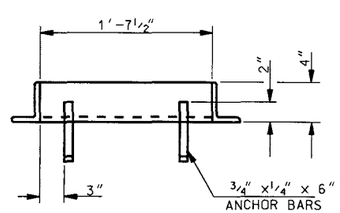


## FRAME

FRAME WEIGHT: 68 LBS

## NOTES:

1. HOT-DIP GALVANIZE GRATING AND FRAME AFTER FABRICATION IN ACCORDANCE WITH AASHTO DESIGNATION M 111 (ASTM A 123).
2. STRUCTURAL STEEL GRATING: USE STRUCTURAL CARBON STEEL CONFORMING TO AASHTO DESIGNATION M 270, GRADE 36 (ASTM A 709 GRADE 36).
3. SEE ROADWAY PLANS FOR TYPE OF GRATE REQUIRED.
4. ALL JOINTS REQUIRE 1/4" FILLET WELDS UNLESS NOTED OTHERWISE.

## DESIGN DATA

MS 18 ( HS-20 ) OR INTERSTATE ALTERNATE LOADING IN ACCORDANCE WITH CURRENT ASSHTO AND INTERIM SPECIFICATIONS.

STRUCTURAL STEEL: fs = 20,000 psi

REVISIONS

| NO. | DATE | APPR. | REMARKS |
|---|---|---|---|
| | | | |

UTAH DEPARTMENT OF TRANSPORTATION
STANDARD DRAWINGS FOR ROAD AND BRIDGE CONSTRUCTION
SALT LAKE CITY, UTAH

RECOMMENDED FOR APPROVAL — JAN.01,2005 DATE
CHAIRMAN STANDARDS COMMITTEE APPROVED — JAN.01,2005 DATE
DEPUTY DIRECTOR

RECTANGULAR GRATE AND FRAME

STANDARD DRAWING TITLE

STD DWG
GF 3

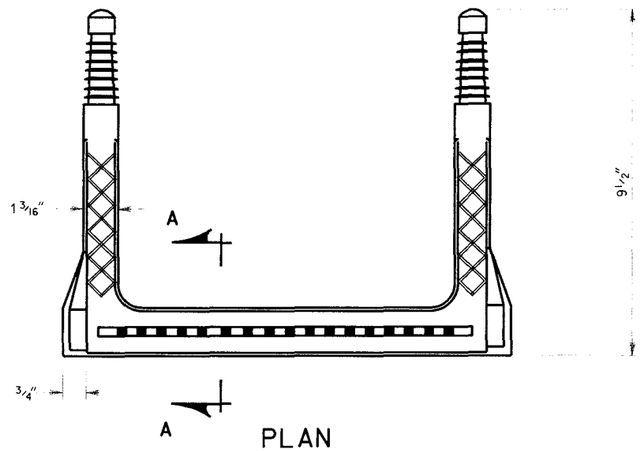


PLAN

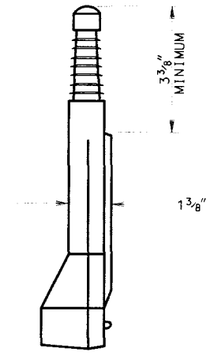


RIGHT SIDE VIEW

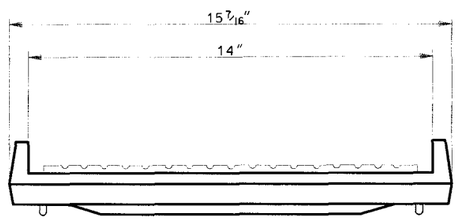


END VIEW

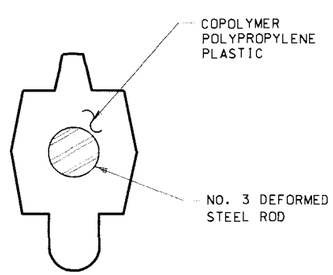


SECTION A-A

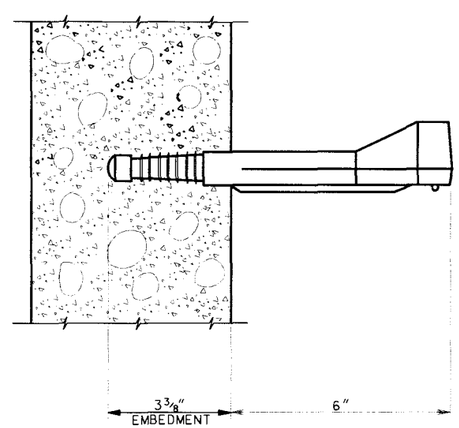


EMBEDMENT DETAIL

## NOTES:

1. MANHOLE STEPS: CAPABLE OF WITHSTANDING A SINGLE CONCENTRATED LOAD OF 300 POUNDS APPLIED AT A DISTANCE OF 5 INCHES FROM THE FACE OF THE STRUCTURE WALL.
2. STEPS ARE TO BE VERTICALLY ALIGNED AND UNIFORMLY SPACED WITH A MINIMUM SPACING OF 12 INCHES AND A MAXIMUM SPACING OF 16 INCHES UNLESS SHOWN OTHERWISE ON STRUCTURE PLANS.
3. USE EITHER MANHOLE STEPS CAST-IN-PLACE, OR GROUTED INTO STRUCTURE WALL IN SUCH A MANNER AS TO PREVENT PULLOUT UNDER A LOAD OF 300 POUNDS APPLIED 5 INCHES FROM THE FACE OF THE STRUCTURE WALL.
4. STEEL REINFORCING OF MANHOLE STEPS: CONFORM TO AASHTO DESIGNATION M 31, GRADE 60, DEFORMED STEEL BAR. PLASTIC COATING OF MANHOLE STEPS: CONFORM TO ASTM DESIGNATION D 2146, TYPE II, GRADE 16906.
5. MANHOLE STEPS: CONFORM TO AASHTO DESIGNATION M 199 UNLESS NOTED OTHERWISE.
6. DIMENSIONS MAY VARY WITH MANUFACTURES DESIGN. USE ALTERNATIVE DESIGN WITH THE APPROVAL OF THE ENGINEER.

REVISIONS

| NO. | DATE | APPR. | REMARKS |
|---|---|---|---|
| | | | |

UTAH DEPARTMENT OF TRANSPORTATION
STANDARD DRAWINGS FOR ROAD AND BRIDGE CONSTRUCTION
SALT LAKE CITY, UTAH

RECOMMENDED FOR APPROVAL — JAN.01.2005 DATE
CHAIRMAN STANDARDS COMMITTEE APPROVED — JAN.01.2005 DATE
DEPUTY DIRECTOR

MANHOLE STEPS
STANDARD DRAWING TITLE

STD DWG
GF 6

## STANDARD SCREW GATE SIZES FOR 5 FEET OF HEAD OR LESS

| A (INCH) | 12 | 15 | 18 | 21 | 24 | 30 | 36 | 42 | 48 | 54 | 60 | 72 |
|---|---|---|---|---|---|---|---|---|---|---|---|---|
| B (INCH) | 12 | 12 | 12 | 21 | 12 | 18 | 24 | 24 | 24 | 30 | 30 | 36 |
| | 15 | 15 | 18 | | 18 | 24 | 30 | 30 | 30 | 36 | 36 | 42 |
| | 18 | 18 | 24 | | 24 | 30 | 36 | 36 | 36 | 42 | 42 | 48 |
| | 24 | 24 | 30 | | 30 | 36 | 42 | 42 | 42 | 48 | 48 | 54 |
| | | 30 | 36 | | 36 | 42 | 48 | 48 | 48 | 54 | 54 | 60 |
| | | | | | 42 | 48 | 54 | 54 | 54 | 60 | 60 | 72 |
| | | | | | 48 | | 60 | 72 | 60 | 72 | 72 | |
| | | | | | | | | | 72 | | | |

* FRAME HEIGHTS ARE AVAILABLE IN 1 FOOT INCREMENTS UP TO 10 FEET.
* OPENING SIZE : A X B

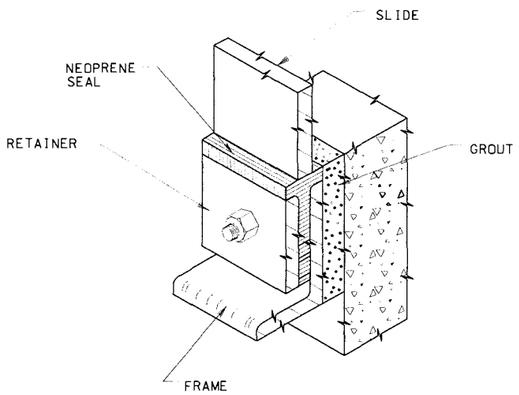


FLUSH BOTTOM CLOSURE

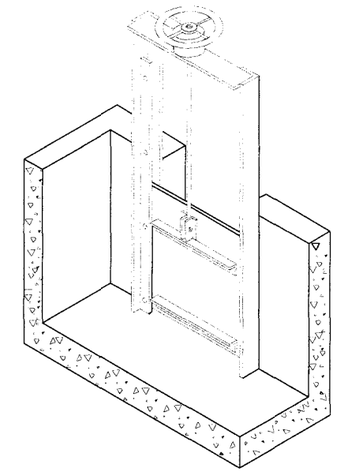

ISOMETRIC VIEW

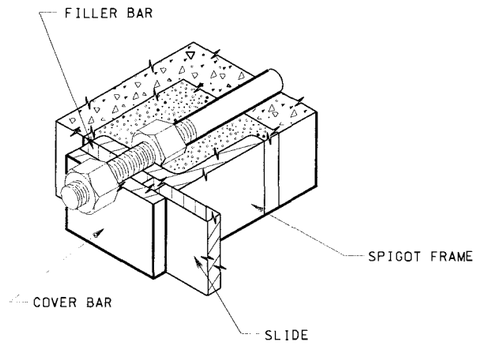


SPIGOT BACK MOUNTING

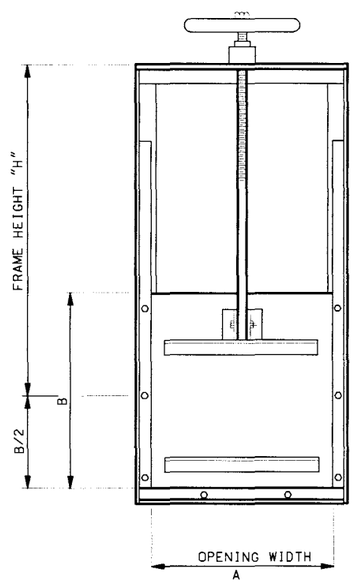


FRONT ELEVATION

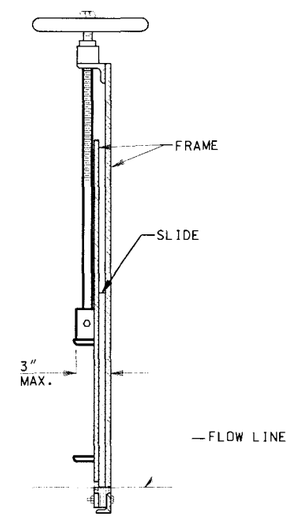


SECTION THRU

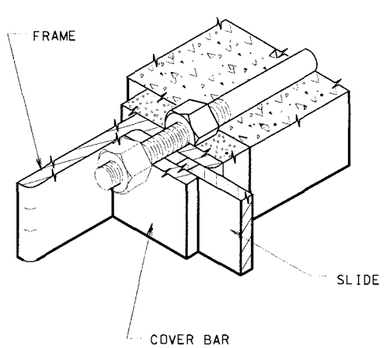


FLAT BACK MOUNTING

### NOTES:

1. DESIGN SCREW GATES AND FRAMES FOR A MINIMUM FACE PRESSURE EQUAL TO 5 FEET OF HEAD ABOVE THE GATE OPENING AND ZERO BACK PRESSURE. SCREW GATES ARE INTENDED FOR A MAXIMUM OPENING SIZE OF 6 FT.x 6 FT.
2. CONSTRUCT SCREW GATE AND FRAME WITH CARBON STEEL CONFORMING TO AASHTO DESIGNATION M 183, GRADE 36. OPTIONAL GALVANIZING IN ACCORDANCE WITH AASHTO SPECIFICATION M 111.
3. MOUNT FRAME USING EITHER FLAT BACK OR SPIGOT BACK DETAILS DEPENDING ON CONDITIONS.
4. SUBMIT, IN ALL CASES, SHOP DRAWINGS FOR APPROVAL. SIMILAR SCREW GATES AND FRAMES CAN BE USED SUBJECT TO THE APPROVAL OF SHOP DRAWINGS.
5. SEE MANUFACTURES DETAILS FOR FRAME SIZES, AND PLACEMENT OF MOUNTING BOLTS.

### DESIGN DATA

STRUCTURAL STEEL: fs = 20, 000 PSI
DESIGN SEATING HEAD : 0-5 FT.

REVISIONS

| NO. | DATE | APPR. | REMARKS |
|---|---|---|---|
| | | | |

UTAH DEPARTMENT OF TRANSPORTATION
STANDARD DRAWINGS FOR ROAD AND BRIDGE CONSTRUCTION
SALT LAKE CITY, UTAH

RECOMMENDED FOR APPROVAL — JAN.01,2005 DATE
CHAIRMAN STANDARDS COMMITTEE
APPROVED — JAN.01,2005 DATE
DEPUTY DIRECTOR

STANDARD SCREW GATE AND FRAME
STANDARD DRAWING TITLE

STD DWG
GF 7

# PacifiCorp

# Deer Creek Mine

# C/015/0018

**Amendment to Add a Post-Mining Water Discharge at Rilda Canyon Portals, Permit Area Change to Include Discharge Pipeline Route and Potential Treatment Facility Area, PacifiCorp, Deer Creek Mine, C/015/0018, Emery County, Utah**

**<u>Volume 11A, Appendix Volume, Engineering Appendix</u>**

**Add Appendix I**

# R645-301-500 ENGINEERING SECTION

## APPENDIX I

- **DESIGN DRAWINGS – DEER CREEK MINE WATER RELIEF PIPELINE 2016 – RILDA CANYON**

# PACIFICORP
# DEER CREEK MINE WATER RELIEF PIPELINE
## RILDA CANYON
## 2016

| PROJECT NO. | SHEET NO. |
|---|---|
| 1506-121 | 1 |

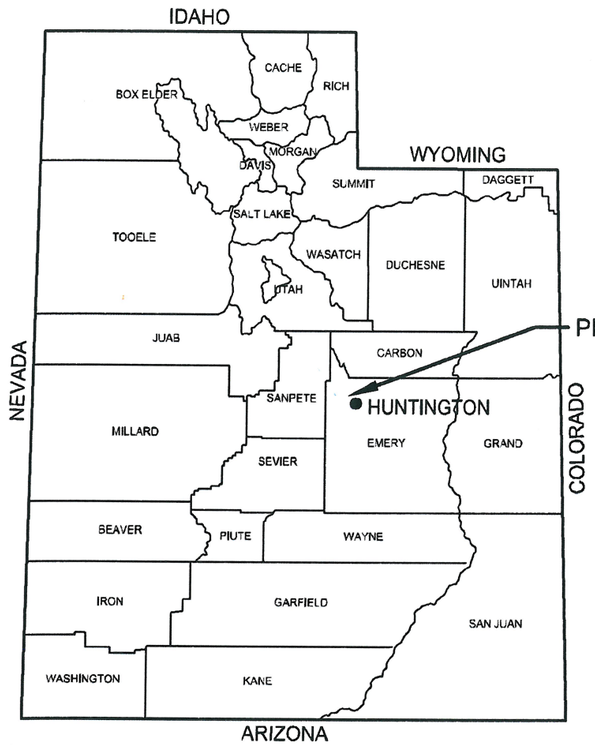


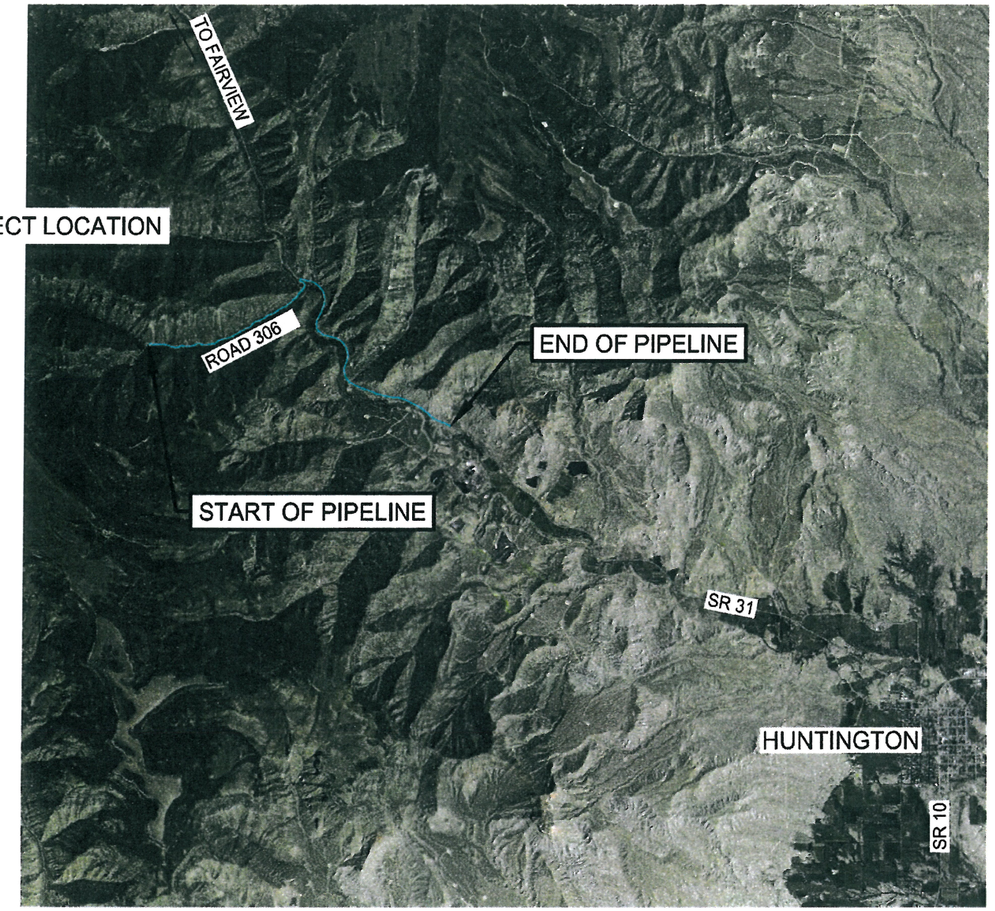


VICINITY MAP

## APPROVAL

RECOMMENDED FOR APPROVAL:

PROFESSIONAL ENGINEER No. 4857300-2202 COLLIN NOLAN FAWCETT STATE OF UTAH

ENGINEER — DATE 10/19/16

APPROVED:

STATE OF UTAH REFERENCE NUMBER 5234167-2250 CHARLES A. SEMBORSKI LICENSED PROFESSIONAL GEOLOGIST

PACIFICORP — DATE 10/20/16

Jones & DeMille Engineering, Inc.
CIVIL ENGINEERING - SURVEYING - TESTING
GIS - ENVIRONMENTAL
*- infrastructure professionals -*
1.800.748.5275 www.jonesanddemille.com

PACIFICORP

# INDEX TO SHEETS

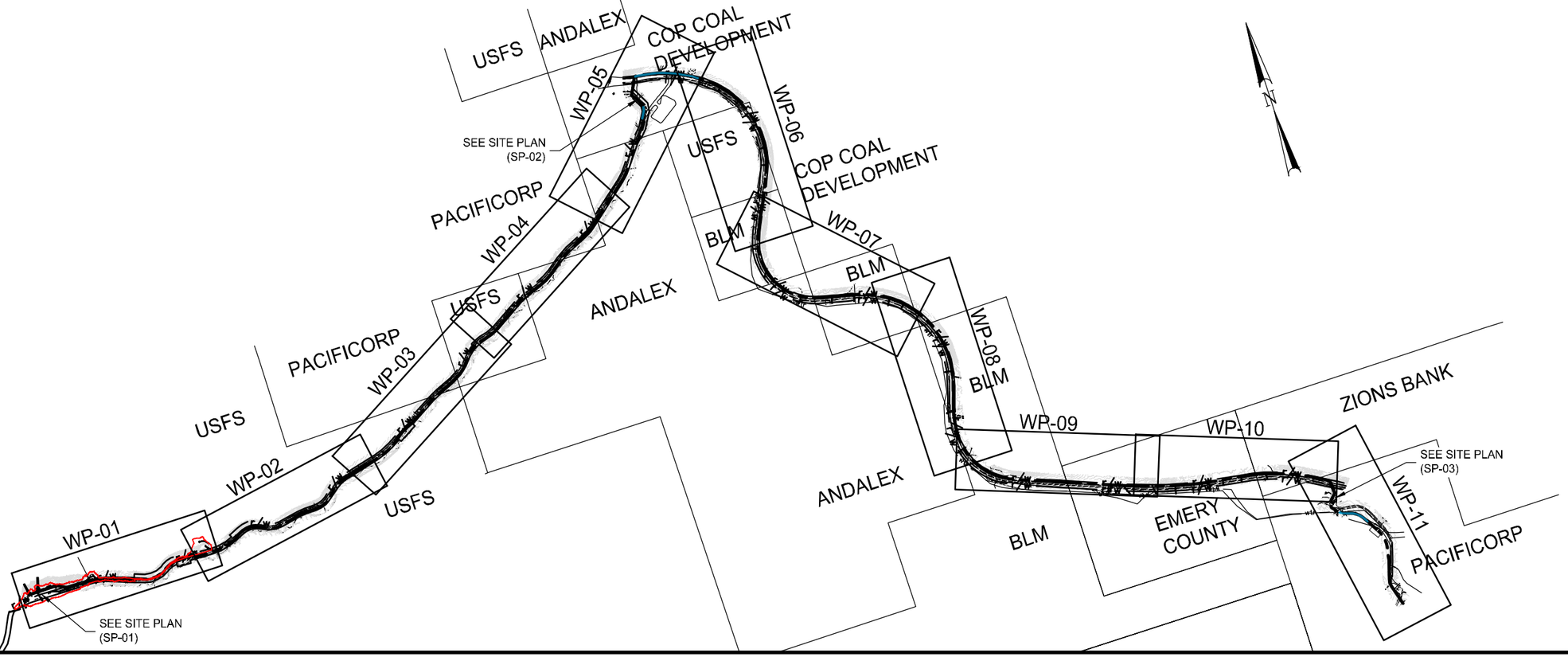


## INDEX

| SHEET NO. | DESCRIPTION |
|---|---|
| 1 | TITLE |
| 1A | INDEX TO SHEETS |
| 1B | LEGEND |
| DT-01 to DT-09 | DETAIL SHEETS |
| WP-01 to WP-11 | WATER PLAN & PROFILE SHEETS |
| SP-01 to SP-03 | SITE PLAN SHEETS |

| NO. | DATE | DESIGN REV. BY | MAPS CORR. BY | PARCELS AFFECTED | REQUES'D BY | REMARKS |
|---|---|---|---|---|---|---|
| | | ORIGINAL SUBMISSION FOR AUTHORIZATION | | | | |

REVISIONS

SCALE: NTS

DWG NAME: TITLE_PPE
SHT SET: 1505-121P

DWG CREATED: 2015/10/06
PEN TBL: 1sinch42x28x0.ctb

UPDATED: 11/4/2016
PLOTTED: 11/4/2016

Jones & DeMille Engineering, Inc.
CIVIL ENGINEERING - SURVEYING - TESTING
GIS - ENVIRONMENTAL
1.800.748.5275 www.jonesandDemille.com

DESIGN: DRAWN: TT QUANT: 16-08 CHECK: CHECK: CHECK: REVIEW DATE: BY:

APPROVAL RECOMM. DATE PROJECT DESIGN ENGINEER
APPROVED. DATE

PACIFICORP

DEER CRK MINE WTR RELIEF PIPE

INDEX TO SHEETS

PROJECT NUMBER: 1506-121

EMERY COUNTY

SHEET NO. 1A

# LEGEND

## EXISTING FEATURES

- SANITARY SEWER LINE
- SANITARY SEWER MANHOLE
- CULINARY WATER LINE
- CULINARY WATER VALVE
- BURIED POWER LINE
- OVERHEAD POWER LINE
- BURIED TELEPHONE LINE
- OVERHEAD TELEPHONE LINE
- BURIED CABLE TV LINE
- OVERHEAD CABLE TV LINE
- FIBER OPTIC LINE
- NATURAL GAS LINE
- IRRIGATION LINE
- STORM DRAIN
- FENCE LINE (BARBED OR STOCKTIGHT)
- FENCE LINE (CHAIN LINK)
- DRAINAGE CULVERT
- CONCRETE SURFACING (SIDEWALK, CURB, GUTTER, ETC.)
- FLOW LINE OF DITCH
- EDGE OF ASPHALT SURFACING
- EDGE OF GRAVEL SURFACING
- EDGE OF DIRT SURFACING
- FIRE HYDRANT
- WATER METER
- STRUCTURE
- POWER POLE & GUY WIRE
- TREE
- DELINEATOR POST
- STREET SIGN
- TELEPHONE PEDESTAL
- MAILBOX
- SURVEY MARKER

## MISC. FEATURES

- SUBDIVISION BOUNDARY LINE
- LOT LINES
- EXISTING RIGHT OF WAY LINE
- EXISTING N/A LINE
- EXISTING CITY BLOCK LINES (BLOCK LINE)
- PROPOSED RIGHT-OF-WAY LINE
- SECTION LINE
- QUARTER SECTION LINE
- (P.U.E.) PUBLIC UTILITY EASEMENT
- DEED LINE
- PROPERTY LINE

## ABBREVIATIONS

| | | | |
|---|---|---|---|
| TBC | TOP BACK OF CURB | EPP | POWER POLE |
| FLG | FLOW LINE OF GUTTER | SMH | SEWER MANHOLE |
| LOC | LIP OF CURB | CMH | COMMUNICATION MANHOLE |
| TSW | TOP OF SIDEWALK | R/W | RIGHT-OF-WAY |
| TOC | TOP OF CONCRETE | T.C.E. | TEMPORARY CONSTRUCTION EASEMENT |
| EOA | EDGE OF ASPHALT | | |
| TOA | TOP OF ASPHALT | P.U.E. | PUBLIC UTILITY EASEMENT |
| TOG | TOP OF GRATE | | |
| FLC | FLOW LINE OF CULVERT | STA | STATION |
| SW | SIDEWALK | L / LT | LEFT |
| FG | FINISHED GROUND | R / RT | RIGHT |

## PROPOSED FEATURES

- SANITARY SEWER LINE
- SANITARY SEWER MANHOLE
- SANITARY SEWER SERVICE
- CULINARY WATER LINE
- CULINARY WATER VALVE
- BURIED POWER LINE
- OVERHEAD POWER LINE
- BURIED TELEPHONE LINE
- OVERHEAD TELEPHONE LINE
- BURIED CABLE TV LINE
- OVERHEAD CABLE TV LINE
- FIBER OPTIC LINE
- NATURAL GAS LINE
- IRRIGATION LINE
- STORM DRAIN
- FENCE LINE (BARBED OR STOCKTIGHT)
- FENCE LINE (CHAIN LINK)
- DRAINAGE CULVERT
- EDGE OF ASPHALT
- EDGE OF CONCRETE
- FIRE HYDRANT
- CULINARY WATER METER
- DELINEATOR POST
- STREET SIGN
- POWER POLE
- MAILBOX
- CONCRETE SURFACING
- ASPHALT SURFACING
- TOP OF CUT LIMITS
- TOE OF FILL LIMITS
- DIRECTIONAL BORING AREA
- SENSITIVE AREA NEWUSSD
- PARALLEL AREAS WITH EXISTING CULINARY WATER PIPELINES
- DEER CREEK MINE DISTURBED LIMIT BOUNDARY

| NO. | DATE | DESIGN REV. BY | MAPS CORR. BY | PARCELS REQUIES BY | REMARKS |
|---|---|---|---|---|---|
| | | ORIGINAL SUBMISSION FOR AUTHORIZATION | | | |

REVISIONS

SCALE: NTS

DWG NAME: TITLE_PPE
SHT SET: 1506-121P

DWG CREATED: 2015/10/06
PEN TBL: 1sinch42x2800.ctb

UPDATED: 11/4/2016
PLOTTED: 11/4/2016


Jones & DeMille Engineering, Inc.
CIVIL ENGINEERING - SURVEYING - TESTING
GIS - ENVIRONMENTAL
1.800.748.5275 www.jonesandmille.com


REVIEW
DATE: -
BY: -

DESIGN: TT
DRAWN: 16-08
QUANT:
CHECK:
CHECK:
CHECK:

APPROVAL RECOMM: DATE
PROJECT DESIGN ENGINEER
APPROVED: DATE

PACIFICORP
DEER CRK MINE WTR RELIEF PIPE
LEGEND
PROJECT NUMBER: 1506-121

EMERY
COUNTY

SHEET NO. 1B

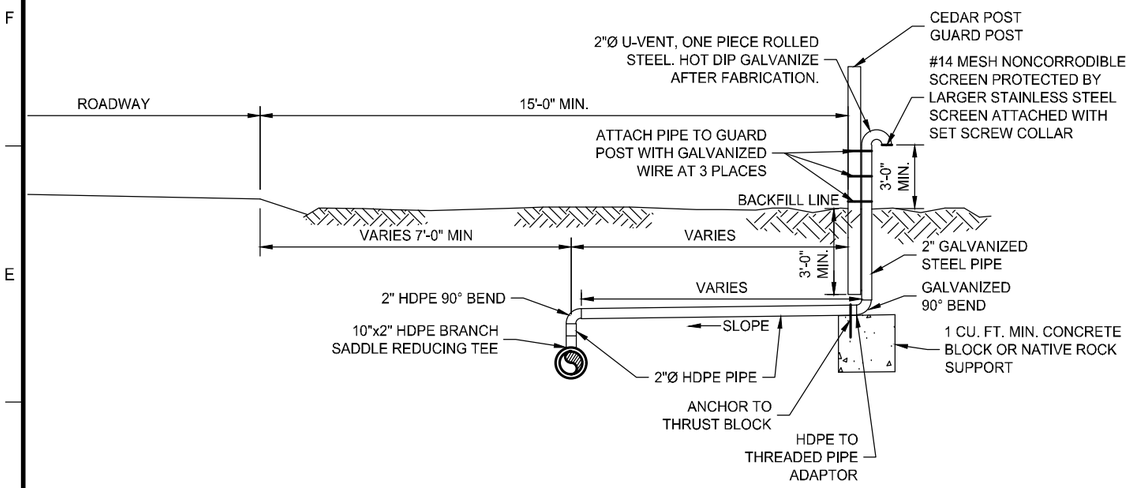


| D1 | ROADWAY INSTALLATION - GOOSENECK AIR VENT DETAIL |
|---|---|
| NTS | |

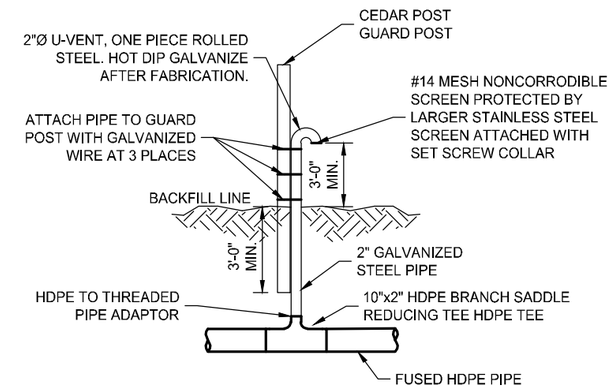


| D5 | STANDARD INSTALLATION - GOOSENECK AIR VENT DETAIL |
|---|---|
| NTS | |

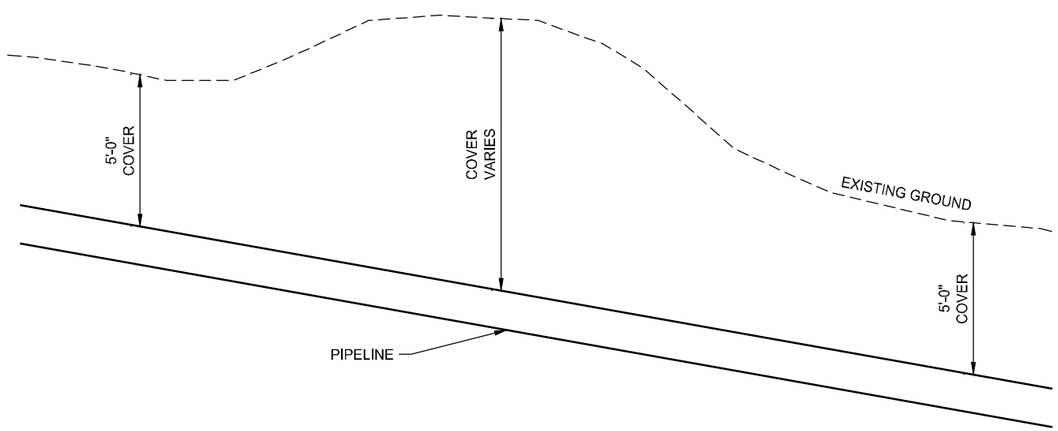


NOTE:
PIPE GRADE TO BE MAINTAINED THROUGH ALL HIGH SPOTS SHOWN ON PLAN SHEETS AND AT LOCATIONS ENCOUNTERED DURING CONSTRUCTION.

| A1 | PIPE GRADE DETAIL |
|---|---|
| NTS | |

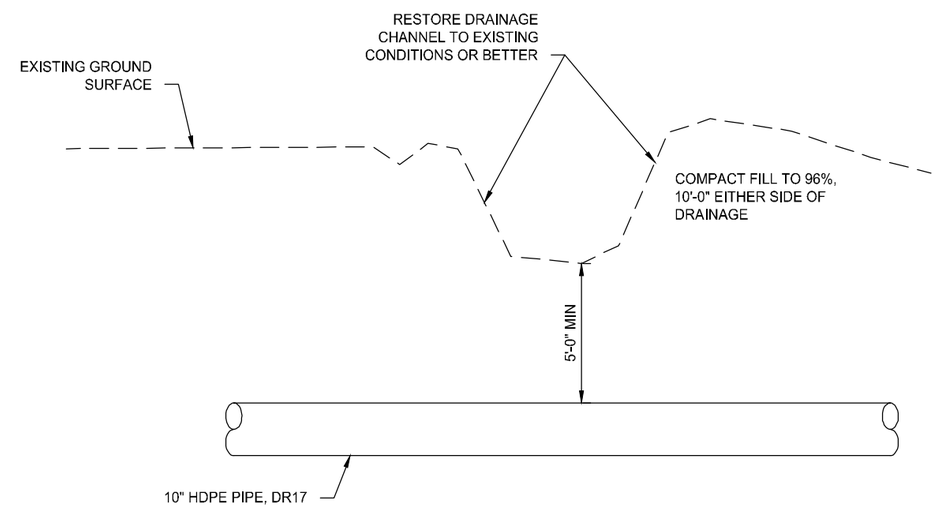


| A5 | DRAINAGE CROSSING DETAIL (TYP) |
|---|---|
| NTS | |

| NO. | DATE | DESIGN REV. BY | DWG'S CORR. BY | PARCELS AFFECTED | REQUEST BY | REMARKS |
|---|---|---|---|---|---|---|
| | | | | | | |

REVISIONS

ORIGINAL SUBMISSION FOR AUTHORIZATION

SCALE: VARIES

DWG NAME: DETAILS_PPL

SHT SET: ####

DWG CREATED: 08/09/2016

UPDATED: 10/19/2016

PLOTTED: 11/4/2016

PEN TBL: –

Jones & DeMille Engineering, Inc.
CIVIL ENGINEERING - SURVEYING - TESTING
GIS - ENVIRONMENTAL
1.800.748.5275 www.jonesanddemille.com

| | | | REVIEW |
|---|---|---|---|
| DESIGN: | . | CHECK: | . |
| DRAWN: | TT 08-16 | CHECK: | . |
| QUANT: | . | CHECK: | . |

DATE: . BY: .

APPROVAL RECOMM: DATE

PROJECT DESIGN ENGINEER

APPROVED: DATE

PACIFICORP

DEER CRK MINE WTR RELIEF PIPE

DETAILS

PROJECT NUMBER: 1506-121

EMERY COUNTY

SHEET NO. DT-01

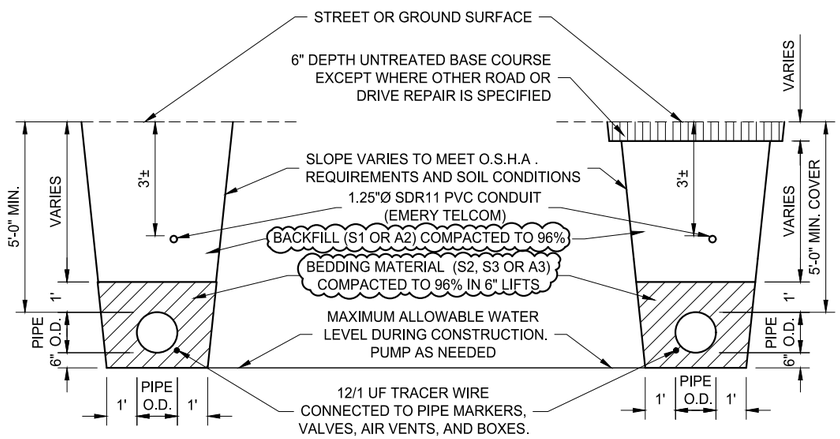


CLASS "D" BACKFILL

CLASS "B" BACKFILL

| D1 | WATER TRENCH DETAIL |
|---|---|
| NTS | |

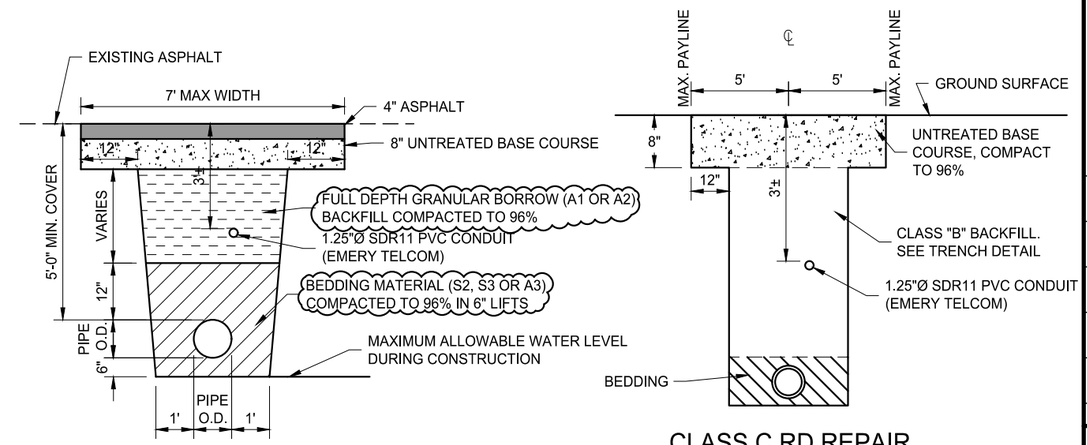


TYPE A RD REPAIR

CLASS C RD REPAIR

| D5 | ROAD REPAIR DETAILS |
|---|---|
| NTS | |

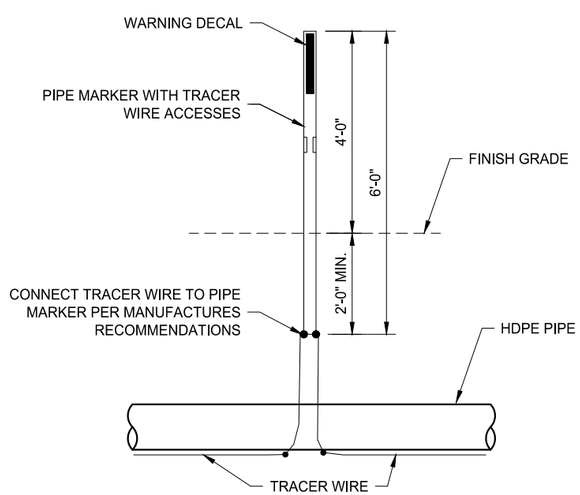


NOTE: LOCATE PIPE MARKER AT 300 FEET MAXIMUM INTERVALS.

| A1 | PIPE MARKER WITH TRACER WIRE |
|---|---|
| NTS | |

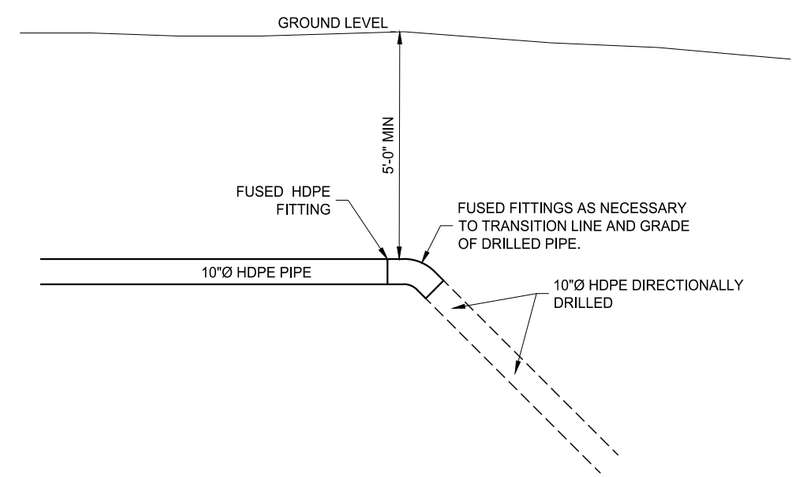


| A5 | DIRECTION DRILL CONNECTION |
|---|---|
| NTS | |

| NO. | DATE | DESIGN REV. BY | MAPS CORR. BY | PARCELS AFFECTED | REQUEST BY | REMARKS |
|---|---|---|---|---|---|---|
| 1 | 11/18/16 | | | | | REVISIONS MADE WITH ADDENDUM #1 |

ORIGINAL SUBMISSION FOR AUTHORIZATION

REVISIONS

SCALE:

Jones & DeMille Engineering, Inc.
CIVIL ENGINEERING - SURVEYING - TESTING
GIS - ENVIRONMENTAL
1.800.748.5275 www.jonesanddemille.com

DESIGN: . CHECK: . REVIEW

DRAWN: TT 08-16 CHECK: . DATE: .

APPROVAL: RECOMMEND: DATE PROJECT DESIGN ENGINEER

PACIFICORP

DEER CRK MINE WTR RELIEF PIPE

DETAILS

EMERY COUNTY

SHEET NO. DT-02

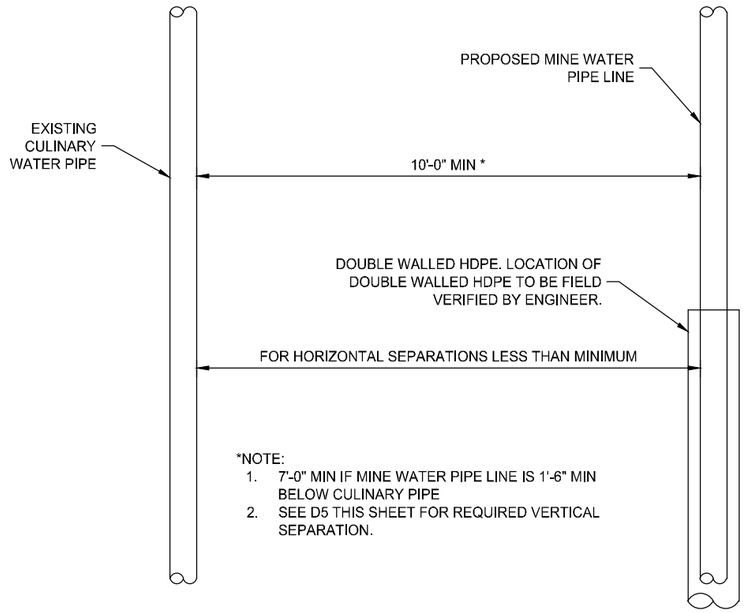


*NOTE:
1. 7'-0" MIN IF MINE WATER PIPE LINE IS 1'-6" MIN BELOW CULINARY PIPE
2. SEE D5 THIS SHEET FOR REQUIRED VERTICAL SEPARATION.

## D1 CULINARY WATER SEPARATION DETAIL

NTS

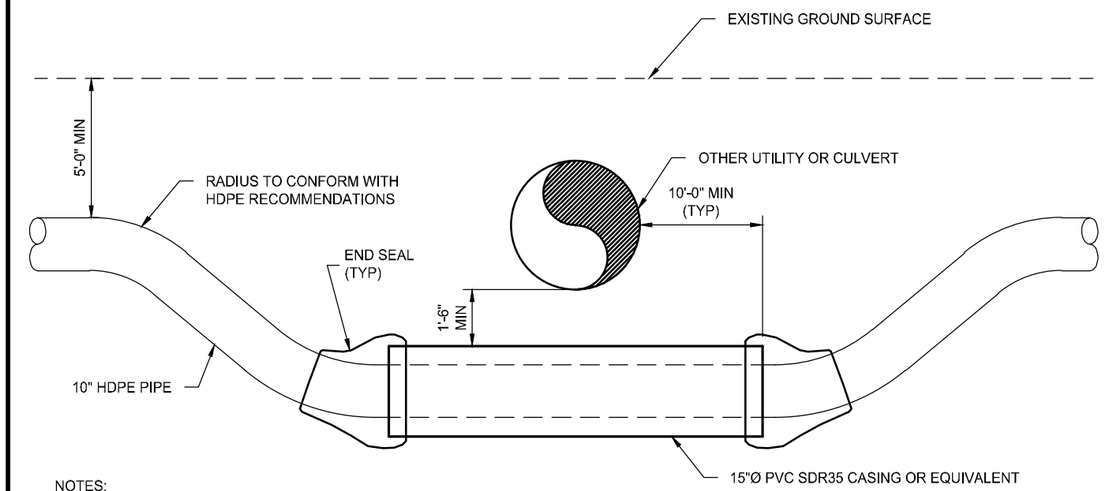


NOTES:
1. IF OTHER UTILITY IS DEEP ENOUGH TO ALLOW HDPE LINE TO BE PLACED ABOVE THE TOP OF OTHER UTILITY BY 1'-0" MINIMUM, NO LOOP NECESSARY.
2. CASING SPACERS REQ'D. (NOT SHOWN)
3. PVC CASING NOT REQUIRED UNDER CULVERTS.
4. VERTICAL SEPARATION WILL BE REQUIRED PER DETAIL.

## D5 UTILITY CROSSING (LOOP) DETAIL

NTS

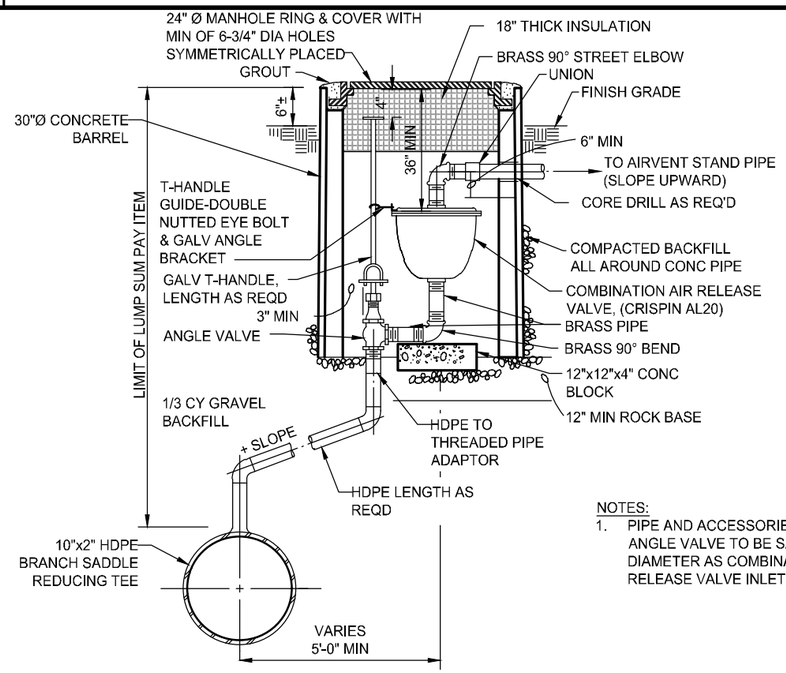


NOTES:
1. PIPE AND ACCESSORIES AND ANGLE VALVE TO BE SAME DIAMETER AS COMBINATION AIR RELEASE VALVE INLET.

## A1 COMBINATION AIR RELEASE VALVE ASSEMBLY DETAIL

NTS

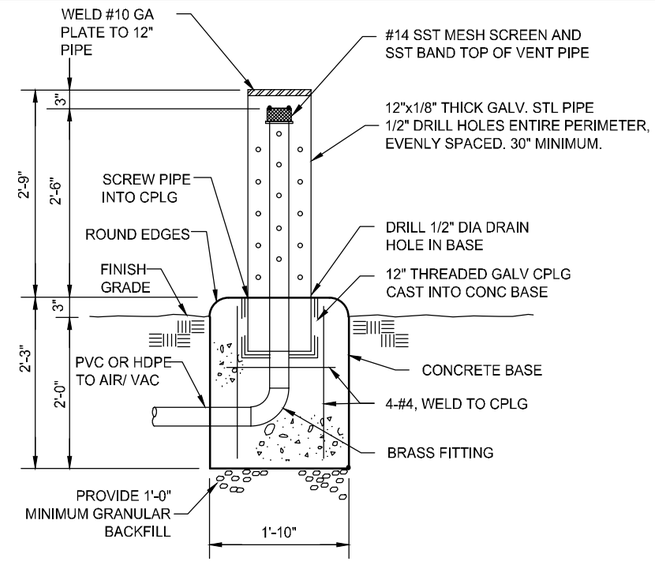


NOTE:
HOT DIP GALVANIZED AFTER FABRICATION

## A5 AIR VENT STAND PIPE DETAIL

NTS

| NO. | DATE | DESIGN REV. BY | DWG'S CORR. BY | PARCELS AFFECTED | REQUEST BY | REMARKS |
|---|---|---|---|---|---|---|
| | | ORIGINAL SUBMISSION FOR AUTHORIZATION | | | | |

REVISIONS

SCALE: VARIES
DWG NAME: DETAILS_PPL
SHT SET: ####
DWG CREATED: 08/09/2016
PEN TBL: –
UPDATED: 10/19/2016
PLOTTED: 11/4/2016

Jones & DeMille Engineering, Inc.
CIVIL ENGINEERING - SURVEYING - TESTING
GIS - ENVIRONMENTAL
1.800.748.5275 www.jonesanddemille.com

| | | | |
|---|---|---|---|
| DESIGN: | . | CHECK: | . |
| DRAWN: | KJ 09-16 | CHECK: | . |
| QUANT: | . | CHECK: | . |

REVIEW
DATE: .
BY: .

APPROVAL RECOMM: DATE
APPROVED: DATE

PACIFICORP
DEER CRK MINE WTR RELIEF PIPE
DETAILS
PROJECT NUMBER: 1506-121

EMERY
COUNTY

SHEET NO. DT-03

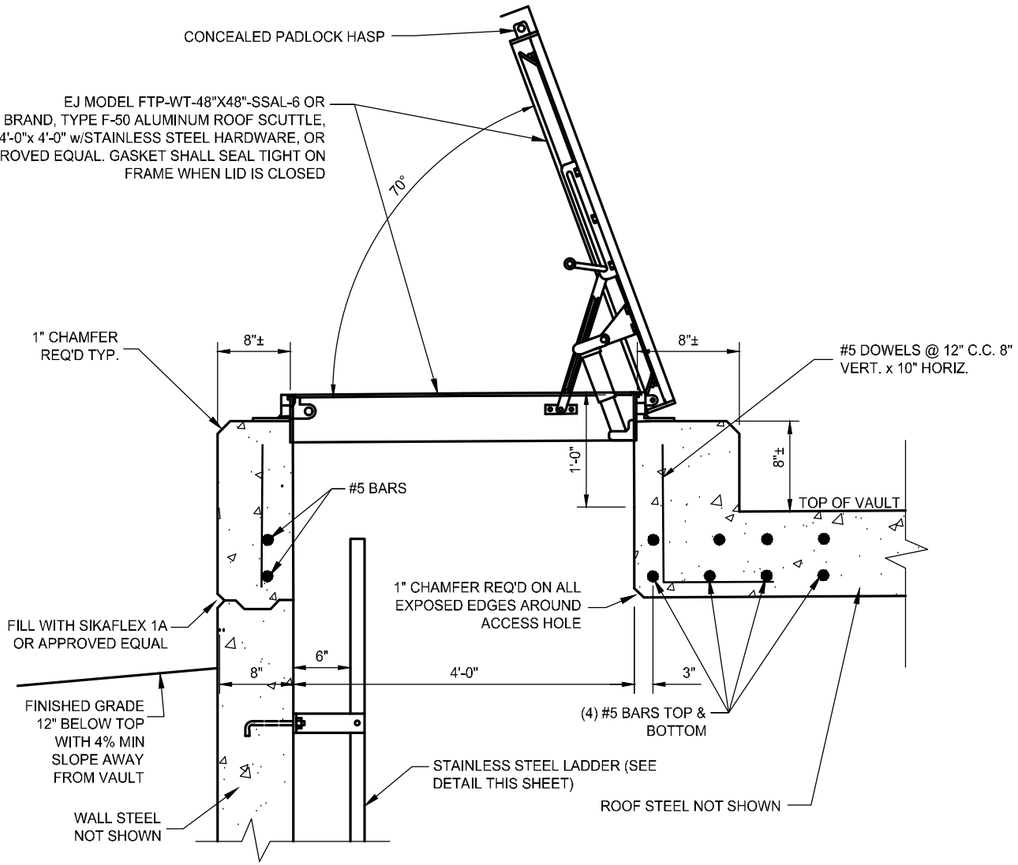


## ACCESS HOLE DETAIL

NOTE:
1. SEE SHEET DT-05 & DT-06 FOR ACCESS HOLE LOCATION.

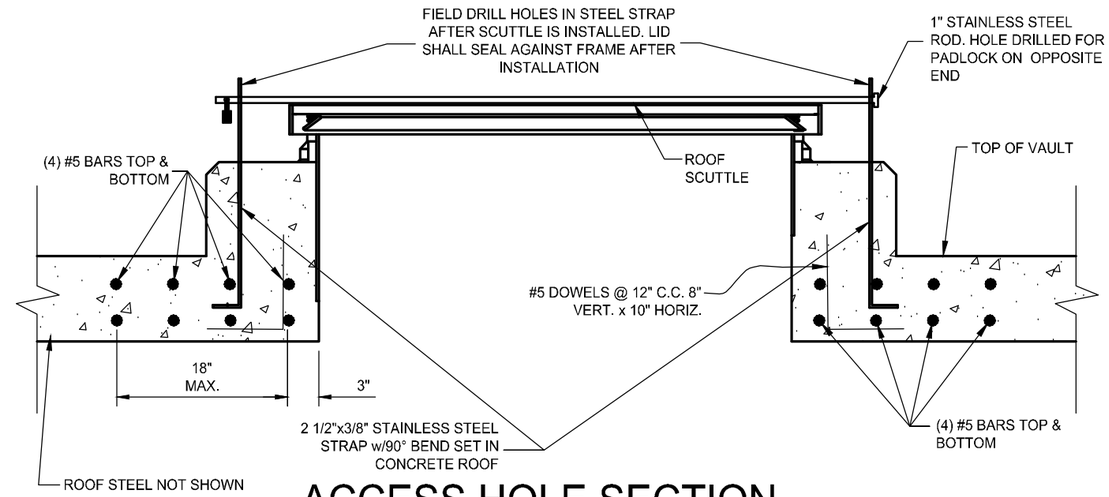


## ACCESS HOLE SECTION

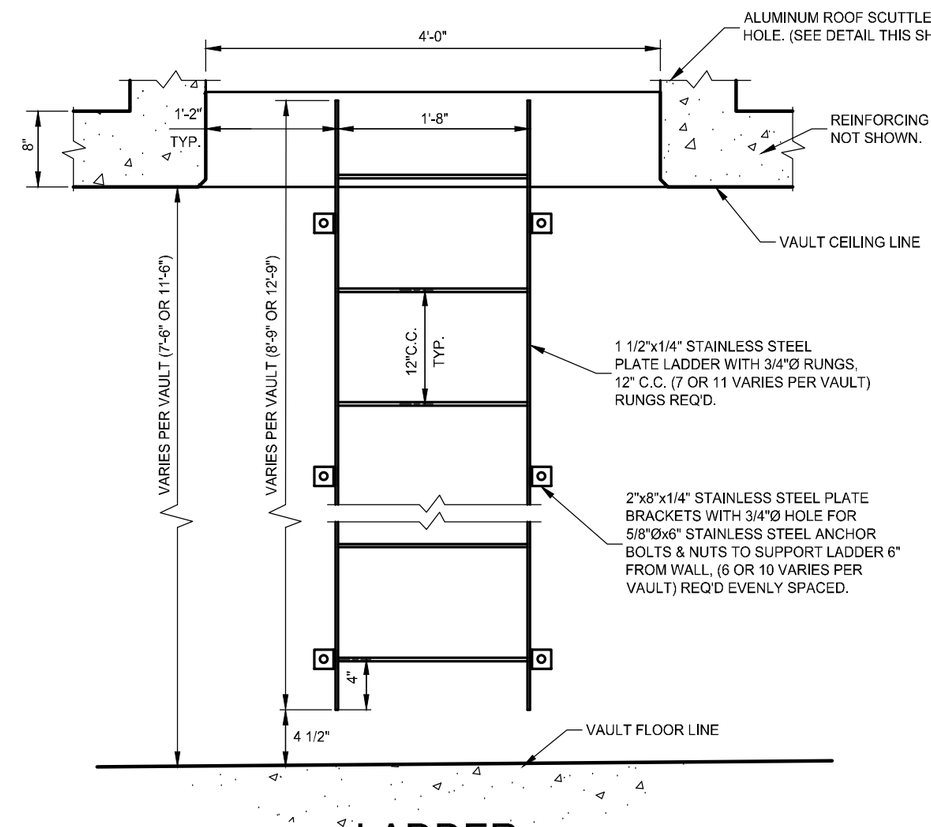


## LADDER

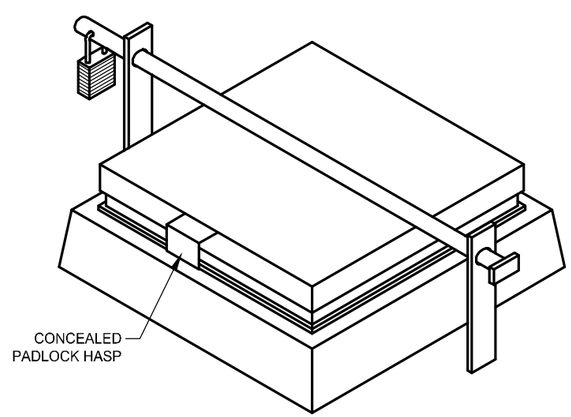


## ACCESS HOLE 3D VIEW

| | |
|---|---|
| A1 | *VAULT ACCESS HATCH DETAIL* |
| NTS | |

| NO. | DATE | DESIGN REV. BY | DWG'S CORR. BY | PARCELS AFFECTED | REQUEST BY | REMARKS |
|---|---|---|---|---|---|---|
| | | | | | | |

REVISIONS

ORIGINAL SUBMISSION FOR AUTHORIZATION

DWG NAME: DETAILS_PPL
SHT SET: ####
DWG CREATED: 08/09/2016
UPDATED: 10/19/2016
PLOTTED: 11/4/2016
PEN TBL: –
SCALE: VARIES

Jones & DeMille Engineering, Inc.
CIVIL ENGINEERING - SURVEYING - TESTING
GIS - ENVIRONMENTAL
1.800.748.5275 www.jonesanddemille.com

REVIEW
DATE:
BY:
CHECK:
CHECK:
CHECK:
DESIGN:
DRAWN: KJ 09-16
QUANT:

APPROVAL RECOMM. DATE PROJECT DESIGN ENGINEER
APPROVED DATE

PACIFICORP
DEER CRK MINE WTR RELIEF PIPE
DETAILS
PROJECT NUMBER: 1506-121

EMERY
COUNTY

SHEET NO. DT-04

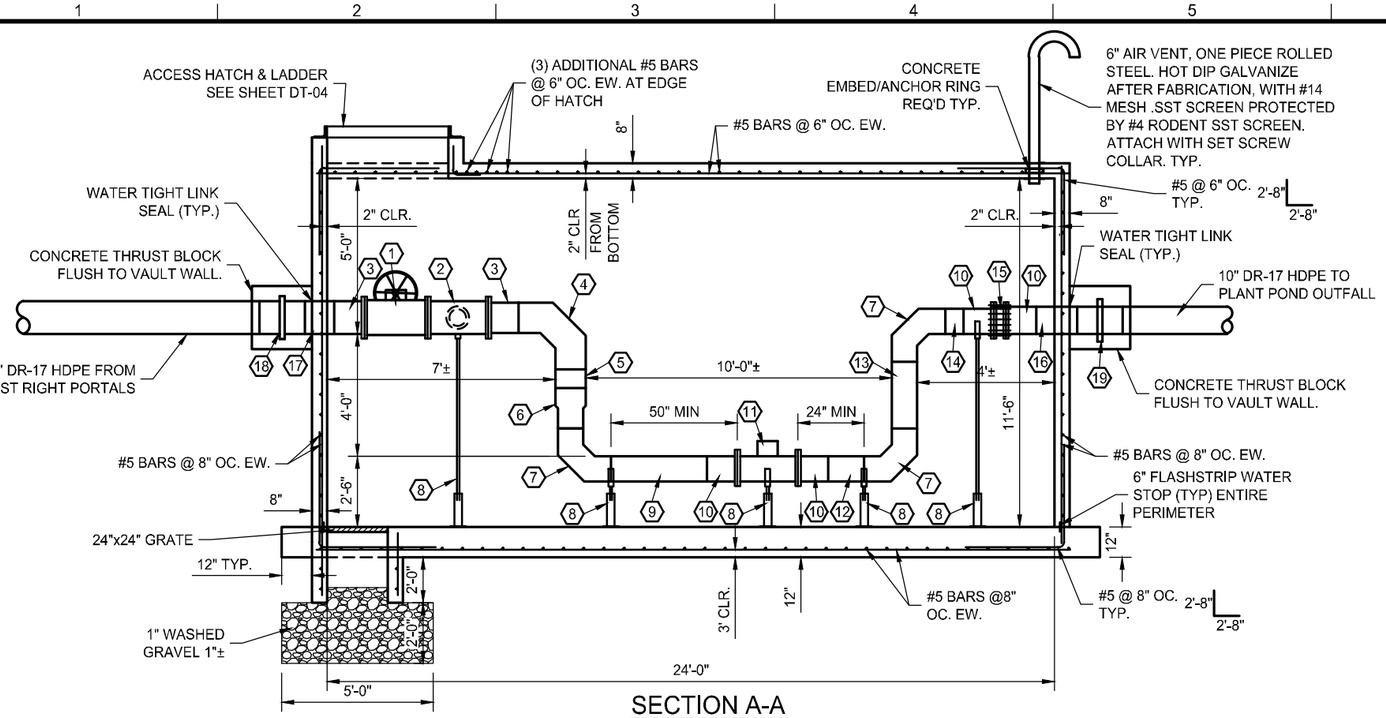


## SECTION A-A

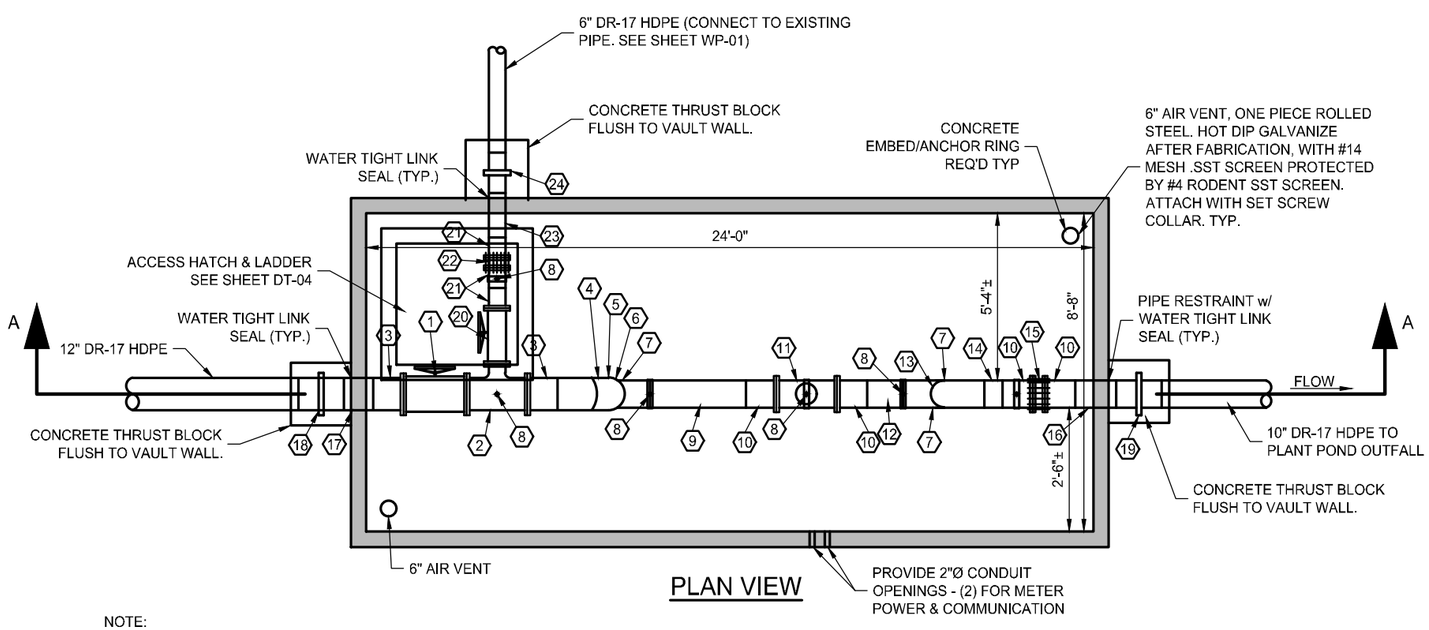


## PLAN VIEW

NOTE:
PIPE PENETRATION REINFORCING REQUIRED AT ALL WALL AND ROOF PENETRATIONS.

## PRV TYPE 1 PIPING SCHEDULE

| MK | DESCRIPTION | SIZE | CONNEC. | REQ'D | REMARKS |
|---|---|---|---|---|---|
| 1 | BALL VALVE | 12" | FL. | 1 | TRUNNION MOUNTED |
| 2 | D.I. TEE | 12"X12"X6" | FL. | 1 | |
| 3 | HDPE FLANGE ADAPTOR | 12" | FL.xFUSED | 2 | W/ S.S. FOLLOWER RING |
| 4 | HDPE 90° BEND | 12" | FUSED | 1 | |
| 5 | HDPE SPOOL | 12"Øx7" | FUSED | 1 | |
| 6 | HDPE REDUCER | 12"X10" | FUSED | 1 | |
| 7 | HDPE 90° BEND | 10" | FUSED | 3 | |
| 8 | PIPE SUPPORT | | | 6 | 5 w/ PIPE SADDLE |
| 9 | HDPE SPOOL | 10"Øx3'-2" | FUSED | 1 | |
| 10 | HDPE FLANGE ADAPTOR | 10" | FL.xFUSED | 4 | W/ S.S. FOLLOWER RING |
| 11 | MAG METER | 10" | FL. | 1 | |
| 12 | HDPE SPOOL | 10"Øx1'-2" | FUSED | 1 | |
| 13 | HDPE SPOOL | 10"Øx2'x2.5" | FUSED | 1 | |
| 14 | HDPE SPOOL | 10"Øx7" | FUSED | 1 | |
| 15 | DISMANTLING JOINT | 10" | FL.xFL. | 1 | |
| 16 | HDPE SPOOL | 10"Øx1'4.5" | FUSED | 1 | FIELD VERIFY LENGTH |
| 17 | HDPE SPOOL | 12"Øx12" | FUSED | 1 | FIELD VERIFY LENGTH |
| 18 | HDPE ANCHOR RING | 12" | FUSED | 1 | |
| 19 | HDPE ANCHOR RING | 10" | FUSED | 1 | |
| 20 | BALL VALVE | 6" | FL. | 1 | |
| 21 | FLANGED ADAPTOR | 6" | FL.xFUSED | 3 | W/ S.S. FOLLOWER RING |
| 22 | DISMANTLING JOINT | 6" | FL.. | 1 | |
| 23 | HDPE SPOOL | 6"Øx1'-6" | FUSED | 1 | |
| 24 | HDPE ANCHOR RING | 6" | FUSED | 1 | |
| 25 | | | | | |

NOTES:
- CONTRACTOR TO SUPPLY SHOP DRAWINGS OF ANY PRE-MANUFACTURED ELEMENT.
- 4000 PSI CLASS AE CONCRETE.
- GRADE 60 REBAR

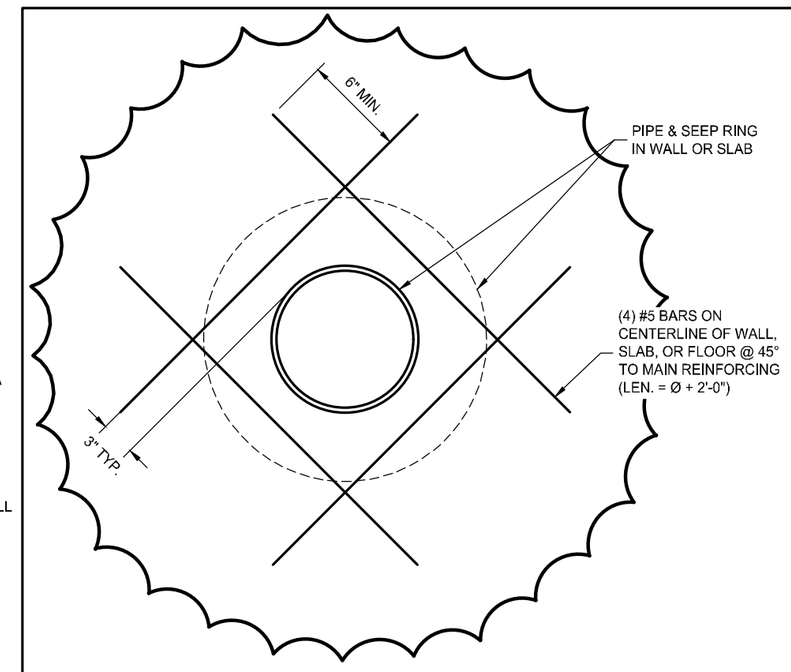


NOTE:
PIPE PENETRATION REINFORCING REQUIRED AT ALL WALL AND ROOF PENETRATIONS.

| | | | |
|---|---|---|---|
| A1 | 1ST RIGHT PORTAL VAULT PLUMBING (WITH FLOWMETER) | A6 | TYPICAL PIPE PENETRATION THROUGH WALL/ROOF SLAB |
| NTS | | NTS | |

| NO. | DATE | DESIGN REV. BY | DWG'S CORR. BY | PARCELS AFFECTED | REQUEST BY | REMARKS |
|---|---|---|---|---|---|---|
| | | | | | | |

ORIGINAL SUBMISSION FOR AUTHORIZATION

REVISIONS

SCALE: VARIES

DWG NAME: DET-ALS_PPL
SHT SET: ####

DWG CREATED: 08/09/2016
PEN TBL: –

UPDATED: 10/19/2016
PLOTTED: 11/4/2016

Jones & DeMille Engineering, Inc.
CIVIL ENGINEERING - SURVEYING - TESTING
GIS - ENVIRONMENTAL
1.800.748.5273 www.jonesanddemille.com

| | | | |
|---|---|---|---|
| DESIGN: JA | 16-08 | CHECK: CF | 16-09 |
| DRAWN: KJ | 08-16 | CHECK: CF | 16-09 |
| QUANT: . | . | CHECK: . | . |

REVIEW
DATE: .
BY: .

APPROVAL RECOMM. DATE
PROJECT DESIGN ENGINEER
APPROVED: DATE

PACIFICORP
DEER CRK MINE WTR RELIEF PIPE
DETAILS
PROJECT NUMBER: 1506-121

EMERY
COUNTY

SHEET NO. DT-05

NOTES:

- CONTRACTOR TO SUPPLY SHOP DRAWINGS OF ANY PRE-MANUFACTURED ELEMENT.
- 4000 PSI CLASS AE CONCRETE.
- GRADE 60 REBAR

## PRV TYPE 1 PIPING SCHEDULE

| MK | DESCRIPTION | SIZE | CONNEC. | REQ'D | REMARKS |
|---|---|---|---|---|---|
| 1 | MAG METER | 10" | FL. | 1 | |
| 2 | HDPE SPOOL | 10"Øx1'-4"± | FUSED | 2 | FIELD VERIFY LENGTH |
| 3 | HDPE TEE | 10" | FUSED | 1 | |
| 4 | PIPE SUPPORT | | | 13 | |
| 5 | HDPE REDUCING TEE | 10"x10"x6" | FUSED | 2 | |
| 6 | HDPE SPOOL | 10"Øx2'-2"± | FUSED | 1 | FIELD VERIFY LENGTH |
| 7 | BALL VALVE | 10" | FL. | 2 | CLASS 150 WKM 370D4 TRUNNION MOUNTED BALL VALVE |
| 8 | HDPE FLANGED ADAPTOR | 10" | FL.xFUSED | 6 | W/ S.S. FOLLOWER RING |
| 9 | HDPE SPOOL | 10"±x2'-6"± | FUSED | 1 | FIELD VERIFY LENGTH |
| 10 | HDPE SPOOL | 10"Øx2'-10"± | FUSED | 2 | FIELD VERIFY LENGTH |
| 11 | HDPE FLANGED ADAPTOR | 6" | FL.xFUSED | 6 | W/ S.S. FOLLOWER RING |
| 12 | HDPE TEE | 6" | FUSED | 1 | |
| 13 | HDPE REDUCING TEE | 6"x6'x2" | FUSED | 2 | |
| 14 | BALL VALVE | 6" | FL. | 3 | CLASS 150 WKM 370D4 TRUNNION MOUNTED BALL VALVE |
| 15 | PRESSURE RELIEF VALVE | 6" | FL. | 1 | CLA-VAL MODEL 50-01 OR APPROVED EQUAL |
| 16 | HDPE SPOOL | 6"Øx4"± | FUSED | 1 | FIELD VERIFY LENGTH |
| 17 | HDPE 90° BEND | 6" | FUSED | 1 | |
| 18 | HDPE SPOOL | 6"Øx5'-5"± | FUSED | 1 | FIELD VERIFY LENGTH |
| 19 | HDPE ANCHOR RING | 10" | FUSED | 3 | PLACED IN THRUST BLOCK FLUSH TO VAULT WALL |
| 20 | HDPE SPOOL | 2"Øx-2'-2" | FUSED | 2 | FIELD VERIFY LENGTH |
| 21 | STAINLESS STEEL THREADED TRANSITION | 2" | SEE REMARK | 2 | 2" IPS SDR11 BUTT FUSION X 2" MALE |
| 22 | BRONZE SPOOL | 2"Øx9" | THD. | 1 | FIELD VERIFY LENGTH, TAPPED FOR SAMPLE COCK |
| 23 | SAMPLE COCK | 3/4" | | 1 | SMOOTH NOSED SAMPLE COCK |
| 24 | BALL VALVE | 2" | THD. | 1 | CLASS 150 WKM 370D4 TRUNNION MOUNTED BALL VALVE |
| 25 | HDPE 90° BEND | 2" | FUSED | 1 | |

NOTE:
PIPE PENETRATION REINFORCING REQUIRED AT ALL WALL AND ROOF PENETRATIONS.
SEE DETAIL ON DT-05.

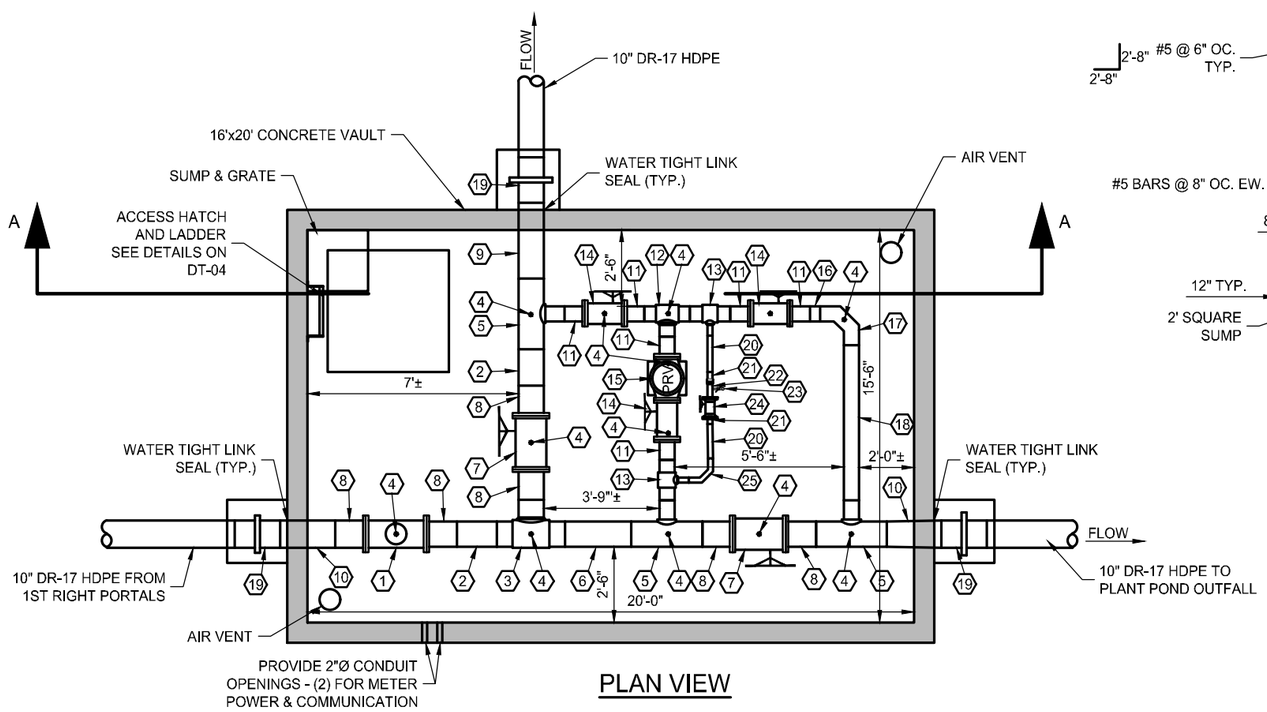


PLAN VIEW

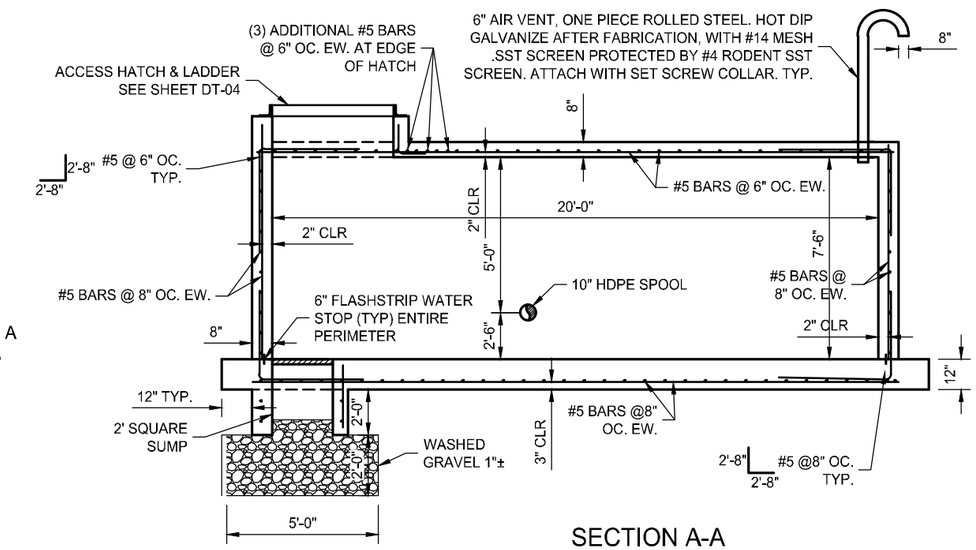


SECTION A-A

NOTE:
PIPE PENETRATION REINFORCING REQUIRED AT ALL WALL AND ROOF PENETRATIONS.
SEE DETAIL ON DT-05.

| | |
|---|---|
| A1 | PLANT POND VAULT PLUMBING |
| NTS | |

| NO. | DATE | DESIGN REV. BY | DWG'S CORR. BY | PARCELS AFFECTED | REQUEST BY | REMARKS |
|---|---|---|---|---|---|---|
| | | ORIGINAL SUBMISSION FOR AUTHORIZATION | | | | |

REVISIONS

SCALE: VARIES

DWG NAME: DET-ALS_PPIL
SHT SET: ####

DWG CREATED: 08/09/2016
UPDATED: 10/19/2016
PLOTTED: 11/4/2016
PEN TBL: –


Jones & DeMille Engineering, Inc.
CIVIL ENGINEERING - SURVEYING - TESTING
GIS - ENVIRONMENTAL
1.800.748.5275 www.jonesanddemille.com


| | | | |
|---|---|---|---|
| DESIGN: . | CHECK: . | REVIEW | |
| DRAWN: KJ 09-16 | CHECK: . | DATE: . | |
| QUANT: . | CHECK: . | BY: . | |

APPROVAL RECOMM: DATE
PROJECT DESIGN ENGINEER
APPROVED: DATE

PACIFICORP

DEER CRK MINE WTR RELIEF PIPE

DETAILS

PROJECT NUMBER: 1506-121

EMERY
COUNTY

SHEET NO. DT-06

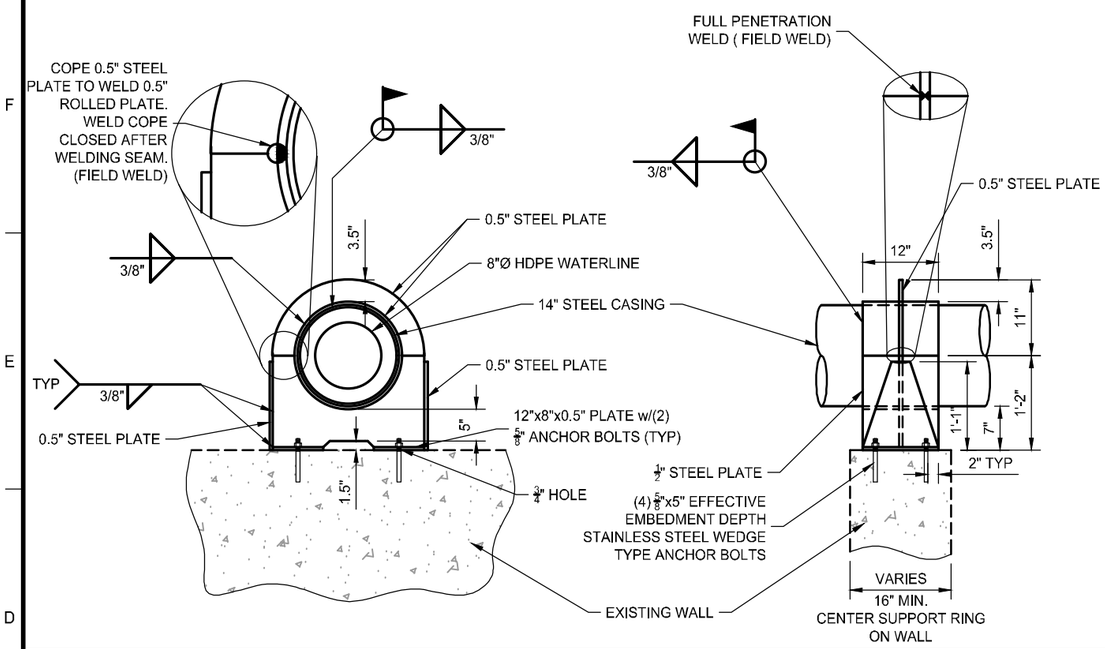


| D1 | PIPE SUPPORT RING (DIVERSION DAM CROSSING) |
|---|---|
| NTS | |

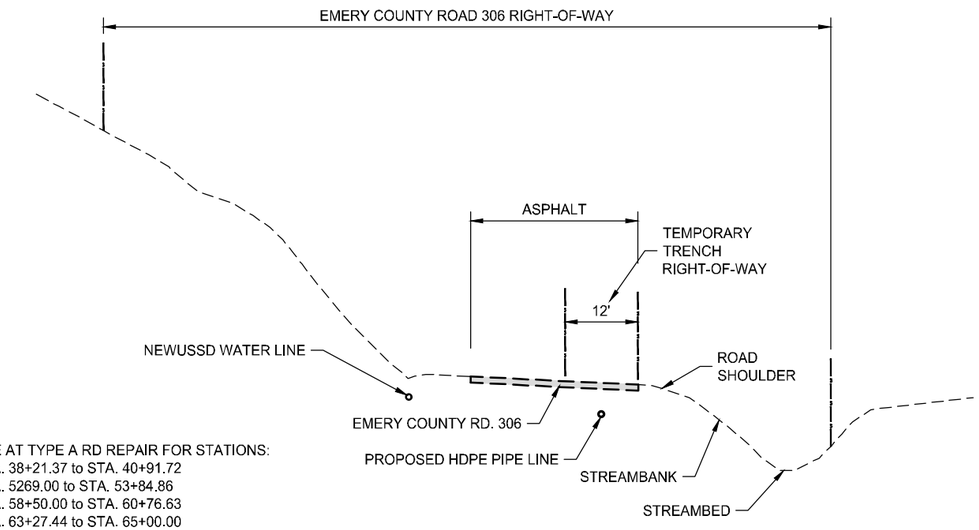


USE AT TYPE A RD REPAIR FOR STATIONS:
STA. 38+21.37 to STA. 40+91.72
STA. 5269.00 to STA. 53+84.86
STA. 58+50.00 to STA. 60+76.63
STA. 63+27.44 to STA. 65+00.00
STA. 70+00.00 to STA. 73+71.05
STA. 87+72.16 to STA. 88+33.75
STA. 110+29.82 to STA. 112+00.00

| D5 | TYPICAL SECTION A-A |
|---|---|
| NTS | |

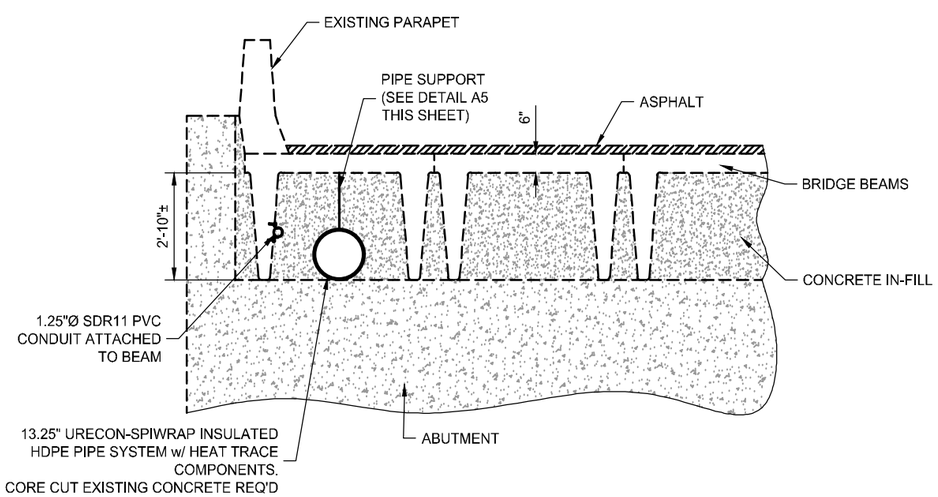


| A1 | RILDA BRIDGE CASING DETAIL |
|---|---|
| NTS | |

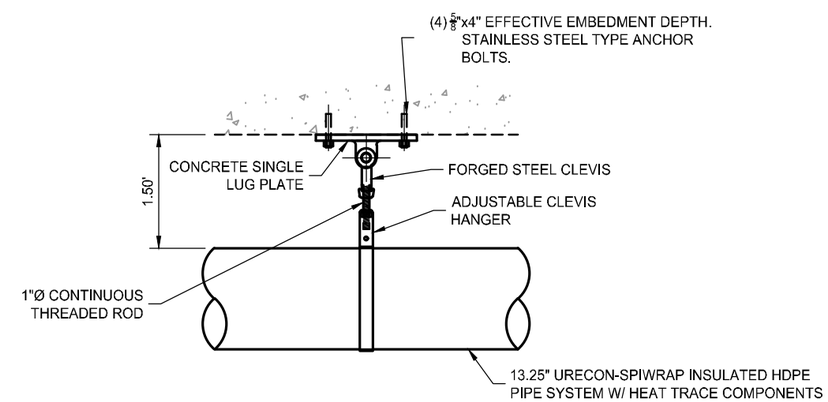


NOTE:
PIPE SUPPORT COMPONENTS BY ANVIL INTERNATIONAL OR EQUIVALENT
CONCRETE SINGLE LUG PLATE - FIGURE 47
FORGED STEEL CLEVIS - FIGURE 299
CONTINUOUS THREAD ROD - FIGURE 146
ADJUSTABLE CLEVIS HANGER - FIGURE 260

| A5 | PIPE SUPPORT DETAIL |
|---|---|
| NTS | |

| NO. | DATE | DESIGN REV. BY | DWG'S CORR. BY | PARCELS AFFECTED | REQUEST BY | REMARKS |
|---|---|---|---|---|---|---|
| | | ORIGINAL SUBMISSION FOR AUTHORIZATION | | | | |

REVISIONS

SCALE: VARIES
DWG NAME: DETAILS_PP1L
SHT SET: ####
DWG CREATED: 08/09/2016
PEN TBL: –
UPDATED: 10/19/2016
PLOTTED: 11/4/2016

Jones & DeMille Engineering, Inc.
CIVIL ENGINEERING - SURVEYING - TESTING
GIS - ENVIRONMENTAL
1.800.748.5275 www.jonesandmille.com

REVIEW
DATE: .
BY: .
CHECK: .
DESIGN: .
DRAWN: TT 08-16
QUANT: .
APPROVAL RECOMM: DATE
PROJECT DESIGN ENGINEER
APPROVED: DATE

PACIFICORP
DEER CRK MINE WTR RELIEF PIPE
DETAILS
PROJECT NUMBER: 1506-121
EMERY COUNTY
SHEET NO. DT-07

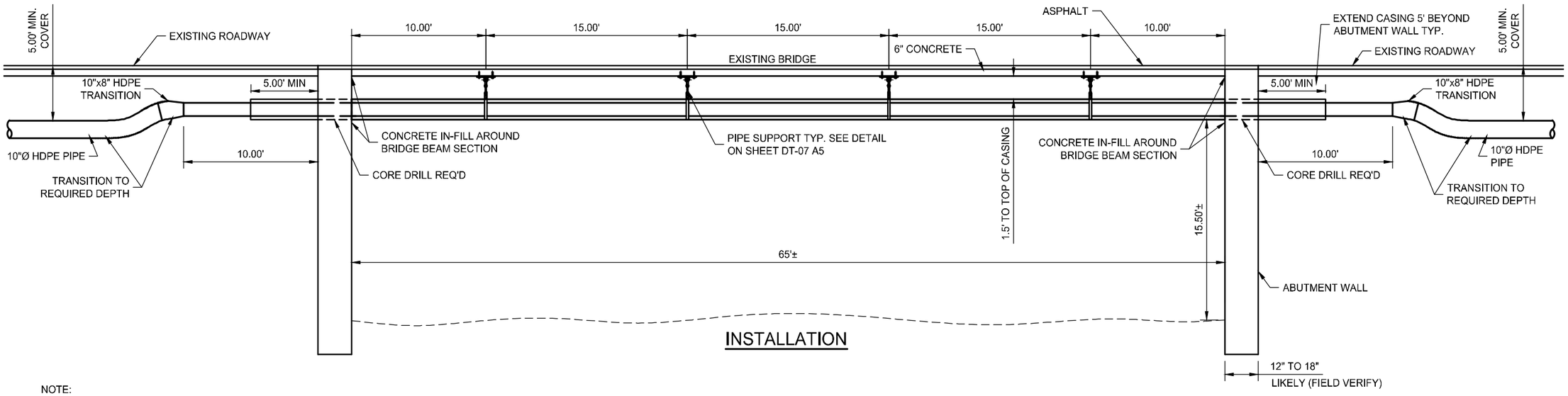


INSTALLATION

NOTE:
TERMINATE HEAT/TRACER TAPE AT PULL BOXES AT EITHER END.

SEE DETAIL AND A1, & A5, ON DT-07 FOR ADDITIONAL DETAILS.

## D1 RILDA BRIDGE CASING INSTALLATION DETAIL

NTS

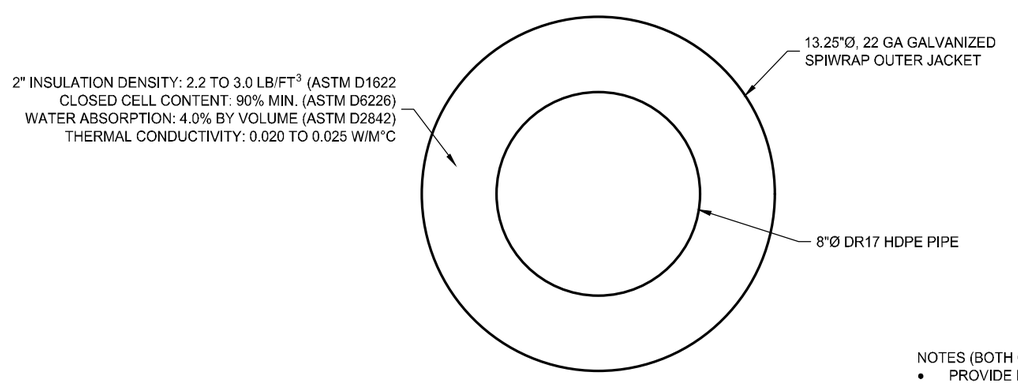


## A1 RILDA BRIDGE CASING DETAIL

NTS

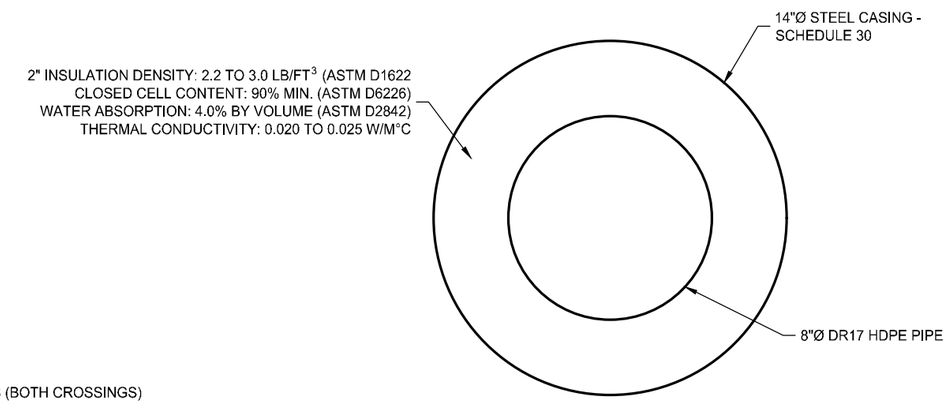


NOTES (BOTH CASINGS):

- PROVIDE HEAT TRACE COMPONENTS (BOTH CROSSINGS)
- ELECTRONIC THERMOSTAT w/ GROUND FAULT DETECTION.
- 120-240 VAC. 30 AMP 2 POLE
- NEMA 4 PAINTED STEEL ENCLOSURE
- FACTORY SET @ 37.4° F
- POWER FEED KIT
- 100 OHM RTO TEMP SENSOR w/20' GREY PVC END WIRE
- THERMOCABLE HEATING CABLE WITH OUTPUT OF 4 WATTS/FT @ 240V
- 12 AWG BUS WIRES

## A5 DIVERSION BRIDGE CASING DETAIL

NTS

| NO. | DATE | DESIGN REV. BY | DWG'S CORR. BY | PARCELS AFFECTED | REQUEST BY | REMARKS |
|---|---|---|---|---|---|---|
| | | ORIGINAL SUBMISSION FOR AUTHORIZATION | | | | |

REVISIONS

DWG CREATED: 08/09/2016 UPDATED: 10/19/2016
PEN TBL: – PLOTTED: 11/4/2016
DWG NAME: DETAILS_PPL
SHT SET: ####
SCALE: NTS

Jones & DeMille Engineering, Inc.
CIVIL ENGINEERING - SURVEYING - TESTING
GIS - ENVIRONMENTAL
1.800.748.5275 www.jonesandmille.com

REVIEW
DATE: BY:
DESIGN: CHECK:
DRAWN: TT 08-16 CHECK:
QUANT: CHECK:
APPROVAL RECOMM. DATE
PROJECT DESIGN ENGINEER
APPROVED: DATE

PACIFICORP
DEER CRK MINE WTR RELIEF PIPE
DETAILS
PROJECT NUMBER: 1506-121
EMERY COUNTY
SHEET NO. DT-08

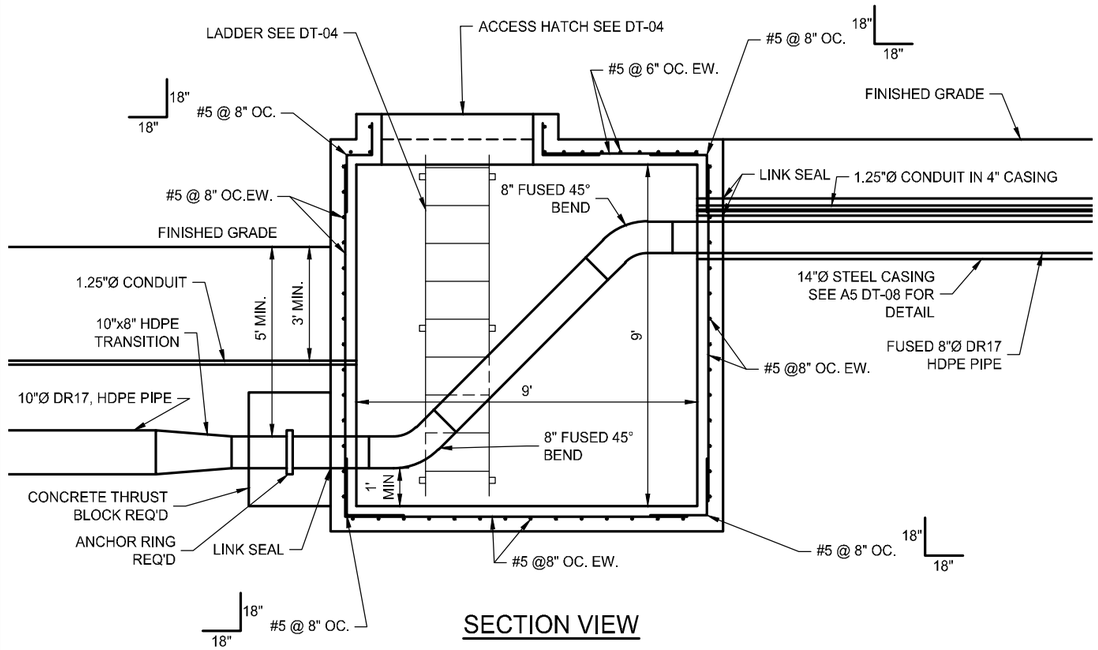


SECTION VIEW

| D1 | ACCESS VAULT SECTION |
|---|---|
| NTS | |

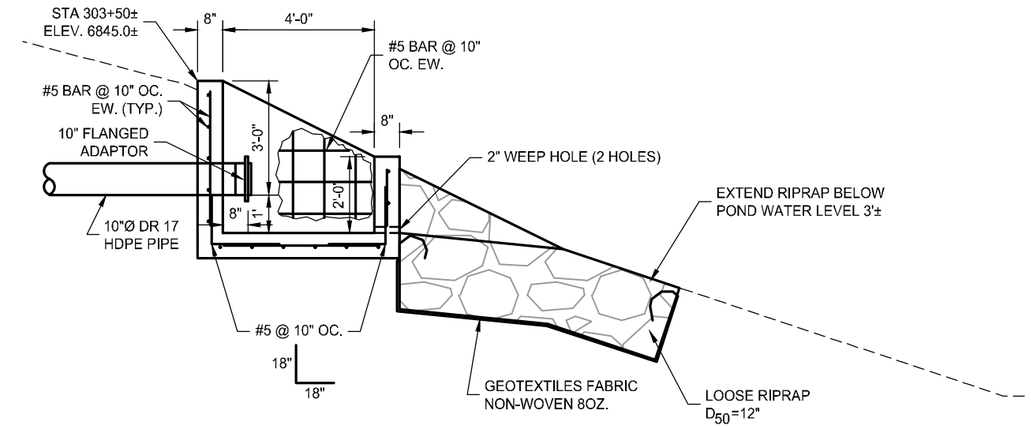


SECTION VIEW

| D5 | OUTLET DIFFUSER DETAIL |
|---|---|
| NTS | |

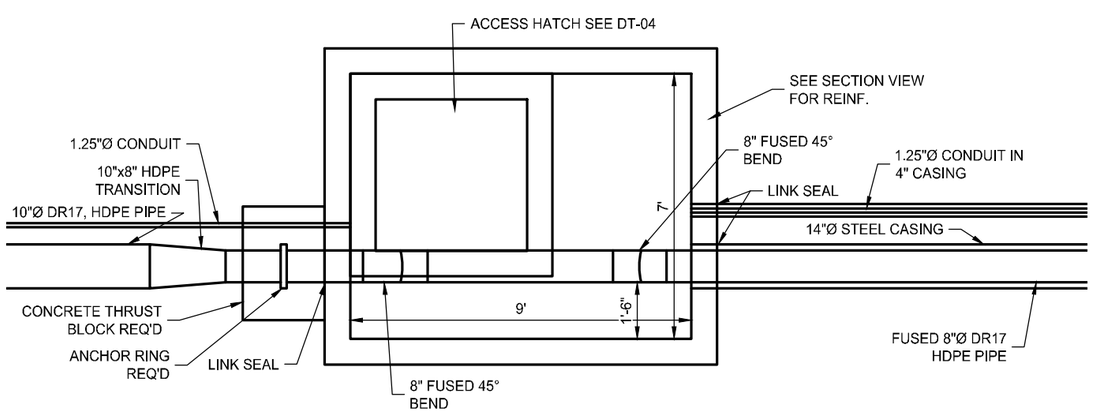


PLAN VIEW

| A1 | ACCESS VAULT DETAIL |
|---|---|
| NTS | |

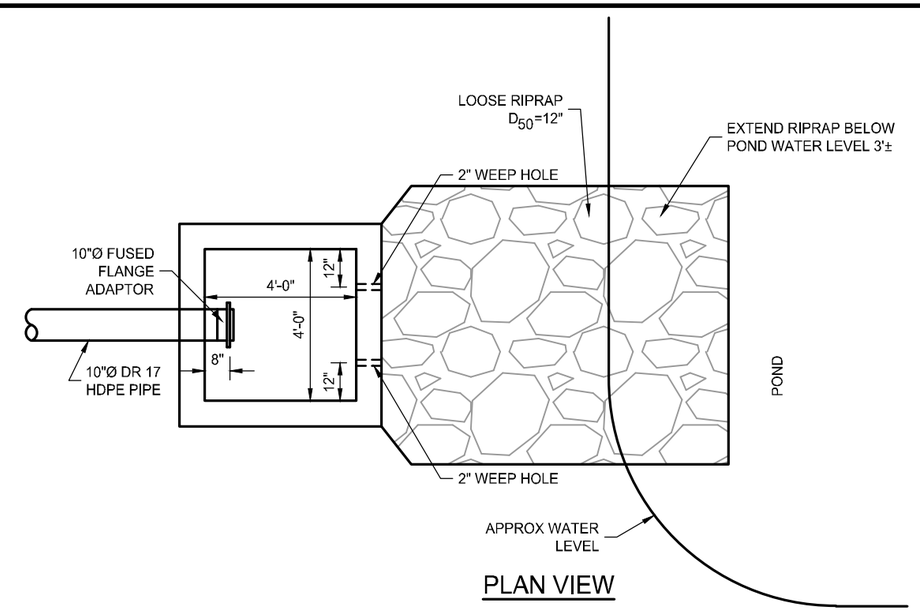


PLAN VIEW

| A5 | OUTLET DIFFUSER DETAIL |
|---|---|
| NTS | |

| NO. | DATE | DESIGN REV. BY | DWG'S CORR. BY | PARCELS UPDATED | REQUEST BY | REMARKS |
|---|---|---|---|---|---|---|
| | | ORIGINAL SUBMISSION FOR AUTHORIZATION | | | | |

REVISIONS

DWG CREATED: 08/09/2016 UPDATED: 10/19/2016
PEN TBL: – PLOTTED: 11/4/2016
DWG NAME: DETAILS_PPL
SHT SET: ####
SCALE: VARIES

Jones & DeMille Engineering, Inc.
CIVIL ENGINEERING - SURVEYING - TESTING
GIS - ENVIRONMENTAL
1.800.748.5275 www.jonesandDemille.com

REVIEW
DATE: . BY: .

DESIGN: . CHECK: .
DRAWN: TT 08-16 CHECK: .
QUANT: . CHECK: .

APPROVAL RECOMM: DATE PROJECT DESIGN ENGINEER
APPROVED: DATE

PACIFICORP
DEER CRK MINE WTR RELIEF PIPE
DETAILS
PROJECT NUMBER: 1506-121

EMERY
COUNTY

SHEET NO. DT-09

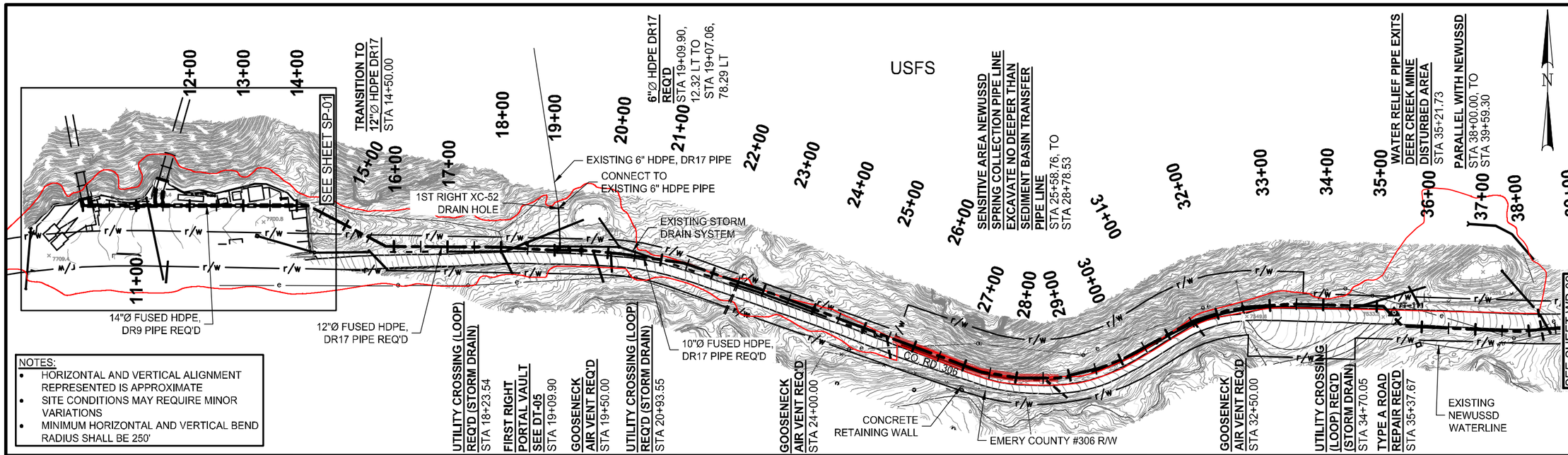


NOTES:
- HORIZONTAL AND VERTICAL ALIGNMENT REPRESENTED IS APPROXIMATE
- SITE CONDITIONS MAY REQUIRE MINOR VARIATIONS
- MINIMUM HORIZONTAL AND VERTICAL BEND RADIUS SHALL BE 250'

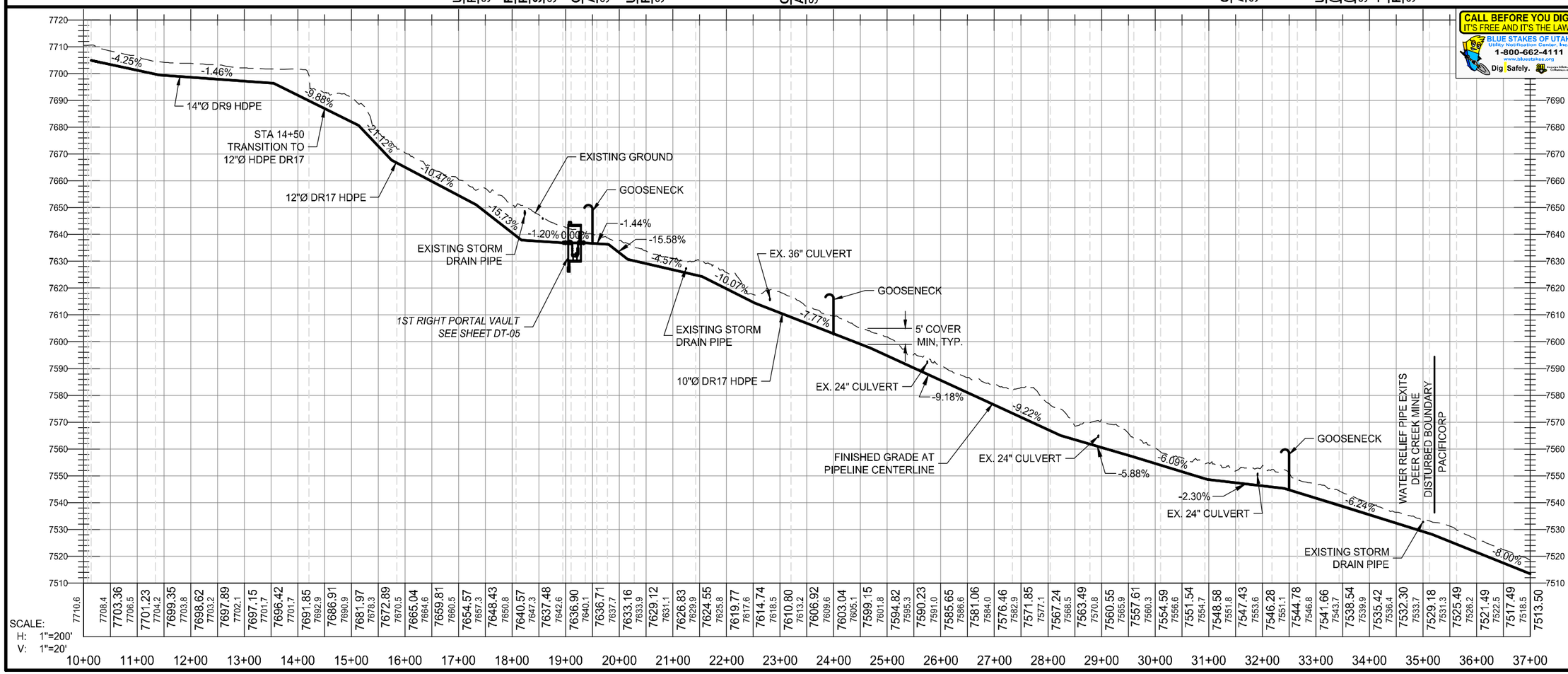


CALL BEFORE YOU DIG. IT'S FREE AND IT'S THE LAW.
BLUE STAKES OF UTAH Utility Notification Center, Inc. 1-800-662-4111 www.blustakes.org
Dig Safely.

| NO. | DATE | DESIGN REV. BY | MAPS CORR. BY | PARCELS AFFECTED | REQUES BY | REMARKS |
|---|---|---|---|---|---|---|
| | | | | | | |

REVISIONS

ORIGINAL SUBMISSION FOR AUTHORIZATION

SCALE: 1" = 200'
DWG NAME: WP-01
SHT SET: 1505-121P
DWG CREATED: 2016/05/31
PEN TBL: 1sinc/r4c2800.ctb
UPDATED: 11/4/2016
PLOTTED: 11/4/2016

Jones & DeMille Engineering, Inc.
CIVIL ENGINEERING - SURVEYING - TESTING
GIS - ENVIRONMENTAL
1.800.746.5275 www.jonesandmille.com

| | | | |
|---|---|---|---|
| DESIGN: | JA | 15-10 | CF |
| DRAWN: | KJ | 16-05 | BB |
| QUANT: | JA | 15-10 | CF |

REVIEW
DATE: 15-10
BY:

APPROVAL RECOMM. DATE PROJECT DESIGN ENGINEER
APPROVED: DATE

PACIFICORP
DEER CRK MINE WTR RELIEF PIPE
WATER PLAN & PROFILE SHEET
PROJECT NUMBER: 1506-121

EMERY COUNTY

SHEET NO. WP-01

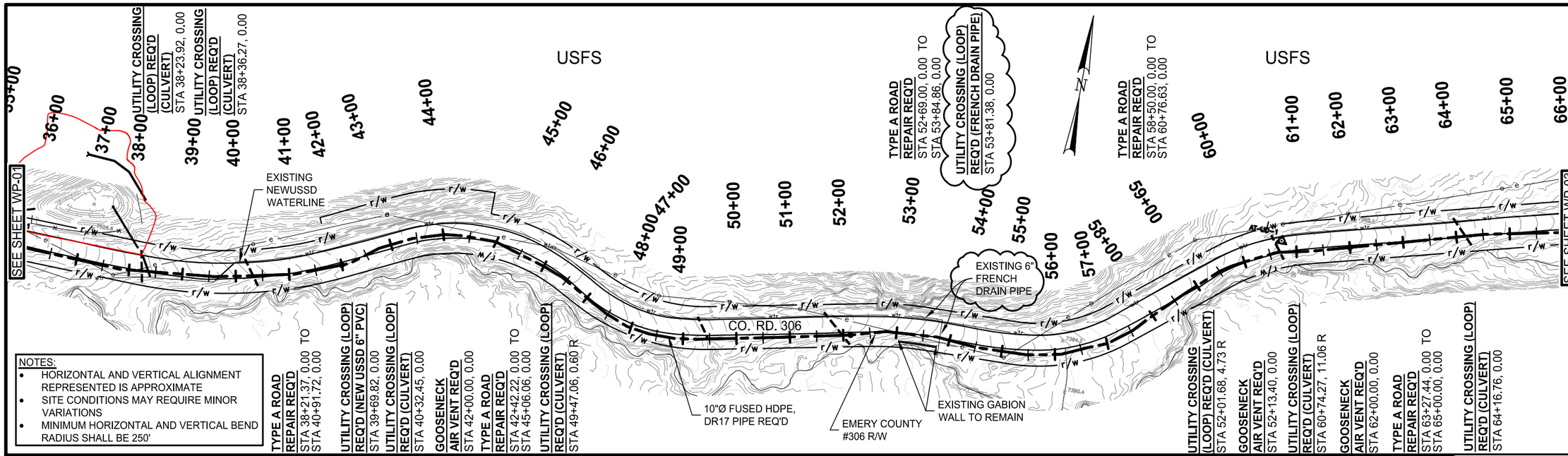


NOTES:

- HORIZONTAL AND VERTICAL ALIGNMENT REPRESENTED IS APPROXIMATE
- SITE CONDITIONS MAY REQUIRE MINOR VARIATIONS
- MINIMUM HORIZONTAL AND VERTICAL BEND RADIUS SHALL BE 250'

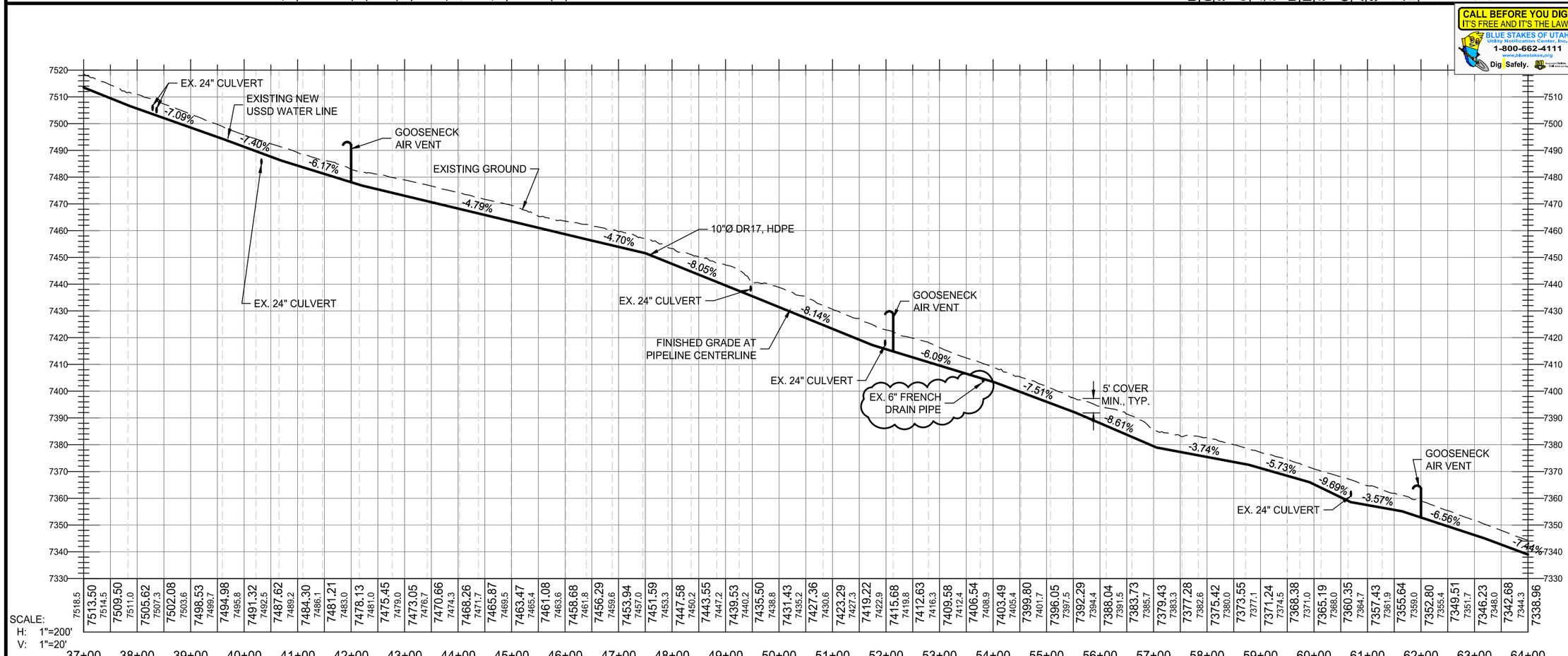


SCALE:
H: 1"=200'
V: 1"=20'

CALL BEFORE YOU DIG. IT'S FREE AND IT'S THE LAW.
BLUE STAKES OF UTAH
Utility Notification Center, Inc.
1-800-662-4111
www.bluestakes.org
Dig Safely.

| NO. | DATE | DESIGN REV. BY | MAPS CORR. BY | PARCELS AFFECTED | REQUEST BY | REMARKS |
|---|---|---|---|---|---|---|
| 1 | 11/18/16 | | | | | REVISIONS ADDED WITH ADDENDUM #1 |
| | | | | | | ORIGINAL SUBMISSION FOR AUTHORIZATION |

REVISIONS

SCALE: | DWG NAME: WP-02 | DWG CREATED: 2016/05/31 | UPDATED: 11/18/2016

Jones & DeMille Engineering, Inc.
CIVIL ENGINEERING - SURVEYING - TESTING
GIS - ENVIRONMENTAL
1.800.748.5275 www.jonesanddemille.com

DESIGN: JA 15-10 CHECK: CF 15-10 REVIEW
DRAWN: KJ 16-05 CHECK: BB 15-10 DATE: .

APPROVAL RECOMM: DATE PROJECT DESIGN ENGINEER
APPROVED:

PACIFICORP
DEER CRK MINE WTR RELIEF PIPE
WATER PLAN & PROFILE SHEET

EMERY
COUNTY

SHEET NO. WP-02

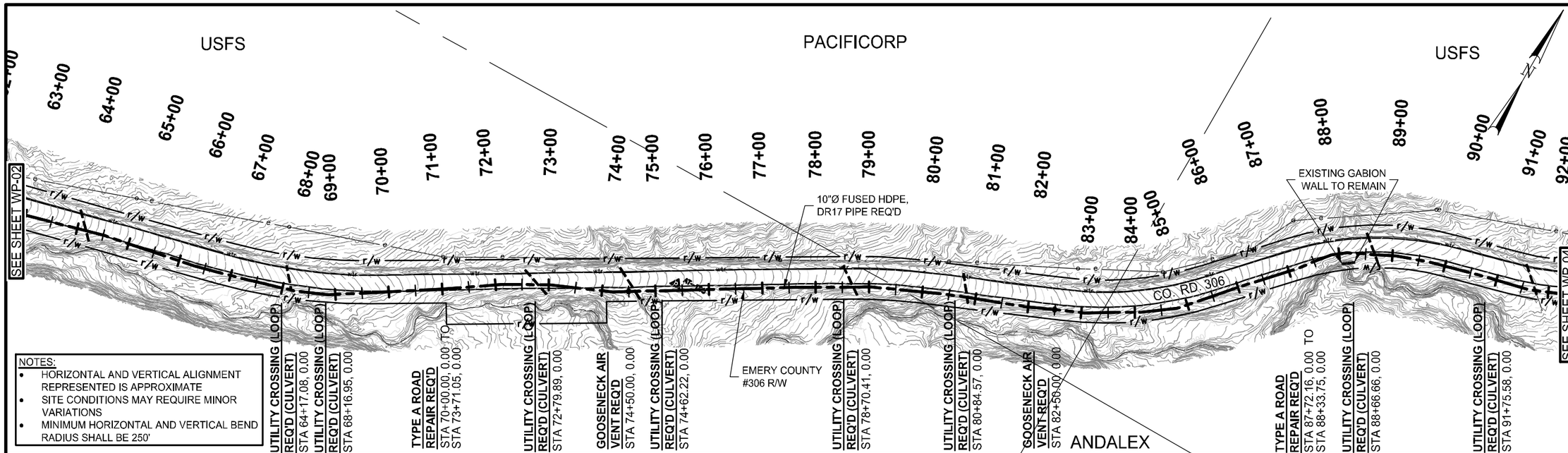


NOTES:
- HORIZONTAL AND VERTICAL ALIGNMENT REPRESENTED IS APPROXIMATE
- SITE CONDITIONS MAY REQUIRE MINOR VARIATIONS
- MINIMUM HORIZONTAL AND VERTICAL BEND RADIUS SHALL BE 250'

CALL BEFORE YOU DIG. IT'S FREE AND IT'S THE LAW.
BLUE STAKES OF UTAH Utility Notification Center, Inc.
1-800-662-4111
www.bluestakes.org
Dig Safely.

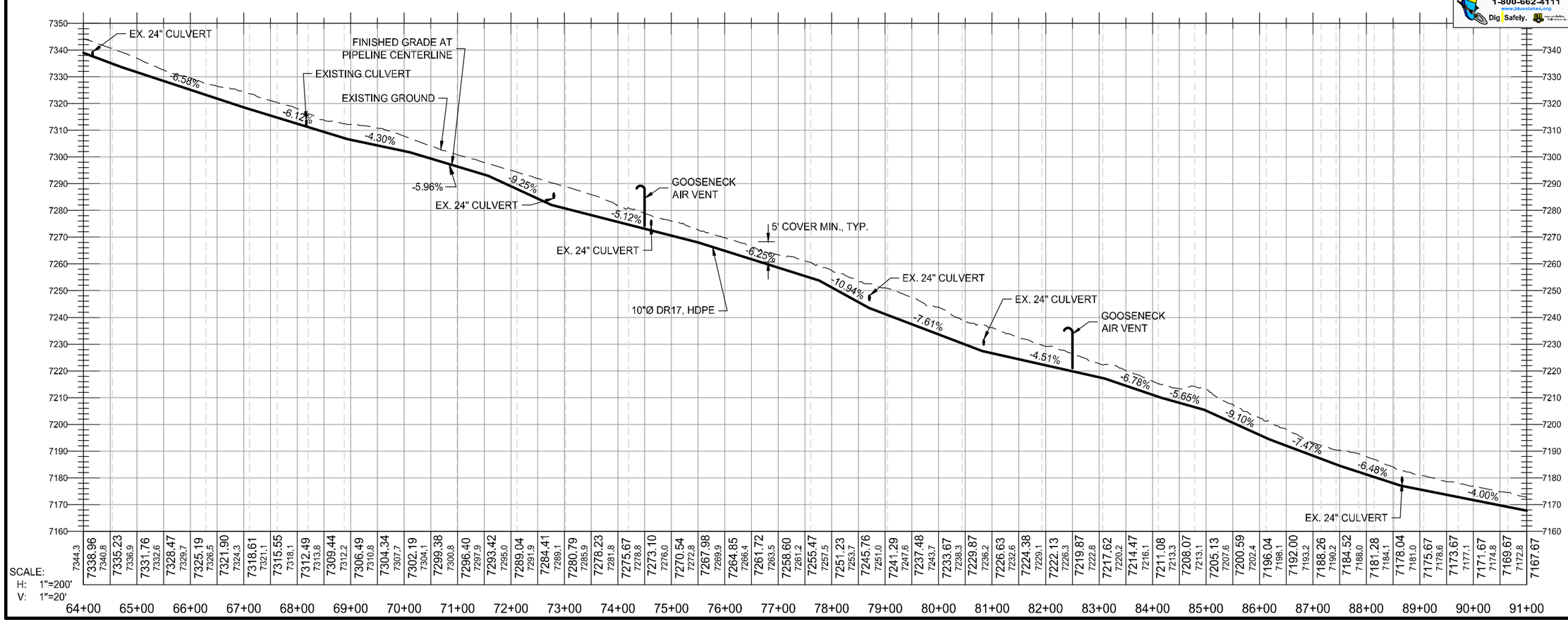


| NO. | DATE | DESIGN REV. BY | MAPS CORR. BY | PARCELS EFFECTED | REQUES'D BY | REMARKS |
|---|---|---|---|---|---|---|
| | | | | | | |

ORIGINAL SUBMISSION FOR AUTHORIZATION

REVISIONS

SCALE: 1" = 200'

DWG NAME: WP-03
SHT SET: 1506-121P

DWG CREATED: 2016/05/31
PEN TBL: 1sinch42x2800.ctb

UPDATED: 10/19/2016
PLOTTED: 11/4/2016

Jones & DeMille Engineering, Inc.
CIVIL ENGINEERING - SURVEYING - TESTING
GIS - ENVIRONMENTAL
1.800.748.5275 www.jonesanddemille.com

| | | | | | |
|---|---|---|---|---|---|
| DESIGN: | JA | 15-10 | CHECK: | CF | 15-10 |
| DRAWN: | TT | 16-05 | CHECK: | BB | 15-10 |
| QUANT: | JA | 15-10 | CHECK: | CF | 15-10 |

REVIEW
DATE: -
BY: -

APPROVAL RECOMM: DATE PROJECT DESIGN ENGINEER
APPROVED: DATE

PACIFICORP

DEER CRK MINE WTR RELIEF PIPE

WATER PLAN & PROFILE SHEET

PROJECT NUMBER: 1506-121

EMERY COUNTY

SHEET NO. WP-03

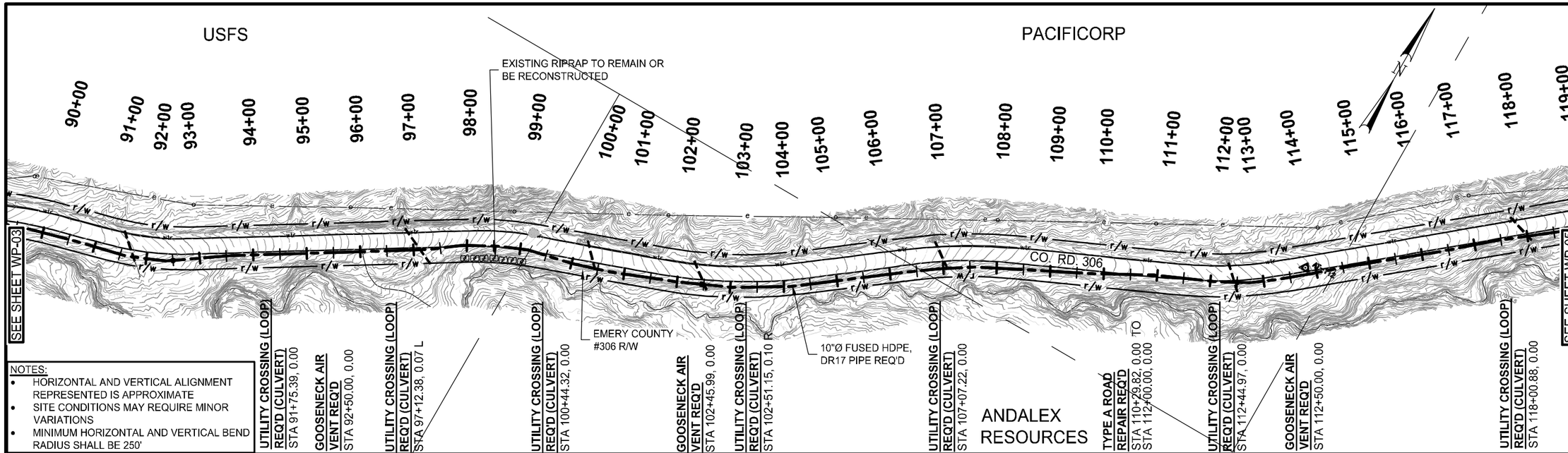


NOTES:

- HORIZONTAL AND VERTICAL ALIGNMENT REPRESENTED IS APPROXIMATE
- SITE CONDITIONS MAY REQUIRE MINOR VARIATIONS
- MINIMUM HORIZONTAL AND VERTICAL BEND RADIUS SHALL BE 250'

CALL BEFORE YOU DIG. IT'S FREE AND IT'S THE LAW.
BLUE STAKES OF UTAH Utility Notification Center, Inc.
1-800-662-4111
www.bluestakes.org
Dig Safely.

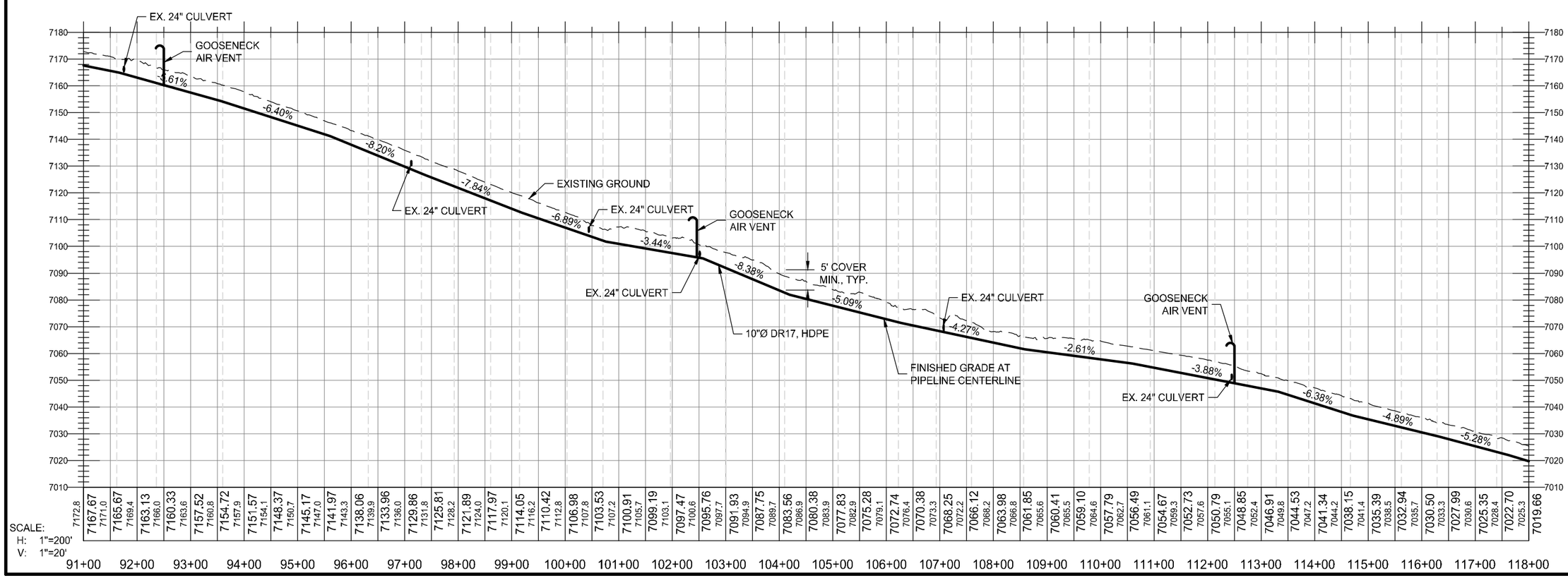


SCALE:
H: 1"=200'
V: 1"=20'

| NO. | DATE | DESIGN REV. BY | MAPS CORR. BY | PARCELS AFFECTED | REQUIES BY | REMARKS |
|---|---|---|---|---|---|---|
| | | | | | | |

REVISIONS

ORIGINAL SUBMISSION FOR AUTHORIZATION

SCALE: 1" = 200'
DWG NAME: WP-04
SHT SET: 1506-121P
DWG CREATED: 2016/05/31
PEN TBL: 1sinch42800.ctb
UPDATED: 10/19/2016
PLOTTED: 11/4/2016

Jones & DeMille Engineering, Inc.
CIVIL ENGINEERING - SURVEYING - TESTING
GIS - ENVIRONMENTAL
1.800.748.5275 www.jonesanddemille.com

| | | | |
|---|---|---|---|
| DESIGN: | JA | 15-10 | REVIEW |
| DRAWN: | TT | 16-05 | CHECK: CF 15-10 |
| QUANT: | JA | 15-10 | CHECK: BB 15-10 |
| | | | CHECK: CF 15-10 |

APPROVAL RECOMM: DATE PROJECT DESIGN ENGINEER
APPROVED: DATE

PACIFICORP

DEER CRK MINE WTR RELIEF PIPE

WATER PLAN & PROFILE SHEET

PROJECT NUMBER: 1506-121

EMERY
COUNTY

SHEET NO. WP-04

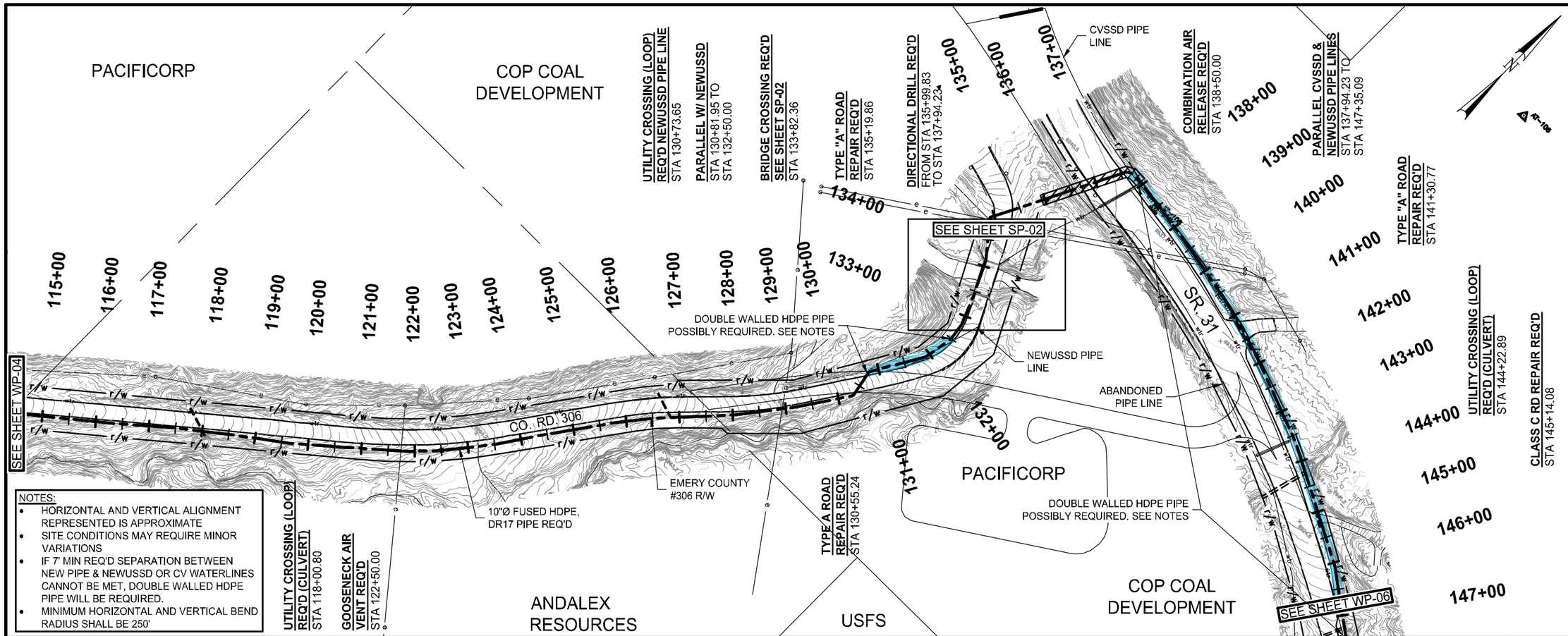


NOTES:

- HORIZONTAL AND VERTICAL ALIGNMENT REPRESENTED IS APPROXIMATE
- SITE CONDITIONS MAY REQUIRE MINOR VARIATIONS
- IF 7' MIN REQ'D SEPARATION BETWEEN NEW PIPE & NEWUSSD OR CV WATERLINES CANNOT BE MET, DOUBLE WALLED HDPE PIPE WILL BE REQUIRED.
- MINIMUM HORIZONTAL AND VERTICAL BEND RADIUS SHALL BE 250'

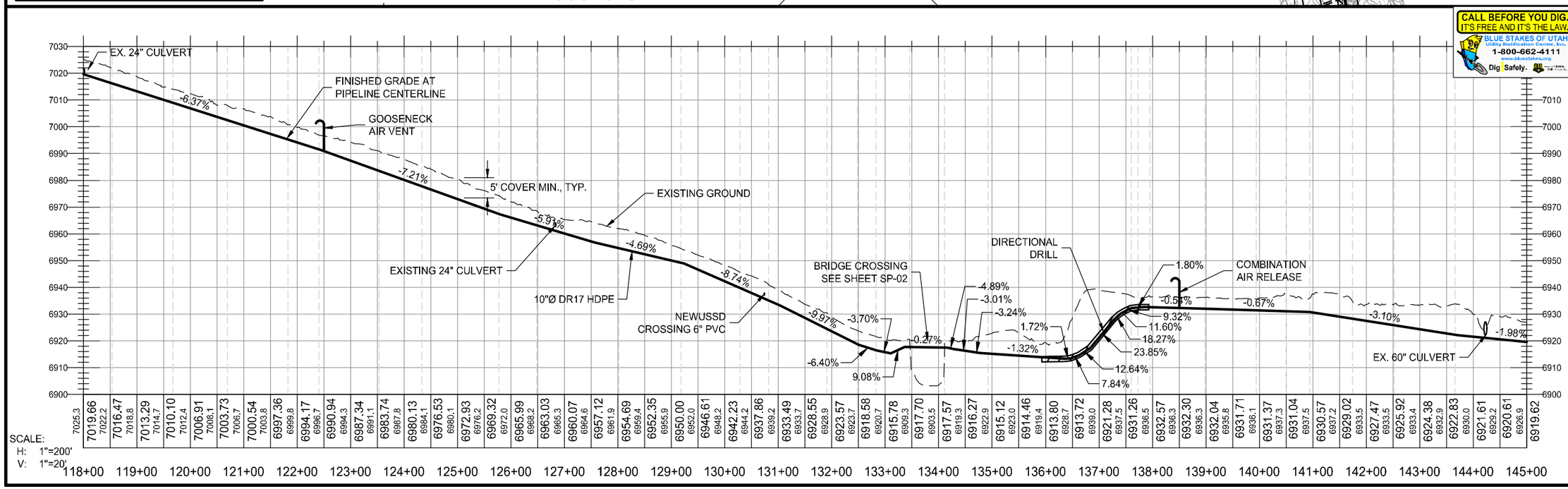


Jones & DeMille Engineering, Inc.
CIVIL ENGINEERING - SURVEYING - TESTING
GIS - ENVIRONMENTAL
1.800.748.5275 www.jonesanddemille.com

| NO. | DATE | DESIGN REV. BY | MAPS CORR. BY | PARCELS AFFECTED | REQUES BY | REMARKS |
|---|---|---|---|---|---|---|
| | | ORIGINAL SUBMISSION FOR AUTHORIZATION | | | | |

REVISIONS

SCALE: 1" = 200'
DWG NAME: WP-05
SHT SET: 1505-21P
DWG CREATED: 2016/05/31
PEN TBL: 1sfnc1b42800.ctb
UPDATED: 10/19/2016
PLOTTED: 11/4/2016

| | | | |
|---|---|---|---|
| DESIGN: | JA | 15-10 | REVIEW |
| DRAWN: | TT | 16-05 | CHECK: CF 15-10 |
| QUANT: | JA | 15-10 | CHECK: BB 15-10 |
| | | | CHECK: CF 15-10 |

DATE: -
BY: -

APPROVAL RECOMM: DATE PROJECT DESIGN ENGINEER
APPROVED: DATE

PACIFICORP
DEER CRK MINE WTR RELIEF PIPE
WATER PLAN & PROFILE SHEET
PROJECT NUMBER: 1506-121

EMERY COUNTY

SHEET NO. WP-05

NOTES:

- HORIZONTAL AND VERTICAL ALIGNMENT REPRESENTED IS APPROXIMATE
- SITE CONDITIONS MAY REQUIRE MINOR VARIATIONS
- IF 7' MIN REQ'D SEPARATION BETWEEN NEW PIPE & NEWUSSD OR CV WATERLINES CANNOT BE MET, DOUBLE WALLED HDPE PIPE WILL BE REQUIRED.
- MINIMUM HORIZONTAL AND VERTICAL BEND RADIUS SHALL BE 250'

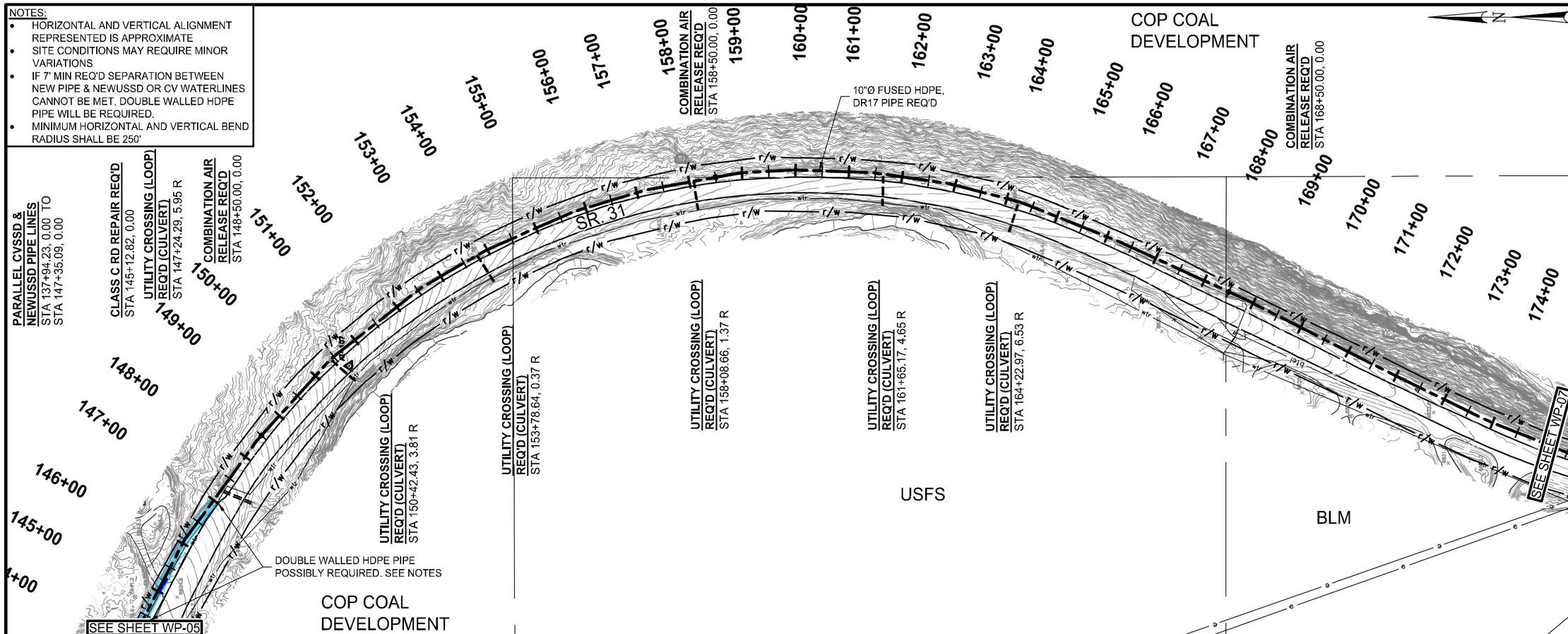


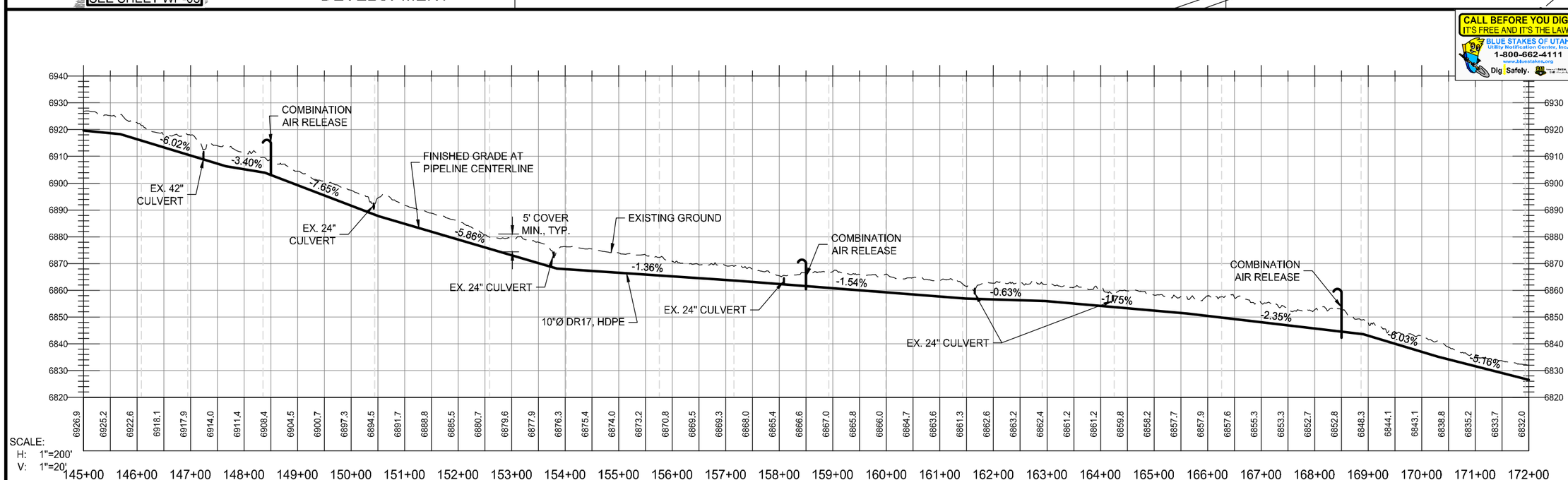


CALL BEFORE YOU DIG. IT'S FREE AND IT'S THE LAW.
BLUE STAKES OF UTAH Utility Notification Center, Inc.
1-800-662-4111
www.bluestakes.org
Dig Safely.

| NO. | DATE | DESIGN REV. BY | MAPS CORR. BY | PARCELS AFFECTED | REQUES' BY | REMARKS |
|---|---|---|---|---|---|---|
| | | | | | | |

ORIGINAL SUBMISSION FOR AUTHORIZATION

REVISIONS

SCALE: 1" = 200'

DWG NAME: WP-06
SHT SET: 1506-121P

DWG CREATED: 2016/05/31
PEN TBL: 1sinch42800.ctb

UPDATED: 10/19/2016
PLOTTED: 11/4/2016

Jones & DeMille Engineering, Inc.
CIVIL ENGINEERING - SURVEYING - TESTING
GIS - ENVIRONMENTAL
1.800.748.5275 www.jonesanddemille.com

| | | | |
|---|---|---|---|
| DESIGN: | JA | 15-10 | CHECK: CF 15-10 REVIEW |
| DRAWN: | TT | 16-05 | CHECK: BB 15-10 DATE: - |
| QUANT: | JA | 15-10 | CHECK: CF 15-10 BY: - |

APPROVAL RECOMM. DATE PROJECT DESIGN ENGINEER

APPROVED DATE

PACIFICORP

DEER CRK MINE WTR RELIEF PIPE

WATER PLAN & PROFILE SHEET

PROJECT NUMBER: 1506-121

EMERY
COUNTY

SHEET NO. WP-06

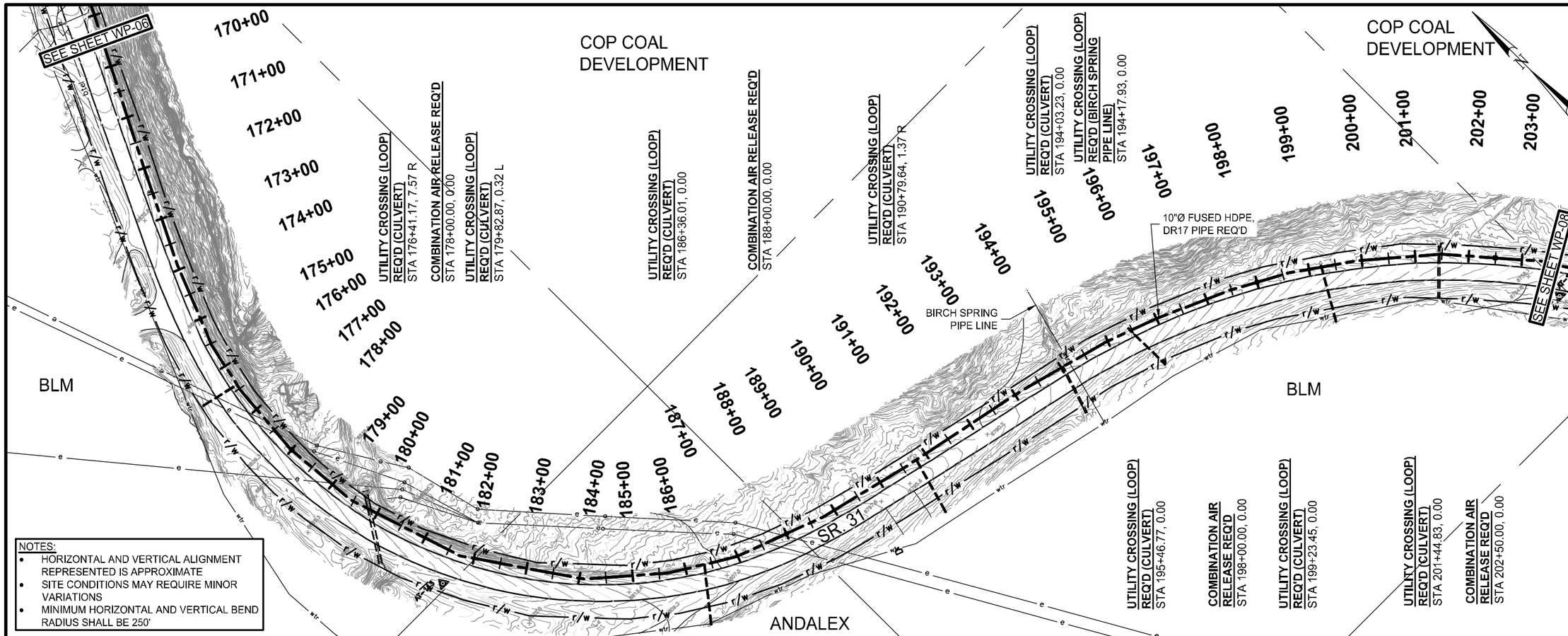


NOTES:

- HORIZONTAL AND VERTICAL ALIGNMENT REPRESENTED IS APPROXIMATE
- SITE CONDITIONS MAY REQUIRE MINOR VARIATIONS
- MINIMUM HORIZONTAL AND VERTICAL BEND RADIUS SHALL BE 250'

CALL BEFORE YOU DIG.
IT'S FREE AND IT'S THE LAW.
BLUE STAKES OF UTAH
Utility Notification Center, Inc.
1-800-662-4111
www.bluestakes.org
Dig Safely.

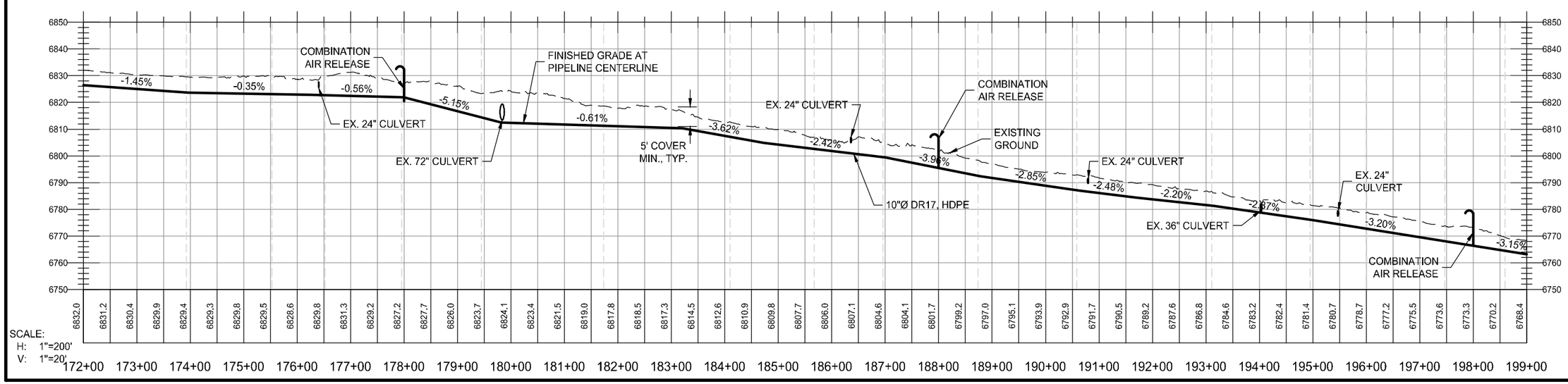


SCALE:
H: 1"=200'
V: 1"=20'

| NO. | DATE | DESIGN REV. BY | MAPS CORR. BY | PARCELS AFFECTED | REQUES' BY | REMARKS |
|---|---|---|---|---|---|---|
| | | ORIGINAL SUBMISSION FOR AUTHORIZATION | | | | |

REVISIONS

SCALE: 1" = 200'
DWG NAME: WP-07
SHT SET: 1506-121P
DWG CREATED: 2016/05/31
PEN TBL: 1sinch24x22800.ctb
UPDATED: 10/19/2016
PLOTTED: 11/4/2016

Jones & DeMille Engineering, Inc.
CIVIL ENGINEERING - SURVEYING - TESTING
GIS - ENVIRONMENTAL
1.800.748.5275 www.jonesanddemille.com

| | | | |
|---|---|---|---|
| DESIGN: | JA 15-10 | CHECK: | CF 15-10 |
| DRAWN: | TT 16-05 | CHECK: | BB 15-10 |
| QUANT: | JA 15-10 | CHECK: | CF 15-10 |

REVIEW
DATE: -
BY: -

APPROVAL RECOMM: DATE PROJECT DESIGN ENGINEER
APPROVED: DATE

PACIFICORP
DEER CRK MINE WTR RELIEF PIPE
WATER PLAN & PROFILE SHEET
PROJECT NUMBER: 1506-121

EMERY
COUNTY

SHEET NO. WP-07

NOTES:
- HORIZONTAL AND VERTICAL ALIGNMENT REPRESENTED IS APPROXIMATE
- SITE CONDITIONS MAY REQUIRE MINOR VARIATIONS
- MINIMUM HORIZONTAL AND VERTICAL BEND RADIUS SHALL BE 250'

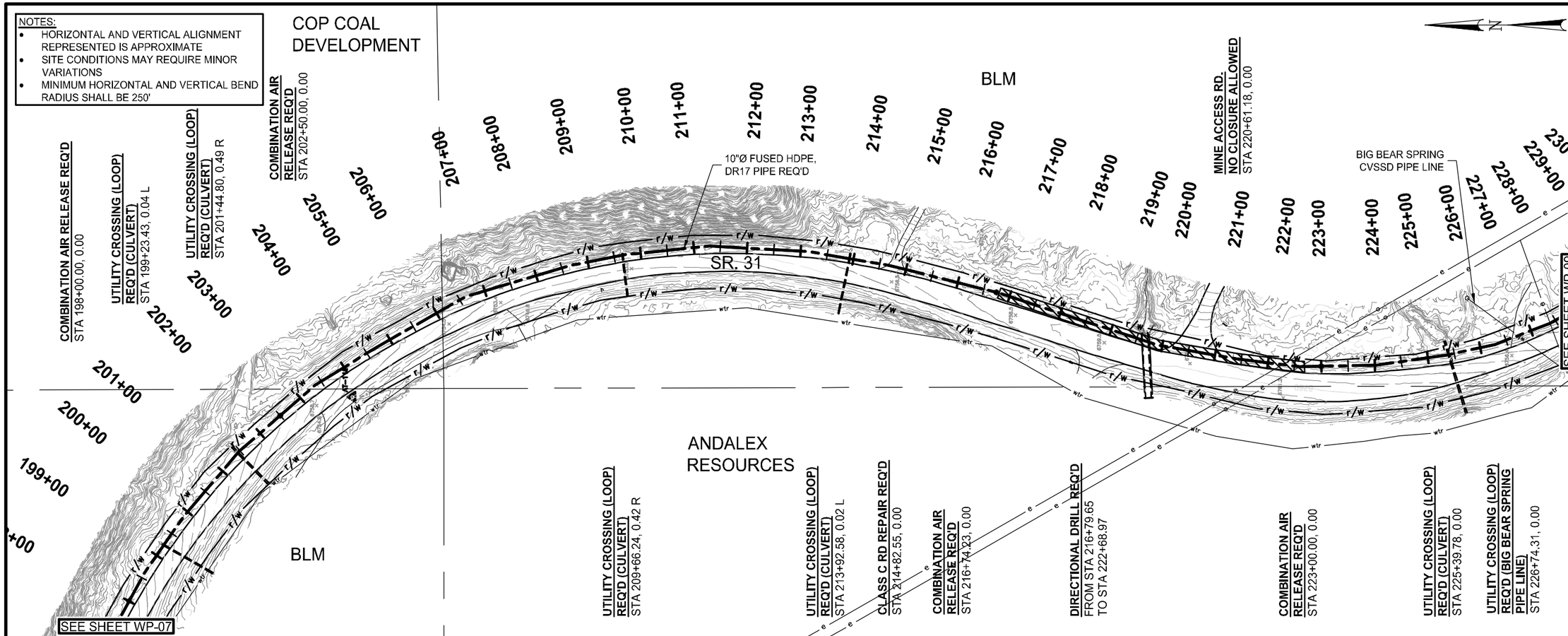


CALL BEFORE YOU DIG. IT'S FREE AND IT'S THE LAW.
BLUE STAKES OF UTAH Utility Notification Center, Inc. 1-800-662-4111 www.bluestakes.org Dig Safely.

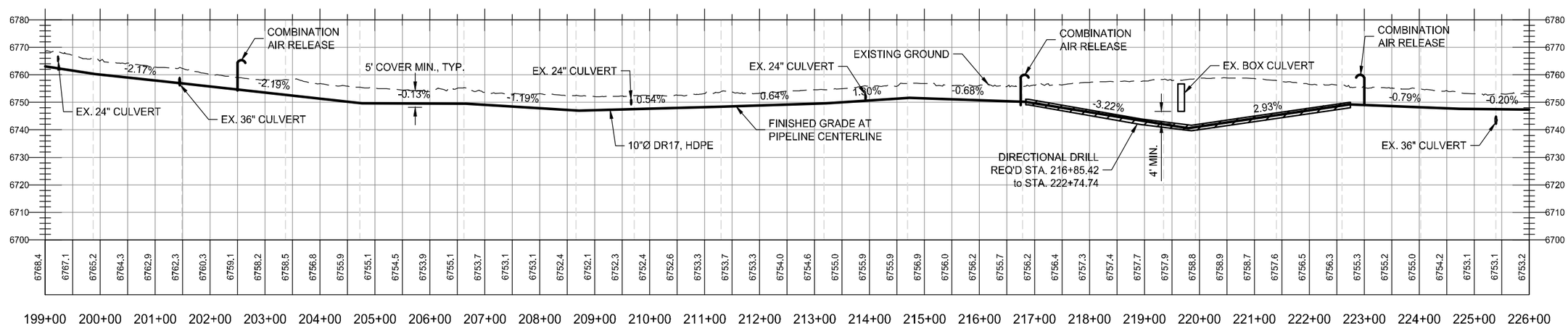


SCALE:
H: 1"=200'
V: 1"=20'

| NO. | DATE | DESIGN REV. BY | MAPS CORR. BY | PARCELS REQUES' BY | REMARKS |
|---|---|---|---|---|---|
| | | ORIGINAL SUBMISSION FOR AUTHORIZATION | | | |

REVISIONS

SCALE: 1" = 200'
DWG NAME: WP-08
SHT SET: 1506-121P
DWG CREATED: 2016/05/31
PEN TBL: 1sinch42800.ctb
UPDATED: 10/19/2016
PLOTTED: 11/4/2016

Jones & DeMille Engineering, Inc.
CIVIL ENGINEERING - SURVEYING - TESTING
GIS - ENVIRONMENTAL
1.800.748.5275 www.jonesandmille.com

| | | | | |
|---|---|---|---|---|
| DESIGN: | JA | 15-10 | CHECK: | CF 15-10 |
| DRAWN: | TT | 16-05 | CHECK: | BB 15-10 |
| QUANT: | JA | 15-10 | CHECK: | CF 15-10 |

REVIEW
DATE:
BY:

APPROVAL RECOMM: DATE
PROJECT DESIGN ENGINEER
APPROVED: DATE

PACIFICORP
DEER CRK MINE WTR RELIEF PIPE
WATER PLAN & PROFILE SHEET
PROJECT NUMBER: 1506-121

EMERY
COUNTY

SHEET NO. WP-08

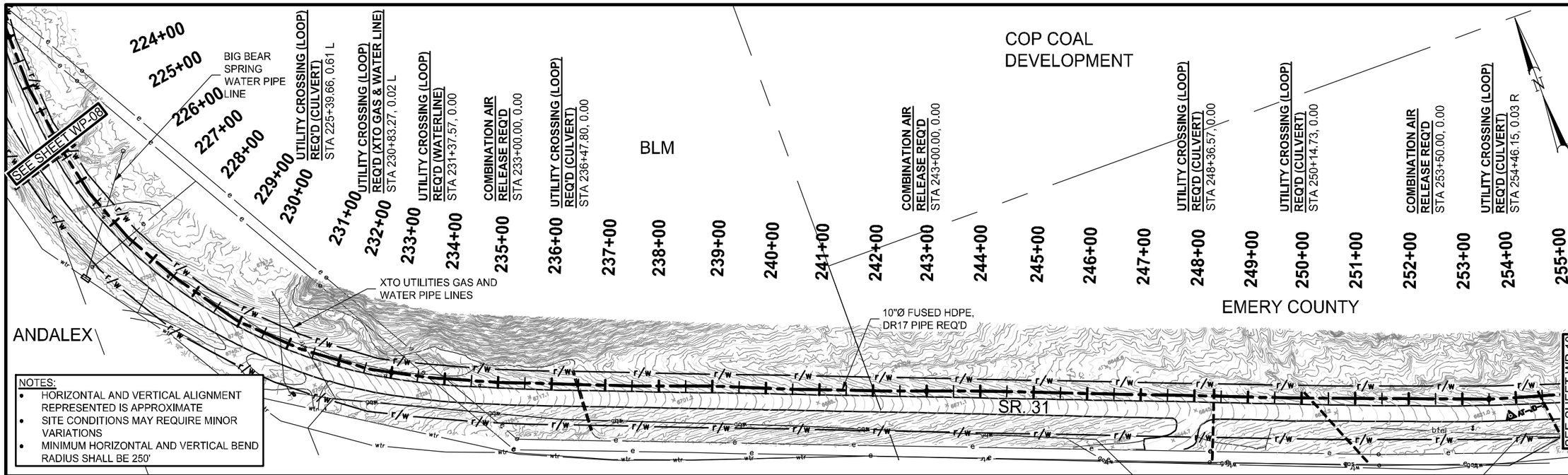


CALL BEFORE YOU DIG.
IT'S FREE AND IT'S THE LAW.
BLUE STAKES OF UTAH
Utility Notification Center, Inc.
1-800-662-4111
www.bluestakes.org
Dig Safely.

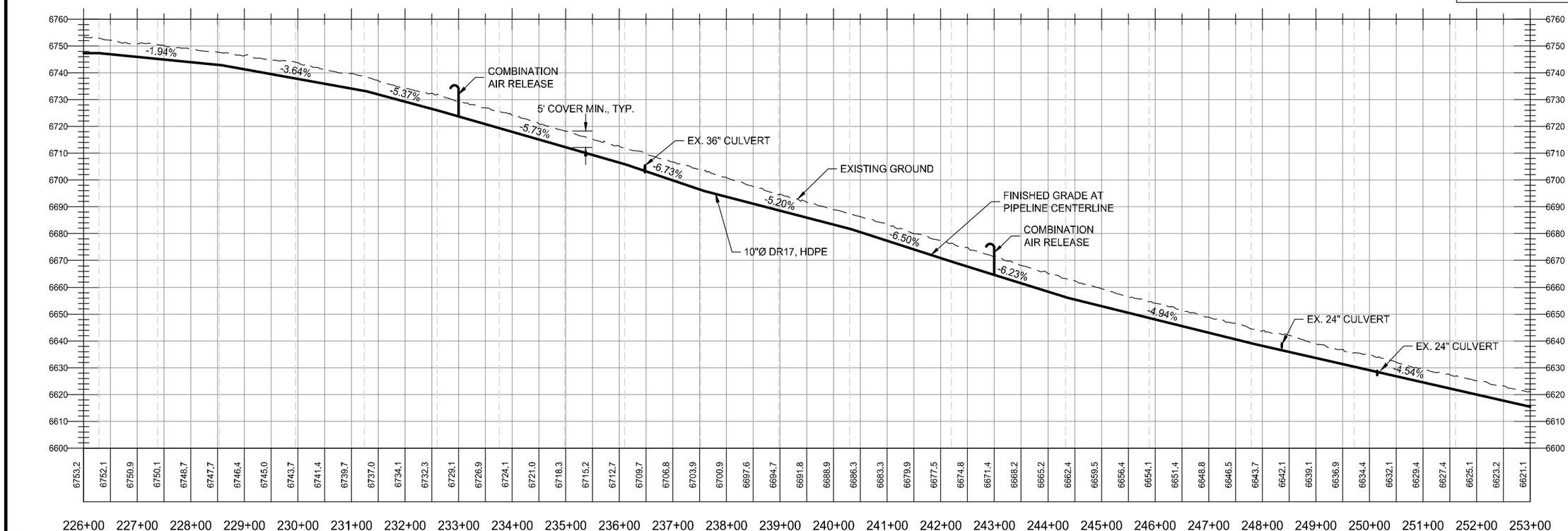


SCALE:
H: 1"=200'
V: 1"=20'

| NO. | DATE | DESIGN REV. BY | MAPS CORR. BY | PARCELS AFFECTED | REQUEST BY | REMARKS |
|---|---|---|---|---|---|---|
| | | | | | | |

ORIGINAL SUBMISSION FOR AUTHORIZATION

REVISIONS

SCALE: 1" = 200'
DWG NAME: WP-09
SHT SET: 1506-121P
DWG CREATED: 2016/05/31
PEN TBL: 1sinc04c2800.ctb
UPDATED: 10/19/2016
PLOTTED: 11/4/2016

Jones & DeMille Engineering, Inc.
CIVIL ENGINEERING - SURVEYING - TESTING
GIS - ENVIRONMENTAL
1.800.748.5275 www.jonesandmille.com

| | | | |
|---|---|---|---|
| DESIGN: | JA | 15-10 | CF |
| DRAWN: | TT | 16-05 | BB |
| QUANT: | JA | 15-10 | CF |

REVIEW
DATE: -
BY: -

APPROVAL RECOMM. DATE PROJECT DESIGN ENGINEER
APPROVED: DATE

PACIFICORP
DEER CRK MINE WTR RELIEF PIPE
WATER PLAN & PROFILE SHEET
PROJECT NUMBER: 1506-121

EMERY COUNTY

SHEET NO. WP-09

NOTES:
- HORIZONTAL AND VERTICAL ALIGNMENT REPRESENTED IS APPROXIMATE
- SITE CONDITIONS MAY REQUIRE MINOR VARIATIONS
- MINIMUM HORIZONTAL AND VERTICAL BEND RADIUS SHALL BE 250'

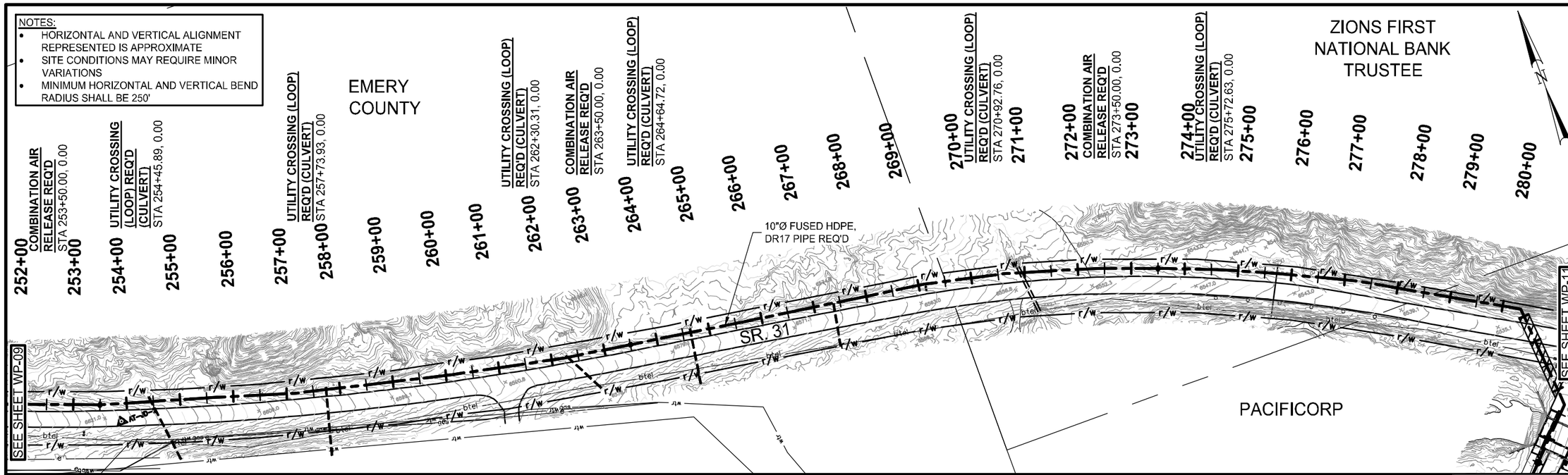


CALL BEFORE YOU DIG.
IT'S FREE AND IT'S THE LAW.
BLUE STAKES OF UTAH
Utility Notification Center, Inc.
1-800-662-4111
www.bluestakes.org
Dig Safely.

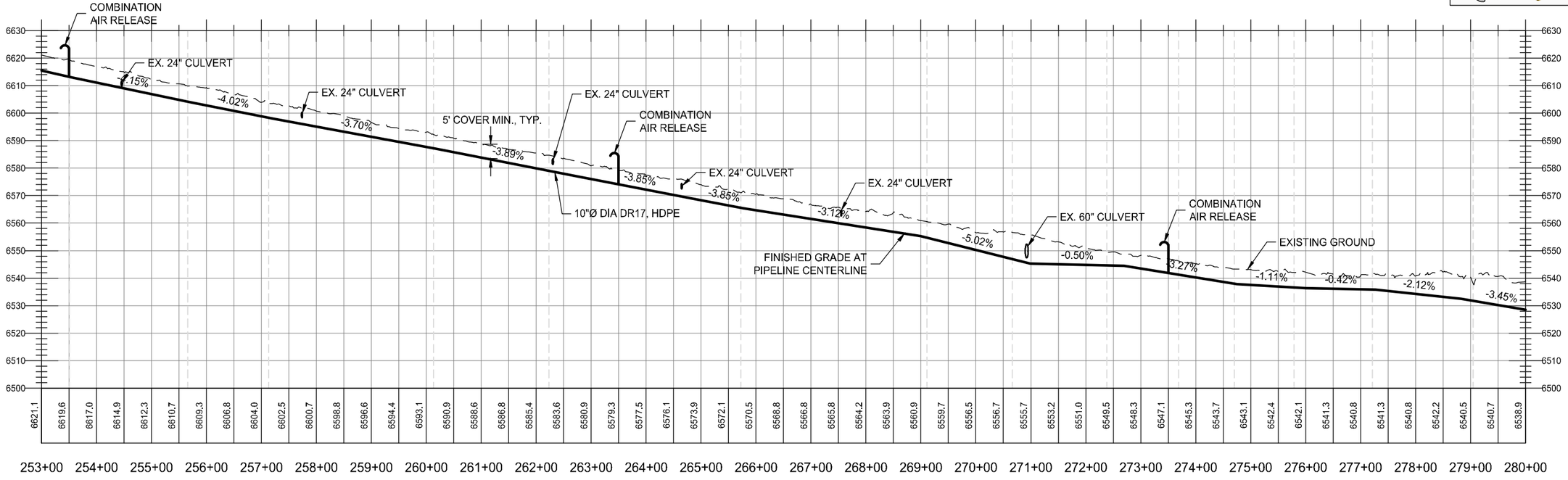


SCALE:
H: 1"=200'
V: 1"=20'

| NO. | DATE | DESIGN REV. BY | MAPS CORR. BY | PARCELS AFFECTED | REQUEST BY | REMARKS |
|---|---|---|---|---|---|---|
| | | | | | | |

ORIGINAL SUBMISSION FOR AUTHORIZATION

REVISIONS

SCALE: 1" = 200'
DWG NAME: WP-10
SHT SET: 1506-121P
DWG CREATED: 2016/05/31
PEN TBL: 1sinc1842800.ctb
UPDATED: 10/19/2016
PLOTTED: 11/4/2016

Jones & DeMille Engineering, Inc.
CIVIL ENGINEERING - SURVEYING - TESTING
GIS - ENVIRONMENTAL
1.800.748.5275 www.jonesanddemille.com

| | | | |
|---|---|---|---|
| DESIGN: | JA | 15-10 | CF |
| DRAWN: | TT | 16-05 | BB |
| QUANT: | JA | 15-10 | CF |

| | | | |
|---|---|---|---|
| CHECK: | CF | 15-10 | REVIEW |
| CHECK: | BB | 15-10 | DATE: |
| CHECK: | CF | 15-10 | BY: |

APPROVAL RECOMM: DATE PROJECT DESIGN ENGINEER
APPROVED: DATE

PACIFICORP
DEER CRK MINE WTR RELIEF PIPE
WATER PLAN & PROFILE SHEET
PROJECT NUMBER: 1506-121

EMERY COUNTY

SHEET NO. WP-10

NOTES:
- HORIZONTAL AND VERTICAL ALIGNMENT REPRESENTED IS APPROXIMATE
- SITE CONDITIONS MAY REQUIRE MINOR VARIATIONS
- IF 7' MIN REQ'D SEPARATION BETWEEN NEW PIPE & NEWUSSD OR CV WATERLINES CANNOT BE MET, DOUBLE WALLED HDPE PIPE WILL BE REQUIRED.
- MINIMUM HORIZONTAL AND VERTICAL BEND RADIUS SHALL BE 250'

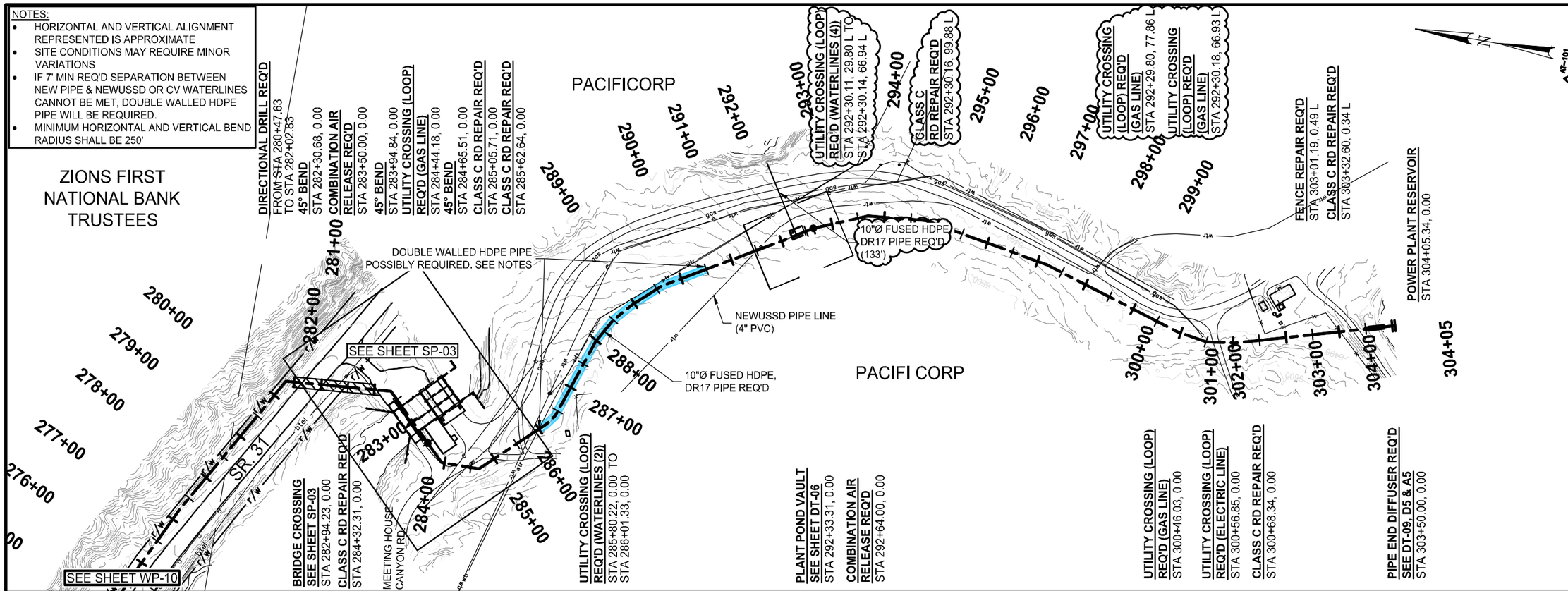


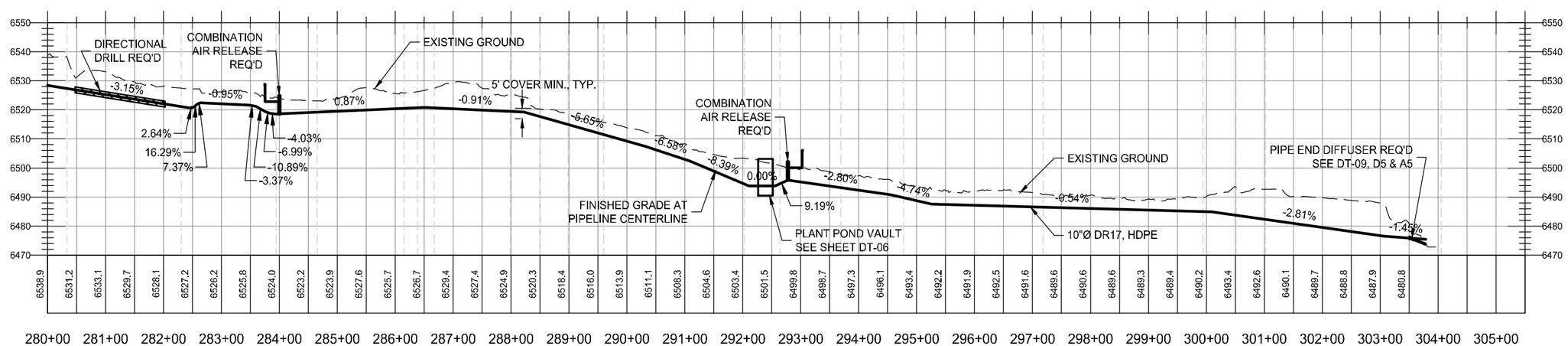


SCALE:
H: 1"=200'
V: 1"=20'

CALL BEFORE YOU DIG. IT'S FREE AND IT'S THE LAW.
BLUE STAKES OF UTAH Utility Notification Center, Inc. 1-800-662-4111 www.bluestakes.org
Dig Safely.

| NO. | DATE | DESIGN REV. BY | MAPS CORR. BY | PARCELS AFFECTED | REQUIES BY | REMARKS |
|---|---|---|---|---|---|---|
| 1 | 11/8/16 | | | | | REVISIONS ADDED WITH ADDENDUM #1 |

ORIGINAL SUBMISSION FOR AUTHORIZATION

REVISIONS

SCALE: 1" = 200'
DWG NAME: WP-11
SHT SET: 1506-121P
DWG CREATED: 2016/05/31
PEN TBL: 1sinch40-2800.ctb
UPDATED: 11/22/2016
PLOTTED: 11/22/2016

Jones & DeMille Engineering, Inc.
CIVIL ENGINEERING - SURVEYING - TESTING
GIS - ENVIRONMENTAL
1.800.748.5275 www.jonesanddemille.com

DESIGN: JA 15-10 CHECK: CF 15-10 REVIEW
DRAWN: TT 16-05 CHECK: BB 15-10 DATE: .
QUANT: JA 15-10 CHECK: CF 15-10 BY: .

APPROVAL RECOMM. DATE PROJECT DESIGN ENGINEER
APPROVED. DATE

PACIFICORP
DEER CRK MINE WTR RELIEF PIPE
WATER PLAN & PROFILE SHEET
PROJECT NUMBER: 1506-121

EMERY COUNTY

SHEET NO. WP-11

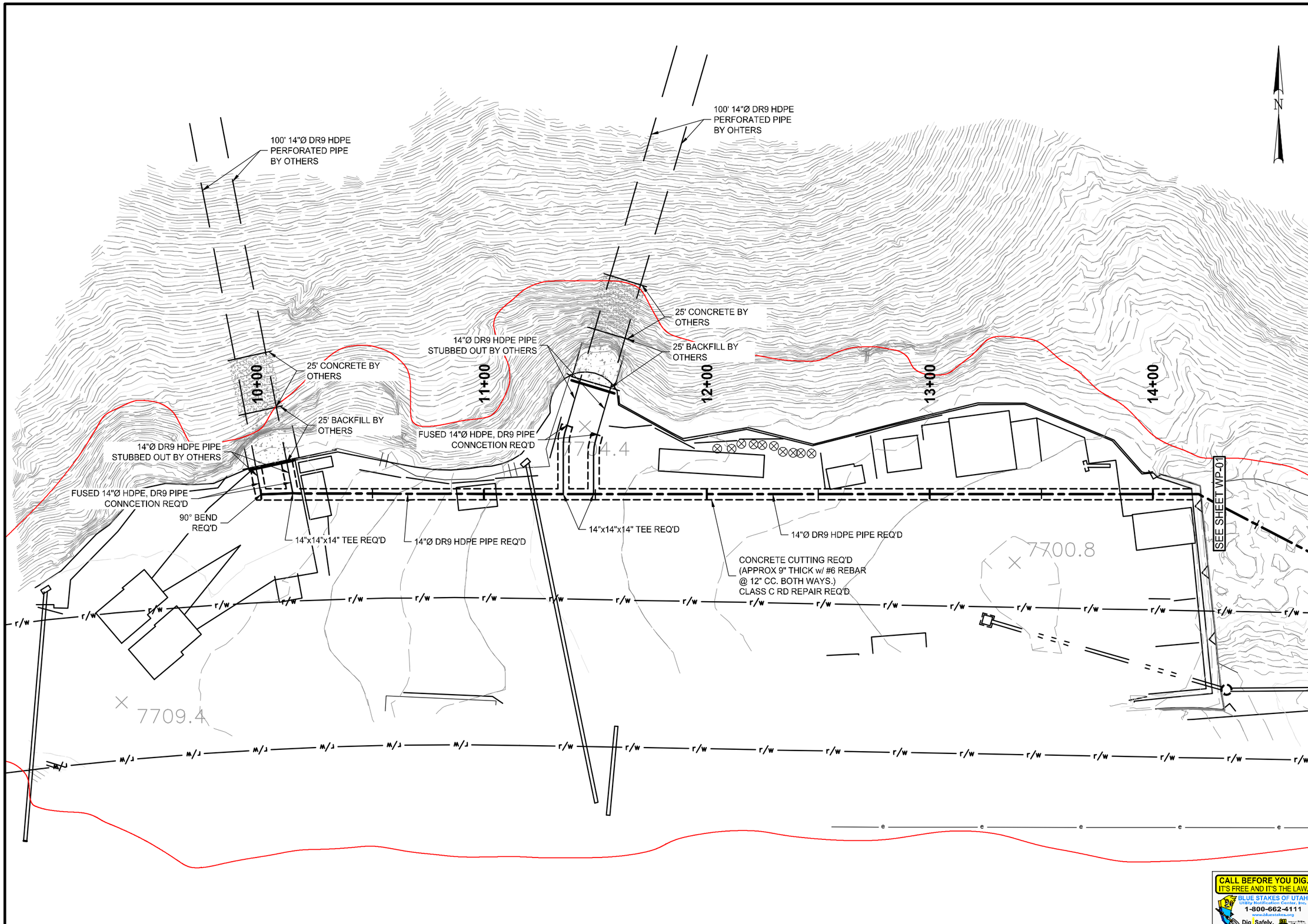


CALL BEFORE YOU DIG.
IT'S FREE AND IT'S THE LAW.
BLUE STAKES OF UTAH
Utility Notification Center, Inc.
1-800-662-4111
www.bluestakes.org
Dig Safely.

| NO. | DATE | DESIGN REV. BY | MAPS CORR. BY | PARCELS AFFECTED | REQUES'D BY | REMARKS |
|---|---|---|---|---|---|---|
| | | ORIGINAL SUBMISSION FOR AUTHORIZATION | | | | |

REVISIONS

SCALE: 1" □ 40'

DWG NAME: SP-01_PIPE
SHT SET: 1506-121P

DWG CREATED: 2016/05/31
PEN TBL: 1sinch40-2800.ctb

UPDATED: 10/19/2016
PLOTTED: 11/4/2016

Jones & DeMille Engineering, Inc.
CIVIL ENGINEERING - SURVEYING - TESTING
GIS - ENVIRONMENTAL
1.800.748.5275 www.jonesanddemille.com

| | | | REVIEW |
|---|---|---|---|
| DESIGN: | JA | 15-10 | CHECK: CF 15-10 |
| DRAWN: | TT | 16-05 | CHECK: BB 15-10 |
| QUANT: | JA | 15-10 | CHECK: CF 15-10 |

DATE: -
BY: -

PROJECT DESIGN ENGINEER
DATE
APPROVAL RECOMM.
APPROVED
DATE

PACIFICORP

DEER CRK MINE WTR RELIEF PIPE

SITE PLAN

PROJECT NUMBER: 1506-121

EMERY
COUNTY

SHEET NO. SP-01

HEAT/TRACER TAPE
PULL BOX REQ'D

CORE CUT REQ'D

134+00

RILDA BRIDGE CROSSING REQ'D
SEE DT-07 & DT-08 FOR DETAIL

Existing Bridge

Existing NEWUSSD
Waterline

HUNTINGTON CREEK

HEAT/TRACER TAPE
PULL BOX REQ'D

CORE CUT REQ'D

133+00

RILDA CANYON ROAD

NOTE:
PULL BOX TO BE STANDARD UTILITY BOX
WITH TRAFFIC RATING

CALL BEFORE YOU DIG.
IT'S FREE AND IT'S THE LAW.
BLUE STAKES OF UTAH
Utility Notification Center, Inc.
1-800-662-4111
www.bluestakes.org
Dig Safely.

| NO. | DATE | DESIGN REV. BY | MAPS CORR. BY | PARCELS AFFECTED | REQUEST BY | REMARKS |
|---|---|---|---|---|---|---|
| | | ORIGINAL SUBMISSION FOR AUTHORIZATION | | | | |

REVISIONS

SCALE: 1" = 20'

DWG NAME: SP-02_PPE
SHT SET: 1506-21P

DWG CREATED: 2016/05/31
PEN TBL: 1sinch40-2800.ctb

UPDATED: 10/19/2016
PLOTTED: 11/4/2016

Jones & DeMille Engineering, Inc.
CIVIL ENGINEERING - SURVEYING - TESTING
GIS - ENVIRONMENTAL
1.800.748.5275 www.jonesanddemille.com

| | | | |
|---|---|---|---|
| DESIGN: | JA | 15-10 | CHECK: CF 15-10 |
| DRAWN: | TT | 16-05 | CHECK: BB 15-10 |
| QUANT: | JA | 15-10 | CHECK: CF 15-10 |

REVIEW
DATE: -
BY: -

APPROVAL RECOMM: DATE PROJECT DESIGN ENGINEER
APPROVED: DATE

PACIFICORP
DEER CRK MINE WTR RELIEF PIPE
SITE PLAN
PROJECT NUMBER: 1506-121

EMERY
COUNTY

SHEET NO. SP-02

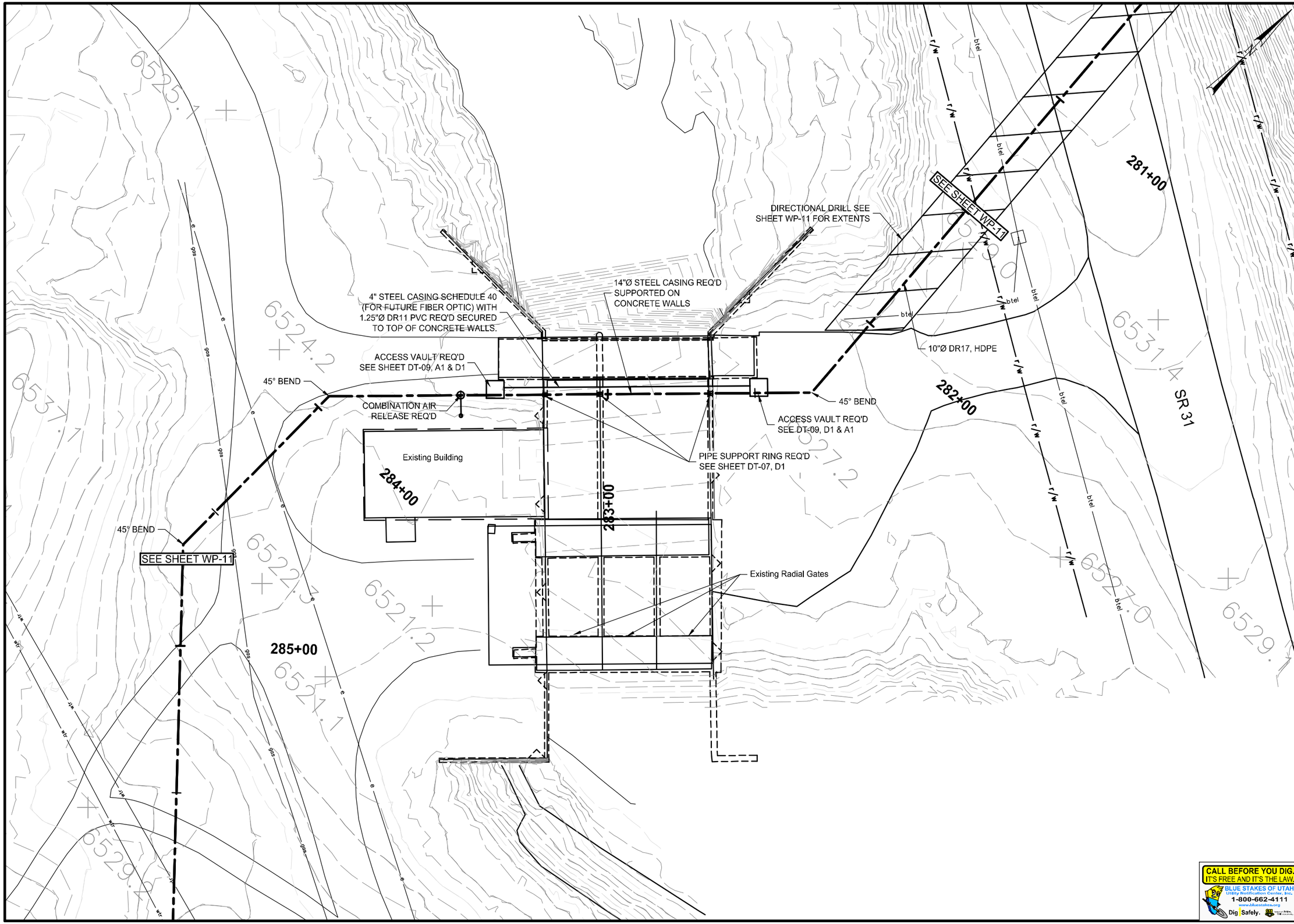


CALL BEFORE YOU DIG.
IT'S FREE AND IT'S THE LAW.
BLUE STAKES OF UTAH
Utility Notification Center, Inc.
1-800-662-4111
www.bluestakes.org
Dig Safely.

| NO. | DATE | DESIGN REV. BY | MAPS CORR. BY | PARCELS AFFECTED | REQUES'D BY | REMARKS |
|---|---|---|---|---|---|---|
| | | | | | | |

REVISIONS

SCALE: 1" □30'

DWG NAME: SP-03_PPE
SHT SET: 1505-21P

DWG CREATED: 2016/05/31
PEN TBL: 1sinch40-2800.ctb

UPDATED: 10/19/2016
PLOTTED: 11/4/2016

Jones & DeMille Engineering, Inc.
CIVIL ENGINEERING - SURVEYING - TESTING
GIS - ENVIRONMENTAL
1.800.748.5275 www.jonesanddemille.com

| | | | |
|---|---|---|---|
| DESIGN: | JA | 15-10 | CHECK: CF 15-10 |
| DRAWN: | TT | 16-05 | CHECK: BB 15-10 |
| QUANT: | JA | 15-10 | CHECK: CF 15-10 |

REVIEW
DATE: -
BY: -

PROJECT DESIGN ENGINEER
DATE
APPROVAL RECOMM.
APPROVED
DATE

PACIFICORP
DEER CRK MINE WTR RELIEF PIPE
SITE PLAN
PROJECT NUMBER: 1506-121

EMERY
COUNTY

SHEET NO. SP-03

# PacifiCorp

# Deer Creek Mine

# C/015/0018

**Amendment to Add a Post-Mining Water Discharge at Rilda Canyon Portals, Permit Area Change to Include Discharge Pipeline Route and Potential Treatment Facility Area, PacifiCorp, Deer Creek Mine, C/015/0018, Emery County, Utah**

**<u>Volume 11B, Appendix Volume, Hydrology Appendix</u>**

**Replace Map 700-4**

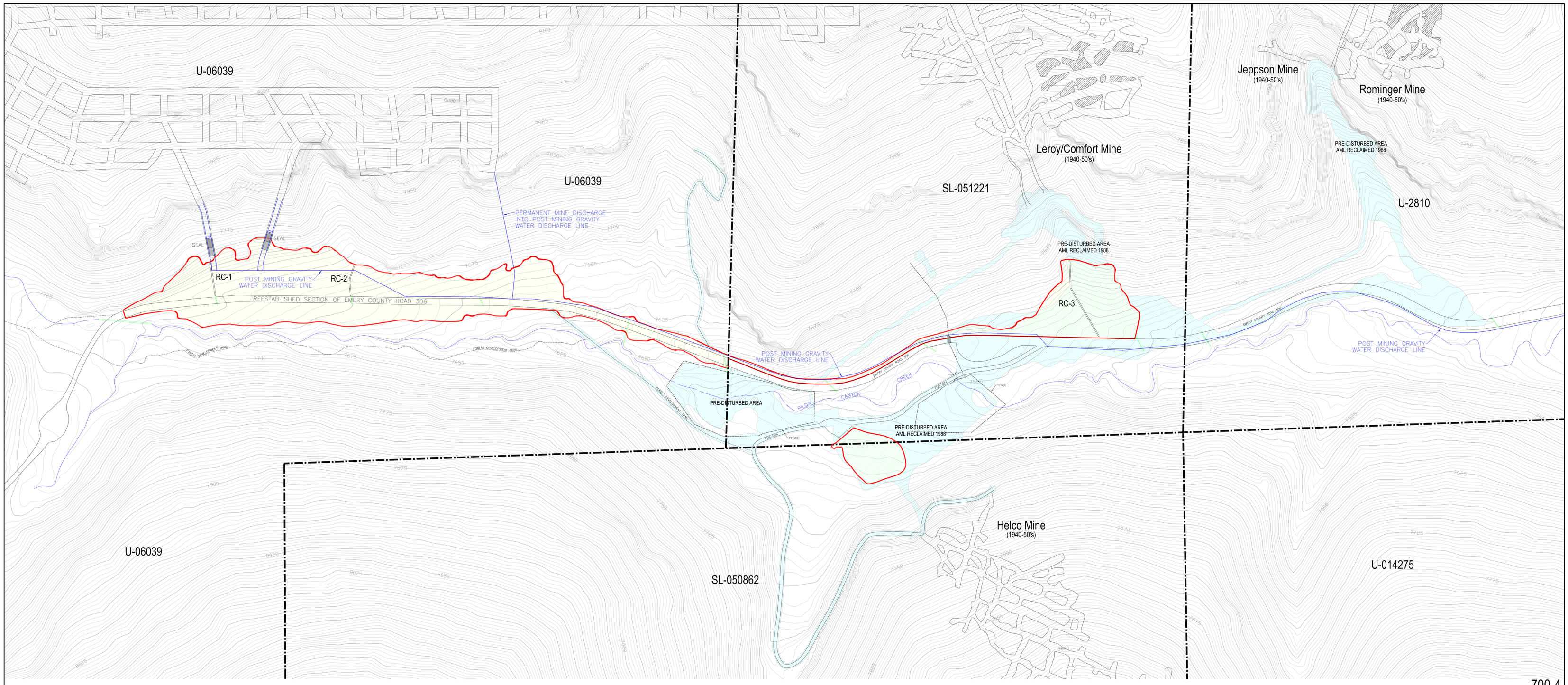


## LEGEND

- RECLAIMED CHANNEL
- CULVERT LOCATIONS
- DISTURBED/RECLAIMED AREA BOUNDARY
- RECLAIMED AREA
- PRE-DISTURBED AREA (AML RECLAIMED 1988)
  OF THE 7.28 TOTAL DISTURBED ACRES, 1.79 ACRES ARE ON LAND PRE-DISTURBED BY HISTORICAL MINE SITES. THE PRE-DISTURBED LAND IS 24.6% OF THE TOTAL DISTURBED AT THE RILDA CANYON PORTAL FACILITIES.

LICENSED PROFESSIONAL ENGINEER
JOHN CHRISTENSEN
No. 165651
STATE OF UTAH

| DATE | REVISION | BY | CHK |
|---|---|---|---|
| 6-3-10 | REVISED DISTURBED AREA BOUNDARIES, AND FINAL RECLAMATION TOPOGRAPHY | KJL | |
| 5-23-05 | ADDED FOREST DEVELOPMENT ROAD 024 | KJL | |

CAD FILE NAME/DISK#: 700-4

700-4

PACIFICORP
A MIDAMERICAN ENERGY HOLDINGS COMPANY

DEER CREEK MINE
RILDA CANYON FACILITIES
RECLAMATION HYDROLOGY MAP

DRAWN BY: K. LARSEN
SCALE: 1" = 100'
DRAWING #: 700-4
DATE: NOVEMBER 12, 2004
SHEET 1 OF 1
REV. 5

# PacifiCorp

# Deer Creek Mine

# C/015/0018

**Amendment to Add a Post-Mining Water Discharge at Rilda Canyon Portals, Permit Area Change to Include Discharge Pipeline Route and Potential Treatment Facility Area, PacifiCorp, Deer Creek Mine, C/015/0018, Emery County, Utah**

**<u>Volume 12, R645-301-700 Hydrology</u>**

**Replace entire chapter**

# R645-301-700 HYDROLOGIC SECTION

## TABLE OF CONTENTS

**R645-301-710. INTRODUCTION ..... 1**

R645-301-711. GENERAL REQUIREMENTS ..... 2
R645-301-712. CERTIFICATION ..... 2
R645-301-713. INSPECTION ..... 2

**R645-301-720. ENVIRONMENTAL DESCRIPTION ..... 2**

R645-301-721. GENERAL REQUIREMENTS ..... 2
A. EXISTING GROUNDWATER RESOURCES ..... 3
*1. Regional Groundwater Hydrology ..... 3*
*2. Regional Geology ..... 3*
*3. Regional Groundwater Characteristics ..... 7*
Flagstaff Limestone ..... 8
a. North Horn Formation ..... 8
b. Upper Price River Formation ..... 9
c. Castlegate Sandstone ..... 9
d. Blackhawk Formation ..... 9
e. Star Point Sandstone ..... 13
f. Structural Hydrologic Features ..... 15
g. Alluvial Aquifers ..... 16
*4. Springs and Seeps ..... 19*
*5. Groundwater Quality ..... 22*
*6. Chemical Evolution of Groundwater (excerpt from Mayo & Associates Study - Appendix B) ..... 26*
a. Chemical Reactions ..... 26
*7. Solute Compositions ..... 27*
a. Streams ..... 27
(1) Crandall Canyon Drainage ..... 27
(2) Mill Fork Canyon Drainage ..... 28
(3) Rilda Canyon Drainage ..... 28
b. Springs ..... 28
c. In-Mine Groundwater ..... 30
(1) Blackhawk Formation ..... 30
(2) Spring Canyon Member ..... 31
(3) Joes Valley Fault System ..... 32
*8. $\delta^{2}H$ and $\delta^{18}O$ ..... 32*
*9. Groundwater Ages ($^{3}H$ and $^{14}C$) ..... 33*
*10. Active and ~~In-Active~~Inactive Groundwater Zones ..... 34*
*11. Regional Groundwater Systems ..... 37*
*12. Summary of 2001 Mayo & Associates Study ..... 38*
*13. Conclusions from 2001 Mayo & Associates Study ..... 38*
*14. Mine Dewatering ..... 39*
*15. Groundwater Rights and Users ..... 40*

a. North Emery Water Users ~~Association~~ Special Services District ..... 40
b. Little Bear Spring ..... 40
(1) Groundwater Flow Mechanisms ..... 42
(2) Mill Fork Leasing Process ..... 44
B. EXISTING SURFACE RESOURCES ..... 46
*1. Regional and ~~Permit~~ Mining Area Surface Water Hydrology ..... 46*
a. ~~Permit~~ Lease Area Watershed Characteristics ..... 48
(1) Huntington Creek Drainage System ..... 49
(a) Crandall Creek ..... 49
(b) Mill Fork Canyon ..... 50
(c) Right Fork of Rilda Canyon ..... 50
(2) Cottonwood Creek Drainage System ..... 51
(a) Un-Named Tributaries to Indian Creek ..... 51
b. Water Quality and Quantity ..... 51
(1). Huntington Creek Drainage System ..... 52
(a) Huntington Creek ..... 52
(b) Crandall Creek ..... 53
(c) Mill Fork Canyon Creek ..... 53
(d) Rilda Canyon Creek ..... 54
(2) Cottonwood Creek Drainage System ..... 55
(a) Cottonwood Canyon Creek ..... 56
(b) Indian Creek ..... 56
*2. Soil Loss - Sediment Yield ..... 57*
R645-301-723. SAMPLING AND ANALYSIS ..... 59
R645-301-724. BASELINE INFORMATION ..... 59
1. GROUNDWATER ..... 59
2. SURFACE WATER ..... 60
*R645-301-724.100. GROUNDWATER INFORMATION ..... 60*
*R645-301-724.200. SURFACE WATER INFORMATION ..... 60*
*R645-301-724.300. GEOLOGIC INFORMATION ..... 61*
*R645-301-724.400. CLIMATOLOGICAL INFORMATION ..... 61*
*A. PRECIPITATION ..... 61*
*B. TEMPERATURES ..... 61*
*C. WINDS ..... 61*
*R645-301-724.600. SURVEY OF RENEWABLE RESOURCES LANDS ..... 62*
*R645-301-724.700. ALLUVIAL VALLEY FLOORS ..... 62*
*A. SCOPE ..... 62*
*B. SITE DESCRIPTION ..... 62*
*C. ALLUVIAL VALLEY FLOOR CHARACTERISTICS ..... 63*
*D. GEOMORPHIC CRITERIA ..... 63*
*E. FLOOD IRRIGATION ..... 63*
*F. SUB-IRRIGATION ..... 63*
*G. ALLUVIAL VALLEY FLOOR IDENTIFICATION ..... 64*
*H. POTENTIAL IMPACTS OF ALLUVIAL VALLEY FLOORS ..... 64*
R645-301-725. BASELINE CUMULATIVE IMPACT AREA INFORMATION ..... 64
R645-301-728. PROBABLE HYDROLOGIC CONSEQUENCES (PHC) DETERMINATION ..... 64
A. DESCRIPTION OF THE MINING OPERATION ..... 65
B. GEOLOGY ..... 65
C. MINING METHODS ..... 65
D. SURFACE WATER SYSTEM ..... 66
E. HYDROLOGIC BALANCE - SURFACE WATER SYSTEM ..... 66
F. MITIGATION AND CONTROL PLANS ..... 67
G. SURFACE MONITORING PLAN ..... 68
H. GROUNDWATER SYSTEM ..... 68
I. HYDROLOGIC BALANCE - GROUNDWATER ..... 71

*1. Subsidence: Perched Aquifer Systems above the Mine Horizon ..... 71*
*2. Mining in the Rilda Canyon Area-NEWU~~A~~SSD Springs ..... 73*
*3. Mining in the Mill Fork Area - Little Bear Spring ..... 73*
*4. Interception of Groundwater by Mine Workings ..... 74*
a. Depletion Of Storage ..... 75
(1) Fluvial Sandstone Channel Systems ..... 75
(2) Geologic Structures Including Folding, Faults And Fractures ..... 76
b. Quality ..... 79
c. Quantity ..... 80
d. Post Mining ..... 80
1) Mill Fork Area/Rilda Canyon Post Mine Closure ..... 81
2) Post Mining Water Quality Analysis – Total Iron: ..... 84
3) Identified Hydrologic Concerns of the Mill Fork Lease Area: ..... 84
4) Water Chemistry Assessment of the Mill Fork Area: ..... 85
5) Remedial Approaches to Mitigating Potentially Elevated Iron Water Mine Water Discharge: ..... 86
6) National Environmental Policy Act (NEPA) permitting process: ..... 92
7) DOGM Pipeline Permitting Issues and Concerns: ..... 94
8) Potential Post Mine Closure Interbasin Transfer: ..... 101
R645-301-729 CUMULATIVE HYDROLOGIC IMPACT ASSESSMENT (CHIA) ..... 101

**R645-301-730 OPERATION PLAN ..... 101**

R645-301-731. GENERAL REQUIREMENTS ..... 101
*R645-301-731.100. HYDROLOGIC BALANCE PROTECTION ..... 102*
*A. GROUNDWATER PROTECTION ..... 102*
*B. SURFACE WATER PROTECTION ..... 102*
*R645-301-731.200. WATER MONITORING ..... 102*
*A. GROUNDWATER ..... 102*
1. East Mountain Springs - Mill Fork ..... 102
2. In-Mine ..... 104
*B. SURFACE WATER ..... 105*
*R645-301-731.500. DISCHARGES ..... 105*
*R645-301-731.520. GRAVITY DISCHARGES from UNDERGROUND COAL MINING AND RECLAMATION ACTIVITIES 105*
*R645-301-731.300. ACID AND TOXIC-FORMING MATERIALS ..... 106*
*R645-301-731.530. State Appropriated Water Supply ..... 106*
*R645-301-731.600. STREAM BUFFER ZONES ..... 107*
*R645-301-731.700. CROSS SECTION AND MAPS ..... 107*
*R645-301-731.800. WATER RIGHTS AND REPLACEMENT ..... 107*
1. North Emery Water Users ~~Association~~ Special Services District ..... 108
2. Little Bear Spring ..... 108
R645-301-732 - 764. SEDIMENT CONTROL ..... 109
R645-301-748, 755, 765. CASING AND SEALING OF WELLS ..... 109
R645-301-751. WATER QUALITY STANDARDS AND EFFLUENT LIMITATIONS ..... 109
R645-301-760. RECLAMATION ..... 109

## LIST OF APPENDICES

**Appendix A** Hydrologic Monitoring Program Water Sample Documentation (Refer to Volume 9 Appendix A)

**Appendix B** Mill Fork Hydrologic Investigation - Mayo & Associates

**Appendix C** Mill Fork Spring and Seep Survey 2000-2001 (separate volume) (Includes 2002 Field Data)

**Appendix D** Post Mine Closure Hydrologic Analysis

- Geochemical Evaluation of Groundwater with Elevated Iron (Mayo & Associates, 2015)
- Potential for Acid Mine Drainage (Peterson Hydrologic, 2016)
- Iron Blending Sensitivity Analysis
  - Base Case 11th – 17th West
    - Analyzed three separate flow rates from 11th – 17th West (no flow from 7th North) and three total iron start values
  - Base Case at Raw Water Pond @ 7,000 gpm Diversion
    - Analyzed three separate flow rates from 11th – 17th West (no flow from 7th North) and two total iron values for the raw water
  - Base Case at Raw Water Pond @ 3,500 gpm Diversion
    - Analyzed three separate flow rates from 11th – 17th West (no flow from 7th North) and two total iron values for the raw water
  - 11th – 17th West and 7th North Total Iron Blending
    - Analyzed three separate flow rates 11th – 17th West and 7th North and three total iron start values for 11th – 17th West, 7th North Total Iron start value based on regression analysis
  - Base Case at Raw Water Pond @ 7,000 gpm Diversion
    - Analyzed three separate flow rates from 11th – 17th West and 7th North, three separate total iron start values for 11th – 17th West and two separate total iron values for the raw water
  - Base Case at Raw Water Pond @ 3,500 gpm Diversion
    - Analyzed three separate flow rates from 11th – 17th West and 7th North, three separate total iron start values for 11th – 17th West and two separate total iron values for the raw water
- Sediment/Goethite Production Huntington Plant Raw Water Pond

- Sediment Load
- Goethite Load from Mine
- Sediment Load versus Goethite Production

- 7th North Sump Discharge January 2016 through December 2016
- Deer Creek In-Mine Sealed Area Water Quality Analysis: 2012 - 2016
- Deer Creek In-Mine Sealed Area Water Quality Graphs: 2012 - 2016
- Huntington Creek HCC01 Water Quality Analysis 1990 - 2016
- Sierra Club/HEAL Utah Objection Response December 21, 2016
- Sediment and Goethite Loading Report (Peterson, 2017)

**Appendix E Deer Creek Mine Closure Water Pipeline**
**UTU-91700 and PRI-1606 – Final Environmental Assessment**

- Final Environmental Assessment
- Draft FONSI
- Hydrology Report
- Peterson Hydrology Report
- Biological Resource Report

## LIST OF FIGURES

**MFHF-1** **Location Map - Mine Permit Boundaries**

**MFHF-2** **Stratigraphy of East Mountain**

**MFHF-3** **Relationship of Precipitation to Stratigraphic Control of Groundwater Flow: East Mountain**

**MFHF-4** **Stratigraphic Location of Springs - East Mountain**

**MFHF-5** **Elevation vs. Total Dissolved Solids of Springs**

**MFHF-6** **Potentiometric Surface of the Spring Canyon Member, Star Point Sandstone**

# LIST OF TABLES

**MFHT-1** **Modes of Occurrence - East Mountain Springs - Mill Fork Area**

**MFHT-2** **East Mountain Springs - Mill Fork Area: Water Rights Data**

**MFHT-3** **East Mountain Springs - Mill Fork Area: Seasonal Flow Variation**

**MFHT-4** **East Mountain - Seasonal Flow Variation: Southern East Mountain Compared to Mill Fork Area**

**MFHT-5** **East Mountain Springs - Mill Fork Area: Baseline Quality (major cations/anions)**

## LIST OF MAPS

**MFS1830D East Mountain Property - Mill Fork Area Hydrologic Map (includes Water Rights)**

~~**MFS1831D East Mountain Property - Mill Fork Area Spring Map**~~

~~**MFS1832D East Mountain Property - Water Rights Map**~~

**MFS1851D East Mountain Property - Hydrologic Monitoring Map**

**MFU1902D Deer Creek Mine Closure Sequencing Environmental Inspection Map**

**MFU1904D Deer Creek Mine Hydrology Map**

**MFU1905D Deer Creek Mine Water Diversion Structures/Portal Plugs**

## LIST OF REFERENCES

**Danielson, T.W.; Remillard, M.D.; Fuller, R.H., Hydrology of the Coal-Resource areas in the Upper Drainages of Huntington and Cottonwood Creeks, Central Utah; U.S. Geological Survey-Water Resource Investigations, Open-File Report 81539.**

**Doelling, H.H., 1972, Wasatch Plateau Coal Fields, *in* Doelling, H.H. (ed.), Central Utah Coal Fields; Sevier-Sanpete, Wasatch Plateau, Book Cliffs and Emery, Utah Geological and Mineralogical Survey Monograph Series No. 3, Salt Lake City, Utah.**

**Graham, M.J.; Tooley, J.E.; Price, D., Preliminary Hydrological Evaluation of the North Horn Mountain Coal-Resource Area, Utah, U.S. Geological Survey, Open-File Report 81141.**

**Lines, G.C., The Ground-water System and Possible Effects of Underground Coal Mining in the Trail Mountain Area, Central Utah, U.S. Geological Survey, Open-File Report 84067.**

**Kadnuck, L. M., Response of Springs to Longwall Coal Mining at the Deer Creek and Cottonwood Mines, Wasatch Plateau, UT, Bureau of Mines Information Circular 9405/1994.**

**Mayo, A. L., Peterson, E.C., Surface-water and groundwater investigation and Probable Consequences of coal mining the Mill Fork Lease, Mayo & Associates, LC, October 2001.**

**Price, D.; Arnow, T., Summary Appraisals of the Nation's Groundwater Resources-Upper Colorado Region, U.S. Geological Survey Professional Paper 813-C, Washington, D.C.**

**Raleigh Consultants, 1992, Manti-La Sal National Forest, Level II Riparian Inventory, Huntington Creek Tributaries.**

**LIST OF REFERENCES FOR LITTLE BEAR SPRING**
**(On file at Division of Oil, Gas and Mining - Salt Lake City)**

**Christenson, G. E., 1984, Effects of coal mining at Huntington Canyon No. 4 Mine on Little Bear Spring, Emery County, Utah, Harty, K. M., compiler, Utah Geological and Mineral Survey Report of Investigation No. 198, Technical reports for 1984, Site Investigation Section, Utah Geological and Mineral Survey, Salt Lake City, Utah.**

**Hansen, Allen and Luce, Inc., March 1997, Genwal Resources- Probable Hydrologic Consequences Evaluation of LBA 11.**

**Mayo and Associates, March 1997, Results of in-mine slug tests on the Star Point Sandstone, Genwal Resources consulting report prepared for Genwal Resources, Inc., November, 1997.**

**Mayo and Associates, March 1997, Supplemental hydrogeologic information for LBA 11.**

**Mayo and Associates, November 1997, Summary of new isotopic information forLBA 11. Mayo and Assoc., October 1997, Investigation of surface-water and groundwater systems in the PacifiCorp Lease area, East and Trail Mountains, Emery County, Utah: Probable Hydrologic Consequences of coal mining in the Trail Mountain LBA and recommendations for surface-water and groundwater monitoring, PacifiCorp.**

**Mayo and Associates, June 1999, Investigation of groundwater and surface-water systems in the vicinity of GENWAL's existing permit area and the Mill Fork Tract, Emery County, Utah.**

**Mayo and Associates, January 2001, Investigation of the alluvial groundwater system in Mill Fork Canyon with implications for recharge to Little Bear Spring.**

**Mayo and Associates, February 2001, Investigation of the potential for Little BearSpring recharge in Mill Fork Canyon, Emery County, Utah.**

**Mayo and Associates, November 2001, Determination of the recharge location of Little Bear Spring by means of fluorescent dye tracing.**

**Montgomery, J. R., AquaTrack Survey, December 1998, Little Bear Springs study, Huntington Canyon, Utah.**

**Montgomery, J. R., AquaTrack Survey, December 1999, Little Bear Springs study, Huntington Canyon, Utah.**

**Sunrise Engineering, January 2001, Resistivity survey (Mill Fork Canyon).**

**Sunrise Engineering, November 2001, AquaTrack Survey- Little Bear Spring, Huntington, Utah.**

**Vaughn Hansen Associates, August 1977, Water quality and hydrologic study in vicinity of Huntington Creek Mine No. 4 and Little Bear Spring, prepared for Swisher Coal Company.**

# R645-301-700: HYDROLOGY

## R645-301-710. INTRODUCTION

This application provides a detailed description of the hydrology, including groundwater and surface water quality and quantity, of the land within the Mill Fork ~~State Lease~~ Area (including UTU-88554/UTU-84285 and adjacent areas (refer to Figure MFHF-1)). The Mill Fork ~~Lease (ML-48258)~~ Area consists of approximately 5,563 acres (UTU-88554 - 5522.8 acres, UTU-84285 - 213.57 acres) located northwest of the existing Deer Creek Mine workings.

Detailed data on the hydrology of the land within the ~~permit~~ Mill Fork Area and surrounding area have been collected, compiled, and analyzed by PacifiCorp, hydrologic consultants and several government agencies. Information collected by PacifiCorp is the result of exploratory drilling, field investigations, geologic mapping, aerial photography, spring surveys, groundwater tests, monitoring of numerous wells and stream stations, climatological monitoring, and investigations by independent consultants.

PacifiCorp has a policy of close cooperation with many agencies and has invited, encouraged, and permitted numerous agencies to conduct investigations and experiments within and adjacent to the ~~permit~~ Mill Fork Area. The resulting information produced by these investigations is quite extensive and has been utilized throughout this application.

## R645-301-711. GENERAL REQUIREMENTS

**711.100 Existing hydrologic resources as given under R645-301-720**

**711.200 Proposed operations and potential impacts to the hydrologic balance as given under R645-301-730**

**711.300 The methods and calculations utilized to achieve compliance with hydrologic design criteria and plans given under R645-301-740**

**711.400 Applicable hydrologic performance standards as given under R645-301-750**

**711.500 Reclamation activities as given under R645-301-750**

## R645-301-712. CERTIFICATION

All cross sections, maps, and plans required by R645-301-722 as appropriate and R645-301-731.700 will be prepared and certified according to R645-301-512.

## R645-301-713. INSPECTION

No impoundments are planned for the Mill Fork Area.

# R645-301-720. ENVIRONMENTAL DESCRIPTION

## R645-301-721. GENERAL REQUIREMENTS

The existing pre-mining hydrologic resources of the East Mountain - Mill Fork Area are subdivided into the following sections.

A. Existing Groundwater Resources

1. Regional and ~~Permit~~ Mine Area Groundwater Hydrology
2. Regional and ~~Permit~~ Mine Area Geology
3. Regional and ~~Permit~~ Mine Area Groundwater Characteristics
4. Springs and Seeps
5. Groundwater Quality

6. Chemical Evolution of Groundwater
7. Solute and Isotope Chemistry
8. Active and Inactive Groundwater Zones
9. Mine Dewatering
10. Groundwater Rights and Users
11. North Emery Water Users ~~Association~~ Special Services District (NEWU~~A~~SSD)
12. Castle Valley Special Service District (CVSSD)
    Little Bear Springs

B. Existing Surface Resources

1. Regional and ~~Permit~~ Mine Area Surface Water Hydrology
2. Surface Water Quality
3. Soil Loss and Sediment Yield

## A. EXISTING GROUNDWATER RESOURCES

### 1. Regional Groundwater Hydrology

The characteristics and usefulness of a groundwater resource are dependent upon the geology of the water bearing strata and on the geology and hydrology of the recharge area. Groundwater movement and storage characteristics are dependent on the characteristics of the substratum. To facilitate an understanding of groundwater of the Mill Fork Area, a discussion of pertinent regional geologic features is presented below.

### 2. Regional Geology

The Mill Fork Area is located in the central portion of the Wasatch Plateau Coal Field in Emery County, Utah. Generally, this area is a flat-topped mesa surrounded by heavily vegetated slopes which extend to precipitous cliffs dropping steeply to the valley below. Relief of up to 5,000 feet is measured from Castle Valley lowland to the plateau above. The following discussion summarizes the structural geology and stratigraphy of the region and the ~~permit~~ mining areas located within the Mill Fork Area.

The regional geology of the Colorado Plateau in which the Wasatch Plateau coal field is situated is fairly simple. Sedimentary rocks have been accumulating in this region since Permian time. A broad, high, flat region that encompasses southeastern Utah, southwestern Colorado, northwestern New Mexico, and northern Arizona, the Colorado Plateau has been an area of relative stability while mountain-building episodes have occurred in surrounding regions. The thick accumulations of sedimentary rocks in this region are being deeply dissected by erosion, leaving the most recent coal reserves in the higher plateaus, where they are now being mined. The ~~Energy West permit~~ PacifiCorp mining area covers portions of East Mountain and Trail Mountain, which are separated by Cottonwood Canyon, a deep, partially glaciated valley.

The geologic formations exposed in the ~~Energy West permit~~PacifiCorp mining area range from Upper Cretaceous (100 million years old) to Tertiary and Recent in age. These formations, in ascending order from oldest to youngest, are the Masuk Shale member of the Mancos Shale, the Star Point Sandstone, the Blackhawk Formation, the Castlegate Sandstone, the Upper Price River Formation (all Cretaceous), and the North Horn Formation, and the Flagstaff Limestone (Tertiary). The coal deposits are restricted to the lower portion of the Blackhawk Formation, about 2,500 feet below the top of the Plateau. Recent geologic deposits include numerous stream terrace gravels along streams and rivers, glacial till deposits in the upper reaches of Cottonwood Canyon, and alluvial and colluvial fills in all of the significant drainages.

The Masuk Shale is the upper member of the Mancos Shale and consists of light to medium gray marine mudstones. The marine Masuk Member of the Mancos Shale was deposited in an open marine environment (Mayo and Peterson, 2001). The Masuk Member is a highly erodeable calcareous, gypsiferous, and carbonaceous dark gray colored shale. It is continuously exposed along the eastern edge of the Wasatch Plateau, but is not exposed in the Mill Fork ~~permit~~ Area. The Masuk Member is approximately 1,300 feet thick. Westward thinning wedges of the Masuk inter-finger with tongues of the Star Point Sandstone. Usually this formation weathers readily, forming slopes which are often covered by debris. It is generally devoid of water.

Overlying and intertonguing with the Masuk Shale is the Star Point Sandstone. In the East Mountain area the Star Point Sandstone consists of three or more massive sandstones totaling about 400 feet in thickness.

The Star Point Sandstone forms massive cliffs where exposed at the surface. The sandstone was deposited as seaward thinning (east), marine, shoreface blanket sands that are laterally continuous (Mayo and Peterson, 2001). Landward (west), these sandstones terminate abruptly into the mud- and organic-rich backshore facies (Van Wagoner and others, 1990). Because many of the organic-rich facies are now mineable quality coal, locally the Star Point Sandstone has immediate contact with coal seams. Elsewhere sandstone bodies of the Star Point Sandstone are overlain and underlain by lower shoreface and open marine shales of the Mancos Formation. What this means is that the marine shoreface sandstones are three dimensionally encased by low-permeability marine shales and fine-grained carbonaceous backshore coal-bearing facies (Mayo and Peterson, 2001).

The Star Point Sandstone thins eastward and merges with the underlying Masuk Member of the Mancos Shale. Three prominent tongues of the Star Point Sandstone inter-finger with the Mancos Shale. These three sandstone members, from top to bottom, are the

Spring Canyon, Storrs, and Panther Sandstones (refer to Figure 6, Mayo & Associates report in Appendix B). In the Mill Fork ~~permit~~ Area, the Spring Canyon tongue is approximately 100 feet thick, lies about 80 feet above the Storrs tongue, and consists of massive, fine- to medium-grained sandstone. The Storrs tongue lies about 120 feet above the Panther tongue and consists of 50 feet of soft, friable sandstone. The basal Panther tongue is approximately 100 feet thick and consists of massive, cross-bedded delta front sandstones Mayo and Peterson, 2001).

Even though the Star Point ~~Formation~~ Sandstone exists throughout the entire East Mountain property, the low permeability and lack of recharge limit its usefulness as a water producing aquifer. Permeability and the limiting factors of recharge, i.e., very little outcrop exposure and limited vertical groundwater migration caused by the mudstone layers of the North Horn and Blackhawk formations, will be discussed in detail in the section entitled REGIONAL GROUNDWATER CHARACTERISTICS. Locally, the Star Point Sandstone exhibits aquifer characteristics. These are isolated occurrences where regional faults have created secondary permeability and have been intersected by major canyons with perennial streams. An example is Little Bear spring located in Huntington Canyon.

The Blackhawk Formation consists of alternating mudstones, siltstones, sandstones, and coal. Although coal is generally found throughout the Blackhawk Formation, the economic seams are restricted to the lower 150 feet of the formation. The total thickness of the Blackhawk Formation in the East Mountain area is about 750 feet.

The upper portion of the Blackhawk Formation was deposited in an alluvial-plain/suspended-load fluvial channel environment (Mayo and Peterson, 2001). In these delta and flood-plain environments layers of mud are more abundant than channel sands. Sandstone channels are generally isolated from each other both laterally and vertically by mud-rich overbank and inter-fluvial rocks (Galloway, 1977). The upper portion of the Blackhawk Formation also contains some thin carbonaceous shale layers and thin coal seams that are not of economic interest.

The lower portion of the Blackhawk Formation contains the mineable coal deposits and consists of more thinly bedded sandstone and shale layers (Johnson, 1978). The coal-bearing units of the lower Blackhawk Formation overlie and are laterally juxtaposed to marine shoreface sandstones of the Blackhawk Formation and Star Point Sandstone (Mayo and Peterson, 2001). On a large scale, these sandstone bodies are laterally continuous but terminate abruptly into the mud- and organic-rich backshore faces in a landward direction (Van Wagoner and others, 1990). However, individual rock layers are lenticular and discontinuous, with abundant shaley interbeds. The fine to medium grained sandstones

occur as thin- to massively-bedded paleochannel deposits. The paleochannels increase in frequency, thickness, and lateral extent upward in the formation. There is also a vertical repetition of erosional scours within the upper sandstones (Marley, 1979).

The Castlegate Sandstone , the lower member of the Price River Formation, generally caps the escarpment which surrounds the eastern limit of the property. The Castlegate Sandstone consists of approximately 250 to 350 feet of coarse-grained, light gray, fluvial sandstones; pebble conglomerates; and subordinate zones of mudstones.

The formation was deposited from bed-load fluvial channel systems (Appendix B Figure 8; Chan and Pfaff, 1991). The Castlegate Sandstone is made up of coarse-grained, often conglomeratic, fluvial sandstone. Thin interbeds of siltstone and claystone occur in lower portion the formation. Sandstone dominates over mudstone and individual sand channels may be thin, wide, or interpenetrating. Although the primary porosity is high, the existence of mudstone drapes and pervasive carbonate and silica cement greatly reduces the overall porosity (Mayo and Peterson, 2001, Appendix B).

The Upper Price River Formation, which overlies the Castlegate Sandstone, is about 350 feet thick and forms steep slopes which extend upward from the Castlegate Sandstone.

The Price River Formation was deposited from mixed-load fluvial channel systems that have sandstone/mudstone ratios intermediate between bed-load and suspended-load channel systems (Mayo and Peterson, 2001, Appendix B). Sandstones and mudstones occur in about equal proportions. Point bars that develop in this type of system are larger than those in suspended-load channel systems. Mudstone drapes created during low flow stages of the active fluvial system separate the sandstones from each other both horizontally and vertically (Mayo and Peterson, 2001, Appendix B).

The North Horn Formation forms the cap rock for much of East and Trail mountains where the Flagstaff Limestone has been eroded away. Mudstones dominate the rock types present and are generally gray, light brown, to purple in color. Localized, lenticular sandstone channels are present throughout the formation. The sandstone beds are more common near the upper and lower contacts of the formation. The North Horn Formation is approximately 850 to 1,000 feet thick in the Mill Fork Area.

The North Horn Formation was deposited in an alluvial-plain/suspended-load fluvial channel environment (Mayo and Peterson, 2001, Appendix B). In such environments layers of mud are more abundant than sands, which occur in sandstone channels. The sandstone channels are generally isolated from each other, both laterally and vertically, by mud-rich overbank and inter-fluvial rocks (refer to reference list in Appendix B: Galloway,

1977 ). In the study area the formation consists primarily of shale with discontinuous sandstone channels, minor lenses of limestone, and conglomerate. Highly bentonitic mudstones, which swell when wetted, are common in the lower two-thirds of the formation.

The Flagstaff Limestone caps the uppermost portions of East Mountain is the youngest formation exposed in the Mill Fork ~~permit~~ Area. It typically forms small exposures on top of the plateau (refer to Geologic Section, Geologic Formation Map). A thickness of 105 feet was measured on Trail Mountain immediately south of the study area (refer to reference list in Appendix B: Davis and Doelling, 1977). Maximum thickness in the Mill Fork ~~permit~~ Area is approximately 80-100 feet.

The Flagstaff Limestone consists of carbonates, marls, and some thin sandstone stringers deposited in lacustrine, marginal lacustrine, and alluvial plain depositional environments (refer to reference list in Appendix B: Garner and Morris, 1996). It primarily consists of light- to medium-gray colored limestone containing abundant secondary fractures produced during uplift and subaerial exposure (Mayo and Peterson, 2001, Appendix B).

## 3. Regional Groundwater Characteristics

Waters entering the groundwater system are mostly from snow melt. The amount of water which enters the groundwater system is highly variable from one site to another. The low surface relief on the top of East Mountain encourages the infiltration of melting snow. Conversely, the many areas with steep slopes have a much more limited infiltration opportunity. All of the geologic formations which surface in the area have relatively low permeability which further reduces the amount of water entering the groundwater system. Probably less than five percent of the annual precipitation recharges the groundwater supply (Price and Arnow, 1974; U. S. Geological Survey, 1979).

Geology controls the movement of groundwater. Because of the low permeability of the consolidated sedimentary rocks in the East Mountain area, groundwater movement is primarily "through fractures, through openings between beds, and, in the case of the Flagstaff Limestone, through solution openings" (Danielson et al., 1981, p. 25).

The majority of the groundwater which infiltrates the Flagstaff Limestone flows down vertical fractures which intersect sandstone channel systems in the North Horn Formation. The majority of the groundwater reaching this point intersects the surface in springs located in the North Horn Formation. Very little recharge intersects the Price River Formation and Castlegate Sandstone; consequently, they are not water saturated where intersected in the numerous drill holes penetrating those units. The remaining water then flows downdip (to the southeast) from the northern reaches of East Mountain until it discharges in the form of springs.

Data have been collected from numerous coal exploration drill holes, from within the adjacent mine workings, from surface drainages, and from the springs in the area. The data have identified two separate isolated aquifer systems on the East Mountain property; the first is localized perched water tables in the North Horn and the Price River formations, and the second is a combination of localized perched water tables in the Blackhawk Formation and the Star Point Sandstone which exhibits some limited potential as a regional aquifer. Stratigraphy is the main controlling factor restricting groundwater movement and development of regional and perched aquifer systems within the East Mountain property. The following is a description of the various formations and how they influence the groundwater systems. The description is in descending order, which parallels the general groundwater flow (refer to Figure MFHF-3).

Flagstaff Limestone

This formation displays a strong joint pattern which permits good groundwater movement both vertically and horizontally through the formation. Exposures of the Flagstaff Limestone ~~is~~ are limited to a narrow north-south trending ridge located in the western half of the Mill Fork ~~permit~~ Area.

*a. North Horn Formation*

This formation is comprised of a variety of rock types which range from highly calcareous sandstone to mudstone. Its permeability is variable.

Lenticular sandstone channels are oftentimes present in the upper and lower portions of the formation. Water which percolates down fractures from the overlying Flagstaff Limestone works its way into the sandstones, forming the perched water tables. The actual lateral extent, or correlation, between the perched water tables has not been identified; and it is not practical to do so because the tables are limited in extent and variable in stratigraphic location. Many springs have been identified where the sandstone channels intersect the land surface.

The lower two thirds (upper Cretaceous in age) of the formation is generally highly bentonitic mudstone which is impermeable. It is likely that this material is acting as an aquiclude, preventing adequate recharge from reaching the Upper Price River Formation or Castlegate Sandstone below (bentonitic mudstone will be discussed in detail in the PHC.) The mudstones present swell when they come in contact with water. Therefore, vertical migration of water along fractures through this material is limited because the fractures are sealed by the swelling clays.

The depth of the aquifers in the North Horn Formation is variable due to the rugged topography. The localized perched water tables may either intersect the surface of the ground or be covered by as much as 1,000 feet of overburden. They are located at least 1,400 feet above the coal seam to be mined. Communication of water between the perched aquifers in the North Horn Formation and the water flowing into the mine is limited in quantity and occurs very slowly. The monitoring of the numerous springs located on East Mountain gives PacifiCorp the ability to assess any effects that mining might have on the North Horn Formation perched aquifers.

With the data available it is not possible to compile a piezometric map of the waterbearing strata in the North Horn Formation because the channels are discontinuous and not interconnected.

*b. Upper Price River Formation*

The Upper Price River Formation is comprised predominantly of sandstone but commonly contains mudstone beds between the point bar deposits. It is generally devoid of water because it lacks adequate recharge.

*c. Castlegate Sandstone*

The formation is thought to be fairly permeable but, where it has been intersected by drill holes, has never been found to be water saturated. It is often dry or slightly damp in some zones. It is devoid of significant water because it lacks adequate recharge.

*d. Blackhawk Formation*

The Blackhawk Formation contains only perched or limited aquifers which exist within the strata overlying the coal seams and the upper portion of the Star Point Sandstone Formation. The perched aquifers exist as fluvial channels (ancient river systems) which overlie and scour into the underlying strata (refer to Volume 9 Hydrologic Section Maps HM2 and HM3 for examples of mapped channels systems within the adjacent Cottonwood and Deer Creek mines). Channel systems were part of a deltaic depositional setting active during and after the coal forming peat accumulation. The largest influx of water encountered during the mining process occurs beneath the fluvial channels. The sandstone channels are mainly composed of a fine to medium grained sand with similar characteristics to the Star Point Sandstone Formation. The semi-permeable and porous nature of the channels allows an effective route for water transport. Other

constituents of the Blackhawk Formation (i.e., non-permeable mudstone, carbonaceous mudstone, coal seams, and inter-bedded mudstones/siltstones and sandstones) generally act as aquicludes which impede vertical groundwater flow to the lower stratigraphic units. In areas other than where faulting and fracturing have created secondary permeability, the migration of water from the perched aquifers-sandstone channel systems of the Blackhawk Formation to the Star Point Sandstone Formation is limited. Extensive mining in the Cottonwood/Wilberg complex, which produces coal from the Hiawatha seam, is stratigraphically located directly on top of the upper member of the Star Point ~~Formation~~ Sandstone. Only minor quantities of groundwater have been produced from the Star Point Sandstone ~~Formation~~. The coal seams of the Blackhawk Formation are effective in impeding vertical groundwater movement. In many areas in the adjacent mines where roof coal was left in place because of abundant thickness or as an additional effort to support the immediate roof, production of groundwater occurred only when roof support was installed or when a roof failure occurred exposing the overlying sandstone channel systems. Listed below are hydrologic characteristics of individual rock types reported by the USGS, Open File 84067.

Lithology: Sh, shale; Slt, siltstone; Ss, sandstone; f, fine grained; m, medium grained.
Hydraulic Conductivity: I, impermeable to water even at pressures of 5,000 pounds per square inch (psi).

| | | | | Hydraulic Conductivity (feet per day) | |
|---|---|---|---|---|---|
| Geologic Unit | Lithology | Depth below land surface | Porosity % | Horizontal | Vertical |
| Blackhawk Formation | Ss, f | 1,521 | 14 | $1.5x10^{-2}$ | 3.7x10-3 |
| | Slt | 1,545 | 3 | $9.3x10^{-8}$ | 1.2x10-7 |
| | Sh | 1,786 | 2 | I | I |
| | Ss, f | 1,792 | 14 | $1.1x10^{-2}$ | 3.9x10-3 |
| | Sh | 2,170 | 4 | $1.1x10^{-8}$ | --- |
| | Slt | 2,265 | 2 | $2.0x10^{-7}$ | 2.2x10-6 |
| Star Point Sandstone | Ss, m | 2,466 | 17 | 3.1x10-2 | 1.1x10-2 |
| | Ss, | 2,493 | 11 | 1.5x10-2 | 6.6x10-3 |

In the adjacent Cottonwood and Deer Creek mines, the majority of the water flowing into the mines comes from within the limited fluvial channel aquifers; however, water is also transmitted into the mine workings by way of faults, joints or fractures, and in-mine drill holes. Historical monitoring locations in the Deer Creek Mine are shown on Map HM2, in the Wilberg/Cottonwood Mine on Map HM3 (refer to Volume 9 Hydrologic Section). Many locations within the mines have been monitored in the past, but a limited number of accessible long term water monitoring

locations now exists because most water-producing areas of the mines are dewatered and stop flowing shortly after initial mining in the area.

In several locations in the Deer Creek and Wilberg/Cottonwood mines, such as retreated longwall panels, water is being produced but cannot be measured because the workings are inaccessible. The water entering these areas flows into numerous low areas in the mine which act as temporary sumps. The water is then pumped to the main sump located near the mine portal. Because the pumping system in the mine is ever changing (i.e., portable pumps being moved to various locations within the mine as the need arises), it is not possible to collect meaningful data from specific areas of the mine that can be compared with data collected from years or even months past.

Based on data from the adjacent mines, several observations have been made concerning the Blackhawk water-bearing strata. The sandstone, which is semi-permeable and porous, affords an effective route of water transport; while relatively impervious shale in the Blackhawk Formation prevents significant downward movement of the percolating water. Of the water-producing areas, those closest to the active mining face exhibit the greatest flows. As mining advances the area adjacent to the active face continues to be excessively wet, and previously mined wet areas experience a decrease in flow. It appears that the water source is being dewatered since mined out areas of the mine do not continue to produce water indefinitely. The water source must be either of limited extent, e.g., a perched aquifer, or have a limited recharge capacity. In an attempt to quantitatively evaluate saturated sandstone channels, a dripping channel in the 6th West area of the Deer Creek Mine was investigated (site 6W X 20; Figure 10, refer to Mayo & Associates report, Volume 9 Hydrologic Section: Hydrologic Support Information No. 11). The channel, located near a minor fault with very limited displacement, has the dimensions of >2,000 feet in length, 150 feet in width and a maximum thickness of 25 feet. An array of uphole monitoring wells was installed across the width of the channel. The wells were 15 to 25 feet deep and were open along their entire depth. Each well was equipped with a shutoff valve and pressure gauge. The idea was to conduct a pump test by letting selected wells gravity drain and simultaneously measuring pressure change in nearby wells. Because a maximum of about 2 psi was recorded in the well (i.e. (5 feet of water) we were unable to conduct the test. What the well did

demonstrate was that the sandstone channel was not fully saturated and it was a perched, unconfined groundwater system.

Although much of the water transfer within the Blackhawk Formation is through fractures or faults, data indicate that recharge to the Blackhawk is limited because of the above confining formations and many of the fractures become sealed by swelling bentonitic clays which stop or limit the water transfer, confirmation of which exists along the numerous faults and fractures over the area. A measurable flow of water along a fault existed at only one location in the Wilberg/Cottonwood Mine - along the Pleasant Valley Fault in Main West, Wilberg. This location produced an estimated average flow of 5 gpm from the time it was encountered to 1980 when the flow stopped. The fractures sealed readily because of the ability of the shaley layers to swell and decompose to form an impervious clay, preventing significant downward percolation, collection, or conveyance of water along faults in the Blackhawk Formation.

Significant quantities of groundwater were also encountered in the Deer Creek Mine, 4th South area, where development entries intersected fractures/faults associated with the Roans Canyon Fault system. As with other areas where groundwater has been intercepted, the flow from the 4th South/2nd Right area has decreased rapidly, from approximately 2000 gpm in March 1990 to approximately 120 gpm in December 1990. Exploratory drilling was utilized in the development entries to locate and map the extent of the water producing fracture. The water producing zone was isolated utilizing an inflatable packer and a pressure gauge was installed to monitor the head differential. Pressure readings recorded were similar to those of Roans Canyon Fault crossing at 3$^{rd}$ North, with readings varying from 80-90 pounds per inch. This calculates out to approximately 200 feet of head. The amount of overburden in the area where the water producing fracture was encountered is approximately 1800-2000 feet. In reviewing the dewatering curve and the initial head differential, groundwater produced from the interception of the water producing fracture was a function of storage and recharge to the fault is limited. To monitor the potential impact of mine dewatering, PacifiCorp installed a series of wells in both the Deer Creek and Cottonwood/Wilberg mines (refer to Volume 9 Hydrologic Section Maps HM-2 and HM-3). These wells were incorporated in the hydrologic monitoring program in 1989. Well development information was detailed in the 1989 Annual Hydrologic Monitoring Report and in Volume 9 - Hydrologic Support Information). Only the wells in the Deer

Creek Mine along the axis of the Straight Canyon Syncline revealed a change which could possibly be related to mine dewatering. In addition to the in-mine monitoring PacifiCorp installed a series of surface wells to monitor the potential impacts in Cottonwood Canyon located to the south of Mill Fork and in Rilda Canyon located to the east of Mill Fork. To evaluate the effects on the surface springs and surface drainage systems PacifiCorp maintains an extensive monitoring program. Data collected will be reported annually in the Hydrologic Monitoring reports.

Long-term water producing areas do exist within the current mine workings. Four types of occurrences have been recognized and will be monitored by the applicant (refer to Volume 9 Hydrologic Section: Figure HF4) and include 1) structural rolls with overlying fluvial channels, 2) Pleasant Valley and Roans Canyon Fault systems, 3) fractures and joints (lineaments), and 4) surface and in-mine drill holes.

*e. Star Point Sandstone*

The Star Point Sandstone overlies and inter-tongues with the Masuk Shale. The formation is approximately 350 to 400 feet in thickness and consists of at least three upward coarsening sandstone units. Mudstone units of the Masuk Shale are present above the lower two sandstone members of the Star Point Sandstone due to the inter-fingering nature of the contact between the two units.

The Star Point Sandstone, which immediately underlies the Hiawatha Coal Seam, exhibits some characteristics of an aquifer but experiences little recharge. Studies conducted by the USGS indicate that the Star Point Sandstone is of low permeability, thus limiting its usefulness as a water-producing aquifer. Most of the water discharge from the Star Point Sandstone is where it has been intersected by the major canyons in the plateau or where faulting has caused secondary permeability. This, plus the fact that the Star Point Sandstone is only slightly to moderately permeable, allows only limited flow of groundwater through the formation. Drill holes completed in the Deer Creek, Wilberg/Cottonwood and Genwal mines have defined the piezometric gradient in the lower Blackhawk/Star Point Sandstone system in isolated areas and confirmed the groundwater flow conforms with the topographic relief and structural features, i.e., regional dip, Straight Canyon Syncline, and regional faulting (refer to Volume 9, figures HF-5A and HF-5B for gradient information related to Deer Creek and Wilberg/Cottonwood mines and figure MFHF-6 for

potentiometric gradient data for the Spring Canyon Member of the Star Point Sandstone for the Mill Fork Area).

The overall pattern of groundwater flow and surface water-groundwater interactions in the Mill Fork ~~permit~~ Area and adjacent areas can be described by a fairly simple conceptual model involving both active and inactive groundwater flow regimes (Mayo and Morris, 2000 Appendix B). The model is illustrated in Appendix B Figure 27. Inactive zone groundwater systems contain old groundwater (i.e. 2,000 to 19,000 radiocarbon years, Appendix B Table 5), have very limited hydraulic communication with the surface and with other active groundwater flow systems, and are not influenced by either annual recharge events or short term climatic variability as evidenced by the decline in roof drip rates (Appendix B Figure 15) and lack of fluctuations of in-mine monitoring wells.

Solute chemistry in the Spring Canyon Member is not uniform beneath existing mines suggesting that there is a partitioning of groundwater systems in the member (refer to Appendix B - Mill Fork Hydrologic Investigation). This condition is likely the result of inter-bedded lower-permeability layers in the Star Point Sandstone which partition individual sandstone bodies. These findings are substantiated by monitoring well data from 6 wells in the Trail and East Mountain areas (Appendix B Section 7.3) and are significant in that they strongly suggest that the Spring Canyon Member does not act as a single regionally continuous aquifer, but rather it supports a series of smaller, discrete groundwater systems.

Water in most of the Blackhawk/Star Point aquifer is confined under pressure between shale and siltstone beds within the aquifer (USGS, Lines, Open File Report 84067). Water is released from storage from confined aquifers mainly by compression of the sandstones and less permeable, confining beds as pressure in the aquifer declines. The quantity of water that can be released from storage is dependent on the storage coefficient, which is about $1x10^{-6}$ per foot of thickness for most confined aquifers (USGS Lines, Open File Report 84067). Data collected by PacifiCorp on the Roans Canyon Fault System in 1988, 3rd North fault crossing, confirmed the USGS storage coefficient estimations, with values ranging from $1.6x10^{-4}$ to $7.0x10^{-6}$. Transmissivity values computed for pump tests conducted by the USGS on Trail Mountain on ~~nonfully~~ semi-penetrating wells in the Blackhawk/Star Point aquifer ranged from 0.7 to 100 $ft^2$ /day

with a majority of the two results ranging from 1 to 10 $ft^2$ /day. The computed transmissivity of 100 $ft^2$ /day was greater than the laboratory data (listed early in this section) and was believed to be due to secondary permeability in the form of fractures. Transmissivity results ranging from 0.7 to 10 $ft^2$ /day are indicative of the low permeability rock in most of the Cretaceous and Tertiary strata within the Wasatch Plateau.

*f. Structural Hydrologic Features*

Several important structural features, the Straight Canyon Syncline, Flat Canyon Anticline and Huntington Anticline, the Roans Canyon Fault Graben, Mill Fork Fault Graben, Left Fork Fault Graben, Pleasant Valley Fault, and the Deer Creek Fault, have been identified adjacent to and within the Mill Fork ~~permit~~ Area (refer to Hydrologic Map MFS1830D).

Folding:

Strata in the Mill Fork area are gently folded in two broad structural features. The Flat Canyon Anticline crosses the southeastern portion of the ~~permit~~ lease area (refer to Hydrologic Map MFS1830D). This anticline trends southwest to northeast, and plunges to the southwest. Dips in the anticline range from two to six degrees with the south limb dipping the steepest.

To the north, the north limb of the Flat Canyon Anticline becomes the south limb of the Crandall Canyon Syncline, a flat-bottomed syncline. This syncline also trends southwest to northeast. Dips on the northwest side are much steeper than on the southeast side.

Faulting:

The only known fault within the Mill Fork ~~permit~~ Area is the Joes Valley Fault, which forms the western limit of the coal reserves in this ~~permit~~ area. The Joes Valley Fault is the largest and most prominent of several north south trending fault zones within the Wasatch Plateau coal field. Displacement of the fault is approximately 1,500 feet, downthrown on the western side. The fault creates a continuous north-south escarpment on the east side of Joes Valley. Several side canyons are cut into this escarpment on the western side of the ~~permit~~ lease area, all of which drain into Joes Valley. The fault zone itself is not visible along this escarpment, but the fault has been intercepted underground in the Genwal Mine to the north. Where the fault has been intercepted in the Genwal mine workings, a drag

fold is present, indicated by a gentle downward folding of the strata along the fault zone, extending for a few hundred feet to the east of the fault.

The nearest known faulting outside of the ~~permit~~ lease area is the Mill Fork fault graben. The Mill Fork fault graben passes to the southeast of the ~~permit~~ lease area (refer to Hydrologic Map MFS1830D). This fault graben was crossed in ARCO's Huntington Canyon #4 Mine in Mill Fork Canyon and has a displacement of about twenty five (25) feet on the each side. The trend of this fault zone is approximately N 40$^{o}$ E. Based on projections from maps of #4 Mine, this graben should pass by the southeast corner of the ~~permit~~ lease area, between the Mill Fork lease and the existing Deer Creek Mine. Where it crosses the northern end of East Mountain, the fault has been mapped to have a displacement of thirty (30) feet down on the northwest side. Deer Creek mine workings have not intercepted this fault zone and exploration drilling in the right fork of Rilda canyon does not show any displacement, indicating that the displacement of the fault zone is too small to measure with exploration drilling, or that it has disappeared in this area. This fault zone does not appear in any surface outcrops.

*g. Alluvial Aquifers*

Utah Regulations require that the presence of alluvial valley floors in or adjacent to the mine project area be identified. The regulations define an alluvial valley floor as "unconsolidated stream laden deposits holding streams with water availability sufficient for sub-irrigation or flood irrigation agricultural activities but does not include upland areas which are generally overlain by a thin veneer of colluvial deposits composed chiefly of debris from sheet erosion, deposits formed by un-concentrated runoff or slope wash together with talus, or other mass movement accumulations, and windblown deposits." The alluvial valley floor is therefore determined to exist if:

1. Unconsolidated stream-laid deposits holding streams are present, and,
2. There is sufficient water to support agricultural activities as evidenced by:
    a. The existence of flood irrigation in the area in question or its historical use;
    b. The capability of an area to be flood irrigated, based on stream flow, water yield, soils, water quality, topography, and regional practices; or

c. Sub-irrigation of the lands in question, derived from the groundwater system of the valley floor.

Scope: The purpose of this section of the report is to examine the potential existence of alluvial valley floors in and adjacent to the areas to be affected by surface operations associated with the permit areas. It is divided into three parts. First, a general description of the surface operations and site disturbances associated with the permit areas is presented. Next, discussions of the characteristics of geomorphology and irrigation are presented. Finally, the conclusions of the alluvial valley floor determination are summarized.

Site Description: Surface facilities associated with the permit area will consist of the portal area and associated facilities for Deer Creek Mine.

The climate of the general area is semi-arid to arid and continental. Daily minimum temperatures recorded at the East Mountain weather station in winter range from the average low of -6.3$^{o}$ F to the maximum record low of -15.2$^{o}$ F, and daily maximum temperatures in summer range from the average high of 84.7$^{o}$ F to the maximum record high of 89.3$^{o}$ F.

Temperatures in the region tend to be inversely related to elevation. Average annual precipitation recorded for a 20 year period (1981-00) at the East Mountain weather station averaged 13.59 inches. Approximately fifty percent of the annual precipitation falls during the winter as snow with most of the remainder coming as summer thunderstorms.

Alluvial Valley Floor Characteristics: In this section of the report the various criteria for determining the existence of an alluvial valley floor are examined in relation to the overall ~~permit~~ Mill Fork and adjacent areas.

Geomorphic Criteria: Alluvial deposits in and adjacent to the ~~mine permit~~ Mill Fork Area have been mapped and reported in Doelling's "Wasatch Plateau Coal Fields, 1972." The report indicated that alluvia in the area are found solely along Huntington Creek below the Rilda Canyon confluence in the Huntington drainage system, in the Cottonwood drainage system along lower Cottonwood Creek and at the mouth of the North Fork of Cottonwood Creek, and in the Joe's Valley drainage.

Flood Irrigation: Flood irrigation near the project area is currently (and has historically been) confined to the alluvial areas of Huntington Creek approximately one mile below the confluence of Deer Creek and Huntington Creek. In the Cottonwood drainage system flood irrigation is currently, and historically, confined to the alluvial areas of lower Cottonwood Creek. No flood irrigation has historically been practiced on the narrow alluvium land upstream in the canyons opening to lower Cottonwood and Huntington Canyon creeks. The historic lack of flood irrigation in these steep, narrow canyons suggests that such activities are not feasible in the region. In addition, the topography is very steep and consequently not conducive to agricultural activities.

Water quality of Cottonwood and Huntington creeks is good. A detailed review of the surface water quality has been presented previously in this report and is updated each year in the annual Hydrologic Monitoring Report.

Sub-irrigation: Some sub-irrigation of vegetation does occur on the alluvial valley floors. The sub-irrigated species (mainly cottonwoods and willows) are found along the channels of Cottonwood Creek and in the Joes Valley drainage above the reservoir and along the channels of Rilda Canyon and Huntington Creek. This suggests that sub-irrigation is confined to the channel areas where the water table is near the surface.

Alluvial Valley Floor Identification: Based on the foregoing analysis, the narrow canyons associated with the ~~permit~~ Mill Fork Area cannot be considered to have an alluvial valley floor due to insufficient alluvium and the very limited area for supporting an agriculturally useful crop. The valley floor of Huntington Creek below the confluence with Deer Creek, however, can be classified as an alluvial valley floor due to the presence of both flood irrigation and limited sub-irrigation on the alluvium.

Potential Impacts of Alluvial Valley Floors: Very little potential exists for the mine operations to impact the Cottonwood and Huntington Creek alluvial valley floor due to the location of the operations in comparison to the alluvial deposits. All surface disturbances in the portal area will be protected by sediment control facilities and have been designed and constructed according to R645 standards in an environmentally sound manner.

The hydrologic monitoring program will help determine the actual impact of surface activities and aid in selecting mitigating measures, if necessary; however, it is believed that the overall ~~permit~~ lease area and associated activities will have no significant hydrologic impacts on the alluvial valley floor along Cottonwood and Huntington creeks. Details concerning the monitoring program are outlined in section R645-301-731.

### 4. Springs and Seeps

Prior to coal leasing, lands administrated by the United States Forest Service require sufficient environmental baseline data to be analyzed during the National Environmental Protection Act (NEPA) analysis process. In preparation for coal leasing through the lease-by-application process, Genwal Resources conducted baseline spring and seep surveys from 1994-1996 (northern portions of the lease were surveyed in 1989-90). Data collected by Genwal Resources was determined by the Forest Service to meet the requirements of the Data Adequacy Standards (refer to Appendix C). Information submitted to the Forest Service included: location, flow and quality (data indicates general trends, date of collection generalized and quality limited to field data). With PacifiCorp's acquisition of the Mill Fork State Coal Lease (reverted to the BLM on August 1, 2011 and designated as federal lease UTU-88554), a complete re-evaluation of groundwater resources was initiated in 2000 and continued through 2002. Evaluation of the data revealed similar geologic occurrences to the southern portion of East Mountain, (majority of the groundwater resources discharge from the North Horn Formation in a down-dip configuration), which has been monitored by PacifiCorp for more than ~~twenty~~ thirty years. The water reconnaissance program of the Mill Fork Area was initiated with an aerial survey via helicopter. During the reconnaissance survey, previous baseline survey data was evaluated for field location accuracy. Based upon initial observations, PacifiCorp commenced a field program in 2000 to completely map, field mark and photograph each groundwater source. Previous baseline studies were utilized as a guide of potential groundwater resources. The entire area of the Mill Fork ~~State Lease/UTU-84285~~ Area (including leases UTU-88554 and UTU-84285) and adjacent area was traversed. During the field reconnaissance process, when water resources were encountered, they were tracked to the source. At the sources, the sites were located utilizing GPS surveying techniques (GPS - equipment: Trimble Asset Surveyor, differentially corrected, horizontal accuracy sub-meter), digitally photographed, field marked with a brass tag and measurements were taken of flow and temperature (refer to Appendix C). PacifiCorp retained identification system established during the previous surveys, except for the Joes Valley area and Mill Fork Ridge. In these two areas, several springs were labeled with multiple tags of different numbers and separate springs were labeled the same identification. In addition to the field measurements, PacifiCorp collected baseline water quality samples. Not all sites were sampled, collection of water quality samples were

restricted to sites where representative samples could be obtained. At selected sites, springs were also sampled for isotopic data. These sites were selected based on geographic location, geologic formation, and occurrence (refer to Appendix C).

During the 2000-2002 baseline evaluation, a total of 198 springs were identified within and adjacent to the ~~permit~~ Mill Fork Area. Each spring site on East Mountain has been studied to determine the geologic circumstances that cause the springs to occur. The mode of occurrence for each spring has been tabulated on the "Springs Geologic Conditions Inventory" sheets located in the compact disk in the Appendix C. The springs on East Mountain originate in several different ways (see Table MFHT-1 and Mill Fork ~~Spring~~ Hydrologic Map MFS183~~1~~0D); however, many springs share the same mode of occurrence and, in some cases, are related.

The most frequent occurrences of springs are those located about 150 to 350 feet below the top of the North Horn Formation (refer to Figure MFHF-4). Field observations along with drill hole data show a predominance of fluvial siltstone and sandstone at that stratigraphic interval. These sedimentary rocks represent many isolated fluvial systems which are water-bearing. The springs are formed where the fluvial channels intersect the land surface. Because the fluvial channels within this zone are generally not interconnected, the springs are not interrelated but share the same mode of occurrence.

Numerous springs located in the lower portion of the North Horn Formation occur when water flowing through fluvial sandstones which are underlain by a thin zone of impervious mudstone at the base of the North Horn Formation intersects the land surface. Field observations along with drill hole data indicate that impervious mudstone units occur at the upper and lower portion of the North Horn Formation. Even though these individual mudstone layers are discontinuous, the occurrence of this type of strata exists throughout the East Mountain Property. The springs related to this mode of occurrence are not generally interrelated because they are fed by waters flowing through isolated fluvial channel sandstones and siltstones.

Numerous springs are located along and within the Joes Valley Graben. Generally, the springs are located within the North Horn Formation (Bald Mountain Ridge located west of the ~~permit~~ Mill Fork Area) along the fault zone and the alluvial valley deposits. Many of the largest springs surveyed for the Mill Fork ~~permit~~ Area are located along this fault system west of the Mill Fork ~~permit~~ Area. The springs located along this fault zone are generally interrelated.

A few springs are located within both the Flagstaff and Price River formations; however, their occurrence is insignificant in comparison to springs located in the North Horn Formation.

Generally springs with discharges exceeding 50 gpm are associated with faulting where permeability has been increased by fracturing (example: Bald Ridge area). The discharge of the springs varies directly with the amount of precipitation and also varies seasonally. Discharge is greatest during the snow melt period, normally from late April through the month of June. Following periods of groundwater recharge the discharge recedes fairly rapidly at first, then gradually, indicating a double porosity effect. At the end of the water year, the remaining discharge is only twenty to thirty percent (20-30%) of the peak discharge (refer to Tables MFHT-3 and -4 for historical data for the southern portion of East Mountain compared to the Mill Fork Area. Seasonal flow variation collected for the Mill Fork ~~permit~~ Area compares directly to the data collected for the southern portion of East Mountain and data collected by Genwal resources to the north. Table MFHT-4 compares the data collected from the southern portion of East Mountain to the Mill Fork Area.

The following table provides a breakdown of spring locations by geologic formation and surface drainage:

| MILL FORK ~~PERMIT~~ AREA (Energy West 2000-2002 Surveys)<br>**SPRINGS by GEOLOGIC FORMATION and SURFACE DRAINAGE** | | | | | | |
|---|---|---|---|---|---|---|
| ***Drainage System*** | ***Geologic Formation*** | | | | | |
| | ***Alluvium*** | ***Flagstaff*** | ***North Horn*** | ***Upper Price River*** | ***Castle Gate*** | ***Blackhawk*** |
| **Huntington Drainage** | | | | | | |
| Crandall Canyon | 0 | 0 | 0 | 7 | 1 | 0 |
| Mill Fork Canyon | 0 | 0 | 44 | 10 | 1 | 5 |
| Right Fork of Rilda Canyon | 0 | 1 | 39 | 1 | 0 | 0 |
| **Cottonwood Drainage** | | | | | | |
| Un-Named Drainages of Joes Valley | 35 | | 29 | 19 | 6 | 0 |
| Total Number of Springs = 198 | | | | | | |

## 5. Groundwater Quality

Groundwater chemical quality is very good in strata above the Mancos Shale. The USGS reported a range in dissolved solids from 50 to 750 mg/l for samples from 140 springs in the region issuing from the Star Point Sandstone Formation and overlying formations (Danielson et al., 1981). During the Energy West 2000 - 2002 seep and spring surveys, a total of one hundred twenty-nine (129) samples were collected with a range of dissolved solids from 207 to 390 mg/l (refer to Appendix C). Danielson et al. (1981) identified the regional trends of decreasing water quality from north to south and west to east across the Wasatch Plateau. Waters percolating through the underlying Mancos Shale quickly deteriorate, with total dissolved solids concentrations frequently exceeding 3000 mg/l.

Additional studies by PacifiCorp have confirmed the primary findings of the USGS concerning regional trends in quality. Originally, decreasing quality from north to south was believed to depict the groundwater flow direction, and the quality decreased as a function of the time it traveled through the strata. Although the time travel component is probably an important factor, in 1985 a surface exploration program identified the existence of an area of residual heat from an ancient burn on the outcrop throughout the southern extreme of East Mountain. The high temperature was also explored within the mine and a portion of reserves were lost because of the situation. It is now theorized that the high temperature water dissolved the mineral constituents of the formations, thereby altering the water chemistry. The quality also decreases vertically downward because of the influence of marine sediments along with the trend of decreasing quality from north to south.

An examination of Figure MFHF-5 indicates that a relationship exists between elevation and the total dissolved solids concentration of the springs. The data indicate that concentrations of dissolved materials increase with diminishing elevation for both surface streams and springs. The change in quality is a function of the differences in the chemical character of geologic formations which outcrop at different elevations.

To more closely identify springs which are related, water samples are analyzed to determine the percentage of cations and anions in solution. These percentages have been graphically represented as cation-anion diagrams (refer to Appendix B, Table 2, Figure 22 and Appendix C: Water Quality tab). The purpose of the diagrams is to identify groups of related springs by water chemistry. The diagrams clearly show the similarity of water quality of springs originating in the same geologic formation. Historical data from PacifiCorp's on-going East Mountain Hydrologic Program has demonstrated is that, even though the quality varies slightly from individual sites as well as from different formations, seasonal variations do not exist (refer to Annual Hydrologic Reports for yearly comparisons and Volume 9 Hydrologic Section Hydrologic Support Information No. 11, page 36: paired t-test analysis). Along with the data referenced above, Table MFHT-5 compares the seasonal water quality data collected during 2000-2001 field seasons for the Mill Fork Area. Data collected in 2000-2001 confirms the trends historical in data collected for southern East Mountain, i.e., despite the seasonal variability in discharge rates, the solute concentrations of active region ground waters do not exhibit significant seasonal variability (refer to Appendix C: Water Quality tab and Table MFHT-5).

PacifiCorp began in-mine quality monitoring in 1977 (Cottonwood/Wilberg and Deer Creek mines). With the collection of numerous samples throughout the extent of the mine workings, the quality has remained relatively constant (see Volume 9 Hydrologic Section Maps HM2 and HM3). As with the springs the quality varies from individual sites, but quality from the individual sites remains constant versus time (see Volume 9 Hydrologic Section Figure HF8).

The predominant dissolved chemical constituents of the groundwater from both surface springs and samples collected in the mine are calcium, bicarbonate, magnesium, and sulfate. Concentrations of magnesium are normally about one-half the concentration of calcium. Sulfate concentrations are typically higher in water from springs issuing from the Star Point Sandstone-Blackhawk aquifer zone or confined aquifers intersected by mine workings. As mentioned earlier, water quality degrades from the north to the south and also vertically.

PacifiCorp contracted Mayo & Associates in 1996 to conduct comprehensive study to characterize the hydrology and hydrogeology of the East and Trail M~~m~~ountains (refer to Volume 9 - Hydrologic Support Information No.11). The hydrogeology of the PacifiCorp leases were evaluated by analyzing: 1) solute and isotopic composition of surface and ground waters, 2) surface and groundwater discharge data, 3) piezometric data, and 4) geologic information. The following lists the key points and conclusions from the 1996 study:

**Conclusions from the 1996 Mayo & Associates Hydrologic Investigation**

1. The $\delta^2$H and $\delta^{18}$O compositions demonstrate that all ground waters are of meteoric origin (i.e. snow and rain).
2. Active and inactive groundwater regimes occur in the mine lease area.
3. The active regime includes alluvial groundwater, groundwater in the Flagstaff Formation, and all near surface exposures of the other bedrock formations except, perhaps, the Mancos Shale. The near surface extends about 500 to 1,000 feet into cliff faces. Ground waters in the active regime contain abundant $^3$H and anthropogenic $^{14}$C.
4. Comparison of long-term discharge hydrographs with precipitation records demonstrates that active regime ground waters: 1) are in direct hydraulic communication with the surface, 2) are recharged by modern precipitation, and 3) have large fluctuations in spring discharge rates which can be attributed to seasonal and climatic variability. High-flow/low-flow discharge rates vary as greatly as 600 gpm to nearly dry; however, most high flow rates are less than 50 gpm.
5. Despite the seasonal variability in discharge rates, the solute concentrations of active region ground waters do not exhibit significant seasonal variability.
6. The inactive regime includes groundwater in sandstone channels in the North Horn, Price River, and Blackhawk Formations which are not in direct hydraulic communication with the surface (i.e. greater than about 500 to 1,000 feet from cliff faces). Mine workings are largely part of the inactive regime. The sandstone channels are vertically and horizontally isolated from each other and when encountered in mine workings are usually drained quickly. Coal seams are hydraulic barriers to groundwater flow. The blanket sands of the Star Point Sandstone are also largely in the inactive zone. Except where exposed near cliff faces, faults encountered in mine workings are part of the inactive regime. Except near cliff faces, faults are not conduits for vertical hydraulic communication between otherwise hydraulically isolated pockets of groundwater.
7. Inactive region groundwater systems contain old groundwater (i.e. 2,000 to 12,000 years), and are not influenced by annual recharge events or short term climatic variability.

8. In-mine inactive regime ground waters occur in nearly stagnant, isolated zones which have extremely limited hydraulic communication with other inactive regime ground waters in the vicinity of mine workings and with near-surface active regime ground waters as evidenced by the following:

    a) Ground waters discharging into mine openings have $^{14}C$ ages ranging from 2,000 to 12,000 years
    b) Roof drip rates rapidly decline when water is encountered in the mine indicating that the saturated zone above the coal seam is not hydraulically continuous and has a limited vertical and horizontal extent.
    c) Unsaturated conditions have been identified in boreholes drilled vertically into sandstone channels located above coal seams.

9. The fact that inactive region ground waters encountered in mine openings do not have an infinite age means that, at some time, there has been some hydraulic communication with the surface. This communication is extremely limited as illustrated by calculated steady state recharge-discharge rates of faults and sandstone channels in the inactive zone which range from 0.001 to 1.23 gpm.
10. Groundwater in the Star Point Sandstone is part of the inactive regime as evidenced by the 6,000 year $^{14}C$ age of the sample from well TM-3. In the down dip direction along the axis of the Straight Canyon Syncline, potentiometric pressures in the Spring Canyon member results in upwelling of groundwater into Hiawatha seam mine openings. Such upwelling may locally reduce the pressure in the Spring Canyon member.
11. Aerially extensive groundwater regimes in the lower Blackhawk Formation and Star Point Sandstone do not exist within the lease area. Therefore, it is not meaningful to create piezometric surface maps of these systems.
12. Stream flow is dependent on snow melt, precipitation and thunderstorm activity. There is no apparent hydraulic communication between stream flow and groundwater encountered in mine openings.
13. The groundwater discharging into the Rilda Canyon alluvial collection system is of modern origin and is closely tied to seasonal recharge. This is evidenced by its modern radiocarbon and $^{3}H$ contents and by the discharge hydrographs. The alluvial groundwater is not related to the groundwater encountered in the mines.
14. The groundwater discharging in Cottonwood Canyon near Cottonwood Spring and Roans Spring discharges from glacial deposits and is of modern origin. The radiocarbon and $^{3}H$ contents of this water indicate a modern origin. The water in the shallow glacial deposits is not related to the groundwater encountered in the mines.

In addition to the study conducted in 1996, Mayo & Associates were retained in 2000 to investigate hydrologic resources of the Mill Fork ~~permit~~ Area and adjacent areas. The purpose of this investigation is to 1) characterize the groundwater and surface water systems in the Mill Fork ~~permit~~ Area, and 2) determine the probable hydrologic consequences of underground coal mining to surface waters and ground waters within the Mill Fork ~~permit~~ Area. The hydrology and hydrogeology of the Mill Fork ~~permit~~ Area area have been evaluated by analyzing: 1) solute and isotopic compositions of surface waters and ground waters, 2) surface water and groundwater discharge data, 3) piezometric data, and 4) geologic information (refer to Appendix B for complete details).

## 6. Chemical Evolution of Groundwater (excerpt from Mayo & Associates Study - Appendix B)

### *a. Chemical Reactions*

Solute compositions of groundwaters are the result of interactions between groundwater and bedrock lithology and between groundwater and atmospheric and soil gases. The general reactions responsible for the chemical evolution of groundwaters in the vicinity of the study area and inside the coal mines are described below:

Groundwater acquires most of its $CO_{2(g)}$ in the soil zone where the partial pressure of $CO_2$ greatly exceeds atmospheric levels. This $CO_2$ combines with water to form carbonic acid according to

$$CO_{2(g)} + H_2O = H_2CO_3 \quad (1)$$

Carbonic acid dissociates into $H^+$ and $HCO_3^-$ as

$$H_2CO_3 = HCO_3^- + H^+ \quad (2)$$

The $H^+$ ions temporarily decrease the pH of the water but are quickly consumed by the dissolution of carbonate minerals that are abundant in the soil zone and in most aquifers. Carbonate mineral dissolution is represented as

$$2H^+ + CaMg(CO_3)_2 = Ca^{2+} + Mg^{2+} + 2HCO_3^-, \text{ and} \quad (3)$$
(dolomite)

$$H^+ + CaCO_3 = Ca^{2+} + HCO_3^- \quad (4)$$
(calcite)

The net effect of reactions 2 through 4 is to increase the pH and the $Ca^{2+}$, $Mg^{2+}$, and $HCO_3^-$ contents of waters. Dissolution of gypsum, which is present in minor amounts in many formations in the region, can elevate the

$Ca^{2+}$ and $SO_4^{2-}$ contents in the absence of additional $CO_{2(g)}$ and $H^+$ according to

$$CaSO_4 \cdot 2H_2O = Ca^{2+} + SO_4^{2-} + 2H_2O \quad (5)$$
(gypsum)

Elevated $Na^+$ concentrations may result from either the dissolution of halite or from ion exchange on clay particles or on sodium zeolites (Mayo and others, 2000). Halite dissolution will increase the overall solute concentration (i.e. TDS) and will yield equal $Na^+$ and $Cl^-$ contents when the solute compositions are reported in the meq/l units. Halite is not abundant in the study area. Ion exchange will not directly elevate the overall solute content, but will result in increased $Na^+$ concentrations with corresponding decreases in $Ca^{2+}$ and/or $Mg^{2+}$ concentrations. Halite dissolution may be represented as

$$NaCl = Na^+ + Cl^- \quad (6)$$

And the ion exchange may be represented by reactions involving the sodium zeolite analcime,

$$2NaAlSi_2O_6 \cdot H_2O + Ca^{2+} = Ca(AlSi_2O_6)_2 \cdot H_2O + 2Na^+, \quad (7)$$

$$2NaAlSi_2O_6 \cdot H_2O + Mg^{2+} = Mg(AlSi_2O_6)_2 \cdot H_2O + 2Na^+, \quad (8)$$

or clay mineral exchange which may be represented as

$$Ca^{2+} + \text{Na-clay} = 2Na^+ + \text{Ca-clay} \quad (9)$$

$$Mg^{2+} + \text{Na-clay} = 2Na^+ + \text{Mg-clay} \quad (10)$$

## 7. Solute Compositions

Stiff (1951) diagrams representing mean solute compositions of groundwater, streams, and springs at the surface are shown in Appendix B Figure 22. Mean solute compositions of each spring and geologic formation are listed in Appendix B Table 2. The solute compositions of ground waters and surface waters in the study area are shown graphically on a Piper plot in Appendix B Figure 23. Calculated mineral saturation indices are listed in Appendix B Table 3.

### *a. Streams*

#### *(1) Crandall Canyon Drainage*

Water quality samples taken below the confluence of the north and south forks of Mill Fork Creek have a mean TDS of about 300 mg/l and are of the $Ca^{2+}$-$Mg^{2+}$-$HCO_3^-$ type with lesser amounts of $SO_4^{2-}$ (Appendix B Table 2). This water includes drainage from the Mill Fork ~~permit~~ Area as well as the area to the north.

*(2) Mill Fork Canyon Drainage*

Water quality samples taken below the confluence of the north and south forks of Crandall Creek have a mean TDS of about 480 mg/l and are of the $Ca^{2+}$-$Mg^{2+}$-$HCO_3^-$ type with lesser amounts of $SO_4^{2-}$ (Appendix B Table 2). Most of this water originates in the Mill Fork ~~permit~~ Area.

*(3) Rilda Canyon Drainage*

Water quality samples taken below the confluence of the north and south forks of Rilda Creek have a mean TDS of about 400 mg/l and are of the $Ca^{2+}$-$Mg^{2+}$-$HCO_3^-$ type (Appendix B Table 2). This water is mostly drainage from the Mill Fork ~~permit~~ Area.

*b. Springs*

The solute compositions of ground waters from nearly all of the springs in the Mill Fork ~~permit~~ Area are of similar chemical type (Appendix B Table 2). This is seen in the similarity of the shapes of the Stiff diagrams in Appendix B Figure 22, and the clustering of the data points on the Piper plot in Appendix B Figure 18. All of the springs in the Mill Fork ~~permit~~ Area for which chemical analyses are available are of the $Ca^{2+}$-$Mg^{2+}$-$HCO_3^-$ type with variable amounts of $SO_4^{2-}$. This chemical type is consistent with the dissolution of carbonate minerals in the presence of soil zone $CO_{2(gas)}$ according to equations 1-4 above.

Mineral saturation calculations indicate that most of the springs and streams in the study area are at or above saturation with respect to the carbonate minerals calcite and dolomite (Appendix B Table 3). What this means is that the chemistry of the spring water is near equilibrium with respect to these minerals, and thus there is not a thermodynamic tendency to dissolve additional carbonate minerals if these are encountered in the groundwater system. Waters with saturation indices less than log = -0.1 have a thermodynamic tendency to dissolve the mineral species should they be encountered in the groundwater system and waters with a saturation indices greater than log = 0.1 have a thermodynamic tendency to precipitate the mineral species.

For additional dissolution of carbonate minerals to occur, an influx of $CO_2$(g) into the groundwater system must occur. Common sources of $CO_2$(g) in this environment include $CO_2$ produced by root respiration and organic decay in the soil zone and bacteriological processes resulting in the

oxidation of $CH_4$ (methane). No surface or groundwater in the study area is near saturation with respect to gypsum. What this indicates is that, if gypsum is encountered along a waters flow path, dissolution of the gypsum will occur, resulting in elevated $Ca^{2+}$ and $SO_4^{2-}$ concentrations. Groundwater from the Blackhawk Formation and Star Point Sandstone encountered in nearby mine environments is supersaturated with respect to both calcite and dolomite (Appendix B Table 3) indicating that the water has the thermodynamic tendency to precipitate these minerals.

TDS concentrations of springs in the study area fall in the narrow range of 207 to 390 mg/l. A probability plot of the ordered ranking of the TDS of ground waters collected during the 2000-2001 spring and seep survey (Appendix B Figure 24) indicate a single population with a normal distribution. The fact that all of the Mill Fork ~~permit~~ Area springs discharging from alluvial systems, the North Horn Formation, Price River Formation, Castlegate Sandstone, and Blackhawk Formation have the same chemical character (Appendix B Table 2; Figures 22 and 23) is of particular significance. In other areas in the Wasatch Plateau, bedrock springs commonly have a broader range of TDS and chemical type, which is related to the bedrock formation from which the springs discharge (Danielson and others, 1981; Mayo and Associates, 1997d; Mayo and Morris, 2000).

The mean TDS for each geologic formation ranges from 253 mg/l in the North Horn Formation to 322 mg/l in the Price River Formation. That there is not a greater variability in TDS, or a greater number of groundwater types represented in the springs in the study area implies that there is not a great deal of variation in the soil zone processes or mineralogy of the matrix of the groundwater systems from which these springs emanate. We believe that the lack of variability in groundwater solute chemistry occurs because the groundwater systems that support springs in the area flush large quantities of groundwater through the thick soil zone and shallow fractured bedrock. Over thousands of years, some of the soluble minerals which were once present in the shallow bedrock and in the soil have been leached away. Because these groundwater systems do not come into contact with rocks deeper in the geologic formations (which vary substantially in their soluble mineral contents) there is little variation in the chemical type of groundwater.

Although there is little variability in the chemical type and TDS of groundwater discharging from springs in the Mill Fork ~~permit~~ Area, there

is considerable variability in the TDS and solute compositions of spring discharge waters and the solute composition of spring discharging from the Blackhawk Formation in the nearby Trail and Cottonwood Mine areas (Appendix B Table 2, Figure 23). We interpret the overall greater TDS and degree of chemical variability in the Blackhawk Formation in the Trail and Cottonwood Mine waters as a result of great precipitation variability in the Trail and Cottonwood Mine areas. Except for Joes Valley Alluvium, Mill Fork ~~permit~~ Area ground waters recharge and discharge from very wet upland areas. Trail and Cottonwood Mine groundwater recharge and discharge from a variety of elevations and recharge domains.

*c. In-Mine Groundwater*

Because the Mill Fork State Lease (now UTU-88554) was a new lease area that did not have existing underground workings, the solute compositions of in-mine groundwater can only be inferred from compositions of in-mine waters in nearby mines. Extensive in-mine samples of Blackhawk Formation roof drip water are available from Energy West's mines which include Cottonwood, Wilberg, Trail Mountain, and Deer Creek (Appendix B Table 2). A limited number of in-mine samples (Table 2) from the Star Point Sandstone are also available from the Deer Creek and Cottonwood Mines (Mayo and Associates, 1997d) and from public documents for the Crandall Canyon Mine (Mayo and Associates, 1997a).

*(1) Blackhawk Formation*

In-mine roof drips from the Blackhawk Formation are of the $Ca^{2+}$-$Mg^{2+}$ -$HCO_3^-$ -$SO_4^{2-}$ type with appreciable amounts of $Na^+$ (Appendix B Table 2). These ground waters have elevated TDS contents relative to Blackhawk spring waters in the Mill Fork ~~permit~~ Area and are generally chemically dissimilar to springs in the Mill Fork ~~permit~~ Area (Appendix B Figure 23). The two spring samples from the Deer Creek and Cottonwood Mine areas (Appendix B Table 2) have similar solute contents as the in-mine samples. Mayo and others (2000) found the elevated TDS in coal mine roof drip water to be the result of a cascading series of chemical reactions involving the oxidation of pyrite which increases the $SO_4^{2-}$ concentration and releases $H^+$ ions. The $H^+$ ions are consumed by dissolution of additional carbonate minerals (i.e., calcite and dolomite) elevating the $Ca^{2+}$ and $Mg^{2+}$ contents. In the process acid mine drainage (AMD) is prevented. Ion exchange of $Ca^{2+}$ and $Mg^{2+}$ on the sodium zeolite analcime increases the $Na^+$ contents.

We anticipate similar in-mine processes will occur in the Mill Fork ~~permit~~ Area.

*(2) Spring Canyon Member*

The solute chemical composition of groundwater in the Spring Canyon Member beneath existing mine workings is highly variable (Appendix B Table 4). Conductivities range from 500 to 2,287 µS/cm. $Ca^{2+}$ concentrations range from 5.5 to 64 mg/l and $Mg^{2+}$ concentrations range from 5.1to 41 mg/l. $Na^{+}$ concentrations range from 14 to 550.6 mg/l and $Cl^{-}$ concentrations range from 5.0 to 221.3 mg/l. The large spatial variations in solute chemistry are attributed to the influence of inter-bedded Mancos Shale tongues which are present in some locations and not in others and are known to contain soluble minerals. The variations in $Na^{+}$ are likely the result of the presence or absence of clays with ion exchange capacity. Ion exchange commonly results in elevated $Na^{+}$ concentrations at the expense of decreased $Ca^{2+}$ or $Mg^{2+}$ concentrations.

That the solute chemistry in the Spring Canyon Member is not uniform beneath existing mines suggests that there is a partitioning of groundwater systems in the member. This condition is likely the result of inter-bedded lower-permeability layers in the Star Point Sandstone which partition individual sandstone bodies. These findings are substantiated by monitoring well data from 6 wells in the Trail and East Mountain areas (Appendix B Section 7.3) and are significant in that they strongly suggest that the Spring Canyon Member does not act as a single regionally continuous aquifer, but rather it supports a series of smaller, discrete groundwater systems.

*(3) Joes Valley Fault System*

Ground waters in the Joes Valley Fault system and associated synthetic faults and fractures have been observed in the Crandall Canyon Mine. Data from a public domain document (Mayo and Associates, 1997a, c) indicate the water is of the $Ca^{2+}$ -$Mg^{2+}$ -$HCO_3^-$ type. This water type is consistent with the dissolution of carbonate minerals in the presence of soil zone $CO_{2\ (gas)}$. Slightly elevated $SO_4^{2-}$ concentrations are consistent with dissolution of minor amounts of gypsum. The relatively low mean $Na^+$ concentration (3.7 mg/l; 0.17 meq/l) indicates that appreciable ion exchange has not occurred. $Na^+$ and $Cl^-$ contents, in meq/l, are essentially the same, indicating halite dissolution as the $Na^+$ source.

## 8. $\delta\ ^2H$ and $\delta\ ^{18}O$

The $\delta\ ^2H$ and $\delta\ ^{18}O$ composition of a water molecule falling as precipitation is determined by the temperature at which nucleation of the water droplet occurs. However, other effects related to the bulk composition of the water vapor phase, such as cloud rainout and orographic effects, also can affect the isotopic composition of precipitation.

The stable isotopic compositions of waters are usually analyzed relative to the Meteoric Water Line (MWL). The MWL is empirically derived from the worldwide plotting locations of coastal zone precipitation and is defined by the equation $\delta\ ^2H = 8\ \delta\ ^{18}O + 10$ ‰ (See Appendix B for further discussion of the MWL). Precipitation that forms under cooler conditions will plot lower (i.e. more negatively) along the MWL than will precipitation that forms under warmer conditions.

Except for unusual conditions such as geothermal heating above about 100°C, the $\delta\ ^2H$ and $\delta\ ^{18}O$ composition of a groundwater is set at the time of recharge and is not affected by subsurface conditions such as groundwater residence time and mineral dissolution and precipitation reactions. In other words, the recharge and flow history of a groundwater can be evaluated independently of the solute content of the water using stable isotopic compositions.

The $\delta\ ^2H$ and $\delta\ ^{18}O$ composition of both in-mine ground waters and ground waters from springs, streams, and wells in the study area are listed in Appendix B Table 5 and are plotted on Appendix B Figure 25. Laboratory reporting sheets are presented in Appendix B. All ground waters in the study area plot near the meteoric water line indicating a meteoric recharge origin (i.e. rain and snow).

Based on their stable isotopic compositions, ground waters from within both the Energy West and Crandall Canyon Mines are readily distinguishable from each other and from springs and creeks in the Mill Fork ~~permit~~ Area. These three populations are statistically different from each other at the 95% confidence level. The Mill Fork Spring samples tend to plot more positively relative to the meteoric water line than do the in-mine waters, indicating that the near-surface ground waters recharged under different climatic conditions. The more negative composition of the in-mine ground waters is probably the result of paleo-recharge during cooler, wetter times. The stable isotopic composition of water seldom changes significantly after infiltration into the groundwater system. What this suggests is that modern groundwater systems in the upland areas overlying the mine area are not the primary source of recharge to the groundwater systems encountered in the mines.

## 9. Groundwater Ages ($^{3}H$ and $^{14}C$)

The concept of groundwater age is difficult to define because water arriving at a well or spring seldom travels via pure piston flow. Instead it is usually a mixture of water molecules that recharged at different locations and at different times, thus water has no unique age. It is therefore best to think of a groundwater "age" as the *mean residence time* of the water sampled at the well or spring.

In this investigation, two unstable isotopes, tritium ($^{3}H$) and carbon-14 ($^{14}C$) have been used to evaluate mean residence times. Tritium is a qualitative tool indicating if groundwater has a component of water that recharged since about 1954. Groundwater that recharged prior to about 1954 will contain essentially no tritium (Appendix B). Carbon-14 provides information regarding the number of years that have elapsed since the groundwater became isolated from soil zone gases and near-surface waters. Like tritium, $^{14}C$ can indicate if groundwater has a component that recharged since the 1950s. Ground waters with $^{14}C$ contents greater than about 50 percent modern carbon (pmc) contain anthropogenic (i.e., human-induced) carbon associated with atmospheric nuclear weapons testing. It is not uncommon for groundwater issuing from a spring or occurring in a well to be a mixture of old (i.e. containing no $^{3}H$) and modern water.

Groundwater ages have been calculated for 27 springs, 14 in-mine locations, and 6 Star Point Sandstone wells (Appendix B Table 5, Figure 26). All spring waters, except for spring 18-4-1 which is located in the southwestern portion of Trail Mountain, contain anthropogenic carbon and appreciable amounts of $^{3}H$ and are, therefore, modern. These springs issue from alluvial systems, the North Horn Formation, the Price River Formation, the Castlegate Sandstone, and Blackhawk Formation.

Spring 18-4-1 issues from the Blackhawk Formation-Castlegate Sandstone contact at the down plunge end of the Straight Canyon Syncline (Appendix B Plate 1) and is not in the

Mill Fork ~~permit~~ Area. The spring water does not contain water that recharged since 1954; however, the water was likely recharged less than a few hundred years ago as is indicated by its $^{14}C$ content.

Most groundwaters collected inside the Cottonwood/Wilberg and Deer Creek Mines contain essentially no tritium (Appendix B Table 5) and have mean $^{14}C$ ages ranging from 2,000 to 12,000 years. Roof drip waters associated with faults (i.e., 1.5N X 29, 6W X 20, and MN-ME) contain waters 2,000 to 7,000 years old and are not in hydraulic communication with the surface (Appendix B Table 5). Both roof drip (i.e. Blackhawk Formation) and wells in the Spring Canyon Member of the Star Point Sandstone in the Crandall Canyon Mine generally have groundwater ages of 13,000 – 19,000 years. These waters contain essentially no tritium and thus represent groundwater systems that are essentially hydraulically isolated from modern near surface hydrologic phenomena.

As discussed in Appendix B Section 7.2.3, two in-mine roof drip samples associated with faults, TW-10 (Roans Canyon) in the Deer Creek Mine and 5$^{th}$ West (Joes Valley Fault) in the Crandall Canyon mine, have $^{3}H$ contents indicating a component of modern recharge.

Two wells completed in the Star Point Sandstone, CCCW-1S and TM-3, have mean groundwater residence times of 1,000 and 6,000 years, respectively. These two wells are both completed in the Spring Canyon tongue and appear to be located on approximately the same flow line. CCCW-1S is up gradient and near the recharge area as evidenced by the young $^{14}C$ age and the $^{3}H$ content. TM-3 is down gradient. Assuming that the two wells intercept groundwater along the same flow line, travel times can be calculated using the method described by Mooke (1980):

$$\Delta T = 8270 \ln (a_{k+1}^{14}/a_k^{14}) \qquad (11)$$

$$\Delta T = 5{,}300 \text{ years}$$

where:

| | | |
|---|---|---|
| $\Delta T$ | = | travel time (in years) |
| $a_{k+1}^{14}$ | = | $^{14}C$ activity of up-gradient sample |
| $a_k^{14}$ | = | $^{14}C$ activity of down-gradient sample |

Assuming the travel time of 5,300 years and a distance of 4 miles, the calculated flow velocity is approximately 0.25 feet per year.

## 10. Active and ~~In-Active~~Inactive Groundwater Zones

The overall pattern of groundwater flow and surface water-groundwater interactions in the Mill Fork ~~permit~~ Area and adjacent areas can be described by a fairly simple conceptual model involving both active and inactive groundwater flow regimes (Mayo and Morris, 2000 Appendix B). The model is illustrated in Appendix B Figure 27.

Active zone groundwater flow systems contain abundant $^{3}H$, have excellent hydraulic communication with the surface, are dependent on annual recharge events, and are affected by short term climatic variability. Tritium and carbon-14 "age" dating of spring waters in the study area demonstrate that all springs, except 18-4-1, issue from active zone groundwater systems and are of modern origin (Appendix B Table 5, Figure 26). Groundwater in the active zone generally circulates shallowly and has short flow paths. Because the springs in the Mill Fork ~~permit~~ Area and adjacent areas are not part of large, regional groundwater systems, hydrographs of their discharge rates show both seasonal and climatic fluctuations (Appendix B Figure 12). During drought cycles, it is not uncommon for discharge from some springs in the active zone to completely cease.

The $\delta\ ^{2}H$ and $\delta\ ^{18}O$ compositions of Mill Fork ~~permit~~ Area springs relative to in-mine ground waters demonstrate that the Mill Fork ~~permit~~ Area springs are not part of the same groundwater systems that discharge in the mines (Appendix B Figure 25).

The active regime includes alluvial groundwater, all of the Flagstaff Limestone, and the near-surface exposures of all other bedrock formations. The "near surface" extends a few hundred feet vertically into the subsurface, about 500 to 1,000 feet into cliff faces and is controlled by fracturing, weathering, and the surface exposures of fluvial channel sands. Further into the cliff faces the discontinuous character of the channel sands prevents active groundwater flow.

Except for mountain fronts and cliff faces, the coal bearing lower Blackhawk Formation and the Star Point Sandstone are generally not exposed at the surface in the Mill Fork ~~permit~~ Area and are not part of the active zone. In Cottonwood Canyon, located south of Mill Fork ~~permit~~ Area, the Star Point Sandstone is within a few hundred feet of land surface and is part of the active zone as evidenced by the tritium content, 1.10 TU, in Well CCCW-1S (Appendix B Table 5). Elsewhere Star Point Sandstone samples have groundwater ages of 6,000 to 19,000 years. In the Mill Fork ~~permit~~ Area the lower Blackhawk Formation and Star Point Sandstone are not exposed near the land surface, except at cliff faces, and are not in the active zone.

Except for mining operations near cliff faces, the in-mine environment is generally not part of the active zone. However, in-mine groundwater containing tritium (i.e., 1 TU or more, Appendix B Table 5) in TW-10 (Roans Canyon Fault) and 5$^{th}$ West Fault (Joes Valley Fault-Genwal Mine) indicate that locally the inactive zone extends into the mine environment where fracture zones, that are associated with major faulting, are currently under tensional stress. The extension of the active zone into the mine environment along fractures is localized as evidenced by the absences of tritium and old $^{14}C$ ages in in-mine

groundwater collected elsewhere along the fracture zone (Appendix B Table 5).

Inactive zone groundwater systems contain old groundwater (i.e. 2,000 to 19,000 radiocarbon years, Appendix B Table 5), have very limited hydraulic communication with the surface and with other active groundwater flow systems, and are not influenced by either annual recharge events or short term climatic variability as evidenced by the decline in roof drip rates (Appendix B Figure 15). Groundwater in these systems tends to occur in sandstone channels in the North Horn, Price River, and Blackhawk Formations which are not in direct hydraulic communication with the surface (i.e. greater than about 500 to 1,000 feet from cliff faces). These sandstone channels are vertically and horizontally isolated from each other and when encountered in mine workings are usually drained quickly. The blanket sands of the Star Point Sandstone are also largely in the inactive zone.

Except for the immediate vicinity of Joes Valley Fault, we believe that groundwater intercepted in the Mill Fork ~~permit~~ Area will be part of the inactive zone and will not be in hydraulic communication with either near surface groundwater or surface water systems. Mining within 200 to 300 feet of Joes Valley Fault is problematic in that the area is under tension and deep groundwater may be part of the active zone.

Two fundamentally different groundwater regimes, active (near surface) and inactive (deep subsurface and in-mine) that occur in the vicinity of the Mill Fork ~~permit~~ Area and elsewhere in the Utah Coal District are due to the vertical and horizontal heterogeneity of the bedrock (Appendix B Section 5.3). The rock formations consist primarily of alternating and interpenetrating layers of somewhat permeable sandstone and impermeable shale and mudstone. Individual rock layers are generally not continuous over great horizontal distances. Rather, one rock facies commonly grades horizontally into another facies. Fluvial deposits consisting of sandstone channels, which locally support groundwater systems, typically interpenetrate with shale and mudstone units. Thus, layers of shale or claystone that have very low permeabilities encase individual sandstone layers both horizontally and vertically. Although the permeability of individual sandstone bodies may locally be relatively high, the ability of these rocks to transmit water horizontally over great distances is low because of the discontinuous nature of the sandstones. Due to the pervasiveness of low permeability shales and mudstones, the potential for vertical groundwater flow is minimal.

Because of the limited potential for groundwater to migrate vertically through the stratigraphic section, active zone recharge waters commonly infiltrate only into the soil zone and shallow, fractured bedrock. Most groundwater moves downward through the shallow subsurface until the first impermeable layer is encountered where it migrates laterally and is discharged at the surface as a spring or seep.

## 11. Regional Groundwater Systems

A report by the U.S. Geological Survey (Lines, 1985) states that there exists a regional aquifer in the lower Blackhawk Formation and Star Point Sandstone in the Wasatch Plateau. Lines also postulates that the regional aquifer is recharged by the downward migration of ground waters from overlying perched groundwater systems in the North Horn and Price River Formations. This idea is not correct. Ground waters encountered within mine openings in the lowermost Blackhawk Formation occur primarily within discontinuous sandstone channels. It is not uncommon for some of these channels to be completely dry, while others are partially or completely filled with water. Between these sandstone channels, the surrounding shales and claystones of the Blackhawk Formation are usually dry. The discontinuous nature of the saturated sediments in the lowermost Blackhawk Formation, and the unconfined conditions under which these ground waters exist do not support the idea of a deep, regional system with groundwater flowing from areas of recharge to areas of discharge.

Additionally, radiocarbon and tritium groundwater age dating indicates that groundwater in the shallow perched groundwater systems are modern (post-1954) and in-mine groundwater in the Blackhawk Formation and Star Point Sandstone are thousands of years old.

We believe that the presence of swelling clays and impermeable shales in the rocks in the unsaturated zone between the overlying perched systems and the Blackhawk Formation effectively prohibit downward vertical migration of waters from the perched systems. Lines (1985) analyzed cores taken from well (D-17-6) 27bda-1 and found the hydraulic conductivities of the shales and siltstones to be very low (i.e. $10^{-7}$ to $10^{-8}$ ft/day). One shale sample was found to be effectively impermeable even when a hydraulic pressure of 5,000 psi was applied.

Because there are no regionally extensive groundwater regimes in the lower Blackhawk Formation or Star Point Sandstone within the lease area, it is not possible to draw meaningful potentiometric surface maps of these systems.

Lines (1985) also reported that water was likely leaking from the Joes Valley Reservoir downward into the “lower Blackhawk / Star Point aquifer” in Straight Canyon. We believe that this is incorrect. Groundwater collected from well TM-3, which is completed in the Star Point Sandstone in Straight Canyon just below the reservoir, has a radiocarbon age of 6,000 years, while water in Joes Valley Reservoir is of modern origin. Water levels in TM-3 do not respond to seasonal fluctuations in the water level in Joes Valley Reservoir, indicating that there is little or no hydraulic communication between the reservoir and water in the Star Point Sandstone. Groundwater was sampled at UG-3 in the lower

Blackhawk Formation in the Trail Mountain Mine. This water has a radiocarbon age of 5,500 years, which is likewise not consistent with water from the reservoir.

## 12. Summary of 2001 Mayo & Associates Study

In summary, all groundwater encountered in springs monitored in the Mill Fork ~~permit~~ Area discharge from active, shallow groundwater systems. No evidence exists that suggests a large, regional-type aquifer occurs in the area. All of the springs analyzed in the study area exhibit large-scale fluctuations in discharge rates in response to the annual snowmelt event. The springs are also sensitive to longer-term variations in climate. Carbon-14 and tritium dating of spring and stream waters indicate that the springs contain anthropogenic (human-induced) carbon and levels of tritium consistent with recharge in the past 50 years. Stable isotopic $\delta\,^{2}H$ and $\delta\,^{18}O$ data from springs and streams at the surface indicate that the recharge sources for these groundwater systems are different from those that recharged the groundwater systems encountered in the mine environment.

Almost all groundwater encountered in in-mine environments <u>is not</u> related to shallow, active zone groundwater systems from which springs and streams discharge. $^{14}C$ dating indicates that groundwater entering the underground workings in most locations is thousands of years old. When groundwater is encountered in the mine, inflow rates commonly decrease rapidly and most inflows eventually dry up completely. This indicates that the groundwater systems encountered in the mine are not part of large regional groundwater systems. There is no relationship between groundwater inflow rates measured in the mine and the annual snowmelt event or long term climatic trends. This demonstrates a lack of hydraulic communication between the groundwater systems encountered in the mine and active zone groundwater systems near the surface.

## 13. Conclusions from 2001 Mayo & Associates Study

- Ground waters discharging from springs are part of active zone groundwater systems. Isotopic analysis indicates that groundwater from the active zone is of modern origin (recharged less than 50 years ago). Seasonal variations in discharge rates from active zone springs indicate that flowpath lengths are short and that groundwater travel times from recharge areas to discharge areas are generally less than one year. The abundance of shale and claystone units in the geologic section prohibits significant downward migration of active zone ground waters into deeper horizons.

- Analysis of the solute chemistry of ground waters discharging from springs and seeps indicate that depths of circulation in these systems are shallow. The modern groundwater ages of shallow ground waters in the study area support this conclusion.

- Groundwater encountered in most locations in the mines is many thousands of years

old. Groundwater in the Star Point Sandstone ranges from approximately 1,000 to 19,000 years old. Groundwater in the Blackhawk Formation within the mines ranges in age from about 2,000 to 14,000 years, whereas groundwater in the Joes Valley Fault system ranges in age between about 2,500 and 5,000 years. None of these groundwaters have appreciable tritium concentrations, indicating that no recharge has occurred in the past 50 years.

- Groundwater encountered in the northwest corner of the Crandall Canyon Mine discharges from a series of fractures located near the Joes Valley Fault. Tritium data indicate that a component of this water recharged in the past 50 years, whereas $^{14}C$ data indicate that another component recharged more than 3,500 years ago. This groundwater appears to originate from a sandstone channel in the mine roof.

- More than two-thirds of all non-alluvial springs in the Mill Fork ~~permit~~ Area discharge from the North Horn Formation. The abundance of springs in the North Horn Formation is the result of the large area of exposed North Horn in the upland areas where precipitation is greatest, and the presence of the abundant claystone and shale layers which inhibit significant downward migration of precipitation into the formation.

- The fact that Little Bear Spring discharges modern water and has large variations in discharge rates suggests that it is the discharge location of an active zone groundwater system. Because inactive zone groundwater systems in the Star Point Sandstone beneath the mine are tens of thousands of years old and do not exhibit seasonal variations in discharge, these groundwater systems are precluded as potential contributors to the discharge from Little Bear Spring. The very low permeability in the Star Point Sandstone beneath the mine indicates that diffuse flow through the Star Point Sandstone beneath the mine cannot contribute significant groundwater to the discharge from the spring.

- Limited data suggest the possibility that Little Bear Spring may receive significant recharge where the fracture system from which it emanates crosses streams and active zone groundwater systems in drainages south of Little Bear Canyon. The conditions in Mill Fork Canyon seem favorable for recharge to the spring.

### 14. Mine Dewatering

Water encountered within the Deer Creek and Wilberg/Cottonwood mines (Des-Bee-Dove was a dry mine) has generally been confined to the perched aquifer systems and fractures-faults associated with the Blackhawk Formation as discussed earlier. Water enters the mines through various avenues including roof leakers (drippers) from overlying fluvial

sandstone channels, bolt holes, tension cracks in the overlying strata, longwall caved areas, and where fractures or faults have been intersected by the mine workings. Excess water not utilized in the mining operation or for domestic use in the Mill Fork ~~permit~~ Area will be either pumped to storage areas or discharged from the Deer Creek Mine under approved UPDES permits (see Volume 9 Hydrologic Section: Appendix B for UPDES permit information). A complete description of the quality and quantity is reported in the annual Hydrologic Monitoring reports and also in the PHC section (R645-301-728).

## 15. Groundwater Rights and Users

Nine springs have been developed in Huntington Canyon to provide for domestic, industrial, and commercial water needs. Currently, Huntington City utilizes two springs in Huntington Canyon, Big Bear Canyon Spring and Little Bear Canyon Spring. The North Emery Water Users ~~Association~~ Special Services District also utilizes springs in Huntington Canyon to provide for domestic and industrial water needs in areas outside of Huntington City. The ~~Association~~ NEWUSSD is currently utilizing water from three springs in Rilda Canyon as well as from four other springs in the general area (refer to Volume 9 Hydrologic Section: Map HM1).

Some of the springs on East Mountain/Mill Fork Area have been developed for watering livestock by installing troughs, and JV-36 (located approximately 1 mile west of ~~the Mill Fork State Lease~~ UTU-88554) has been developed as a culinary water source for a cabin in the area. See Table MFHT-3 for a summary of the springs within the ~~permit~~ Mill Fork Area, their location, and any claims placed on the water they produce.

### *a. North Emery Water Users ~~Association~~ Special Services District*

Of concern to PacifiCorp is the proximity of proposed mining activities in Rilda Canyon to the Rilda Canyon Springs which currently serve as a culinary water source to the North Emery Water Users ~~Association~~ Special Services District (NEWU~~A~~SSD) serving some 410 connections. Due to the importance of these springs, a separate discussion is provided in Volume 9 Hydrologic Section.

### *b. Little Bear Spring*

A second spring system which has been developed for culinary purposes referred to as Little Bear Spring occurs east of the Mill Fork ~~permit~~ Area. Little Bear Spring is a large spring (average flow of approximately 300 gpm) which issues from the lowest member of the Star Point Sandstone (Panther Member) located approximately one and one half (1 ½ ) miles to the east of the Mill Fork ~~permit~~ Area boundary in Section 9, Township 16 South, Range 7 East. The spring was developed in 1960 by Huntington City and is currently maintained by Castle Valley Special Service District (CVSSD). Little Bear Spring provides sixty five (65) percent of the

culinary water for the cities of Huntington, Cleveland and Elmo.

As stated in the Mill Fork environmental assessment (EA) competed in 1997, Little Bear Spring flows continuously, with average monthly discharge ranging from two hundred (200) to four hundred forty (440) gpm (CVSSD, 1997). Flow varies seasonally, with a typical increase of twenty (20) to forty (40) percent in response to spring runoff. The lowest average monthly baseflow recently measured was one hundred ninety eight (198) gpm in April 1995 (refer to Appendix C: Little Bear Spring - for historical quality and quantity). Isotopic analyses performed to evaluate the age of water indicated that the spring discharges modern water, and has very similar composition to water in both Crandall and Huntington Creeks (Mayo and Associates, 1997). Further chemical analyses show that water from Little Bear is very similar to surface water in both Little Bear and Huntington Creeks. Water quality in the spring is good, requiring only chlorine treatment before it is suitable for consumptive use.

Based on previous reports and field observations (refer to Little Bear Spring reference list), the spring emanates from western fault of the Mill Fork graben. The graben is approximately one thousand (1,000) feet wide and trends from the southwest to the northeast at approximately north thirty (30) degrees east. Much of the geologic and hydrologic detail concerning the fault system was derive from the mining history of the Arco #4 mine located in Mill Fork Canyon. Mining in the #4 mine encountered the eastern fault (down thrown approximately thirty (30) feet on the west) of a small graben as entries were driven northwest from the portals in Mill Fork Canyon. Rock slopes were developed through the fault system down to the coal seam level. Mining proceeded across the graben to the western fault up thrown fault (up thrown approximately twenty nine (29) feet on the west). A second set of rock slopes were developed to access coal reserves to the west of the graben. Coal reserves diminished rapidly to the west and the mine was eventually closed and reclaimed. Mining across and within the graben encountered only minor quantities of groundwater and flow of Little Bear Spring was not impacted.

Isotopic sampling of water from Little Bear Spring indicates modern water (Appendix B Table 5), shows marked seasonal discharge variations and responds to short term climatic cycles indicates that it is supported by shallowly circulating groundwater. The groundwater that supports Little

Bear Spring is not related to the deep, old groundwater encountered in area coal mines (refer to Appendix B Groundwater Section).

Results of in-mine slug testing of the Star Point Sandstone beneath the Crandall Canyon Mine conducted by Genwal Resources (Mayo and Associates, 1997b) indicate that diffuse, matrix flow of groundwater through the Star Point Sandstone cannot be an important source of recharge to Little Bear Spring. Flow calculations using the hydraulic conductivities obtained from the slug testing and the approximate hydraulic gradient indicate that diffuse flow through the Star Point Sandstone is capable of yielding at most only a few gpm of groundwater discharge, which would represent only a very small percentage of the spring discharge. The ancient age of groundwater encountered in the Star Point Sandstone beneath the Crandall Canyon Mine adjacent to Little Bear Spring (19,000 years; Mayo and Associates, 1997a) supports this conclusion.

Mayo and Associates (Appendix B Reference List Mayo 1997a,b) suggested that Little Bear Spring is primarily recharged from surface water losses and alluvial groundwater losses in Mill Fork Canyon east of the Mill Fork ~~permit~~ Area (refer to Little Bear Spring reference list, Mayo & Associates studies June 1999 through November 2001 and AquaTrack Surveys December 1998 through November 2001).

*(1) Groundwater Flow Mechanisms*

The Mill Fork environmental assessment described three (3) mechanisms controlling flow to Little Bear Spring:

1. Water flowing through the Star Point Sandstone emerges at the spring location. Recharge for the spring is coming from the north and west, possibly supported by the Joes Valley Fault.

2. Recharge to the spring comes from the flow through the Star Point Sandstone from the north and northwest, and surfaces through fractures in the formation.

3. The trend of Huntington Creek follows a series of straight segments that are evident on topographic maps. The portion of Huntington Creek approximately two (2) miles north of the lease tract follows a north-south lineation. It has been suggested the trend of the creek in this area is controlled by a north-south

anomaly (possibly an unmapped fault) that runs south, through the northeast portion of the lease area (proposed lease delineation including the Little Bear drainage area) in Little Bear Canyon. Water from Huntington, Crandall Creeks and maybe Little Bear creeks enters this anomaly, and travels through it until it is intercepted by the Mill Fork Graben, where it is redirected to the northeast and emerges where the Mill Fork Graben fault zone intersects Little Bear Canyon. Comparison of the flow hydrographs for the spring and Huntington Creek show a strong correlation, suggesting that the water from the spring is derived from surface water sources. Spring flow has an apparent time lag of two (2) to four (4) years against flow in Huntington Creek. Additional flow may reach the spring by surface water seeping into the exposed outcrop of the Star Point Sandstone at nearby upgradient locations, or through direct infiltration of precipitation close to the spring source.

Additional studies completed after the publication of the Mill Fork EA (AquaTek, 1998 and 1999) have developed a fourth mechanism controlling flow:

4. Surface water from the upper reaches of Mill Fork Canyon flows down canyon recharging the alluvial deposits is intercepted by the southern extension of the Mill Fork graben, and then flows north along the fault and emerges in Little Bear Canyon. This flow mechanism was confirmed by a study conducted jointly by Mayo & Associates and the Forest Service (Little Bear Spring reference list: Mayo & Associates, November 2001)

As stated in the EA, given the most recent studies that indicate water from Little Bear spring is modern, chemically similar to surface waters in the area, and given the high discharge rates, it appears that the spring is supported by a system of faults and/or fractures that transmit surface water from the north and the south *(AquaTek Studies).* The hydraulic conductivity of the Star Point Sandstone is low, and gives rise to slow groundwater movement. As demonstrated by Hansen, Allen and Luce, assuming a five thousand (5,000) foot capture zone along the Mill Fork graben, a velocity of 0.013 ft/day through the Star Point, and aquifer height of forty five (45) feet, the potential discharge amount through the

Star Point for the spring would only be fifteen point two (15.2) gpm. This demonstrates that flow through the Star Point Sandstone itself cannot support the flow emanating from Little Bear spring.

*(2) Mill Fork Leasing Process*

As stated in the Mill Fork EA, on February 4, 1993, Genwal Resources, Inc. submitted Coal Lease Application UTU-71307 to the Bureau of Land Management (BLM), Utah State Office, to lease Federal Lands in the vicinity of Mill Fork Canyon.

The Mill Fork tract lies within the Huntington Canyon-Gentry Mountain and the Ferron Canyon, Cottonwood-Trail Mountain Multiple-Use Evaluation Areas as described in the Manti-La Sal National Forest Land and Resource Management Plan (Forest Plan). The Forest Plan Environmental Impact Statement (EIS) and Record of Decision make these areas available for consideration for coal leasing.

The first step in the leasing evaluation process was to delineate a tract. Tract delineation was completed by the BLM on October 2, 1996. Named the Mill Fork Tract, the area encompassed approximately six thousand four hundred forty (6,440) acres.

A no action alternative and three action alternatives were developed to provide a full range of reasonable alternatives that sharply define the significant issues.

A. Alternative 1 - No Action

*Forest Service would not consent to, and the BLM would not approve leasing.*

B. Alternative 2 - Offer for lease with standard BLM Lease Terms, Conditions and Stipulations

*Forest Service would consent to, and the BLM would approve, offering six thousand four hundred forty (6,440) acres, as delineated for competitive leasing. The lease*

*would only have the standard BLM terms, conditions and stipulations that are included on the BLM coal form.*

C. Alternative 3 - Offer for lease with application of Special Coal Leasing Stipulations for Protection of Non-Coal Resources

*Forest Service would consent to, and the BLM would approve, offering six thousand four hundred forty (6,440) acres, as delineated for competitive leasing. The lease would have the standard BLM terms, conditions and stipulations that are included on the BLM coal form along with eighteen (18) Special Coal Lease Stipulations from Appendix B of the Forest Plan and two (2) additional tract specific stipulations.*

D. Alternative 4 - Offer a modified tract for lease with application of Special Coal Lease Stipulations for Protection of Non-Coal Resources

*In addition to those activities addressed in Alternative 3, Alternative 4 specifically focuses on concerns identified as water issues. The portion of the lease tract east of the northeast quarter of Section 7 is removed from the leasing offering, to protect the water quality and quantity of Little Bear watershed and spring, reducing the overall tract by eight hundred eighty (880) acres.*

Based on the USFS Record of Decision, the BLM offered for lease the Mill Fork Tract excluding the eight hundred eighty (880) acres (total tract approximately five thousand six hundred sixty (5,660) acres). The modified lease excluded the northeastern portion of the lease tract which encompasses the Little Bear Canyon watershed (designated as a Municipal Water Supply [MWS]). Exclusion of the eight hundred eighty (880) acres will protect the Little Bear MWS and minimize potential disruption or degradation to surface and groundwater resources.

On June 6, 2000, Genwal Resources Inc. re-applied for the eight hundred eighty (880) acres which were excluded during the 1997 Environmental Assessment for the Mill Fork Tract. Bureau of

Land Management and United States Forest Service evaluated the Lease-By-Application (LBA U-78593) referred to as the South Crandall Canyon Tract and issued the FONSI on February 18, 2003. Genwal Resources acquired the South Crandall coal lease on June 12, 2003.

PacifiCorp cooperated with Huntington City, Elmo City, Cleveland City and CVSSD in developing a comprehensive mitigation plan. The agreement was signed on July, 2004. As part of the agreement, PacifiCorp constructed a water treatment plant in 2005 located near at the existing Huntington City plant in Huntington Canyon. The mitigation agreement information is found in Appendix D of Volume 9.

## B. EXISTING SURFACE RESOURCES

Presented within this section of the report is the regional hydrologic setting as well as the site specific description of hydrologic surface water characteristics of the ~~permit~~ Mill Fork Area.

### 1. Regional and ~~Permit~~ Mining Area Surface Water Hydrology

The PacifiCorp ~~permit~~ lease area is located in the headwater region of the San Rafael River Basin. The surface drainage system of the ~~permit~~ lease area is divided into two major drainages. The southwest portion forms part of the Cottonwood Creek drainage and the northeast portion contributes to the Huntington Creek drainage (see Hydrologic Map MFS1830D). The Huntington Creek drainage covers approximately seventy percent (70%) of the East Mountain leases held by PacifiCorp; the remaining thirty percent (30%) is within the Cottonwood drainage system.

Huntington and Cottonwood creeks drain about 300 square miles of the Wasatch Plateau in central Utah. Altitude changes rapidly across the Wasatch Plateau with steep canyon sides and high mountain peaks. Altitudes range from 6,000 to 10,700 feet. Average precipitation generally increases with altitude and ranges from ten (10) inches near the town of Huntington to thirty (30) inches in the upper reaches of Huntington and Cottonwood creeks. Most of the precipitation occurs during winter months in the form of snow.

Water use upstream from Castle Valley (the monoclinal valley containing most of the agricultural land) is primarily for stock watering and industrial purposes (coal mining and electrical power generation). Within Castle Valley, agriculture and power production utilize nearly all of the inflowing water (Mundorff, 1972) with minimum flows in the gaged streams occasionally approaching zero. Transbasin diversions occur throughout the area.

In general, the chemical quality of water in the headwaters of the San Rafael River Basin is excellent, with these watersheds providing most of the domestic water needs to the people below; however, quality rapidly deteriorates downstream as the streams cross shale formations (particularly the Mancos Shale in and adjacent to Castle Valley) and receive irrigation return flows from lands situated on Mancos derived soils (Price and Waddell, 1973). Dissolved solids concentrations range from about 100 to 600 mg/l in the mountain regions and from 600 to 6000 mg/l in Castle Valley.

Huntington Creek above the USGS stream gaging station (0318000) near the town of Huntington drains approximately 190 square miles. Storage reservoirs regulate runoff from fifty four square miles in the upper part of Huntington Creek. The average channel gradient of Huntington Creek above Huntington is about 100 feet per mile (1.9 percent). Danielson et al. (1981) estimate the average annual precipitation on the Huntington Creek drainage to be on the order of twenty six (26) inches. The average discharge at the USGS gage near Huntington is approximately ninety six (96) cubic feet per second (70,000 acre feet per year). The USGS estimates that "during most years, about 65 percent of the annual discharge at the Huntington Creek station (09318000) occurs during the snowmelt period (April-July)" (Danielson et al., 1981, p. 110). While the majority of stream flows are due to snow melt, thunderstorms of high intensity are common in the area during the summer months. The largest annual peak flows have been caused by thunderstorms. Of the measured annual peak flows on Huntington Creek near Huntington, eight annual events have been greater than 1600 cfs (about a 10 year return period), all of which occurred during July, August, or September. The peak discharge of record was 2500 cfs on August 2 or 3, 1930.

Cottonwood Creek above Straight Canyon drains approximately 21.9 square miles. The average channel gradient of Cottonwood Creek above Straight Canyon is 300 feet/mile (5.7 percent). Only a short period of record (October 1978 to present) is available for the USGS stream gaging station (09324200) on Cottonwood Creek above Straight Canyon. Danielson et al. (1981) estimate the average annual precipitation to be on the order of twenty-two (22) inches, or 26,000 acre feet, on the Cottonwood Creek drainage above Straight Canyon. Danielson et al. (1981) also estimate that only two percent of the precipitation on Cottonwood Creek above Straight Canyon leaves the basin as stream flow compared to thirty percent for Huntington Creek above Huntington. The suggested reasons for the wide difference in percent of precipitation contributing to stream flow are: 1) Cottonwood Creek Basin has a greater proportion of area with southern exposure with more gradual slopes than Huntington Creek Basin and 2) possible subsurface movement of water through fractures associated with the Joe's Valley Fault. About seventy percent of

the total discharge at the Cottonwood Creek station above Straight Canyon for the water year 1979 occurred during the snow melt period (April-July).

Sixty years of data are available for the gaging station on Cottonwood Creek near Orangeville (09324500). The drainage area above Orangeville contributing to Cottonwood Creek is approximately 208 square miles. Cottonwood Creek has an average discharge near Orangeville of about ninety-five (95) cfs, or 69,000 acre feet per year. The maximum and minimum discharges of record on Cottonwood Creek near Orangeville are 7,220 cfs (August 1, 1964) and 1.2 cfs (April 8, 1966), respectively.

Surface drainages within and adjacent to the Mill Fork ~~State Lease\UTU-84285~~ Area include portions of Crandall, Mill Fork, Right Fork of Rilda, and un-named tributaries of Indian Creek. Crandall, Mill Fork and the Right Fork of Rilda drain the east slope of East Mountain and generally flow in an east-west direction from the headwaters to Huntington Creek located east of the ~~permit~~ Mill Fork Area. Un-named drainages associated with Indian Creek drain the western slope of East Mountain. Indian Creek flows to Lowry Water and then to Joes Valley.

State of Utah designated standards for water quality in the Huntington Canyon and Indian Creek are 1C, 2B, 3A and 4, corresponding to domestic, recreation, cold water fisheries and irrigation beneficial uses.

*a. ~~Permit~~ Lease Area Watershed Characteristics*

Water sources within the mine plan area include springs and seeps, which were discussed earlier in the Existing Groundwater Resources section of this report. There are no major water bodies located within or immediately adjacent to the mine plan area.

All of the streams within the Mill Fork ~~permit~~ Area are ephemeral or intermittent except for a portion of Crandall Creek (see table below). Elevations in the Mill Fork ~~permit~~ Area range from approximately 7880 feet in Crandall Canyon to 10,728 feet at Bald Mountain peak. General land slopes in the ~~permit~~ Mill Fork Area range from near vertical along the Castlegate Sandstone escarpment to less than four percent. Vegetative cover consists of sagebrush, juniper, and grasses on the south-facing slopes and dense conifer and aspen complexes on the north facing slopes. The following table outlines the stream classifications for the individual drainage systems:

| **MILL FORK ~~PERMIT~~ AREA<br>DRAINAGE SYSTEM<br>Stream Drainage Area and Classification** | | | | |
|---|---|---|---|---|
| **Major Drainage** | **Sub-Drainage** | **Drainage Area (acres)** | | **Stream Classification** |
| | | **Total** | **Within ~~Permit~~ Lease/Right-of-Entry Boundary** | |
| *Huntington Creek** | Crandall Creek | 4000 | 1770 | Perennial |
| | Mill Fork Creek | 4020 | 1195 | Intermittent |
| | Right Fork Rilda Canyon | 5460 | 810 | Intermittent |
| *Cottonwood Creek* | Un-Named Drainages associated with Indian Creek | NA | 2047 | Ephemeral |
| * Little Bear Canyon is not included within the boundaries of the lease and will not be included in the analysis. The Mill Fork EA completed in 1997 excluded 880 acres for protection of the Little Bear watershed. | | | | |

*(1) Huntington Creek Drainage System*

*(a) Crandall Creek*

Crandall Creek is a perennial stream and is the northern most surface drainage system within the ~~permit~~ Mill Fork Area. (Refer to Hydrologic Map: MFS1830D). The drainage area encompasses approximately 4,000 acres of which 1,770 is within the ~~permit~~ right-of-entry area. Surface facilities of the Genwal Resources coal mine are located in Crandall Canyon in Section 5, Township 16 South, Range 7 East. Genwal's coal leases are located generally to the west and north of the Mill Fork ~~permit~~ Area. The Crandall Creek drainage system has been extensively undermined by the Crandall Canyon Mine.

According to the United States Geological Survey (USGS), discharge from Crandall Creek ranged from a minimum of 0.24 cubic feet per second (cfs) to 97 cfs from 1979 to 1984 (Danielson, 1981). Based on the unit hydrographs developed for Crandall Canyon, approximately eighty (80) percent of the streamflow occurs between April and July. Suspended sediment loads in Crandall Canyon were measured in 1978 and 1979 and were found to range between 0.08 to 0.41 tons/day based on flow variations (Danielson 1981). Crandall Creek immediately below the Genwal Mine was designated as a class A1 channel type (steeper than 4% with boulder or bedrock channel) by Raleigh Consultants in a 1992 survey of drainages in the Huntington watershed.

Crandall Canyon is extensively monitored by Genwal Resources including ground and surface water resources.

*(b) Mill Fork Canyon*

Mill Fork Creek is an intermittent stream centrally located within the ~~permit~~ Mill Fork Area. (Refer Hydrologic Map MFS1830D). The drainage area encompasses approximately 4,020 acres of which 1,195 is within the ~~permit~~ right-of-entry area. Numerous springs are located in the headwaters of Mill Fork in Sections 11, 12, 13 and 14. Based upon field observations, flow exists in upper reaches during base flow conditions from the headwaters in Section 11 to the lower contact of the Castle Gate Formation. From this point the drainage is dry except for short reaches due to the contributions of springs MF-7 and MF-8A. The drainage is again dry below spring MF-8A until the confluence of the two forks in Section 17. Due to the contribution of flow from spring MF-213, flow in the drainage exists below the forks for approximately one quarter mile. Again, the drainage is dry from this point in Section 17 to where the flow reemerges in Section 21 below the reclaimed Beaver Creek #4 Mine. Flow below the mine exists for approximately one half (½) mile. Mining in the Beaver Creek #4 was restricted to the lower portions of the Mill Fork drainage system in Sections 16 and 17 (refer to Hydrologic Map MFS1830D). During the operational and reclamation phase of the #4 Mine, Beaver Creek monitored stream characteristics (quantity and quality) above and below the mine. As part of the North Rilda extension of the Deer Creek Mine, PacifiCorp incorporated these two points within the surface hydrologic monitoring plan in 1996 (refer to Volume 9 and Annual Hydrologic Reports for unit hydrographs of Mill Fork Canyon). At the request of the Forest Service, an additional surface monitoring point (MFU03) was incorporated into PacifiCorp's hydrologic monitoring program during 2002. Surface monitoring point MFU03 is located in Section 17, Township 16 South, Range 6 East, above the projected intersection of the Mill Fork Graben with Mill Fork Creek (refer to hydrologic map MFS1851D).

*(c) Right Fork of Rilda Canyon*

Right Fork of Rilda Canyon is an intermittent stream located on the southeastern boundary of the Mill Fork ~~permit~~ Area (Refer to Hydrologic Map MFS1830D). The drainage area encompasses

approximately 5460 acres of which 810 are within the ~~permit~~ right-of-entry area. Numerous springs are located in the headwaters of the Right Fork in Sections 14, 23 and 24. Based upon field observations, flow exists in upper reaches during base flow conditions from the headwaters in Section 14 to the confluence to the two forks in Section 29. PacifiCorp has maintained an extensive network of surface and groundwater resources of Rilda Canyon since 1989, including a flume located in the Right Fork of Rilda Canyon in Section 29 (refer to Volume 9 Hydrologic Section and Annual Hydrologic Reports for unit hydrographs of Rilda Canyon).

*(2) Cottonwood Creek Drainage System*

*(a) Un-Named Tributaries to Indian Creek*

The un-named tributaries of Indian Creek which drain the western slope of East Mountain are ephemeral. Indian Creek itself is located approximately one half (½) mile to the west of the ~~permit~~ UTU-84285 boundary. As stated in the Mill Fork EA and confirmed with field observations, Indian Creek is perennial from the southeastern quarter of Section 34, Township 15 South, Range 6 East, approximately one mile north of the ~~permit~~ lease boundary. Most of the flow originates from the canyons on East Mountain as either surface flow or from springs at the base of the colluvial/alluvial toe in the valley floor. Additional contribution comes from a series of large springs located on the east side of Bald Mountain located within the Joes Valley graben. Indian Creek progressively gains flow from headwaters to below the ~~Mill Fork State Lease~~ lease boundary due to the contribution of groundwater. A portion of Indian Creek is diverted at a structure located in Section 15, and flows in a ditch roughly parallel to Indian Creek along the western base of East Mountain. Flow records collected by the Forest Service from 1972 to 1975 ranged between 1 to 30 cfs. Seven relatively small ephemeral drainages flow from the western slope of East Mountain within the ~~permit~~ lease areas. (Refer to Hydrologic Map MFS1830D). The total drainage area ~~within the permit area~~ encompasses approximately 2,047 acres.

*b. Water Quality and Quantity*

PacifiCorp maintains an extensive surface monitoring program to evaluate both quantity and quality of the two major drainage systems which incorporate the ~~permit~~ Mill Fork Area. The following will be divided by major drainage systems.

*(1). Huntington Creek Drainage System*

*(a) Huntington Creek*

Huntington Creek is comprised of many smaller tributary systems that feed the main stream. Crandall Creek, Mill Fork Creek, and Right Fork of Rilda Canyon, are the only tributaries to Huntington Creek that emanate from within the Mill Fork ~~permit~~ Area.

Huntington Creek flow data are recorded on a continuous basis by ~~Utah Power~~ PacifiCorp Energy at two locations; one station is located near the Huntington Power Plant, the other below Electric Lake which is about twenty-two miles upstream from the Huntington Plant. Flow records are maintained by ~~Utah Power~~ PacifiCorp Energy in order to determine water entitlements and reservoir storage allocation for the various users on the river.

The ~~Utah Power~~ PacifiCorp Energy station near the Huntington plant was established in the fall of 1973. Prior flow records were obtained from the USGS station located about one mile downstream from ~~Utah Power's~~ PacifiCorp Energy's existing station. The USGS station was established in 1909 and discontinued in 1970 after determination of available water supply for the Electric Lake Dam. The dam was completed in December 1973, and water storage commenced shortly afterward.

The calculated natural flow rates, which consider actual flow recorded at the plant, plant diversions, Electric Lake storage, and lake evaporation along with yearly comparisons, are reported annually in the Hydrologic Monitoring Report.

In addition to the sites monitored by Huntington Plant Environmental ~~Service~~ staff (refer to Volume 9 Hydrologic Section), three sites were added on Huntington Creek near the Deer Creek confluence in conjunction with the Deer Creek discharge permit (refer to Volume 9).

Specific water quality data as well as yearly comparisons are reported annually in the Hydrologic Monitoring Report. This practice will continue throughout the life of the permit. In general, the water shows a gradual increase in concentration of dissolved minerals as the flow proceeds down Huntington Canyon. The values at the station below Electric Lake do not

express the actual natural drainage water quality characteristics because of the lake effect, but it appears that the surface flow in Huntington Canyon is of very high quality in the upper reaches with some natural degradation occurring as the flow proceeds to the canyon mouth. Predominant dissolved chemical constituents in surface waters area calcium, magnesium and bicarbonate. Sediment yields in the Upper Huntington Canyon drainage were estimated at 0.1 ace-feet per square mile by Wadell, et. al, 1981.

*(b) Crandall Creek*

As stated earlier, only a small portion of the ~~permit~~ right-of-entry area is within the Crandall Canyon drainage area, and stream characteristics are extensively monitored by Genwal Resources. To reduce redundant information, monitoring of Crandall Creek will not be included as part of the Mill Fork permit application unless Genwal Resources terminates monitoring.

Water quality samples taken below the confluence of the north and south forks of Crandall Canyon Creek have a mean TDS of about 300 mg/l and are of the $Ca^{2+}$-$Mg^{2+}$-$HCO_3^-$ type with lesser amounts of $SO_4^{2-}$ (Appendix B Table 2). This water includes drainage from the Mill Fork ~~permit~~ Area as well as the area to the north.

*(c) Mill Fork Canyon Creek*

Mill Fork Canyon Creek is a tributary of Huntington Creek and was included in PacifiCorp's monitoring program starting in 1997. Monitoring of Mill Fork will be conducted according to the following schedule (see Hydrologic Monitoring Schedule in Volume 9 Hydrologic Section).

a.) Locations:

(1) Above old mines – MFA01
(2) Mill Fork Canyon Culvert – MFB02
(3) Above projected Mill Fork Graben crossing - MFU03 (refer to Hydologic Monitoring Map MFS1851D).

b.) Flow information is collected during the first or second week of each month.

c.) Water samples will be collected and analyzed quarterly (one sample at low flow and high flow) during the first or second week of the quarter. Parameters analyzed are those listed in the DOGM Guidelines for

Surface Water Operational Quality. The program was initiated in 1997, except for MFU03 which was added in 2002. Field measurements, including pH, specific conductivity, and temperature will be performed quarterly in conjunction with quantity measurements. Data regarding flow in Mill Fork Canyon Creek is presented in the annual Hydrologic Monitoring Report.

As stated above, flow information is collected monthly throughout the year. Hydrographs comparing annual flows are reported in the annual Hydrologic Monitoring Report.

Historical monitoring data collected by ARCo's Beaver Creek Coal Company - #4 Mine and the United States Geological Survey (site No. 76 Open File Report 81-539) has been incorporated in PacifiCorp's hydrologic database. Operational water quality monitoring was conducted during 1997 and 1998 (refer to Quarterly Hydrologic submittals). Baseline quality analysis was conducted from November 1998 through the fourth quarter 2000 (refer to respective Annual Hydrologic reports and Appendix C: Water Quality tab). Thereafter, baseline analysis will be repeated once every five- (5) years.

Water quality samples taken below the confluence of the north and south forks of Mill Fork Creek have a mean TDS of about 480 mg/l and are of the $Ca^{2+}$-$Mg^{2+}$-$HCO_3^-$ type with lesser amounts of $SO_4^{2-}$ (Appendix B Table 2). Most of this water originates in the Mill Fork ~~permit~~ Area .

*(d) Rilda Canyon Creek*

Rilda Canyon Creek is a tributary of Huntington Creek and is monitored according to the following schedule (see Hydrologic Monitoring Schedule included herein).

a.) Locations:

(1) Right Fork of Rilda - RCF1*
(2) Left Fork of Rilda - RCLF1 (Field data only)
(3) Left Fork of Rilda - RCLF2 (Field data only)
(4) Rilda Canyon - RCF2 (Field data only)
(5) Rilda Canyon - RCF3
(6) Rilda Canyon - RCW4 (refer to Volume 9 Map HM1).

*During mining of the North Rilda Leases, an additional site has been added upstream of RCF1 (adjacent to drill hole EM-163) to monitor surface/groundwater flow relationships. Flow will be measured yearly during base flow conditions.

b.) Flow information is collected during the first or second week of each month.

c.) Water samples will be collected and analyzed quarterly (one sample at low flow and high flow) during the first or second week of the quarter. Parameters analyzed are those listed in the DOGM Guidelines for Surface Water Operational Quality. The program was initiated in June 1989. Field measurements, including pH, specific conductivity, temperature, and dissolved oxygen, will be performed at the perennial stream locations, i.e., RCF3 and RCW4, monthly in conjunction with quantity measurements. Data regarding flow in Rilda Canyon Creek is presented in the annual Hydrologic Monitoring Report.

As stated above, flow information is collected monthly throughout the year with the use of three Parshall flumes and one V-notch weir (refer to Volume 9 Map HM1). Hydrographs comparing yearly flows are reported in the annual Hydrologic Monitoring Report and also as Figure HF33 in Volume 9 Hydrologic Section.

In accordance with the Hydrologic Monitoring Plan baseline quality analysis was conducted for a two year period; 1989-90, (refer to the respective Annual Hydrologic reports). Baseline analysis will be repeated once every five (5) years. Quality sampling was initiated in 1989; results of the samples collected are presented in Volume 9 Table HT7 and in the Annual Hydrologic Monitoring Reports.

Water quality samples taken below the confluence of the north and south forks of Rilda Creek have a mean TDS of about 400 mg/l and are of the $Ca^{2+}$-$Mg^{2+}$-$HCO_3^-$ type (Appendix B Table 2). This water is mostly drainage from the Mill Fork ~~permit~~ Area. Water quality of Rilda Canyon deteriorates slightly from the upper reaches to the confluence with Huntington Canyon.

*(2) Cottonwood Creek Drainage System*

The western portion of East Mountain is intersected by Cottonwood Creek and its associated tributaries, including Cottonwood Canyon

Creek and Indian Creek. The Cottonwood Creek drainage is about equal in size to the Huntington drainage, with total discharge from each drainage about 70,000 acre feet per year. The major cultural feature on Cottonwood Creek is the Joes Valley Reservoir, located about twelve miles west of the town of Orangeville. The 63,000 acre foot reservoir was constructed by the U.S. Bureau of Reclamation and provides storage water for irrigation, industrial, and municipal needs in the Emery County area.

*(a) Cottonwood Canyon Creek*

An extensive baseline study conducted on Cottonwood Canyon Creek to determine water characteristics prior to mining at the proposed Cottonwood Mine began in 1979. A property acquisition in 1981 resulted in mine plan changes; therefore, the baseline study was terminated as of January 1, 1984. As agreed upon with DOGM, PacifiCorp will continue to monitor the flow and water quality field measurements at the USGS flume location on monthly basis (see Volume 9 Figure HF34).

The Cottonwood Canyon located south of the Mill Fork ~~permit~~ Area is a major drainage system where evidence of glaciation exists. From the headwaters to Section 24, Township 17 South, Range 6 East, the canyon is characterized by U-shaped valleys with associated lateral and terminal moraine deposits. Lateral moraine deposits most commonly occur at the intersection with side canyons. Terminal moraine deposits occur at the northwest corner of Section 24 and from this point to near the confluence with Straight Canyon the canyon can be characterized as a V-shaped valley with little evidence of glaciation. For a complete discussion on Cottonwood Canyon Creek drainage refer to Volume 9.

*(b) Indian Creek*

Indian Creek is a tributary of ~~Lowery~~ Lowry Water located in upper Joes Valley. Four permanent runoff sampling sites were established in 2000 and are sampled as listed below (see Hydrologic Monitoring Schedule included herein).

a.) Locations:

(1) Indian Creek Above - ICA
(2) Indian Creek Flume - ICF (Installed by Genwal Resources)
(3) Indian Creek Below - ICB

(4) Indian Creek Ditch - ICD (refer to Hydrologic Map MFS1851D)

b.) Flow information will be collected during base flow conditions at ICA, ICF, ICB and ICD.

c.) Water samples will be collected and analyzed during base flow sampling. Parameters analyzed are those listed in the DOGM Guidelines for Surface Water Operational Quality. Field measurements, including pH, specific conductivity, dissolved oxygen and temperature, will be performed in conjunction with quantity measurements.

As stated above, flow information will be collected during base flow conditions with the use of Parshall flume and a portable v-notch weir (see Hydrologic Map MFS1851D for locations). Hydrographs comparing yearly base flows will be shown in the Hydrologic Monitoring Reports.

Historical flow monitoring data collected by Genwal Resources at Indian Creek Flume (ICF) has been incorporated in PacifiCorp's hydrologic database and is included in Appendix C: Water Quality tab). In accordance with the hydrologic monitoring guidelines, baseline quality analysis was conducted for a two year period (2000 and 2001). Information from the baseline sampling is included in Appendix C: Water Quality tab. After the initial baseline period, additional baseline analysis will be repeated once every five (5) years.

Quality of Indian Creek is similar to the data collected in the Huntington Drainage. Quality remains relatively constant throughout the upper Joes Valley area. Indian Creek has mean TDS of about 270 mg/l and are $Ca^{2+}$-$Mg^{2+}$-$HCO_3^-$ type with lesser amounts of $SO_4^{2-}$ (refer to Appendix C: Water Quality tab and Table MFHT-5). Water quality of Indian Creek Ditch (ICD) is influenced by groundwater discharge from a series of springs throughout the length of the ditch and is slightly higher in TDS (average of about 410 mg/l) than Indian Creek.

## 2. Soil Loss - Sediment Yield

Sediment load concentrations in the area of the ~~permit~~ mine leases vary dramatically depending on the percentage of disturbed areas, ruggedness of the terrain, geologic formations present, the amount of precipitation the area receives, and stream flow volume.

| Stream | Site No. | Date | Suspended Sediment Concentration (mg/L) | Suspended Sediment Load (tons per day) |
|---|---|---|---|---|
| Huntington Creek (gaging station 09318000) | 88 | 8-13-78 | 104 | 27 |
| | | 11-17-78 | 72 | 2.5 |
| | | 6-13-79 | 114 | 66 |
| | | 8-7-79 | 44 | 15 |
| Crandall Canyon (gaging station 09317919) | 51 | 8-12-78 | 49 | 0.14 |
| | | 11-18-78 | 60 | 0.08 |
| | | 6-14-79 | 15 | 0.41 |
| | | 8-6-79 | 56 | 0.15 |
| Tie Fork Canyon (gaging station 09317920 | 67 | 8-13-78 | 12 | 0.03 |
| | | 11-18-78 | 57 | 0.12 |
| | | 6-14-79 | 38 | 0.68 |
| | | 8-6-79 | 66 | 0.17 |
| Bear Creek | 81 | 10-25-78 | 8,860 | 1.90 |
| Deer Creek | 87 | 6-14-79 | 609 | 3.10 |
| Cottonwood (gaging station 0932400) | 104 | 8-15-78 | 5 | 0.003 |
| | | 11-19-78 | 130 | 0.2 |
| | | 8-5-79 | 63 | 0.09 |

As part of the U.S. Geological Survey water monitoring program in Utah coal fields (Open File Report #81359), fourteen water samples associated with the ~~permit~~ Mill Fork and Deer Creek mining areas were collected between August 1978 and September 1979 at gaging station 09318000 on Huntington Creek to determine suspended-sediment concentrations and loads. Three samples each were collected at gaging stations 09317919, 09317920, and 09324200 in Crandall and Tie Fork canyons and on Cottonwood Creek. Five additional samples were collected by project personnel from these and other streams in the study area. Representative suspended-sediment concentrations and loads of streams in the study area are listed below.

As indicated from the samples collected by the USGS, the suspended-sediment concentrations varied widely among the drainages analyzed. The relatively low concentrations of suspended sediment were attributed to well established channels, low flow periods, and a scarcity of roads. Higher concentrations appeared to be associated with the activities of man and erosion of large exposures of the Mancos Shale formation in the lower reaches of the drainages. Sediment concentrations generally increased with increased stream discharge. Note that the highest values at all of the locations occurred during the spring runoff period, but not enough data were available to compute daily sediment discharge.

PacifiCorp has collected samples on a quarterly basis from the streams within and adjacent to the ~~permit~~ Mill Fork Area. Samples taken at periods of both high and low flow have been tested for total suspended solids (TSS) to identify stream stability and are reported annually in the Hydrologic Monitoring Report.

Runoff from disturbed areas is diverted through sediment control facilities or protected from abnormal erosion. Each sediment control facility is sized according to calculated annual sediment accumulations (see Operational section of the individual permit applications for specific information on sediment yields from disturbed areas). Water discharged from the sediment pond facilities is monitored according to the stipulations set forth in the UPDES permits (refer Volume 9 Hydrologic Section Appendix B).

## R645-301-723. SAMPLING AND ANALYSIS

Water quality sampling and analysis of samples collected by PacifiCorp will be done according to the "Standard Methods for the Examination of Water and Wastewater." Refer to Volume 9 Hydrologic Section Appendix A for sample documentation and analytical methods and detection limits.

## R645-301-724. BASELINE INFORMATION

PacifiCorp maintains an extensive groundwater and surface monitoring program to characterize premining and any mining related impacts both to quality and quantity. As an integral part of the permit application, an annual Hydrologic Monitoring Report is prepared by PacifiCorp and submitted to appropriate government agencies. Baseline information for the East Mountain property will be divided into the following categories: 1) Groundwater and 2) Surface Water.

### 1. Groundwater

The characteristics of the groundwater resource are dependent upon the geology of the water-bearing strata and on the geology and hydrology of the recharge area. Groundwater movement and storage characteristics are dependent on the characteristics of the substratum. To characterize the baseline quality and to document the existence of seasonal variations, PacifiCorp developed a groundwater monitoring program which includes sampling both surface springs and in-mine groundwater sources. The program was initiated during a period from 1977 through 1979 for majority of East Mountain and during the year 2000 for the Mill Fork area. Routine monitoring continues to support the quality data collected during the initial phase. In general, data from the springs and in-mine sources are representative of the groundwater quality in the geologic strata from which the groundwater sources issue. Cation-anion diagrams have been utilized to depict

the groundwater characteristics and to monitor quality trends (refer to Appendix C: Water Quality tab for cation-anion diagrams for the Mill Fork Area). Results of the data collected have shown that in both the surface springs and in-mine groundwater sources variations in quality from individual sources do exist, but the quality from the individual sources remains consistent with time. Spring water is mostly calcium-bicarbonate with some magnesium and sulfate. As discussed in the General Requirement Section - R645-301-711, quality decreases with increasing downward vertical movement and from north to south with sulfate becoming a major constituent. Cation-anion diagrams have been included in the Annual Hydrologic Reports to support the lack of seasonal variation.

## 2. Surface Water

The Mill Fork ~~permit~~ Area is drained by four major drainage systems: Crandall Canyon Creek, Mill Fork Creek, Right Fork of Rilda Canyon, ~~and~~ a series of un-named drainages in Joes Valley. PacifiCorp and Genwal Resources along with government agencies have documented that all of the streams emanating from within the ~~permit~~ lease area with the exception of Crandall Creek and the lower portion of Rilda Canyon cease flowing in the fall or winter, suggesting that they are not perennial but ephemeral. Flow in the drainage is a combination of snow melt and springs. Most of the runoff occurs during the months of April through July. Even though the drainage systems are ephemeral, except for Crandall Canyon and the lower portion of Rilda Canyon, variations in quality do exist. Total dissolved solids increase gradually in concentration as flow proceeds from the upper plateau areas to the confluence of the major drainages of Huntington and Cottonwood Canyons. Surface waters in the mine ~~permit~~ area are predominantly bicarbonate, calcium, and magnesium in the upper reaches with sulfate becoming a major constituent in the lower reaches. The increase in sulfate concentration is due to the influence of the Mancos Shale, a marine shale, which outcrops in the lower reach of each of the drainage systems. Seasonal total suspended solids variations also occur with the highest concentrations occurring during the initial runoff period.

### R645-301-724.100. GROUNDWATER INFORMATION

A detailed description of the ownership of existing wells, springs, and other groundwater resources, including seasonal quality and quantity of groundwater and usage, is given in sections R645-301-721 and 722.

### R645-301-724.200. SURFACE WATER INFORMATION

A detailed description of all surface water bodies, i.e., streams and lakes, including quality, quantity, and usage is given in section R645-301-722.

## R645-301-724.300. GEOLOGIC INFORMATION

Applicable geologic information can be referenced in the Geologic Section of this Volume.

## R645-301-724.400. CLIMATOLOGICAL INFORMATION

PacifiCorp operates a network of weather stations, including two at low elevations (Hunter and Huntington power plants) and two at high elevations (Electric Lake and East Mountain).

### A. PRECIPITATION

The climate of the ~~permit~~ area has been described by the U.S. Geological Survey, which states that it is semi-arid to sub-humid and that precipitation generally increases with altitude. The average annual precipitation ranges from about ten (10) inches in the lowest parts of the ~~permit~~ mine plan area (southeast) to more than twenty-five (25) inches in the highest parts (northwest). PacifiCorp's weather station, located in Section 26, Township 17 South, Range 7 East, has provided data which shows that the summer precipitation in the form of thundershowers averages about the same as the winter precipitation in the form of snowfall. Because much of the summer precipitation runs off without infiltration, the winter precipitation has the greatest impact on groundwater.

Precipitation amounts have been and will continue to be recorded at the Hunter and Huntington power plants, at Electric Lake Dam, and on East Mountain. Precipitation data can be found in the annual Hydrologic Monitoring Report.

### B. TEMPERATURES

Air temperatures vary considerably both diurnally and annually throughout the ~~permit~~ Mill Fork Area. Midsummer daytime temperatures in lower areas commonly exceed 100$^{o}$ F, and midwinter nighttime temperatures throughout the area commonly are well below 0$^{o}$ F. The summer temperatures are accompanied by large evaporation rates. Although not recorded, there probably also is significant sublimation of the winter snowpack, particularly in the higher plateaus which are unprotected from dry winds common to the region. Temperature information is collected at the PacifiCorp weather stations at each power plant, at Electric Lake, and on East Mountain. These data will continue to be included in the annual Hydrologic Monitoring Report.

### C. WINDS

The winds in the area are generally variable. The wind rose presented in Volume 9 Figure HF36 displays the variability for the Meetinghouse Ridge area for January to December 1978.

## R645-301-724.600. SURVEY OF RENEWABLE RESOURCES LANDS

Information describing the existing groundwater resources, including descriptions of ~~permit~~ local area aquifers and areas of recharge can be found in section R645-301-721. Impacts related to mine subsidence can be found in section R645-301-728.

## R645-301-724.700. ALLUVIAL VALLEY FLOORS

Utah Regulations require that the presence of alluvial valley floors in or adjacent to the mine project area be identified. The regulations define an alluvial valley floor as "unconsolidated stream-laid deposits holding streams with water availability sufficient for sub-irrigation or flood irrigation agricultural activities but does not include upland areas which are generally overlain by a thin veneer of colluvial deposits composed chiefly of debris from sheet erosion, deposits formed by unconcentrated runoff or slope wash together with talus, or other mass movement accumulations, and windblown deposits." The alluvial valley floor is therefore determined to exist if:

1. Unconsolidated stream-laid deposits holding streams are present, and
2. There is sufficient water to support agricultural activities as evidenced by:
    a. The existence of flood irrigation in the area in question or its historical use;
    b. The capability of an area to be flood irrigated, based on streamflow, water yield, soils, water quality, topography, and regional practices; or
    c. Subirrigation of the lands in question, derived from the groundwater system of the valley floor.

### A. SCOPE

The purpose of this section of the report is to examine the potential existence of alluvial valley floors in and adjacent to the areas to be affected by surface operations associated with the permit areas. It is divided into three parts. First, a general description of the surface operations and site disturbances associated with the permit areas is presented. Next, discussions of the characteristics of geomorphology and irrigation are presented. Finally, the conclusions of the alluvial valley floor determination are summarized.

### B. SITE DESCRIPTION

Surface facilities associated with the permit area will consist of the portal area and associated facilities: for Deer Creek Mine - Deer Creek and Rilda canyons.

The climate of the general area is semi-arid to arid and continental. Daily minimum temperatures recorded at the East Mountain weather station in winter range from the average low of -6.3$^{o}$ F to

the maximum record low of -15.2º F, and daily maximum temperatures in summer range from the average high of 84.7º F to the maximum record high of 89.3º F.

Temperatures in the region tend to be inversely related to elevation. Average annual precipitation recorded for a 20 year period (1981-00) at the East Mountain weather station averaged 13.59 inches. Approximately fifty percent of the annual precipitation falls during the winter as snow with most of the remainder coming as summer thunderstorms.

## C. ALLUVIAL VALLEY FLOOR CHARACTERISTICS

In this section of the report the various criteria for determining the existence of an alluvial valley floor are examined in relation to the overall ~~permit~~ mine plan and adjacent areas.

## D. GEOMORPHIC CRITERIA

Alluvial deposits in and adjacent to the mine ~~permit~~ plan area have been mapped and reported in Doelling's "Wasatch Plateau Coal Fields, 1972." The report indicated that alluvia in the area are found solely along Huntington Creek below the Rilda Canyon confluence in the Huntington drainage system, in the Cottonwood drainage system along lower Cottonwood Creek and at the mouth of the North Fork of Cottonwood Creek, and in the Joes Valley drainage.

## E. FLOOD IRRIGATION

Flood irrigation near the ~~permit~~ mine plan area is currently (and has historically been) confined to the alluvial areas of Huntington Creek approximately one mile below the confluence of Deer Creek and Huntington Creek. In the Cottonwood drainage system flood irrigation is currently, and historically, confined to the alluvial areas of lower Cottonwood Creek. No flood irrigation has historically been practiced on the narrow alluvium land upstream in the canyons opening to lower Cottonwood and Huntington Canyon creeks. The historic lack of flood irrigation in these steep, narrow canyons suggests that such activities are not feasible in the region. In addition, the topography is very steep and consequently not conducive to agricultural activities.

Water quality of Cottonwood and Huntington creeks is good. A detailed review of the surface water quality has been presented previously in this report and is updated each year in the annual Hydrologic Monitoring Report.

## F. SUB-IRRIGATION

Some sub-irrigation of vegetation does occur on the alluvial valley floors. The sub-irrigated species (mainly cottonwoods and willows) are found along the channels of Cottonwood Creek and in the Joes Valley drainage above the reservoir and along the channels of Rilda Canyon and

Huntington Creek. This suggests that sub-irrigation is confined to the channel areas where the water table is near the surface.

### G. ALLUVIAL VALLEY FLOOR IDENTIFICATION

Based on the foregoing analysis, the narrow canyons associated with the ~~permit~~ mine plan area cannot be considered to have an alluvial valley floor due to insufficient alluvium and the very limited area for supporting an agriculturally useful crop. The valley floor of Huntington Creek below the confluence with Deer Creek, however, can be classified as an alluvial valley floor due to the presence of both flood irrigation and limited sub-irrigation on the alluvium.

### H. POTENTIAL IMPACTS OF ALLUVIAL VALLEY FLOORS

Very little potential exists for the mine operations to impact the Cottonwood and Huntington Creek alluvial valley floor due to the location of the operations in comparison to the alluvial deposits. All surface disturbances in the portal area will be protected by sediment control facilities and have been designed and constructed according to R645 standards in an environmentally sound manner.

The hydrologic monitoring program will help determine the actual impact of surface activities and aid in selecting mitigating measures, if necessary; however, it is believed that the overall ~~permit~~ mine plan area and associated activities will have no significant hydrologic impacts on the alluvial valley floor along Cottonwood and Huntington creeks. Details concerning the monitoring program are outlined in section R645-301-731.

## R645-301-725. BASELINE CUMULATIVE IMPACT AREA INFORMATION

Hydrologic and geologic data required assessing the probable cumulative impacts of the coal mining and reclamation activities are presented in the Hydrologic (including the Annual Hydrologic Reports), Operational, and Reclamation sections of the Deer Creek permit application.

## R645-301-728. PROBABLE HYDROLOGIC CONSEQUENCES (PHC) DETERMINATION

Probable hydrologic consequence determinations are based on extensive investigations conducted to determine existing groundwater and surface water resources along with ongoing hydrologic research and comprehensive monitoring programs including hydrologic and subsidence. Data utilized to arrive at the conclusions presented in this section were discussed earlier (see Section R645-301-721), and specific information pertaining to impacts to the hydrologic balance will be discussed under the appropriate section.

## A. DESCRIPTION OF THE MINING OPERATION

The PacifiCorp mine ~~permit areas~~ operations are located in the central portion of the Wasatch Plateau Coal Field in Emery County, Utah. Generally, this area is a flat-topped mesa surrounded by heavily vegetated slopes which extend to precipitous cliffs leading to the valley below. Much data has been collected regarding the geology and the hydrology of the East Mountain property including the Mill Fork ~~permit~~ Area. In all, approximately ~~150~~ 232 drill holes have been completed from the surface, over 500 from within the mines; and a comprehensive hydrologic data collection program is ongoing, all of which have provided data used in this PHC. The most applicable data have been included in this document. For a review of additional data it is suggested that the reader refer to the annual Hydrologic Monitoring Report.

## B. GEOLOGY

A detailed description of the geology (structure and stratigraphy) has been presented in a previous section and will not be duplicated here. (Refer to R645-301-600 Geologic Section of this Volume).

## C. MINING METHODS

Mining of the Mill Fork Area was ~~be~~ conducted entirely by underground mining methods consisting of continuous miner and longwall techniques. Production from the Mill Fork Area ceased on January 7, 2015. Two mineable coal seams existed within the property. In ascending order they are the Hiawatha and Blind Canyon (refer to the Engineering Section). Inter-burden between the two seams ranges from approximately eighty (80) to one hundred twenty (120) feet. Based on the proposed mine plan, there ~~will be~~ were areas in each seam where one seam ~~will be~~ was mined, and an isolated area mainly within UTU-88554 where both seams ~~will be~~ were extracted. Thin coal ~~prohibits~~ prohibited mining in the southwestern portion of Sections 22 and 23 (T. 16 S., R 6 E.), and eastern half of Section 13 (T. 16 S., R 6 E.) and 18 (T. 16 S., R 7 E.). Multiple-seam mining ~~is projected to occur~~ has occurred in Sections 11, 12, 13 and 14 (T. 16 S., R 6 E.).

The chemical and physical properties of the overburden have been identified and described in the Geologic section of the permit application.

Because mining was ~~is~~ limited to underground mining techniques, only minor amounts of overburden directly in contact with the seam, either roof or floor, were ~~will be~~ removed during mining operations.

## D. SURFACE WATER SYSTEM

A detailed description of the regional and ~~permit~~ mine plan area surface water resources have been presented in previous sections and will not be duplicated here. (Refer to R645-301-722). In general, the surface drainage system on East Mountain is divided into two major drainages; the southwest portion forms part of the Cottonwood Creek drainage, and the northeast portion contributes to the Huntington Creek drainage. The Huntington Creek drainage covers seventy percent (70%) of the East Mountain leases held by PacifiCorp. Both of these perennial streams are located adjacent to but not within the ~~permit~~ lease boundaries. PacifiCorp has observed that all of the streams emanating from within the Mill Fork ~~permit~~ boundary, with the exception of Crandall Canyon Creek, are either intermittent or ephemeral. Most of the streams are spring fed. PacifiCorp has monitored all of the surface waters since 1979 (except for Rilda Canyon, Mill Fork Canyon and Indian Creek, 1989, 1997 and 2000 respectfully) and will continue to monitor them in the future. The data collected is included in each annual Hydrologic Monitoring Report.

Impacts to surface water due to the underground operations of Deer Creek are minor, both in terms of quality and quantity. Due to the type of mining and relatively small areas of surface disturbance, surface water impacts are limited. Through the use of sedimentation ponds and the diversion of runoff from undisturbed areas around the surface facilities, impacts to surface waters are negligible. (See Volume 9 Appendix B for UPDES permit information.) One impact associated with the Deer Creek operations is mine dewatering. A detailed analysis of the associated impacts is described in the Hydrologic Balance section below.

## E. HYDROLOGIC BALANCE - SURFACE WATER SYSTEM

As mentioned previously in this report, the major drainages conveying runoff away from the mine ~~permit~~ areas are streams in Crandall, Mill Fork, Rilda Canyons and un-named drainages in Joes Valley. With the exception of the very headwater regions of these drainage basins, mining and, therefore, subsidence will not occur beneath the major stream channels of these canyons. In the majority of cases, cracking due to subsidence is not anticipated to extend to the surface; therefore, surface runoff patterns will not be significantly affected. Data collected by PacifiCorp over a ~~twenty~~ thirty (~~2~~30) year period concerning subsidence and surface drainages has not detected any surface stream impacts. Consequently, subsidence should not cause significant impacts to the surface water system. Surface facilities are located in the following canyons:

| | |
|---|---|
| Deer Creek Mine: | Deer Creek Canyon |
| | Rilda Canyon |

Natural tributary flows are diverted around surface facilities. Surface runoff from disturbed areas is detained in sedimentation ponds prior to release. All discharge from the sedimentation ponds is sampled in accordance with the stipulations in the UPDES permits (see Volume 9 Appendix B).

Underground coal mines in the Wasatch Plateau Coal Field typically intersect groundwater from strata surrounding the coal seam. Mines operated by PacifiCorp~~;~~ including Deer Creek, Wilberg/Cottonwood, and Trail Mountain mines have intersected quantities of water in excess of operational needs and therefore have discharged intercepted groundwater. Dewatering of Deer Creek, Wilberg/Cottonwood and Trail Mountain has had only a minor impact on surface quality and quantity on a regional basis; however, on a site specific basis the flow in Deer Creek and Grimes Wash has increased from premining conditions. During periods of high runoff changes in quality are insignificant; however, in low flow conditions some degradation is likely due to the fact that the mine discharge waters are higher in TDS than the surface waters. ~~It~~ The degradation is difficult to assess ~~the degradation~~ because it is not known from where or how much of the water discharged from the mine would naturally have been discharged into the receiving streams by natural groundwater flow. It is anticipated that mining in the Mill Fork ~~permit~~ Area will intercept groundwater similar adjacent operations (Deer Creek and Genwal Resources). The section below will describe the dewatering of Deer Creek and related surface impacts.

*Deer Creek Mine*

Excess water not utilized in the mining operation or for domestic use is either pumped to storage areas or discharged from the mine. (Quality and quantity is reported in the Annual Hydrologic Report.) The locations of the sump areas within the mine are shown in the Annual Hydrologic Report.

Inline flow meters are utilized to record the amount of water discharged from the mine, after which it passes through underground sedimentation sumps. Prior to December 1990 all of the water discharged from Deer Creek was piped directly to PacifiCorp's Huntington Power Plant. As of November 16, 1990, the State of Utah-Department of Health granted PacifiCorp a temporary discharge permit under a bypass agreement. On June 1, 1994, Department of Health granted PacifiCorp a site specific permit which included discharge from the Deer Creek Mine. Excess water not utilized in the mining operation or for domestic use is either pumped to storage areas or discharged to the Huntington Plant or Deer Creek drainage in accordance with stipulations of UPDES Permit Number UT0023604-02 (refer Volume 9 Appendix B for UPDES permit information).

## F. MITIGATION AND CONTROL PLANS

Runoff from disturbed areas is diverted through sediment control facilities or protected from abnormal erosion. Any mine discharge will be routed through the underground sediment pond and reservoir in the old workings or specialized sump areas and will be monitored in accordance with UPDES permit standards and state and federal regulations. (See Appendix B for UPDES

permit information.)

The effects of the mining operation on the surface water system will be analyzed through the surface water monitoring plan described below. In the event that monitoring shows that the surface water system is being adversely affected by mining activities, additional steps will be taken to rectify said impacts in cooperation with local, state, and federal regulatory agencies.

## G. SURFACE MONITORING PLAN

A hydrologic surface monitoring program, initiated in 1979 (except for Rilda Canyon, Mill Fork Canyon and Indian Creek, 1989, 1997 and 2000 respectfully), has been underway at each of the surface monitoring stations shown on Hydrologic Map MFS1830D. Stations were established to monitor water quality and quantity above and below the mine ~~permit~~ areas. The parameters for laboratory analyses are those established by DOGM in "Guidelines for Surface Water Quality" (see Appendix A). Once baseline data have been collected (two year period), the surface sites described in the hydrologic monitoring schedule in Volume 9 Appendix A will continue to be monitored quarterly (when accessible) throughout the operational phase of the mine. The quarterly monitoring during the mine operational phase will include flow and quality to delineate seasonal variation and assess changes in water quality.

Future data may show that modifications of the monitoring schedule are justified. Any changes to the monitoring schedule (frequency or parameters) will be made only with the approval of DOGM. Results of all water quality data will be submitted to that agency quarterly, with an annual summary.

Postmining monitoring of surface water will continue at representative stations determined with the aid and approval of DOGM. Representative surface water stations will be monitored biannually during high and low flow conditions. Monitoring will continue until the release of the reclamation bond or until an earlier date to be determined after appropriate consultation with local, state, and federal agencies.

## H. GROUNDWATER SYSTEM

Detailed descriptions of the regional and ~~permit~~ local area groundwater resources have been presented in previous sections and will not be duplicated here (refer to R645-301-722). In general, the majority of all natural groundwater discharge points located on the East Mountain property (including the Mill Fork ~~State Lease/UTU-84285~~ Area) are in the form of seeps and springs. PacifiCorp has mapped approximately one hundred ninety-eight (198) springs within and adjacent to the Mill Fork ~~permit~~ Area ranging in discharge from <1 gpm to as high as 145 gpm (see Spring Map MFS1831 and Appendix C).

PacifiCorp has collected an extensive database of information pertaining to the groundwater quality and quantities of the East Mountain region and adjacent areas. Included in the database is longterm quality and flow information both for springs and for groundwater intercepted by mining. In addition to the studies completed by PacifiCorp, Mayo & Associates was contracted in 1996 and 2000 to conduct comprehensive study to characterize the hydrology and hydrogeology of the East and Trail ~~m~~Mountains (refer to Volume 9 - Hydrologic Support Information No.11 and Appendix B of this section). The hydrogeology of the PacifiCorp leases were ~~elevated~~evaluated by analyzing: 1) solute and isotopic composition of surface and groundwaters, 2) surface and groundwater discharge data, 3) piezometric data, and 4) geologic information. The following is summary of the conclusion of this study (refer to Volume 9 Hydrologic Support Information No. 11 and Appendix B of this section for complete details):

**Conclusions from Mayo & Associates Hydrologic Investigation**

1. The $\delta^2$H and $\delta^{18}$O compositions demonstrate that all groundwaters are of meteoric origin (i.e. snow and rain).
2. Active and inactive groundwater regimes occur in the mine lease area.
3. The active regime includes alluvial groundwater, groundwater in the Flagstaff Formation, and all near surface exposures of the other bedrock formations except, perhaps, the Mancos Shale. The near surface extends about 500 to 1,000 feet into cliff faces. Groundwaters in the active regime contain abundant $^3$H and anthropogenic $^{14}$C.
4. Comparison of long-term discharge hydrographs with precipitation records demonstrates that active regime groundwaters: 1) are in direct hydraulic communication with the surface, 2) are recharged by modern precipitation, and 3) have large fluctuations in spring discharge rates which can be attributed to seasonal and climatic variability. High-flow/low-flow discharge rates vary as greatly as 600 gpm to nearly dry; however, most high flow rates are less than 50 gpm.
5. Despite the seasonal variability in discharge rates, the solute concentrations of active region groundwaters do not exhibit significant seasonal variability.
6. The inactive regime includes groundwater in sandstone channels in the North Horn, Price River, and Blackhawk Formations which are not in direct hydraulic communication with the surface (i.e. greater than about 500 to 1,000 feet from cliff faces). Mine workings are largely part of the inactive regime. The sandstone channels are vertically and horizontally isolated from each other and when encountered in mine workings are usually drained quickly. Coal seams are hydraulic barriers to groundwater flow. The blanket sands of the Star Point Sandstone are also largely in the inactive zone. Except where exposed near cliff faces, faults encountered in mine workings are part of the inactive regime. Except near cliff faces, faults are not conduits for vertical hydraulic communication between otherwise hydraulically isolated pockets of groundwater.
7. Inactive region groundwater systems contain old groundwater (i.e. 2,000 to 12,000

years), and are not influenced by annual recharge events or short term climatic variability.

8. In-mine inactive regime groundwaters occur in nearly stagnant, isolated zones which have extremely limited hydraulic communication with other inactive regime groundwaters in the vicinity of mine workings and with near-surface active regime groundwaters as evidenced by the following:

a) Groundwaters discharging into mine openings have $^{14}C$ ages ranging from 2,000 to 12,000 years

b) Roof drip rates rapidly decline when water is encountered in the mine indicating that the saturated zone above the coal seam is not hydraulically continuous and has a limited vertical and horizontal extent.

c) Unsaturated conditions have been identified in boreholes drilled vertically into sandstone channels located above coal seams.

9. The fact that inactive region groundwaters encountered in mine openings do not have an infinite age means that, at some time, there has been some hydraulic communication with the surface. This communication is extremely limited as illustrated by calculated steady state recharge-discharge rates of faults and sandstone channels in the inactive zone which range from 0.001 to 1.23 gpm.

10. Groundwater in the Star Point Sandstone is part of the inactive regime as evidenced by the 6,000 year $^{14}C$ age of the sample from well TM-3. In the down dip direction along the axis of the Straight Canyon Syncline, potentiometric pressures in the Spring Canyon member results in upwelling of groundwater into Hiawatha seam mine openings. Such upwelling may locally reduce the pressure in the Spring Canyon member.

11. Areally extensive groundwater regimes in the lower Blackhawk Formation and Star Point Sandstone do not exist within the lease area. Therefore, it is not meaningful to create piezometric surface maps of these systems.

12. Streamflow is dependent on snow melt, precipitation and thunderstorm activity. There is no apparent hydraulic communication between streamflow and groundwater encountered in mine openings.

13. The groundwater discharging into the Rilda Canyon alluvial collection system is of modern origin and is closely tied to seasonal recharge. This is evidenced by its modern radiocarbon and $^{3}H$ contents and by the discharge hydrographs. The alluvial groundwater is not related to the groundwater encountered in the mines.

14. The groundwater discharging in Cottonwood Canyon near Cottonwood Spring and Roans Spring discharges from glacial deposits and is of modern origin. The radiocarbon and $^{3}H$ contents of this water indicate a modern origin. The water in the shallow glacial deposits is not related to the groundwater encountered in the mines.

The USGS has conducted extensive studies to determine the regional groundwater system for the central Wasatch Plateau Coal Field. The studies indicate a regional aquifer exists in the coal-

bearing sequence of the Blackhawk and the underlying Star Point Sandstone formations. The studies have also concluded that several isolated or perched aquifers existed above the Blackhawk/Star Point Sandstone aquifer. PacifiCorp agrees with conclusions of the USGS studies concerning the perched aquifers above the coal-bearing sequence of the Blackhawk Formation but has some reservations about the significance of the Blackhawk/Star Point Sandstone aquifer which will be discussed below. The majority of the groundwater is discharged from the perched aquifers which occur along the base of the North Horn Formation in the form of seeps and springs (refer to ~~Spring~~ ~~Hydrologic~~ Map MFS183~~1~~0D). Several other perched aquifers exist mainly along the formational contacts with the North Horn Formation, including the upper contact with the Flagstaff Limestone and the lower contact with the Price River Formation.

The majority of the groundwater recharge on East Mountain comes from the winter snowpack which melts and infiltrates into the surface of East Mountain. The water flows down vertical fractures which intersect sandstone channel systems in the North Horn and Blackhawk formations. The majority of the groundwater reaching this point intersects the surface in springs located in the North Horn Formation. Very little recharge intersects the Price River Formation and Castlegate Sandstone sandstones; consequently, they are not water saturated where intersected in the numerous drill holes penetrating those units.

The hydrogeologic characteristics of the coal-bearing Blackhawk and overlying formations effectively limit the extent of impacts to the hydrologic system. Impacts to water quality are negligible and may be slightly beneficial. As discussed previously, two separate aquifers-water bearing zones occur on the East Mountain property: 1) perched aquifers associated mainly with the North Horn Formation, and 2) Blackhawk-Star Point Formation, which exhibits limited potential as a property wide, water saturated zone. The following hydrologic balance section will segregate the two zones and describe the significance and possible impacts to each zone.

## I. HYDROLOGIC BALANCE - GROUNDWATER

Mining within the Mill Fork ~~permit~~ Area will have negligible impact on the regional hydrologic balance, but there could be some possible local impact. This section discusses the possible mining-related impact on the hydrologic balance due to 1) subsidence - perched aquifer systems, 2) mining in the Rilda Canyon area - NEWU~~A~~SSD springs, 3) mining in the Mill Fork area - Little Bear Spring, and 4) interception of groundwater by mine workings.

### 1. Subsidence: Perched Aquifer Systems above the Mine Horizon

As discussed earlier, most of the groundwater in the ~~permit~~ mine plan area discharges in the form of seeps and springs. Springs issuing from the perched groundwater in the Flagstaff Limestone throughout the Blackhawk formations will only be impacted by mining activities if fracturing from subsidence reaches upward into these formations and is not sealed by swelling or fracture filling

from plastic mudstones. As discussed earlier, the majority of springs on the East Mountain property (including the Mill Fork area) are associated with the North Horn Formation. As discussed in the regional groundwater characteristics section, the North Horn Formation is comprised of a variety of rock types which range from highly calcareous sandstone to mudstone. Lenticular sandstone channels are often present in the upper and lower portion of the formation. Water which percolates down fractures from the overlying Flagstaff Limestone works its way into the sandstones, forming the perched water tables. The actual lateral extent, or correlation, between the perched water tables has not been identified; and it is not practical to do so because the tables are limited in extent and variable in stratigraphic location. Many springs have been identified where sandstone channels intersect the land surface. A Spring Geologic Conditions Inventory sheet has been completed for each spring inventoried on the East Mountain Property and can be found in Appendix C.

The lower two thirds (upper Cretaceous in age) of the formation is generally highly bentonitic mudstone which is impermeable. It is likely that this material is acting as an aquiclude, preventing adequate recharge from reaching the Price River Formation or Castlegate Sandstone Sandstone below. The mudstones present appear to swell when they come in contact with water; therefore, vertical migration of water along fractures through this material is limited because the fractures are sealed by the swelling clays. To identify and verify the existence of these bentonitic-plastic type mudstones, PacifiCorp conducted a special surface drilling program in 1989 to determine the rock strength and lithologic characteristics of the overburden on the East Mountain property. The entire sequence of the formations which are present on the East Mountain property, from the Flagstaff through the Star Point Sandstone Formation, was penetrated using two drill holes, identified as EM136C and EM137C. Drill hole EM136C penetrated the Flagstaff Limestone and the upper 200 feet of the North Horn Formation. Hole EM137C penetrated the lower portion of the North Horn Formation through the upper Star Point Sandstone Formation (refer to Volume 9 Hydrologic Support Information: No.8). Previous East Mountain surface exploration programs have experienced swelling and caving problems associated with plastic mudstone zones located in the upper and lower portions of the North Horn Formation. Regional as well as property wide drilling, along with limited accessible outcrop data, has shown that even though projecting the lateral extent of individual lithologic units is not practical, the basic lithologic characteristics of the North Horn Formation are consistent on regional and ~~permit~~ local area bases. Drilling of EM136C and 137C confirmed existence of soft, plastic type mudstones which form an aquiclude, preventing significant recharge to the lithologic units below the North Horn Formation. Field investigations have shown that even along major fault systems, i.e., Pleasant Valley and Roans Canyon, vertical migration is interrupted by the lithologic characteristics of the North Horn Formation, forming springs along the fault traces. Examples of springs of this type are shown on Volume 9 Table HT1 and Map HM4.

The depth of the aquifers in the North Horn Formation is variable due to the rugged topography.

The localized perched water tables may either intersect the surface of the ground or be covered by as much as 1,000 feet of overburden. They are located at least 1,400 feet above the coal seam to be mined. Communication of water between the perched aquifers in the North Horn Formation and the water flowing into the Deer Creek Mine is limited in quantity and occurs very slowly.

Studies conducted by PacifiCorp, along with independent governmental research have concluded that impacts to the perched aquifers have been negligible (refer to 1). Annual Hydrologic Monitoring Reports, 2). Supplemental Volume 1, Phase I, II, and III Lease Relinquishment Information for the Cottonwood/Wilberg Mine, C/015/019, Deer Creek Mine, C/015/018, and Des Bee Dove Mine C/015/017, Emery County, Utah, and 3). United States Department of Interior: Bureau of Mine Information Circular 9405). As stated in IC9405; the Bureau of Mines evaluated the hydrologic and overburden failure data to assess the response of local ground water to underground coal mining in single- and multiple-seam conditions. Surface subsidence did not appear to play a major role in response of springs at this site. The lack of observed responses was attributed to geologically driven site-specific conditions that buffered the effects of mining. These conditions included thickness of overburden, presence of hydrophilic clays and estimated elevation of fracturing.

To identify any mining related impacts to the perched aquifer systems above the mine horizon PacifiCorp monitors a significant number of springs which have been undermined or will be undermined within the next five years (see Hydrologic Monitoring Schedule in Appendix A and Hydrologic Monitoring Map MFS1851D). A field verification meeting will be held each year with the government agencies involved to determine if changes in the springs monitored are required. Each year in the annual Hydrologic Monitoring Report spring flow rates will be compared to East Mountain climatology as to how closely spring discharge follows local annual precipitation or to verify any mining related impacts.

### 2. Mining in the Rilda Canyon Area-NEWU~~A~~SSD Springs

As discussed in R645-301-721, North Emery Water Users ~~Association~~ Special Services District (NEWU~~A~~SSD), a major concern to PacifiCorp is the proximity of proposed mining activities in Rilda Canyon to the Rilda Canyon springs. Probable hydrologic consequences of mining in the vicinity of the Rilda Canyon Springs is described in Volume 9 Hydrologic Section and will not be repeated here. Mitigation alternative information for Rilda Canyon Springs can be found in Volume 9 Appendix D.

### 3. Mining in the Mill Fork Area - Little Bear Spring

The potential for mining activities to impact Little Bear Spring is believed to be minimal for several reasons. First, the spring is located one and one half (1½) miles from the Mill Fork ~~permit area~~ lease UTU-88554 and more than two miles from the nearest proposed mining activities (refer to

Hydrologic Monitoring Map MFS1851D). Second, Little Bear Spring discharges from an active zone groundwater system that is in good communication with shallow recharge sources. These types of groundwater systems are isolated from the deep, inactive zone groundwater systems encountered in area coal mines.

Although the headwaters of the Mill Fork drainage ~~is~~are within the Mill Fork ~~permit~~ Area, the potential for adversely affecting surface waters in the drainage is remote. In those areas in the headwaters region that are proposed for full extraction mining, the stream channel resides primarily on the North Horn and Price River Formations (Appendix B Figure 5). The thick sequence of relatively low permeability rock that separates the mined horizon from the stream channel effectively prohibits the downward migration of surface water and groundwater into deeper horizons. Thus, the potential for diminished flow in Mill Fork Creek, and corresponding decreases in the recharge to Little Bear Spring, is minimal (for alternative mitigation information related to Little Bear Spring refer to R645-301-731.530).

PacifiCorp cooperated with Huntington City, Elmo City, Cleveland City and CVSSD in developing a comprehensive mitigation plan. The agreement was signed on July, 2004. As part of the agreement, PacifiCorp constructed a water treatment plant in 2005 located near at the existing Huntington City plant in Huntington Canyon. The mitigation agreement information is found in Appendix D of Volume 9.

## 4. Interception of Groundwater by Mine Workings

As previously discussed in this section, the Blackhawk Formation consists of inter-bedded layers of sandstone and mudstone separated by various mineable and non-mineable coal seams. The sandstone beds-fluvial channel systems are generally massive while the mudstone layers are fine textured and have a tendency to swell when wet and decompose into an impervious clay. Because of the aquiclude formed by mudstone layers in the North Horn Formation, recharge to the Blackhawk Formation is limited, even along major fault systems. Due to the lithologic characteristics of the Blackhawk, both vertical and horizontal migration is constricted.

The interception of groundwater varies and is dependent on several factors. One of the most significant is that when the mine enters virgin country, a significant amount of water is liberated. In virtually all cases the amount of water which flows into the mine exceeds the recharge and, in time, the water inflow decreases in volume. If new areas are not mined, the discharge from the mine will decrease accordingly. As reported in the annual Hydrologic Monitoring reports, flow rates for individual areas including fault zones normally decrease to less than ten percent of the initial flow rate. (Historical information can be found in the annual Hydrologic Monitoring reports.)

Long term monitoring of water producing zones in both Deer Creek and Wilberg/Cottonwood mines has established that once base flow has been reached, the flow is consistent over time. Monitoring has not indicated any seasonal or yearly variations (see annual Hydrologic Monitoring reports for in-mine long term flow information).

As pointed out by Theis (1957, p. 3), water discharged from a well or, in this case, underground mines, must be balanced by 1) an increase in recharge to the groundwater system, 2) a decrease in natural discharge from the system, or 3) a decrease of groundwater in storage, or by a combination of all of these. As hydrologic studies have shown and monitoring of intercepted groundwater has verified, recharge into the underground workings is limited even in areas of faults and fractures. Based on the hydrologic characteristics of the Blackhawk and the underlying Star Point Formation (low porosity and hydraulic conductivities) and data from surface hydrologic monitoring, decrease in the natural discharge of the system is considered to be only a minor factor; therefore, groundwater intercepted in the ~~permit~~ mine plan area is believed to be from storage. One factor which verifies this conclusion is rapid dewatering of intercepted groundwater with no apparent change in the surface hydrological system. As the USGS pointed out in Open File 81539 and monitoring by PacifiCorp has shown, the majority of surface flow is due to the runoff from the winter snowpack and not from groundwater recharge. It is possible that over a long period of time the groundwater system of the Cottonwood and Huntington Creek drainage systems could be impacted from a slight reduction in recharge; but this is more than offset by the interception of the groundwater, especially in terms of quality, which will be discussed later.

*a. Depletion Of Storage*

Two main areas-types of groundwater depletion are projected to occur within the Mill Fork ~~permit~~ Area and will be discussed separately, 1) fluvial sandstone channel systems, and 2) geologic structures; including folding, faults and fractures.

*(1) Fluvial Sandstone Channel Systems*

In the Deer Creek Mine sandstone channels (ancient river systems) overlie and scour into the underlying strata (refer to Volume 9 Maps HM2 and HM3 updated annually in the Hydrologic Monitoring Reports). Based upon drilling results, similar geologic conditions are projected to occur in the Mill Fork ~~permit~~ Area. These channel systems were part of a deltaic depositional setting active during and after the coal forming peat accumulation. The largest influx of water originates from the roof when mining advances beneath sandstone top. The sandstone, which is semipermeable and porous, affords an effective route of water transport. Mudstone, siltstone, and interbedded materials generally act as aquicludes which impede water flow unless fracturing of the formation has allowed for secondary permeability. Of the water producing areas, those closest to the active mining face exhibit the greatest flows. As mining advances, the area adjacent to the active face continues to be excessively wet and previously mined wet areas experience a decrease

in flow. Data collected by PacifiCorp indicates a ninety percent reduction in water flows from roof sampling sites over a five month period (or less) as the mining face is advanced (review annual Hydrologic Monitoring reports). It has also been noted that the outermost entries of a multiple entry system remain wet for a longer period of time than the inner entries. It appears that the water source is being dewatered since excavated areas of the mine do not continue to produce water indefinitely. The water source must be either of limited extent, i.e., a perched aquifer, or have a limited recharge capacity, i.e., poor horizontal and vertical permeability (refer to Volume 9 Figure HF42 depicting an idealized view of the dewatering process).

As documented in Appendix B, in-mine groundwater occurs in isolated, inactive systems as demonstrated by the small $^{3}H$ content and radiocarbon ages of mine waters which range from 2,000 to 19,000 years (Appendix B Table 5), with the exception of two sites which are discussed below. This indicates that in-mine waters are not in hydraulic connection with near-surface spring waters that respond to seasonal and climatic changes and contain anthropogenic carbon and appreciable amounts of $^{3}H$.

*(2) Geologic Structures Including Folding, Faults And Fractures*

*Folding:* Strata in the Mill Fork Area are gently folded in two broad structural features. The Flat Canyon Anticline crosses the southeastern portion of the ~~permit~~ lease area. This anticline trends southwest to northeast, and plunges to the southwest. Dips in the anticline range from two to six degrees with the south limb dipping the steepest. To the north, the north limb of the Flat Canyon Anticline becomes the south limb of the Crandall Canyon Syncline, a flat-bottomed syncline. This syncline also trends southwest to northeast. Dips on the northwest side are much steeper than on the southeast side.

Groundwater inflow related to folding has been minimal in the vicinity of the Mill Fork ~~permit~~ Area, except for the western portion of the Trail Mountain Mine located approximately nine miles to the south of the Mill Fork ~~permit~~ Area. A major geologic structure known as the Straight Canyon Syncline bisects the Trail Mountain Mine area. Gradient from the portal area to western portion of the mine was in excess of nine hundred feet in a distance of approximately three miles. The trough of the Straight Canyon Syncline can be observed at the Joes Valley Dam. Drilling along the trough of the syncline intercepted artesian flow (refer to Trail Mountain Permit: Hydrologic Section for discussion of well TM-3 located in Section 3, Township 18 South, Range 6 East). As mining progressed to the west in the Trail Mountain Mine, groundwater inflow was encountered related to depressurization of the Star Point Sandstone.

As stated above, the strata in the Mill Fork area are gently folded in two broad structural features with overall gradients across the lease of approximately one hundred feet in a distance of approximately three miles. Exploration drilling has been conducted along the trough of the

Crandall Canyon Syncline on the eastern and western boundaries of the lease (refer to map MFU1828D). Drilling conducted by PacifiCorp has not detected measurable groundwater inflow from the lower Blackhawk/Star Point formations (refer to R645-301-600 Appendix B). Personnel communications with representatives of Genwal, hydrologic studies conducted at the Genwal Mine (refer to Genwal MRP: Hydologic Section) and observations of the mine verify that interception of groundwater related to the depressurization of the Star Point Sandstone is minimal.

As stated earlier, Little Bear Spring is located in Little Bear Canyon along the base of the Crandall Canyon Syncline. Little Bear Spring discharges from active zone groundwater system that is in communication with shallow recharge sources. These types of groundwater systems are isolated from the deep, inactive zone groundwater systems encountered in the coal mines. PacifiCorp's Hydrologic Monitoring Program has been specifically designed to monitor potential impacts to the lower Blackhawk and Star Point Sandstone formations with the inclusion of springs MF-213 and Little Bear Spring (refer to map MFU1851D and Appendix A).

*Faults and Fractures:* Groundwater inflows associated with the Roans Canyon Fault system have occurred in the Deer Creek Mine and the Joes Valley Fault in the Crandall Canyon Mine. Hydrologic concerns regarding fault inflows are; 1) the capture of water supplying baseflow to creeks or springs, and 2) the discharge of fault-related water to creeks. In general, we do not believe that fault-discharge waters are tied to active, modern groundwater systems. However, locally fault related groundwater inflows, associated with the Roans Canyon and Joes Valley faults, have hydraulic communication with the surface as evidenced by their $^{3}H$ contents. Wells drilled into and near the fault systems demonstrate that there is limited lateral communication along the fault system and the radiocarbon age most fault-discharge waters are 2,500 or more years. Mining within 200 to 300 feet of the Joes Valley Fault could intercept appreciable quantities modern near surface water. For a complete discussion of faults and fractures of the Deer Creek Mine southeast of the Mill Fork ~~permit~~ Area refer to Volume 9 Hydrologic Section - PHC).

To prevent interception of groundwater from the Joes Valley Fault, the Forest Service included Stipulation #19 to the Special Coal Lease Stipulations. It states, *" Except at specifically approved locations, mining that would cause subsidence will not be permitted within a zone along the Joes Valley Fault determined by projecting a 22 degree angle of draw (from vertical) eastward from the surface expression of the Joes Valley Fault"* . A buffer zone entitled "Joes Valley Fault Buffer Zone", (22 degree angle of draw from the lowest coal seam - Hiawatha), is indicated on all maps associated with the Mill Fork ~~permit~~ Area.

On January 25 (revised March 20), 2006, PacifiCorp filed an application for a federal coal lease by application (LBA) for access to unleased federal coal adjacent to ~~the Mill Fork State Lease~~ UTU-88554. The serial number assigned to this LBA is UTU-84285.

Leasing of the Mill Fork West Extension Tract, serial number UTU-84285, would encourage and enable the greatest ultimate recovery and conservation of this natural resource, while promoting full development of the economically recoverable coal located between the western lease line of ~~the Mill Fork State Lease ML-84258~~ UTU-88554 and the Joes Valley Fault zone which would otherwise become subject to bypass. This would be accomplished by allowing westward mine development and extraction beyond the existing Mill Fork western lease boundary until mining advancement is terminated due to the actual location of the Joes Valley Fault (refer to R645-301-600 Geology Section for a complete discussion of the location of the Joes Valley Fault).

Mining in the Federal Lease UTU-84285 area ~~will~~ consisted of longwall gateroads, setup and bleeder entries. First mining ~~will be~~ was conducted with continuous miners. Longwall gateroads were ~~will be~~ extended to the west but in no case did ~~will~~ second/full extraction mining occur within the Joes Valley buffer zone. The Joes Valley buffer zone was established during the NEPA process to prevent interception of groundwater from the Joes Valley Fault. No pillars were ~~will be~~ removed within the Joe Valley buffer zone during mining within the UTU-84285 area, and therefore no subsidence ~~will~~ occurred.

In an effort to minimize interception of groundwater from the Joes Valley Fault, as mining in the longwall gateroads approaches within 200 feet of the projected location of the fault, an underground drill ~~will be~~ was set up in the western extent of each continuous miner section development and exploration holes were drilled roughly perpendicular to the known fault trend until they intersect the fault zone. ~~The holes will be drilled slightly upward at the start to aid circulation. The holes will be roughly 3" in diameter.~~ Drilling results were ~~will be~~ examined by a professional geologist for evidence of faulting, fracturing, and water influence (weathering). Presence of faulting was ~~be~~ determined by fault gouge, weathering, and/or sudden lithologic change. This is a large displacement fault, fault gouge should ~~be~~ have been significant.

Precautions against water inflow ~~will~~ included cementing at least 10 feet of "surface" casing with a full flow valve, through which the hole was ~~ill be~~ drilled. ~~This will allow shutting the valve in the event of large water inflows~~. No~~If~~ significant water ~~is flowing at the time of completion of the hole, the hole will be cemented to prevent continued~~ inflows ~~of water~~ were observed.

If faulting ~~is~~ was encountered prior to reaching the planned bleeder entries, mining ~~will~~ was to be terminated and the bleeder entries ~~will be~~ relocated. At least 50 feet of solid coal ~~will be~~ was left between the bleeder entry and the fault. ~~Energy West~~ PacifiCorp would have ~~will~~ notified ~~y~~ DOGM and the surface management agency immediately if substantial water (greater than 50 gpm) ~~is~~ was produced from the drill holes, entries or the Joes Valley Fault. Horizontal drilling has delineated the fault along its entirety on the west side of the UTU-88554 area. Gateroad

entries and bleeder developments were completed adjacent to the fault according to the permit stipulations as of August, 2013. No fault intercepts were made by mine workings, and no significant groundwater inflows were encountered.

Mining in the Genwal Mine located to adjacent to ~~the Mill Fork State Lease~~ UTU-88554 provided hydrologic information related to the Joes Valley Fault. Minor quantities of groundwater were intercepted in entries which penetrated the fault (Genwal Main West -Mine visit by Chuck Semborski and Ken Fleck) and in drill holes within UTU-77975 (personal communication with John Lewis - Genwal Mine engineer). ~~Although significant groundwater has not been intercepted by mining near the Joes Valley Fault, Energy West has developed an emergency plan contend with interception of groundwater as a preventative measure. The plan consists of the following:~~

~~1) Notify governmental agencies.~~
~~2) Remove all mining equipment.~~
~~3) Erect two solid concrete block seals at least 2 feet apart with appropriately sized de-watering pipe with valve at the bottom of the seal.~~
~~4) Quick dying cement will be pumped into the space between the two seals.~~
~~5) After the cement has cured, the de-watering valve will be closed.~~

*b. Quality*

The mines in the coal fields of the Wasatch Plateau tend to act as interceptor drains. The groundwater that is brought to the surface has a lower dissolved solids content than would have existed were the water to continue its downward movement through shale layers, dissolving increased amounts of salt with distance (Southeastern Utah Association of Governments, 1977; Vaughn Hansen Associates, 1979; Danielson et al., 1981).

Additional studies by PacifiCorp have confirmed the primary findings of the USGS concerning regional trends in quality. Originally, ~~decreasing~~ deteriorating quality from north to south was believed to depict the groundwater flow direction, and the quality ~~decreased~~ deteriorated as a function of the time it traveled through the strata. The time travel component is probably an important factor. But in 1985 a surface exploration program identified the existence of an area of residual heat from an ancient burn on the outcrop throughout the southern portion of East Mountain. The high temperature was also explored within the mine and a portion of reserves were lost because of the situation. It is now theorized that the high temperature water dissolved the mineral constituents of the formations, thereby altering the water chemistry. The quality also ~~decreases~~ deteriorates vertically downward because of the influence of marine sediments as well as along the trend of decreasing quality from north to south.

*c. Quantity*

As stated earlier, interception of groundwater varies and is dependent on several factors. One of the most significant is that when the mine enters virgin country, in some areas significant amounts of water are liberated. Mining quickly dewaters the saturated horizon immediately above the mined horizon and this water is not replaced as evidenced by the rapid decline and often complete drying of roof drips. In-mine groundwater occurs in isolated, inactive systems as demonstrated by the small $^{3}H$ content and radiocarbon ages of mine waters which range from 2,000 to 19,000 years (refer to Appendix C: Table 5). This indicates that in-mine waters are not in hydraulic connection with near-surface spring waters that respond to seasonal and climatic changes and contain anthropogenic carbon and appreciable amounts of $^{3}H$.~~s~~

Based on data collected by PacifiCorp, discharge of intercepted groundwater from the Mill Fork Area was ~~has~~ been similar to that of the Deer Creek Mine and adjacent Genwal Mine. Discharge from the these ~~to~~ mines range from ~~650~~ 500 to 1,500 gpm (Deer Creek Mine average discharge ranged from 1,000 to 1,500 gpm [Energy West Mining Company ~~2001~~ Annual Reports], discharge from the Genwal Mine ~~averages~~ averaged approximately ~~650~~ 900 gpm [~~Genwal 2000 Annual Report~~ data received from UtahAmerican Energy - Crandall Canyon Mine Flows]). All of the intercepted groundwater from the southern portion of the Deer Creek Mine will be ~~discharge~~ discharged to the Deer Creek drainage system. Intercepted groundwater from the Mill Fork Area will be routed to the Rilda Canyon 1st Right Portals and piped directly to the Huntington Power Plant Settling Pond. Discharge from the Deer Creek Mine will be monitored as specified in the UPDES permit (refer to Volume 9, Appendix B).

*d. Post Mining*

The monitoring of in-mine water sources has shown that the long term water flow from a given area is much less than ten percent (10%) of the initial flow from the area. Most of the current inflow into the mine workings is from areas where water storage has not been depleted. After the storage has been depleted, the flow will reduce to roughly equal the recharge rate which is expected to be less than ten percent (10%) (data presented earlier in this report) of the current discharge rate. Prior to the termination of production (January 7, 2015), ~~The current~~ discharge rate from the Deer Creek Mine averaged approximately 1000 to 1500 gpm; therefore, the postmining discharge rate is expected to ~~be approximately~~ diminish to 100 to 150 gpm. For verification purposes, PacifiCorp has monitored selected areas of the mine to formulate discharge recession curves over time, enabling a better understanding of the ratio of initial discharge rates and long-term post mining discharge values (discharge recession curves from long-term in-mine water sources can be found in Volume 9 - Hydrologic Support Information, In-Mine Discharge Recession Curves).

Deer Creek Mine portals were sealed April 17, 2015 as a facet of the Deer Creek mine closure process. All mining equipment including the mine dewatering system was removed from the mine prior to sealing. Withdrawal of all mining equipment inby the parallel plug locations

commenced upon completion of mining (refer to Map MFU1902D for mine closure sequencing, Comprehensive Environmental Response, Compensation, and Liability Act inspections [equipment removal] and areas of belt structure removal). PacifiCorp coordinated removal of the mining equipment, including conducting environmental inspections, with the subsurface management agency and State of Utah regulators. A double redundant French drain system (two separate well screen intake setups installed in two separate portals) was installed in the two lowest elevation portals at the Deer Creek Mine site to allow for a permanent post mine gravity discharge of groundwater from the southern portion of the mine.

*1) Mill Fork Area/Rilda Canyon Post Mine Closure*

Interception of groundwater in the Mill Fork area necessitated PacifiCorp to design post closure structures to prevent unapproved discharge from occurring at the Rilda Canyon 1st Right Portals. Groundwater intercepted from the Mill Fork mined out areas would naturally gravity flow along the mine entries from the Mill Fork east towards the Rilda Canyon and eventually to the lowest elevation portals – Rilda Canyon 1st Right portals. With the announcement of the Deer Creek Mine closure in December of 2014, PacifiCorp designed and applied for mine closure approval from various government agencies to prevent a prohibited post-mine gravity discharge of water from the portals located in Rilda Canyon.

PacifiCorp currently has two permitted outfalls for Deer Creek Mine, both in Deer Creek Canyon. Deer Creek Canyon portals are within a drainage defined as Category 2 waters, whereas Rilda Canyon portals are within Category 1 waters, per UAC R317-2. Definitions of these categories are as follows:

• Category 1 Waters: Waters which have been determined by the Board to be of exceptional recreational or ecological significance or have been determined to be a State or National resource requiring protection, shall be maintained at existing high quality through designation, by the Board after public hearing, as Category 1 Waters. New point source discharges of wastewater, treated or otherwise, are prohibited in such segments after the effective date of designation.

• Category 2: Waters are designated surface water segments which are treated as Category 1 Waters except that a point source discharge may be permitted provided that the discharge does not degrade existing water quality.

No new point source discharge permits have been or will be issued for the Rilda Canyon portals because new point source discharges within Category 1 waters are prohibited. Intercepted groundwater must be conveyed outside of Category 1 waters in order to be discharged. Therefore, appropriate management of the intercepted groundwater must be established to allow for the mine to cease operations, seal the mine, and complete the reclamation process as set forth in the Utah Division of Oil, Gas and Mining (UDOGM) permit and FS regulations.

Recognizing that new point source discharges, inclusive of Rilda Canyon, are prohibited, PacifiCorp designed the post closure hydrologic bulkheads using the IC 9506 Informational Circular/2008 "Guidelines for Permitting, Construction, and Monitoring of Retention Bulkheads in Underground Coal Mines".

The original preferred plan was to build water-retaining bulkheads to contain all of the intercepted groundwater in the underground mine workings in perpetuity. Efforts undertaken since late 2014 to obtain permission from the Mine Safety and Health Administration (MSHA) and the UDOGM to permanently retain intercepted groundwater underground with concrete bulkheads and possibly to direct overflow water to the Deer Creek Canyon were rejected in April of 2016. A chronology of the bulkhead application is summarized below:

2014

- Reviewed historic bulkhead installations (failures and successes)
- Discussed application protocol with MSHA District 9 Price Field Office
- Designed bulkhead installation based on the National Institute for Occupational Safety and Health (NIOSH) IC 9506 "Guidelines for Permitting, Construction, and Monitoring of Retention Bulkheads in Underground Coal Mines"
- Developed wells from surface for long term monitoring of bulkheads
- Prepared draft application

2015

- January 6, 2015 - Meeting was held with MSHA District 9 Price Field Office
- January 20, 2015 - Initial bulkhead submittal. District 9 requests technical assistance from Mine Emergency Operations (MEO) and Mine Waste and Geotechnical Engineering Division (MWGE)
- March 2, 2015 - Deer Creek Mine receives copy of memorandum from MEO to Russell Riley dated February 23rd outlining deficiencies
- March 2, 2015 - Deer Creek submits Addendum #1 (add air sampling tubes) to address MEO's concerns
- March 12, 2015 - Submitted Addendum #2 (addressing possible impounded water by primary bulkheads)
- April 1, 2015 - Submitted Addendum #3 (relocation of secondary bulkheads from 1st Right x-28 to 1st Right x-4)
- April 10, 2015 - Submitted Addendum #4 (re-sequencing mine closure to provide inspection of both sets of bulkheads)
- May 29, 2015 - Deer Creek received disapproval letter from District 9 with technical reasons for disapproval
- July 14, 2015 – Submitted Addendum #5 (bulkhead application extensively revised to address concerns of the MSHA Mine Waste and Geotechnical Engineering Division letter dated May 15, 2015)

- September 8, 2015 – Deer Creek received disapproval letter from District 9 with enclosed August 21, 2015 report by MWGE
- October, 2015 - PacifiCorp retained J.T. Boyd to conduct a third-party independent review of the Deer Creek Mine closure plan
- October 1, 2015 - PacifiCorp met with Assistant Deputy Director of Labor to outline concerns with MSHA's jurisdictional authority related to mine closure
- December 1, 2015 - received notification from District 9 stating, "We do not have the authority to approve bulkheads for the purposes described"
- December 18, 2015 - PacifiCorp submits application to UDOGM to construct interlocking parallel plugs and seal enhancement
- April 12, 2016 - PacifiCorp receives amendment denial from UDOGM:

  "After spending considerable time reviewing RMP [Rocky Mountain Power] proposed mine closure and particularly the water retention design, the Division, in a routine phone call with Mr. Russell Riley of MSHA on April 11, 2016 was told that his letter of December 1, 2015 had been interpreted incorrectly by you and also by the Division. He emphatically stated that the letter was intended as an unequivocal denial of the plan. He stated that under no circumstances could MSHA approve a water-retaining structure as part of mine closure plan. He asserted that the letter was referring to MSHA's lack of legal authority to approve a plan that requires water retention, not its jurisdictional authority to approve the closure plan. He affirmed that MSHA does have jurisdiction to review and approve mine closure plans and did not waive that jurisdiction for the RMP plan."

MSHA and UDOGM will not allow any water retention as part of the Deer Creek closure plans; water must be directed to the portals to flow unimpeded out of the mine. This response by the agencies necessitates that PacifiCorp develop other alternatives to manage intercepted groundwater that would otherwise discharge from the Rilda Canyon portals in violation of UAC R317-2. Intercepted groundwater from the Mill Fork Area will be diverted to the Rilda Canyon 1st Right portals. Similar to the structures at the Deer Creek portals, a double redundant French drain system (two separate well screen intake setups installed in two separate portals) are proposed for the Rilda Canyon 1st Right portals. Gravity discharge from the Deer Creek and Rilda Canyon portals will resume after the mine floods to the elevation of the portals discharge structures (refer to Map MFU1905D and Volume 11 Engineering Section, Figures R645-301-500D).

~~There is no reason to assume the~~ Post - mining discharge water quality ~~will differ from that currently being discharged~~ is predicted to be consistent with pre-closure analysis, except for Total Iron which will be detailed below (see Groundwater Quality section for pre-closure

analysis). The cumulative effect of discharge water on the receiving stream will be insignificant based on data collected from Deer Creek and in comparison to flow differential.

*2) Post Mining Water Quality Analysis – Total Iron:*

PacifiCorp is aware of the elevated iron content of the mine water discharge from the adjacent sealed Genwal Mine. Based on published reports and testimony before the Board of Oil, Gas and Mining (December 2011, Docket No. 2010-026), the elevated iron concentrations are attributed to the oxidation of pyrite or sulfide minerals in the flooded portions of the mine.

PacifiCorp agrees with Peterson Hydrologic that the situation encountered in Genwal and a portion of the Deer Creek Mine is unique geologic occurrence and is spatially isolated to a narrow band bisecting the Mill Fork area. In addition, as pointed out by Peterson Hydrologic, long term discharges from the Blackhawk Formation from surrounding mines have not produced mine discharge waters with elevated total iron. PacifiCorp currently monitors the sealed Cottonwood Mine (UPDES-001) mine discharge water and has not recorded total iron values exceeding minimum detection limit of 0.05 mg/l.

PacifiCorp evaluated the hydrologic monitoring data received from UtahAmerican Energy on the trend of total iron discharge from the Crandall Canyon mine to assess long term potential occurrence of elevated mine discharge water from Deer Creek. The occurrence at the Genwal facility was complicated given the fact that the discharge was uncontrolled and not anticipated. Based on this evaluation, structures such as hydrologic bulkheads/parallel plugs were proposed to be installed in strategic locations in the Deer Creek Mine to control groundwater movement.

*3) Identified Hydrologic Concerns of the Mill Fork Lease Area:*

In the Mill Fork Area, all longwall panels trend east - west. On the west side of these panels is the Joes Valley Fault system. The north developments are restricted by the Crandall Canyon mine workings. A barrier of unmined coal separates the longwall panels from both the Joes Valley Fault and the Crandall Canyon mine workings. The northwestern portion of the Mill Fork Area dips toward the Joes Valley Fault. The eastern portion of the Mill Fork Area dips toward the east.

Groundwater from the Mill Fork mining area and the eastern portions of the lease flows to the east and is currently collected at the heading of 17$^{th}$ West and directed into the 7$^{th}$ North sump (refer to Map DU1901D). Groundwater from the northwest panels will eventually drain through the seals at 7$^{th}$ North XC-39, and would be collected in the 7N sump if the mine is still operating. Groundwater collected in this sump has contact with the zones of coal that contain the elevated sulfur concentrations and the discharge water from the sumps has elevated concentrations of total iron. Because the eastern portion of the Mill Fork Area dips downward to the east, PacifiCorp

projects that these waters will discharge from the Rilda Canyon 1st Right portals if not contained within the mine.

PacifiCorp initiated an underground hydrologic monitoring program in May 2012 to assess the potential impacts of groundwater with elevated iron from sealed areas in the Hiawatha seam. Water samples were collected from the 11th and 17th West seals in the Hiawatha seam and 10th North drain (no longer accessible) from the Blind Canyon seam (refer to Map MFU1904D). Elevated iron in excess of the State of Utah Department of Environmental Health - Utah Pollutant Discharge Elimination (UPDES) limitation of 1.0 mg/l has been detected from the Hiawatha sampling sites. The values are similar to those recorded during the high-iron discharge situation recently experienced at the adjacent Crandall Canyon Mine.

*4) Water Chemistry Assessment of the Mill Fork Area:*

Mayo and Associates LLC was contracted by PacifiCorp to conduct a geochemical investigation of the elevated concentrations of sulfur in the coal and the elevated total iron concentrations found in the discharge from the Mill Fork Area of the mine. PacifiCorp has concerns that the elevated iron concentrations in the mine water from the Mill Fork Area would not comply with the effluent limitations of the Utah Pollution Discharge Elimination System (UPDES) for total iron should this water discharge to the surface.

The Mayo Report concludes the following (refer to Geochemical Evaluation of Groundwater with Elevated Iron (Mayo & Associates, 2015):

1. Zones of elevated sulfur and iron occur in the Hiawatha seam coal in the Mill Fork Area workings.
2. Several factors suggest that gypsum and $MgSO_4$ dissolution are the primary sources of the elevated concentrations of $SO_4^{2-}$ in both the Hiawatha 17th West seals and the Blind Canyon borehole groundwaters. The factors are: 1) the very positive $\delta^{34}S$ values of all sampled groundwaters, 2) the $SO_4^{2-}$ concentrations in mine water greatly exceed the concentration available from iron sulfide oxidation, and 3) laboratory leaching experiments demonstrate that almost all of the $SO_4^{2-}$ is from the dissolution of oxidized sulfate minerals.
3. Groundwaters discharged from the Hiawatha seam mine workings in the Mill Fork Area contain elevated concentrations of total iron which makes the water rust colored when oxygenated. This elevated total iron is associated with groundwater that has contact with the elevated sulfur zone Hiawatha seam coal.
4. Based on a 1st order calculation, approximately 958 tons of iron sulfide minerals (pyrite and marcasite) will be potentially available in the elevated sulfur zones to interact with in-mine groundwater at the time of projected mine closure.
5. Approximately 600 tons of iron would also be available for oxidization from the conveyor belt components if the beltlines are abandoned and left in the mine workings.

6. Chemical interaction between incoming groundwater containing oxygen and the elevated sulfur zone results in iron sulfide oxidization and is responsible for the formation of rust colored iron hydroxide which is reported as total iron in laboratory analysis.
7. Assuming that all of the potentially available iron sulfide mineralization will have contact with oxygen rich water it would take about 75 years to exhaust the total supply of iron sulfide. If the beltline iron is included the time to exhaustion would exceed 100 years. When realistic in-mine conditions are considered it is likely that supply of readily available iron sulfide would be exhausted in a few to tens of years under present conditions.
8. Water quality associated with two future mine closure options have been evaluated:
   a) The first condition, call herein the Open System, envisions groundwater discharging to the surface from the Rilda Canyon Portals via Mill Fork Access workings. This discharge water would be continually oxidized and would contain elevated concentrations of total iron for an indefinite period of time. Total iron concentration in the range of 1-3.5 mg/l would continue for several years. The water will also contain elevated $SO_4^{2-}$.
   b) The second condition, called herein the Closed System, envisions no surface groundwater discharge at Rilda Canyon due to the construction of bulkheads in the Mill Fork Access workings. The water impounded in the workings behind the bulkheads would become reducing and would attain elevated and steady state concentrations of total ion and $SO_4^{2-}$.

For the full description of the water chemistry of the Mill Fork Area, refer to the geochemical evaluation conducted by Mayo and Associates for Energy West Mining in 2014. This document is found in Appendix D Final Closure Plan - Geochemical Evaluation of Groundwater with Elevated Iron (Mayo & Associates, 2015).

*5) Remedial Approaches to Mitigating Potentially Elevated Iron Water Mine Water Discharge:*

In an effort to maintain acceptable compliance quality discharge water from the Deer Creek Mine, PacifiCorp is proposing the construction of water diversion pipeline from the Rilda Canyon 1st Right Portals to the Huntington Power Plant Settling pond. PacifiCorp will sub-contract the installation of the pipeline to a reputable contractor with experience to assure quality control and quality assurance of the project.

Groundwater intercepted in the mine, including groundwater with potentially elevated iron from the Mill Fork Area, will gravity flow to the Deer Creek portals (southern portion of the mine will discharge at the Deer Creek portals – Deer Canyon, Mill Fork Area will discharge at the Rilda Canyon 1st Right portals). Final sealing of the Deer Creek portals completed April 17, 2015 included installing a French drain system approved by MSHA and the BLM. PacifiCorp has developed a strategy to control the mine water discharge depending on water quality (concentration

of Total Iron) to comply with the UPDES stipulations. Prior to the interception of the pyritic split in the Mill Fork Area, post mine gravity discharge water quality was predicted to be in compliance with UPDES permit limitations. PacifiCorp has revised the final reclamation plans to accommodate a buried pipeline from the Rilda Canyon 1st Right portals routing groundwater from the Mill Fork Area with potentially non-compliant water (elevated total iron concentrations exceeding 1 mg/L [UPDES limitation]) to the Huntington Power Plant Settling Pond. Predicting post mine gravity discharge quality of the Mill Fork Area will depend on a number of factors including:

- Water diverted to the Huntington Power Plant will be used in plant operations and will not be considered a discharge according to DWQ and will not require reporting through the UPDES system (June 14, 2016 meeting with DWQ)
    - U.S Army Corps of Engineers reaffirmed the consumptive use stating "there will be no discharge of material into jurisdictional waters associated with the project. Therefore, no permit is required from this office" (email received from Michael Pectol, U.S.Army of Engineers, November 10, 2016)
- Combined discharge rates from Mill Fork Area (non-elevated and elevated iron sources)
- Concentration of total iron from the areas influenced by the pyritic split in the Mill Fork Area compared to the historic water quality from non-affected areas
    - Mill Fork Area – Elevated Iron Affected Areas
        - Predicted total iron peak concentration - ~ 3.0 mg/L (based on in-mine sampling data and monitoring history of the adjacent Genwal Mine)
            - Finite amount of available of free iron from pyritic split
            - Total Iron concentration is time dependent with concentration dissipating over time
                - Genwal Mine (adjacent to the Mill Fork Area) with similar geologic occurrence experienced elevated total iron values ranging from approximately 4.0 mg/L slowly dissipating to UPDES compliance level of 1.2 mg/L.
    - Mill Fork Area – Non-Affected Area
        - Intercepted groundwater total iron concentration - ND (not detected), reported as <0.05 mg/L
- Timing of discharge sequence and water quality blending ratios
    - Gravity inflow of water from the Mill Fork Area, both from the non-affected and affected areas, will slowly migrate to the south eventually blending and discharging at the Rilda Canyon 1st Right Portals. Overall total iron concentration of the mine discharge will depend upon inflow rates from the respective areas and diluted total iron concentration from the Mill Fork Area.
    - PacifiCorp has designated two main areas of potential sealed area drainage; Zone A: 11th – 17th West and B: 7th North (refer to MFU1904D).

- Zone A: 11th - 17th West
  - 11th - 17th West was mined from June 2004 through February 2008
  - Permanent seals were installed April 2008
  - Post sealing gravity discharge occurred from 11th and 17th West seals (refer to Map MFU1904D)
    - Post sealing gravity discharge rates (2008 through 2015):
      - 11th West: ~ 5 gpm
      - 17th West: ~ 100 gpm
    - Post mine closure sealing, March 2015 (temporary mine closure pending final approval for permanent closure approval)
      - 11th – 17th West sealed area
        - ~300 gpm (refer to Appendix D Final Closure Plan: 7th North Sump Discharge January 2016 through December 2016)
  - Water quality samples have been collected from the sealed areas on a routine basis since May 2012 (refer to Appendix D Final Closure Plan: Deer Creek Mine Sealed Area Water Quality Analysis 2012 - 2016)
- Zone B: 7th North
  - 7th North was mined from May 2009 through January 2015.
  - Permanent seals were installed March 2015.
  - All of the mined out workings inby the 7th North seals are north of the Flat Canyon Anticline (structural high). Structural high may influence the final aquifer stabilization.
    - Structural high induces hydrostatic head
    - Cessation of mining operations terminates area of potential groundwater drainage
    - Ending of intercepted groundwater pumping (end of perched aquifer withdrawal)
  - PacifiCorp installed an air sampling tube line 3,000' inby the 7th North seals to provide early warning of rising water (refer to Map MFU1904D).
  - PacifiCorp calculated the void area inby the 7th North seals (gateroad development and longwall gob). Longwall gob porosity was evaluated varying from 10% to 20%. Assessment of the void area provided PacifiCorp with potential discharge rates based on the time of detection.

- Routine monitoring of the 7th North seals air tube as not detected water (January 2017, approximately 700 days from the date the seals were installed)
    - Based on the void calculations the inflow inby the 7th North seals is projected at a maximum of approximately 200 to 300 gpm as of January 2017.
    - Aquifer stabilization of the Mill Fork area may have occurred with the increased rate of discharge observed from 11th – 17th West from pre/post closure sealing

- In-mine monitoring of water quality from intercepted groundwater draining from the 11th – 17th West sealed area is consistent with projections of an open draining system detailed by Mayo & Associates (refer Geochemical Evaluation of Groundwater with Elevated Iron (Mayo & Associates, 2015) Appendix D Final Closure Plan)
    - Total iron decreased from slightly over 3.0 mg/L (May 2012 sample results) to approximately 0.61 mg/L to 1.36 mg/L (November 2016 and December 2016 sample results, refer to Appendix D Final Closure Plan: Deer Creek Mine Sealed Area Water Quality Analysis 2012 - 2016).
    - Sulfate decreased from 153 mg/L to 93 mg/L, refer to Appendix D Final Closure Plan: Deer Creek Mine Sealed Area Water Quality Analysis 2012 – 2016)
- PacifiCorp evaluated post mine closure contribution of total iron to mine discharge based on the following inputs (refer to Appendix D Final Closure Plan – Iron Blending Sensitivity Analysis)
    - Base Case
        - 11th – 17th West (Area A – refer to Map MFU1904D)
            - Flow rate: 300 gpm
            - Total iron start values at the time of final mine closure: April 2017
                - 1.0 mg/L
                - 0.8 mg/L
                - 0.6 mg/L
        - 7th North Sealed Area (Area B – refer to Map MFU1904D)
            - Flow rate: 0 gpm (based on monitoring data)
    - Flow and total iron projections two and four years after final mine closure
    - Post mine closure water quality projections
        - Total iron
            - At time of mine closure

- Total iron varies from 0.60 mg/L to 1.00 mg/L
- Two years after mine closure
  - Total iron varies from 0.48 mg/L to 0.80 mg/L
- Four years after mine closure
  - Total iron varies from 0.38 mg/L to 0.64 mg/L
- Projected total iron values of the mine discharge are less than the current UPDES limitation for Outfall 002 of total iron of 1.0 mg/L

- Zone A and B Groundwater Contribution Case
  - 11th – 17th West (Area A – refer to Map MFU1904D)
    - Flow rate: 300 gpm
    - Total iron start values at the time of final mine closure: April 2017
      - 1.0 mg/L
      - 0.8 mg/L
      - 0.6 mg/L
  - 7th North Sealed Area (Area B – refer to Map MFU1904D)
    - Flow rate: 300 to 100 gpm
    - Total iron calculated based on regression analysis formula from 11th - 17th monitoring data
    - Total iron start values at the time of final mine closure: April 2017
      - 3.23 mg/L (refer to inputs (refer to Appendix D Final Closure Plan – Iron Blending Sensitivity Analysis)
  - Flow and total iron projections two and four years after final mine closure
  - Post mine closure water quality projections
    - Total iron
      - At time of mine closure
        - Total iron varies from 1.26 mg/L to 2.12 mg/L
      - Two years after mine closure
        - Total iron varies from 0.91 mg/L to 1.50 mg/L
      - Four years after mine closure

- Total iron varies from 0.58 mg/L to 0.91 mg/L
- Projected total iron values of the mine discharge are less than the current UPDES limitation for Outfall 002 of total iron of 1.0 mg/L after 4 years of mine discharge (maximum flow contribution from Area B).

Final reclamation plans for Deer Creek will include a buried pipeline from the Rilda Canyon 1st Right portals to the Huntington Plant Settling Pond (see Volume 11 Engineering Figure R645-500 D for details of the Rilda Canyon 1st Right portal structures). Hydrologic monitoring of the mine discharge will include the gravity outfalls at Deer Canyon (UPDES Permit #UT0023064-002) and mine water diverted through pipeline to the Huntington Power Plant Settling Pond. Water diverted to the Huntington Power Plant will be used in plant operations and will not require reporting through the UPDES system (June 14, 2016 meeting with DWQ). The following table outlines the strategies and action plan to protect the hydrologic balance and limit potential offset impacts related to discharging groundwater with potentially elevated total iron from the Deer Creek Mine – Rilda Canyon 1st Right portals to the receiving stream (Huntington Creek):

| Deer Creek Mine Final Mine Closure<br>Mine Water Discharge Monitoring<br>Water Quality Parameter of Concern – Total Iron (UPDES permit limitation, 1.0 mg/L) See Note 1 | | | |
|---|---|---|---|
| **Concentration (mg/L)** | **Trend of Analysis** | **Monitoring Frequency** | **Location of Discharge** |
| **> 1.00** | ▼▲ | Monthly | Huntington Plant for consumptive use |
| **< 1.00 to 0.50** | ▼ | Monthly | Huntington Plant for consumptive use |
| **<0.50** | ▼ | Monthly See Note 2 | Huntington Plant for consumptive use |
| **Trend Analysis**<br>**▼► - Decreasing to Stable**<br>**▼ – Decreasing** | | | |
| **Notes**<br>**1. – PacifiCorp applied for an additional outfall (003) for the Deer Creek UPDES permit to the Department of Water Quality (DWQ) September 15, 2016. DWQ anticipates completing analysis for Outfall 003 during the first quarter of 2017. Concentration target level monitoring will be based on DWQ's permit limitation accessed for Outfall 003.**<br>**2. – After one year of monitoring, results of <0.5 (or UPDES limitations on Total Fe), PacifiCorp will evaluate potential discharge options; 1) continue discharging to the plant, 2) divert discharge to receiving stream at the Huntington Plant location – Division of Water Quality approval required** | | | |

*6) National Environmental Policy Act (NEPA) permitting process:*

After receiving the April 12, 2016 denial from UDOGM for the Interlocking Parallel Plugs application, PacifiCorp coordinated a meeting with parties of interest (BLM, USFS, Emery County, UDOT) to evaluate permitting requirements for the proposed mine relief drainage pipeline from the Rilda Canyon 1st Right Portals to the Huntington Plant Raw Water Pond. PacifiCorp selected the route to minimize potential environmental and infrastructure disturbance:

- Pipeline corridor would be routed along existing rights-of-way, Emery County 306 and State Highway 31 (within existing previously disturbed boundary)
- Proposed pipeline corridor minimizes potential impact to archeological resources
- Proposed route is outside of riparian and wetland resources
- Huntington River crossings utilize existing bridge structures
- Directional borings implemented crossing State Highway 31
- Mine drainage diverted to Huntington Plant for consumptive use (partially offsets use of Huntington River in plant operations)
- Pipeline route maintains clearance from existing utility infrastructures (phone, electrical, culinary water lines, natural gas collection systems)

Permitting procedure - PacifiCorp committed to do the following:

- Submit SF-299 forms and Plan-of-Development (POD) to the BLM and USFS
- Retain an independent third party contractor to assist the federal agencies in preparation of the NEPA document
- Select an engineering firm to design the pipeline with experience with civil projects
- Submit road encroachment applications to Emery County and UDOT
- Request pipeline easements from private property owners
- Submit application to Division of Water Rights requesting Permanent Change Application for Rilda Canyon and Deer Creek Canyon portals for use in Huntington Plant operations
- Submit an application to DWQ for additional point source discharge , Deer Creek Mine Outfall (003), to allow for discharging mine water from Rilda Canyon directly to Huntington River outside the USFS /anti-degradation boundary
- Schedule meetings with UDOGM to discuss mine drainage permitting issues

Permitting Process:

- PacifiCorp submitted SF-299 forms and POD to BLM and USFS - May 11, 2016
- PacifiCorp contracted a third party environmental firm Jones & DeMille

Engineering to assist the BLM and USFS in preparation of the NEPA document

- PacifiCorp submitted road encroachment applications
  - UDOT Road Encroachment Permit
    - Submitted May 12, 2016
    - Approved/Amended November 11, 2016
  - Emery County Road Encroachment Permit
    - Submitted November 3, 2016
    - Approved December 21, 2016
- PacifiCorp submitted easement requests with private property owners
- PacifiCorp submitted application to Division of Water Rights requesting Permanent Change Application for Rilda Canyon and Deer Creek Canyon portals for use in Huntington Plant operations
  - Permanent Change Applications approved
    - Permanent Change Application Number 93-1115 (a41873) approved October 25, 2016
    - Permanent Change Application Number 93-3780 (a41874) approved November 10, 2016
- PacifiCorp submitted an application to DWQ for additional point source discharge , Deer Creek Mine Outfall (003), to allow for discharging mine water from Rilda Canyon directly to Huntington River outside the USFS /anti-degradation boundary
  - Submitted September 15, 2016

NEPA Process:

- Initial NEPA scoping – June 13, 2016
  - Issues Analyzed in EA Document based on public scoping:
    - Pipeline corridor:
      - Hydrologic issues
        - Potential impacts to wetlands and riparian resources
        - Water quality - acid mine drainage, elevated total iron, total dissolved metals
        - Use of mine water in plant operations
        - Water rights
      - Construction impacts
        - Sediment control and spill control prevention
        - Traffic control
        - Recreational impacts
      - Biological resources
      - Cultural resources
      - Visual resources
- Environmental Analysis (EA) completed - September 26, 2016 (refer to

Appendix E Deer Creek Mine Closure Water Pipeline UTU-91700 and PRI-1606 – Final Environmental Assessment)

- Draft Record of Decision (ROD) and Finding of No Significant Impact (FONSI) – September 26, 2016 (refer to Appendix E Deer Creek Mine Closure Water Pipeline UTU-91700 and PRI-1606 – Final Environmental Assessment)
- Public comment periods
    - BLM 30 day comment period September 27 - October 27, 2016
        - No public comments received
    - USFS 45 day Objection Response September 27 – November 14, 2016
        - Received objection response from Sierra Club/HEAL Utah

PacifiCorp evaluated the objection response submitted by Sierra Club/HEAL Utah and officially submitted a response to the governmental agencies on December 21, 2016. In essence, PacifiCorp stated "In reviewing those Objections, we've noted numerous issues and mischaracterizations that we believe warrant correction, clarification or elaboration. The attached Memorandum provides relevant background and context that we believe will be helpful as you consider the issues and assertions set forth in the Objections. As an example, PacifiCorp Response #1 (page 2) provides background and support to correct the Objectors' mistaken assertion that the power plant's Raw Water Pond was unlined; PacifiCorp Response #5 demonstrates that the Objectors' characterization of the intercepted groundwater as "acid mine drainage" is erroneous; PacifiCorp Responses #7, #9, #10, #11, #14 and #15 refute the Objectors' mistaken assertions that the EA failed to evaluate whether the eventual discharge of the intercepted groundwater into the power plant's Raw Water Pond for consumptive use would have adverse impacts on the water quality of Huntington Creek; etc.", refer to (refer to Appendix D Final Closure Plan – Sierra Club/HEAL Utah Objection Response December 21, 2016 for a complete assessment to the objection document).

*7) DOGM Pipeline Permitting Issues and Concerns:*

DOGM has been instrumental in Deer Creek's closure plans since the formal announcement on December 15, 2014. Involvement included:

- Hydrologic bulkhead site investigations and construction plans
- Environmental post closure inspections
- Geologic assessment of elevated total iron
- Interlocking Parallel Plug permit amendment
    - Independent hydrologic analysis

From the April 12, 2016 interlocking parallel plug amendment denial from UDOGM:

> "After spending considerable time reviewing RMP [Rocky Mountain Power] proposed mine closure and particularly the water retention design, the Division, in a routine phone

call with Mr. Russell Riley of MSHA on April 11, 2016 was told that his letter of December 1, 2015 had been interpreted incorrectly by you and also by the Division. He emphatically stated that the letter was intended as an unequivocal denial of the plan. He stated that under no circumstances could MSHA approve a water-retaining structure as part of mine closure plan. He asserted that the letter was referring to MSHA's lack of legal authority to approve a plan that requires water retention, not its jurisdictional authority to approve the closure plan. He affirmed that MSHA does have jurisdiction to review and approve mine closure plans and did not waive that jurisdiction for the RMP plan."

As stated earlier, MSHA will not allow any water retention as part of the Deer Creek closure plans; water must be directed to the portals to flow unimpeded out of the mine. This response by the agencies forces PacifiCorp to develop other alternatives to manage intercepted groundwater that would otherwise discharge from the Rilda Canyon portals in violation of UAC R317-2. Intercepted groundwater from the Mill Fork Area will be diverted to the Rilda Canyon 1st Right portals. To comply with this directive from MSHA and corresponding decision from DOGM, PacifiCorp initiated the process for permitting a pipeline corridor from the Rilda Canyon portals to the Huntington Plant.

Inclusion of the post mine gravity drainage/pipeline corridor within the permit boundary involves resolving several permitting issues (December 20, 2016 meeting with DOGM):

1. Amendment to the Deer Creek Mine permit to expand the permit boundary to include the pipeline corridor
2. Terminus end of the pipeline corridor – Inlet to the Huntington Raw Water pond.
3. Huntington Plant operation contingency plan
4. Potential third party interference issues/complying with DOGM regulations.
5. Bonding for performance and maintenance
6. Monitoring post closure mine hydrology
7. DWQ UPDES permit amendment modification – Outfall 003
8. Acknowledgement by DOGM that NEWUSSD is interested in the water source transported by the mine relief pipeline.

Explanation of and PacifiCorp's commitment to the issues outlined above:

1. Amendment to the Deer Creek Mine permit to expand the permit boundary to include the pipeline corridor:
    - PacifiCorp will amend the Deer Creek Mine permit boundary to include the pipeline corridor:
        - Width in general shall be 12 ft. for its entire length.

- An enlarged area for a potential treatment plant, approximately 250' x 250', will be permitted at terminus of the pipeline.
- PacifiCorp will provide DOGM with as-built metes and bounds description of the pipeline corridor

2. Terminus end of the permit boundary will not include Raw Water Pond at Huntington Plant. PacifiCorp committed to analyzing potential hydrologic impacts to the Raw Water Pond including the diversion of mine water. Based on the analysis provided in Appendix B and outlined below, the total amount of iron production (goethite, FeOOH) would be insignificant in comparison to the total sediment production (total suspended solids/natural sediment of Huntington River diverted to the Raw Water Pond):
    - Raw Water Pond Technical Details:
        - Date of Construction: 1972
        - Capacity: 336 acre feet
        - Pond liner: 2' of clay and silts compacted in 8" lifts to 98% density (ASTM D1557-70)
    - PacifiCorp analyzed the potential sediment and total iron contribution to the Raw Water Pond based on actual flow data and water quality analysis of Huntington River and Deer Creek Mine intercepted water (refer to Appendix D Final Closure Plan – Appendix D: Sediment/Goethite Production Huntington Plant Raw Water Pond). PacifiCorp contracted Peterson Hydrologic, LLC to evaluate the likely iron geochemistry behavior of Deer Creek Mine discharge waters blended with Huntington Creek waters in the clay-lined Raw Water Pond, including the likely characteristics and fate of the sediment that will likely be deposited in the Raw Water Pond (refer to Appendix D Final Closure Plan Sediment and Goethite Loading Report, Peterson 2017)
        - Based on sampling analysis Huntington Plant Diversion to Raw Water Pond sediment production varied from (Huntington River Diversion rates from 6,700 gpm to 9,700 gpm and average Huntington Creek Site HCC01, TSS 35 mg/L):
            - 1.4 to 2.0 tons/day
            - 0.70 to 1.01 $yard^3$/day
            - 254 to 367 $yard^3$/year
        - Based on sampling analysis of Deer Creek intercepted groundwater production from $11^{th}$ – $17^{th}$ West projected goethite production would yield ($11^{th}$ – $17^{th}$ West flow rate of 300 gpm, total iron of 1.3 mg/L):
            - 0.004 tons/day

- 0.0010 yard$^3$/day
- 0.3794 yard$^3$/year

- Total sediment production equates to 99.85% to 99.90% of the total contribution of sediment from Huntington Creek and 0.1% to 0.15 % from projected goethite in the mine water.

- Any cleaning of the raw water pond will be the responsibility of Huntington Plant, where pond cleanings will be disposed of in a state approved landfill.

3. Huntington Plant operation contingency plan:
   - If Huntington Power Plant is taken off line indefinitely for any reason and mine discharge water is not in compliance with the water quality numeric criteria determined by DEQ, a treatment facility will be constructed and compliant water will be discharged into Huntington Creek under the jurisdiction of the Division of Water Quality (DEQ) - Deer Creek UPDES permit.
4. Potential third party interference issues/complying with DOGM regulations.
   - Acknowledgement by DOGM that the pipeline/permit corridor is a multiple use area over which PacifiCorp has no control (recommended permit conditions):
     - Pipeline right-of-way (area to be permitted) is within previously disturbed, existing rights-of-way.
     - Pipeline right-of-way is completely exposed to traffic, elements, third party interferences, etc.
     - No way to control external activities that might affect pipeline infrastructure.
     - No way to fence off or limit access to pipeline.
     - No way to mark or put permit signage along pipeline.
5. Bonding for performance and maintenance:
   - PacifiCorp has secured performance and maintenance bonds from Emery County (Road 306) and State of Utah Department of Transportation (State Road 31)
6. Monitoring post closure mine hydrology:
   - The water quality of mine discharge shall be sampled at least monthly and analyzed for compliance with DEQ water quality numeric criteria and submitted to DOGM quarterly.
   - In the event of Number 3, a reclamation surety shall be provided to DOGM for the constructed treatment facility operation and its reclamation until the conditions in Number 3 are met.
   - If the mine discharge water quality falls within the range of numeric criteria determined by DEQ for six straight months (6-month running average), water may be discharged into the Huntington Creek under a UPDES permit or

transferred to NEWUSSD. Permit reduction procedures shall commence and DOGM shall relinquish jurisdiction.

7. DWQ UPDES permit amendment modification – Outfall 003 Submitted September 15, 2016
    - PacifiCorp has collected hundreds of samples documenting the quality of the intercepted groundwater at the Deer Creek Mine. Samples collected by PacifiCorp are analyzed by a third party, State Certified Laboratory. Analysis of the water resources includes not only solute constituents documenting the geochemical nature of the groundwater, but in addition whole effluent testing has been used to verify that the groundwater discharge is not detrimental to aquatic life. All water, whether surface or groundwater, includes minor amounts of constituents which contribute to the overall chemistry of the water. Levels of these constituents depend upon the hydrogeologic setting and interaction of the groundwater and the geologic formations from which it derives. To assist State of Utah Division of Water Quality (DWQ) in reviewing of PacifiCorp's revised UPDES permit application for a new outfall (003), PacifiCorp amended and expanded water quality analysis test procedures of the intercepted groundwater to comply with the EPA Form 2C requirements. PacifiCorp continues to sample and analyze the intercepted groundwater at Deer Creek, and to provide the detailed results to multiple governmental agencies.
    - The following table compares the numeric standards established by the State of Utah (Table 2.14.2 – Numeric Criteria for Aquatic Wildlife 3C – Huntington Creek) to analyses of groundwater intercepted in the Deer Creek Mine projected to be discharged at Rilda Canyon Portals. As demonstrated in this table, the projected water quality discharged from the mine exceeds (is in compliance with) the Numeric Criteria for Aquatic Wildlife 3C – Huntington Creek.

| Parameter | State of Utah<br>Utah<br>Administrative Code<br><br>Standards of Quality for Waters of the State Rule R317.2<br><br>Table 2.14.2<br>*Numeric Criteria for Aquatic Wildlife 3C – Huntington Creek* | Deer Creek Mine Intercepted Groundwater Projected Discharge at Rilda Canyon Portals Note 1 |
|---|---|---|
| **pH (units)** | 6.5 – 9.0 | 7.38 |
| **Aluminum, ug/L (dissolved)<br>(1 hour average)** | 750 | 50<br>Detected in three out of the six samples |
| **Arsenic, ug/L (total)<br>(1 hour average)** | 340 | ND<br>Lab reporting limit 10 |
| **Cadmium, ug/L (total and dissolved)<br>(1 hour average)** | 2.0 | ND<br>Lab reporting limit 1 |
| **Chromium, ug/L (total)<br>(1 hour average)** | 16 | 3.6<br>Six samples analyzed |
| **Copper, ug/L (total and dissolved)<br>(1 hour average)** | 13 | ND<br>Lab reporting limit 10 |
| **Lead, ug/L (total and dissolved)<br>(1 hour average)** | 65 | ND<br>Lab reporting limit 10 |
| **Mercury, ug/L (total)<br>(4 day average)** | 0.012 | ND<br>Lab reporting limit <0.2<br>Six samples analyzed |
| **Nickel, ug/L (total)<br>(1 hour average)** | 468 | 34.6<br>Five samples analyzed |
| **Selenium, ug/L (total)<br>(1 hour average)** | 18.4 | ND<br>Lab reporting limit <2 |
| **Silver, ug/L (total)<br>(1 hour average)** | 1.6 | ND<br>Lab reporting limit <2 |
| **Zinc, ug/L (total and dissolved)<br>(1 hour average)** | 120 | 28.5<br>Detected in two out of the seven samples |
| Sample period represents the last six months of sampling from 11th – 17th West sealed area<br>Note 1: Samples collected from 11th – 17th West discharge<br>ND: Not Detected | | |

- Alteration of the existing water chemistry in the Huntington Plant Raw Water Pond will be insignificant. In terms of total dissolved solids (TDS), introduction of the mine water will cause the overall TDS of the Raw Water Pond to increase from approximately 5 mg/L to 18 mg/L (mg/L – parts/million) depending on the rate of Huntington River diversion and volume of mine water diverted to the Raw Water Pond.

Data Transmitted to the USFS (8/1/2016)
Water Diversion Total Dissolved Solids Mass Balance Calculation
Huntington Creek 7,000 to 11,000 gpm (93 to 98% of total diversion)
Deer Creek Mine – Rilda Canyon 200 – 500 gpm (2 to 7% of total diversion)
Projected Huntington Power Plant Intake Water Quality (Cooling Towers): TDS (mg/L) Values

Average Huntington Creek Diversion (7,000 gpm) with Mine Water varying from 200 to 500 gpm
Total diversion 7,000 gpm (Huntington Creek @ 6,500 gpm, Mine Water @ 500 gpm)
Total Dissolved Solids 262 mg/L Change in TDS: Increase of 18 mg/L
Total diversion 7,000 gpm (Huntington Creek @ 6,800 gpm, Mine Water @ 200 gpm)
Total Dissolved Solids 251 mg/L Change in TDS: Increase of 7 mg/L

High Huntington Creek Diversion (11,000 gpm) with Mine Water varying from 200 to 500 gpm
Total diversion 11,000 gpm (Huntington Creek @ 10,600 gpm, Mine Water @ 500 gpm)
Total Dissolved Solids 255 mg/L Change in TDS: Increase of 11 mg/L
Total diversion 11,000 gpm (Huntington Creek @ 10,800 gpm, Mine Water @ 200 gpm)
Total Dissolved Solids 248 mg/L Change in TDS: Increase of 5 mg/L

The maximum increase in TDS in the Huntington Power Plant cooling towers is projected to be an increase of 18 mg/L.

- Huntington Plant water usage operation systems will remain constant
  - The Deer Creek Mine water supply has an increased TDS concentration when compared to the Huntington Creek supply; however, the Huntington plant cooling tower circulating water quality is controlled through a water treatment process such that the TDS concentration of the circulating water will not be affected by the use of the supplemental Deer Creek Mine supply. In essence, although the fraction of the make-up water supply to the Huntington cooling tower circulating water system from the Deer Creek Mine will have an increased TDS concentration as compared to the Huntington Creek water supply, the cooling tower circulating water system will be controlled to maintain the current (a consistent) TDS concentration. This means that the overall chemistry in terms of TDS of the water used in the plant operations and ultimately diverted to the Huntington Plant Irrigation Reservoir will remain constant. Use of the mine water will not alter the current irrigation system used at the plant

8. Acknowledgement by DOGM that NEWUSSD is interested in the water source transported by the mine relief pipeline.
   - North Emery Water Users Special Service District (NEWUSSD) Board has voted to pursue pipeline and water when water is in compliance.
   - NEWUSSD may use pipeline for Rilda Springs flow as well.
   - NEWUSSD will need access and control of pipeline and valves up to the Rilda portals (into the reclaimed disturbed area of Rilda Canyon facilities until Phase III bond release).

- PacifiCorp will deed the pipeline corridor in its entirety and water to NEWUSSD and remove from permit area with bond release or permit reduction.

*8) Potential Post Mine Closure Interbasin Transfer:*

Because the ~~permit~~ lease area is divided between the Huntington Creek Drainage Basin and the Cottonwood Creek Drainage Basin, seventy percent and thirty-percent, respectively, the amount of interbasin water transfer that occurs must be considered. PacifiCorp ~~will~~ installed seals as a mitigation effort to minimize interbasin transfer. The average annual flows of Huntington and Cottonwood creeks are 96.3 and 95.1 cfs, respectively (USGS Open File reports #81539 and #81141). The historical ~~current~~ discharge rate from PacifiCorp's ~~total permit areas~~ Utah mines range~~s~~ from 1000 to 1500 gpm, less than three and one half percent of either of the creeks' average flows. Post mine closure estimated discharge <300 gpm is less than one percent of either of the creeks' average flow. Because a limited portion of the projected Mill Fork ~~permit~~ Area mine workings (less than thirty percent) intersects water that would normally migrate toward the Cottonwood Basin but is discharged out Deer Creek Canyon, the interbasin water transfer from the Cottonwood drainage to Huntington Creek will probably never exceed one percent (<1%) of the average annual discharge of either system.

## R645-301-729 CUMULATIVE HYDROLOGIC IMPACT ASSESSMENT (CHIA)

The Division will provide an assessment of the probable cumulative hydrologic impacts of the proposed coal mining and reclamation operation and all anticipated coal mining and reclamation operations upon surface and groundwater systems in the cumulative impact area.

# R645-301-730 OPERATION PLAN

## R645-301-731. GENERAL REQUIREMENTS

PacifiCorp has submitted a plan to minimize disturbance to the hydrologic balance, to prevent material damage, and to support approved postmining land use (see Operational and Reclamation plan for the Deer Creek Mine).

## R645-301-731.100. HYDROLOGIC BALANCE PROTECTION

### A. GROUNDWATER PROTECTION

Although the analysis of the overburden samples tested has shown that no toxic or hazardous materials are present, groundwater quality will be protected by handling earth materials and runoff in a manner that minimizes infiltration to the groundwater system.

### B. SURFACE WATER PROTECTION

Surface water quality will be protected by handling earth materials, groundwater discharges, and runoff in a manner that minimizes the potential for pollution.

## R645-301-731.200. WATER MONITORING

### A. GROUNDWATER

Groundwater within the Mill Fork ~~permit~~ Area will be monitored according to the schedules in Appendix A. PacifiCorp has conducted baseline and operational monitoring of spring sources in and adjacent to the ~~permit~~ lease area. ~~The springs located within or immediately adjacent to areas overlying coal to be mined in the next five (5) years or areas overlying previously mined areas will be monitored.~~ The data collected have provided information useful in the understanding of potential hydrologic consequence of mining.

1. East Mountain Springs - Mill Fork

In preparation for coal leasing, Genwal Resources conducted baseline spring and seep surveys from 1994-1996 (northern portions of the lease were surveyed in 1989-90). With PacifiCorp's acquisition of the Mill Fork State Coal Lease (reverted to the BLM on August 1, 2011 and designated as federal lease UTU-88554), a complete re-evaluation of groundwater resources was initiated in 2000 and continued through 2001. During the 2000-2002 baseline evaluation, a total of 198 springs were identified within and adjacent to the ~~permit~~ lease plan area. Each spring site on East Mountain has been studied to determine the geologic circumstances that cause the springs to occur. The mode of occurrence for each spring has been tabulated on the "Springs Geologic Conditions Inventory" sheets located in Appendix C. The springs on East Mountain originate in several different ways (see Table MFHT-1 and Mill Fork Spring Map MFS1830D); however, many springs share the same mode of occurrence and, in some cases, are related.

The ground water monitoring plan in Appendix A includes a selection of springs based on the following criteria:

- Stratigraphic position
- Area of potential influence from subsidence
- Aerial distribution
- Established water rights

- Measurable flow based on historical surveys
- Reliable measuring point(s)

The following table outlines the rationale for springs selected for long term monitoring. Selection of the springs to be monitored was based upon the factors listed along with discussions with the water users (CVSSD, Emery Conservancy District, NEWU~~A~~SSD) and the surface management agency.

| MILL FORK GROUNDWATER MONITORING PLAN - SPRINGS | | | | | | | |
|---|---|---|---|---|---|---|---|
| **Spring** | **Stratigraphic Position** | **Projected Subsidence Zone** | **Regional Location** | **Water Rights** | **Historical Measurable Flow** | **Reliable Measuring Point** | **Comment** |
| EM-216 | ✓ | | ✓ | ✓ | ✓ | ✓ | Located outside projected zone of subsidence |
| EMPOND | | | | | ✓ | ✓ | Added to the spring monitoring program at the request of the USFS |
| GRANTS SPRING | | | | | ✓ | ✓ | Added to the spring monitoring program at the request of the USFS |
| LITTLE BEAR SPRING | ✓ | | ✓ | ✓ | ✓ | ✓ | Located outside projected zone of subsidence. Added to the spring monitoring program at the request of the DOGM |
| JV-9 | ✓ | | ✓ | | | ✓ | Located outside projected zone of subsidence. Monitored to detect impacts to the Joes Valley alluvium |
| JV-34 | ✓ | | ✓ | | | ✓ | Located outside projected zone of subsidence. Monitored to detect impacts to the Joes Valley alluvium |
| MF-7 | ✓ | | ✓ | | ✓ | ✓ | Located outside projected zone of subsidence |
| MF-10 | ✓ | ✓ | ✓ | ✓ | ✓ | ✓ | |
| MF-19B | ✓ | | ✓ | ✓ | ✓ | ✓ | |
| MF-213 | ✓ | | ✓ | ✓ | ✓ | ✓ | Large spring located in the Blackhawk Formation downdip from projected mining |
| MF-219 | ✓ | ✓ | ✓ | ✓ | ✓ | ✓ | |
| MFR-10 | ✓ | ✓ | ✓ | | ✓ | ✓ | Large spring denoted by USGS |
| MFR-30 | ✓ | ✓ | ✓ | | ✓ | ✓ | |
| RR-5 | ✓ | ✓ | ✓ | ✓ | ✓ | ✓ | |
| RR-15 | ✓ | ✓ | ✓ | | ✓ | ✓ | |
| RR-23A | ✓ | | ✓ | | ✓ | ✓ | Large spring within a series of springs located downdip from projected mining |
| SP1-26 | ✓ | ✓ | ✓ | ✓ | ✓ | ✓ | |
| SP1-29 | ✓ | ✓ | ✓ | | ✓ | ✓ | |
| UJV-101 | ✓ | | ✓ | | ✓ | ✓ | |
| UJV-206 | ✓ | ✓ | ✓ | ✓ | ✓ | ✓ | |

Water samples will be collected and analyzed during the months of July and October. Parameters analyzed are those listed in the "DOGM Guidelines for Groundwater Water Quality" (see Appendix A – Monitoring Locations – Groundwater – East Mountain Springs – Mill Fork Area). Monitoring of groundwater sites will continue for a minimum of three years after the last date of mining (date of last mining - January 2015). PacifiCorp will submit a formal application to reduce hydrologic monitoring after the minimum three year time period.

2. In-Mine

Monitoring of in-mine water sources was terminated after mine sealing completed April 2015. Historically, intercepted groundwater sampling sites, (either roof drippers or contribution from the floor), ~~will~~ were ~~be~~ established according to the Special Condition Stipulation in the Deer Creek permit renewal, (February 6, 1996); "*If during entry development, sustained quantities of groundwater are encountered which are greater than 5 gpm from a single source in an individual entry, and which continue after operational activities progress beyond the area of groundwater production, PacifiCorp must monitor these flows for quality and quantity under the approved monitoring plan".* ~~In addition to the standard plan described above, if mining encountered significant quantities of groundwater which issues from a fault zone, PacifiCorp will; quantify the volume, sample for water quality according to the approved monitoring plan (baseline parameters for two year period), conduct isotopic sampling using a systematic approach (phase 1: tritium analysis, phase 2: depending the results of the tritium sampling, perform carbon age dating). Parameters analyzed are those listed in the "DOGM Guidelines for Groundwater Water Quality" (see Appendix A).~~

## B. SURFACE WATER

PacifiCorp has conducted baseline monitoring of surface waters within and adjacent to the Mill Fork ~~permit~~ Area. Water samples will be collected and analyzed as outlined in Appendix A. Parameters analyzed are those listed in the "DOGM Guidelines for Surface Water Quality." Locations of all surface monitoring sites and sampling schedules can be found in Appendix A.

## R645-301-731.500. DISCHARGES

Refer to Mine Dewatering R645-301-721 and UPDES information in Volume 9 Appendix B.

## R645-301-731.520. GRAVITY DISCHARGES from UNDERGROUND COAL MINING AND RECLAMATION ACTIVITIES

Interception of groundwater in the Mill Fork area necessitated PacifiCorp to design post closure structures to prevent unapproved discharge from occurring at the Rilda Canyon 1st Right Portals. Groundwater intercepted from the Mill Fork mined out areas would naturally gravity flow along the mine entries from the Mill Fork east towards the Rilda Canyon and eventually to the lowest elevation portals – Rilda Canyon 1st Right portals. With the announcement of the Deer Creek Mine closure in December of 2014, PacifiCorp

designed and applied for mine closure approval from various government agencies to prevent a prohibited post-mine gravity discharge of water from the portals located in Rilda Canyon.

The original preferred plan was to build water-retaining bulkheads to contain all of the intercepted groundwater in the underground mine workings in perpetuity. Efforts undertaken since late 2014 to obtain permission from the Mine Safety and Health Administration (MSHA) and the UDOGM to permanently retain intercepted groundwater underground with concrete bulkheads and possibly to direct overflow water to the Deer Creek Canyon were rejected in April of 2016.

As outlined in the Probable Hydrologic Consequence section (R4645-301-728), MSHA will not allow any water retention as part of the Deer Creek closure plans; water must be directed to the portals to flow unimpeded out of the mine. This response by the agencies forces PacifiCorp to develop other alternatives to manage intercepted groundwater that would otherwise discharge from the Rilda Canyon portals in violation of UAC R317-2. Intercepted groundwater from the Mill Fork Area will be diverted to the Rilda Canyon 1st Right portals. To comply with this directive from MSHA and corresponding decision from DOGM, final reclamation plans for Deer Creek will include a buried pipeline from the Rilda Canyon 1st Right portals to the Huntington Plant Settling Pond (see Volume 11 Engineering Section complete details of the Rilda Canyon 1st Right portal reclamation plans). Hydrologic monitoring of the mine discharge will include the gravity outfalls at Deer Canyon (UPDES Permit #UT0023064-002) and mine water diverted through pipeline to the Huntington Power Plant Settling Pond. Water diverted to the Huntington Power Plant will be used in plant operations and will not require reporting through the UPDES system (June 14, 2016 meeting with DWQ).

## R645-301-731.300. ACID AND TOXIC-FORMING MATERIALS

Acid-forming materials in western coal mines generally consist of sulfide minerals, which, when exposed to air and water, are oxidized causing the production of $H^+$ ions (acid). The sulfide mineral pyrite ($FeS_2$) has been identified in the PacifiCorp mines. Although the oxidation of pyrite occurs in the mine, acidic waters are not observed in the mine. The acid is quickly consumed by dissolution of abundant, naturally occurring carbonate minerals (refer to Appendix B Eqs. 3 and 4). Iron is readily precipitated as iron-hydroxide and excess iron is not observed in the mine discharge water.

## R645-301-731.530. State Appropriated Water Supply

PacifiCorp commits to comply with R645-301-731.530, which states: "The permittee will promptly replace any State-appropriated water supply that is contaminated, diminished or interrupted by UNDERGROUND COAL MINING AND RECLAMATION ACTIVITIES conducted after October 24, 1992, if the affected water supply was in existence before the date the Division received the permit application for the activities causing the loss, contamination or interruption. The baseline hydrologic and geologic information required in R645-301-700. will be used to determine the impact of mining activities upon the water supply". PacifiCorp has conducted baseline hydrologic monitoring to determine pre-mining hydrologic resources (refer to Appendix C). Ground and surface water monitoring programs have been designed to specifically to monitor potential impacts associated with mining in the Mill Fork ~~permit~~ Area. Table MFHT-2 list the ground and surface water rights within and adjacent to the Mill Fork ~~permit~~ Area. In addition, Table MFHT-2 list the quantity of the water rights within the projected affected area, and the observed flows collected during the baseline surveys and mitigation alternatives. Quality of the State Appropriated Water Supplies are reported in Appendix C.

## R645-301-731.600. STREAM BUFFER ZONES

Mining related activities will not occur within 100 feet of a perennial or intermittent streams unless the Division authorizes such activities.

## R645-301-731.700. CROSS SECTION AND MAPS

731.710-720 and 750: A water supply intake system known as "North Emery Water Users Association Special Services District - Rilda Canyon Springs" is located in Section 28, Township 16 South, Range 7 East (refer to Volume 9 Map HM-9, a detailed drawing of the collection system is provided in Volume 9 - Hydrologic Section Map HM-8). The intake system consists of a series of French drains collecting near surface alluvial water as a supply source for culinary water (for complete description of the NWEUASSD system refer to Volume 9 R645-721 "Existing Groundwater Resources").

Mine Sites: All disturbed area drainage will flow into an approved sediment control device. Maps showing water diversion, collection, conveyance, treatment, storage, and discharge can be found in the Operational section of the Deer Creek Mine PAP.

730: Water Monitoring Location Map - Refer to Hydrologic Map MFS1851D.

## R645-301-731.800. WATER RIGHTS AND REPLACEMENT

In order to fulfill the requirements to restore the land affected by applicant's mining operations to a condition capable of supporting the current and postmining land uses stated herein, the applicant will replace water determined to have been lost or adversely affected as a result of applicant's mining operations if such loss or adverse impact occurs prior to final bond release. The water will be replaced from an alternate source in sufficient quantity and quality to maintain the current and postmining land uses (refer to Table MFHT-2 for a list of State Appropriated Water Supplies; including; type, quantity (water right and baseline observations) and quality references.

Nine springs have been developed in Huntington Canyon to provide for domestic, industrial, and commercial water needs. Currently, Huntington City utilizes two springs in Huntington Canyon, Big Bear Canyon Spring and Little Bear Canyon Spring. The North Emery Water Users ~~Association~~ Special Services District also utilizes springs in Huntington Canyon to provide for domestic and industrial water needs in areas outside of Huntington City. The ~~Association~~ NEWUSSD is currently utilizing water from three springs in Rilda Canyon as well as from four other springs in the general area (refer to Volume 9 Hydrologic Section: Map HM1).

1. North Emery Water Users ~~Association~~ Special Services District

Of concern to PacifiCorp is the proximity of proposed mining activities in Rilda Canyon to the Rilda Canyon Springs which currently serve as a culinary water source to the North Emery Water Users ~~Association~~ Special Services District (NEWU~~A~~SSD) serving some 410 connections. Due to the importance of these springs, a separate discussion is provided in Volume 9 Hydrologic Section.

2. Little Bear Spring

A second spring system which has been developed for culinary purposes referred to as Little Bear Spring occurs east of the Mill Fork ~~permit~~ Area. Little Bear Spring is a large spring (average flow of approximately 300 gpm) which issues from the lowest member of the Star Point Sandstone (Panther Member) located approximately one and one half (1 ½) miles to the east of the Mill Fork ~~permit~~ Area boundary in Section 9, Township 16 South, Range 7 East (refer to Groundwater Rights and Users for complete hydrologic characteristics related to Little Bear Spring). PacifiCorp cooperated with Huntington City, Elmo City, Cleveland City and CVSSD in developing a comprehensive mitigation plan. The agreement was signed on July, 2004. As part of the agreement, PacifiCorp constructed a water treatment plant in 2005 located near at the existing Huntington City plant in Huntington Canyon. The mitigation agreement information is found in Appendix D of Volume 9.

## R645-301-732 - 764. SEDIMENT CONTROL

Information pertaining to sediment control can be found in the Operational plan of the Deer Creek Mine PAP.

## R645-301-748, 755, 765. CASING AND SEALING OF WELLS

Each water well will be cased, sealed, or otherwise managed, as approved by the Division.

## R645-301-751. WATER QUALITY STANDARDS AND EFFLUENT LIMITATIONS

Discharges of water from areas disturbed by coal mining and reclamation operations will be made in compliance with all Utah and federal water quality laws and regulations and with effluent imitations for coal mining promulgated by the EPA set forth in 40CFR Part 434 (refer Volume 9 Appendix B for UPDES permit information).

## R645-301-760. RECLAMATION

As outlined in the Probable Hydrologic Consequence section (R4645-301-728), MSHA will not allow any water retention as part of the Deer Creek closure plans; water must be directed to the portals to flow unimpeded out of the mine. This response by the agencies forces PacifiCorp to develop other alternatives to manage intercepted groundwater that would otherwise discharge from the Rilda Canyon portals in violation of UAC R317-2. Intercepted groundwater from the Mill Fork Area will be diverted to the Rilda Canyon 1st Right portals. To comply with this directive from MSHA and corresponding decision from DOGM, final reclamation plans for Deer Creek will include a buried pipeline from the Rilda Canyon 1st Right portals to the Huntington Plant Settling Pond (see Volume 11 Engineering Section for complete details of the Rilda Canyon 1st Right portal reclamation plans). Hydrologic monitoring of the mine discharge will include the gravity outfalls at Deer Canyon (UPDES Permit #UT0023064-002) and mine water diverted through pipeline to the Huntington Power Plant Settling Pond. Water diverted to the Huntington Power Plant will be used in plant operations and will not require reporting through the UPDES system (June 14, 2016 meeting with DWQ).

# PacifiCorp

# Deer Creek Mine

# C/015/0018

**Amendment to Add a Post-Mining Water Discharge at Rilda Canyon Portals, Permit Area Change to Include Discharge Pipeline Route and Potential Treatment Facility Area, PacifiCorp, Deer Creek Mine, C/015/0018, Emery County, Utah**

**<u>Volume 12, R645-301-700 Hydrology, Appendix D</u>**

**Add Appendix D**

# DEER CREEK MINE

# VOLUME 12

# MILL FORK LEASE

## R645-301-700

## HYDROLOGY

# APPENDIX D

### POST MINE CLOSURE HYDROLOGIC ANALYSIS

- **Geochemical Evaluation of Groundwater with Elevated Iron (Mayo & Associates, 2015)**

- **Potential for Acid Mine Drainage (Peterson Hydrologic, 2016)**

- **Iron Blending Sensitivity Analysis**
  - **Base Case 11th – 17th West**
  - **Base Case at Raw Water Pond @ 7,000 gpm Diversion**
  - **Base Case at Raw Water Pond @ 3,500 gpm Diversion**
  - **11th – 17th West and 7th North Total Iron Blending**
  - **Base Case at Raw Water Pond @ 7,000 gpm Diversion**
  - **Base Case at Raw Water Pond @ 3,500 gpm Diversion**

- **Sediment/Goethite Production Huntington Plant Raw Water Pond**
  - **Sediment Load**
  - **Goethite Load from Mine**
  - **Sediment Load versus Goethite Production**

- **7th North Sump Discharge January 2016 through December 2016**

- **Deer Creek In-Mine Sealed Area Water Quality Analysis: 2012 – 2016**

- **Deer Creek In-Mine Sealed Area Water Quality Graphs: 2012 - 2016**

- **Huntington Creek HCC01 Water Quality Analysis 1990 – 2016**

- **Sierra Club/HEAL Utah Objection Response December 21, 2016**

- **Sediment and Goethite Loading Report (Peterson, 2017)**

# DEER CREEK MINE

# VOLUME 12

# MILL FORK LEASE

**R645-301-700**

**HYDROLOGY**

# APPENDIX D

**POST MINE CLOSURE HYDROLOGIC ANALYSIS**

- **Geochemical Evaluation of Groundwater with Elevated Iron (Mayo & Associates, 2015)**

# Mayo and Associates, LC
# Consultants in Hydrogeology

710 East 100 North • Lindon, Utah 84042 • (801) 472-3139


## Deer Creek Mine – Mill Fork Area

## Geochemical Evaluation of Groundwater with Elevated Iron

April 26, 2014

Energy West Mining Company
P.O. Box 301
15 North Main Street
Huntington, Utah 84528


Prepared by
Alan L. Mayo, Ph.D. PG, PH

Mayo and Associates, LC

# Table of Contents

1. Introduction ..... 1
2. Setting ..... 2
3. High Sulfur Zones ..... 2
4. Groundwater Discharge ..... 4
5. Geochemistry of Mill Fork Area Groundwater ..... 4
5.1 Dissolved and Total Iron ..... 5
5.2 Dissolved Sulfate ($SO_4^{2-}$) ..... 6
5.3 Iron Hydroxide Precipitate ..... 6
5.4 Sulfur Isotopes ..... 7
5.5 Chemical Reactions ..... 7
5.5.1 Major Ions ..... 8
5.5.2 Pyrite – Marcasite Dissolution ..... 12
5.5.3 Solubility Controls ..... 13
5.6 In-Mine Factors Controlling $SO_4^{2-}$ and Iron Concentrations Due To Oxidizing/Reducing Conditions and Dissolved Oxygen ..... 14
5.7 Oxidized Sulfur and Elevated Mg Concentrations ..... 16
6 Estimated soluble iron sulfide in the Mill Fork Area ..... 17
7 Other Potential Sources of Iron ..... 18
8 Long-term Impacts of Iron Sulfide Mineral Dissolution on In-mine Water ..... 18
8.1 Open System Conditions ..... 19
8.2 Closed System Conditions ..... 20
9 Not Included In This Investigation ..... 21
10 Conclusion ..... 21
11 References Cited ..... 23

# List of Figures

Figure 1 Deer Creek Mine hydrogeologic map. ..... 24
Figure 2 Distribution of iron-sulfide mineralization in Hiawatha seam mine floor workings in the Mill Fork Area. ..... 25
Figure 3 Distribution of iron-sulfide mineralization in Hiawatha seam vertical surfaces. ..... 26
Figure 4 Temporal variation in: a) total iron and b) $SO_4^{2-}$ concentrations in Mill Fork Area groundwater discharges ..... 27
Figure 5 Results of in mine oxidation experiment of 17th West seals groundwater. ..... 28
Figure 6 Stability diagram showing the relationship between dissolved ferric and ferris iron and iron hydroxide precipitate (goethite). ..... 29

# List of Tables

Table 1 Results of periodic sampling of Mill Fork Area solute compositions……...30
Table 2 Calculated tons of sulfur and iron sulfide minerals in the high sulfur zones that may contact groundwater…….…….…….31
Table 3 Major iron compositions of and Saturation Indices (SI) of Mill Fork Area groundwaters……..32
Table 4 Stable isotopic compositions of dissolved sulfur and water …….....……...33
Table 5 Equilibrium constants and solubility of selected minerals of interest……...……34
Table 6 Gas composition of the atmosphere behind the 17th West seal and the average composition of the atmosphere……...34
Table 7 Summary of field and laboratory dissolved oxygen……..35
Table 8 Summary of leaching experiments ……..35

# Deer Creek Mine – Mill Fork Area

# Geochemical Evaluation of Groundwater with Elevated Iron

## 1. Introduction

Energy West Mining Company (Energy West) anticipates closing the Deer Creek Mine as early as November 2014. Hiawatha Seam workings in the Mill Fork Area have encountered a north-south trending zone of coal that contains elevated sulfur concentrations. Groundwater discharges at a rate of about 1,000 gallons per minute (gpm) from the Mill Fork area and this water has elevated concentrations of total iron in the form of ferric hydroxide (goethite) which is observable as a yellow precipitate. This groundwater is used for in mine process purposes, however upon mine closure the water will discharge to the surface via the Rilda Canyon portals unless corrective actions are taken.

The North Emery Water Users Special Services District (NEWUSSD) collects culinary water from three springs in the portals area. The discharge of mine water containing ferric hydroxide precipitate will have a negative impact on the NEWUSSD water supply as well as surface water in Rilda Canyon. Energy West has requested Mayo and Associates to undertake a chemical evaluation of the fate of the groundwater containing elevated iron. Specifically we have been tasked to:

1. Review hydrologic data from the adjacent Crandall Canyon Mine.
2. Assess the geochemical evolution of intercepted groundwater and the chemical alteration of groundwater within sealed areas in the Hiawatha Seam – Mill Fork Area.
3. Project geochemical long term trends of groundwater from sealed areas during mining, and after mining and sealing are complete.
4. Evaluate mitigation options to control elevated iron groundwater discharge.

## 2. Setting

Coal is mined from the Hiawatha and the overlying Blind Canyon seams in the Deer Creek Mine. The mine consists of several separate mining areas. Of interest to this investigation is the Mill Fork Area (Figure 1). The Mill Fork Area is connected to other Deer Creek mining areas via the 2.6 mile long Mill Fork Access and Rilda Canyon break-out portals both of which are completed in the Hiawatha seam. In the Mill Fork Area the longwall panels trend east-west and are bounded to the west by the Joes Valley Fault and to the north by the Crandall Canyon mine workings. Barriers of unmined coal separate the longwall panels from both the Joes Valley Fault and the Crandall Canyon mine workings. A northeast trending anticlinal structure with gentle dips causes the western portion of the mine floor to slope toward the Joes Valley Fault and the eastern portion to slope toward the east.

Active mining is occurring in the Hiawatha seam in the northern portion of the Mill Fork Area. In the tract, the western most portions of the mined out 12$^{th}$ to 17$^{th}$ West and the 21$^{st}$ to 23$^{rd}$ West longwall panels are flooded due to the slight westward dip of the bedrock. Groundwater from the active mining area and the eastern portions of the tract flow to the east and are collected at the 10$^{th}$ North, 17$^{th}$ West, and 11$^{th}$ West sumps (Figure 1). Groundwaters collected in the sumps have contact with the zones of coal that contain elevated sulfur concentrations and the discharge water has elevated concentrations of total iron (Table 1).

## 3. High Sulfur Zones

In the Mill Fork Area the primary elevated sulfur zone in the Hiawatha seam is 1,500 to 2,000 feet wide, 2 miles long and trends approximately north-south (Figure 2). Much of the coal in this zone has been removed by mining of the 12$^{th}$ to 23$^{rd}$ West panels; however, coal containing

elevated sulfur remains in the mine floor, unmined supporting pillars, and in the unmined portions 24th to 27th West panels. A smaller high sulfur zone occurs in the mostly flooded portion of the mined 12th to 23rd West panels area (Figure 2). This high sulfur zone extends into the adjacent Crandall Canyon mine, which since early 2008 has discharged about 500 gpm of groundwater containing total iron concentrations in excess of 1 mg/L (Peterson Hydrologic, 2011).

The percentage of sulfur in the coal in the high sulfur zone ranges between 0.5 and 10% and has an average value of 5.75%. This compares with the average Deer Creek mine sulfur content of 0.5%. Sulfur in coal may be in oxidized, reduced, and native forms. Oxidized sulfur includes minerals such as gypsum ($CaSO_4.nH_2O$) and anhydrite ($CaSO_4$) which form in evaporative environments and as secondary mineralization. Sulfur can also be the results of precipitation from sea water that flooded peat swamps (Chou, 1997). Such sulfur may be in a highly soluble form such as $MgSO_4 \bullet 7H_20$ (epsomite). Reduced forms include iron sulfide minerals such as pyrite and marcasite ($FeS_2$). Native sulfur (S) has also been report in some coals. The concentration of oxidized and reduced sulfur minerals in the high sulfur zones are described below.

The calculated total sulfur in the high sulfur zones that may potentially interact with groundwater is 31,961 tons (Table 2). The total sulfur in the high sulfur zones exceeds 50,000 tons (Figures 2 and 3). The calculated amount of sulfur that may potentially react with groundwater is based on the following assumptions:

1. The average sulfur concentration in the high sulfur zones is 5.75%.
2. Groundwater may interact with sulfur in mine areas to a depth of 2 feet from exposed mine floor and vertical surfaces. Unmined coal beyond the 2 foot exposed surfaces contains non-available sulfur.
3. Calculations of total sulfur do not include potential sulfur that occurs in collapsed gob coal and other rocks from the mine roof.

Separate calculations have been made for the amount of available sulfur in the mine floor and in

the mine vertical surfaces (Table 2; Figures 2 and 3, respectively). In the table, calculated amounts are summarized for both the flooded and non-flooded portions of the Mill Fork Area that may interact with groundwater. About 77% of the available sulfur is in non-flooded portions of the Mill Fork Area.

## 4. Groundwater Discharge

Groundwater flows into the Mill Fork Area mine workings from both mine roof and floor sources and the general direction of groundwater flow in the mine workings are shown on Figure 1. Because of the approximate 3 % westerly slope of the mine floor, groundwater has flooded the western portion of the 12$^{th}$ to 17$^{th}$ West mined panels and the western portion of the 21$^{st}$ to 23$^{rd}$ West mined panels. Elsewhere the mine floor slopes gently to the east and groundwater flow is captured in one of three sumps which from south to north are the 11$^{th}$ West, the 17$^{th}$ West, and the 10$^{th}$ North. These sumps are located just outside of the longwall panel seals. Quasi steady state flow to the sumps are about 5 gpm at the 11$^{th}$ West, 100 gpm at the 17$^{th}$ West, and 50 gpm at the 10$^{th}$ North. Water collected at the sumps is currently used as in-mine process water or is discharged at the Deer Creek Portals. After mine closure this and other Mill Fork Area mine water will flow across the floor of mined out areas, along the Mill Fork access workings, and will discharge to Rilda Canyon (Figure 1). The current total groundwater discharge rate to the in-mine workings is about 1,000 gpm. The long-term groundwater discharge rate from the Mill Fork Area will likely decline after the end of mining activities.

## 5. Geochemistry of Mill Fork Area Groundwater

Since May 1, 2012, water quality samples have been collected monthly from the Hiawatha 11$^{th}$ and 17th West sumps and from the Blind Canyon 10$^{th}$ North XC-5 borehole for analysis. Sulfate, pH, and total and dissolved iron concentrations are shown in Table 1. Analysis of groundwater samples for major ions from the Hiawatha seam 11$^{th}$ and 17$^{th}$ West sumps and the Blind Canyon seam borehole collected on December 18, 2013 and January 1, 2014 are shown in Table 3. On

November 6, 2013 samples were collected for analysis of the stable isotope $\delta^{34}S$ on dissolved $SO_4^{2-}$ and for the stable isotopes $\delta^{18}O$ and $\delta^{2}H$ of the water (Table 4). The $\delta^{18}O$ and $\delta^{2}H$ data did not provide significant information regarding iron and sulfate and are not discussed herein.

Both the 11th and 17th West collection locations drain the eastern dipping portion of the Mill Fork Area Hiawatha seam workings and the Blind Canyon borehole represents groundwater in the overlying Blind Canyon seam.

## 5.1 Dissolved and Total Iron

The dissolved iron contents in most samples are less than the laboratory detection limit of 0.03 mg/L, however concentrations as great as 1.19 mg/L have been reported in Hiawatha seam groundwaters (Table 1). The total iron concentrations in both Hiawatha seam locations are typically greater than 1 mg/L and the average total iron concentrations in the 11th and 17th West sump samples are 1.6 and 3.47 mg/L, respectively (Table 1).

Although there is considerable scatter in the plot of total iron data, there is an apparent general trend of decreasing concentrations over the 18 months of record (Figure 4a). Assuming a linear decay function and projecting best fit linear regression lines through the data, the total iron concentrations would intercept the 0 mg/L concentration in 2016 and 2019 for the 11th and 17th West sumps, respectively. The $r^2$ (i.e. goodness of fit for linear regression) values of the best fit lines are less than 0.3, which means the regression lines are not a good predictor of future outcomes and considerably more temporal data are need to validate a decreasing trend in the data. An $r^2$ value of 1 means that all of the data fall on the regression line and a value of 0 means that the data are completely random. Typically an $r^2$ value greater than 0.5 is needed to assume a linear data fit.

Both the dissolved and total iron concentrations of all Blind Canyon borehole samples were below the detection limits and iron is not an issue.

## 5.2 Dissolved Sulfate ($SO_4^{2-}$)

The most recent $SO_4^{2-}$ concentrations in the Blind Canyon Borehole and the 17th West sump groundwaters average 132.5 and 181.1 mg/L, respectively (Table 3). These values are considerably greater than the average concentrations of about 70 mg/L for in-mine groundwaters in the Wasatch Plateau and the Book Cliffs (Mayo et al., 2003). The average value for the 11th West sump is only 36.7 mg/L (Table 1) which may represent quasi-steady state conditions for low sulfur areas.

A plot of the monthly $SO_4^{2-}$ analysis (May 2012 to February 2014 data; Figure 4b) are better behaved than are the total iron data. Linear regressions of all of the $SO_4^{2-}$ data have decreasing concentration trends that approach 0 mg/L in about the year 2025. The $r^2$ values associated with the Blind Canyon Borehole, 17th West sump, and 11th West sump are 0.62, 0.90, and 0.80, respectively. Although it is unlikely that $SO_4^{2-}$ concentration will ever reach 0 mg/L, substantial decreases in $SO_4^{2-}$ concentrations in the Blind Canyon borehole and the 17th West sump are likely.

## 5.3 Iron Hydroxide Precipitate

Mine personnel have observed rust colored iron precipitate in the Mill Fork Area underground outflows and a rust coloration of some in-mine groundwater. Rust colored precipitate was collected from outby of the 17th West seal and iron was precipitated from water samples collected at the 17th West seal during both in-mine and laboratory experiments.

In the mine, the rapid conversion from dissolved iron to iron precipitate is illustrated in Figure 5 where 2.5 gallons of water was poured 10 times between two clean 5 gallon buckets at the 17th West seal. Pouring between the buckets oxygenated the groundwater and the dissolved iron quickly converted to a rust colored precipitate. In the figure, a non-agitated control sample is shown for comparison.

X-ray diffraction (XRD) scans of the in-mine and laboratory precipitate indicates that the precipitate is amorphous and does not have an x-ray pattern (Appendix A). Based on the XRD analysis and the physical properties David Tingey (BYU Laboratory of Isotope Geochemistry) concluded that the precipitate is either goethite (FeOOH) or its hydrated form limonite ($FeOOH \bullet nH_2O$).

### 5.4 Sulfur Isotopes

In an attempt to better understand the origin of the total iron and the elevated $SO_4^{2-}$ concentrations, the $SO_4^{2-}$ has been analyzed for sulfur isotopes (Table 4). Pyrite typically has a $\delta^{34}S$ value of about 0 ± 3 ‰. Mayo et al., (2000) found a value of +3.4 ‰ for a pyrite sample in the SUFCO coal mine in Utah. Data for pyrite in the Deer Creek mine are not available. Oxidized sources of sulfur, such as marine gypsum and other marine sedimentary minerals, have values of +10 to +40 ‰ (Thode, 1991). All of the Mill Fork Area samples have very positive $\delta^{34}S$ values (i.e., +8.3 to +35.5 ‰) which suggest marine sedimentary or marine evaporative minerals as the primary source of dissolved sulfur.

### 5.5 Chemical Reactions

All of the groundwater samples, including the monthly sampling of the Hiawatha Seam 11$^{th}$ and 17$^{th}$ West sumps, and the Blind Canyon Seam borehole (Tables 1 and 3), have near neutral to mildly basic pH values indicating that acid drainage is not an issue. Groundwaters discharging from Utah coal mine environments are typically basic due to the abundance of carbonate minerals associated with the coal deposits (Mayo et al., 2000).

### 5.5.1 Major Ions

The major ion chemistry and the geochemical evolution of the Hiawatha 11th and 17th West seals and the Blind Canyon borehole water provide additional insight into the origin of both the total iron and the elevated $SO_4^{2-}$ concentrations. In Table 3, the major ion concentrations (mg/L) have been converted to reacting equivalents to better understand chemical reactions. Units of reacting equivalents are milliequivalents per liter (meq/L).

The meq/ L unit allows direct comparison of reacting concentrations of cations and anions. Conversion factors between meq/L and mg/L for major ions follow:

| | meq/L | mg/L |
|---|---|---|
| $Ca^{2+}$ | 1 | 20.0 |
| $Mg^{2+}$ | 1 | 12.2 |
| $Na^{+}$ | 1 | 23.0 |
| $K^{+}$ | 1 | 39.1 |
| $HCO_3^{-}$ | 1 | 61.0 |
| $SO_4^{2-}$ | 1 | 48.0 |
| $Cl^{-}$ | 1 | 35.5 |

By using reacting equivalents it is easier to evaluate chemical reactions than by using concentrations in mg/L. For example the dissolution of 68 mg of gypsum ($CaSO_4 \bullet H_20$) in a liter of water would yield 1 meq/L of both $Ca^{2+}$ and $SO_4^{2-}$ and 20 and 48 mg/L of $Ca^{2+}$ and $SO_4^{2-}$, respectively.

Total iron concentrations have been converted to their corresponding dissolved ferric ($Fe^{3+}$) concentrations and these concentrations have also been converted to reacting equivalents (Table 3). A comparison of the total iron in the Hiawatha 11th and 17th West waters converted to reacting $Fe^{3+}$ equivalents with the $SO_4^{2-}$ reacting equivalents suggests that only a small portion of the $SO_4^{2-}$ is from pyrite or marcasite oxidation. In the 11th and 17th West waters, the $SO_4^{2-}$ reacting equivalents are one to two orders of magnitude greater than their equivalent $Fe^{3+}$ values (Table 3). The average reacting equivalents of $SO_4^{2-}$ in the 11th and 17th West waters are 0.70 and 2.54, respectively, whereas their corresponding reacting equivalents of $Fe^{3+}$ are only 0.02

and 0.08. The ratios of calculated $Fe^{3+}$ reacting equivalents to the measured $SO_4^{2-}$ reacting equivalents are 0.029 and 0.031 for the 11th and 17th West sump samples, respectively. These similar ratios suggest that the sulfate/iron sulfide ratios are similar in the rocks which have contact with mine waters regardless of location. Some of the total iron in the water may have settled out prior to sampling and it is possible that the reported total iron somewhat under measures the total amount. However, it is unlikely that the lost total iron approaches the $SO_4^{2-}$ reacting equivalents. The $\delta^{34}S$ and the $Fe^{3+}/SO_4^{2-}$ ratios of reacting equivalents suggest that the origin of most of the $SO_4^{2-}$ may be explained by non-redox reactions (i.e., pyrite) which are described below.

Major ion solute compositions of groundwaters are the result of interactions between groundwaters and bedrock lithology and between groundwaters and gases. The general reactions responsible for most of the chemical evolution of groundwaters may be described as follows. Groundwater acquires most of its $CO_{2(g)}$ in the soil zone where the partial pressures of $CO_2$ greatly exceeds atmospheric levels. In the in-mine environment additional $CO_{2(g)}$ is available from the gob atmosphere where the $CO_2$ content is an order of magnitude greater than the outside air. The Mill Fork Area in-mine gas composition is described below. $CO_2$ combines with water to form carbonic acid according to

$$CO_{2(g)} + H_2O = \underset{\text{(carbonic acid)}}{H_2CO_3} \qquad (1)$$

Carbonic acid dissociates into $H^+$ and $HCO_3^-$

$$H_2CO_3 = HCO_3^- + H^+ \qquad (2)$$

The $H^+$ ions temporarily decrease the pH of the water but are quickly consumed by the dissolution of carbonate minerals that are abundant in the mine environment. Carbonate mineral dissolution is represented as

$$2H^+ + \underset{\text{(dolomite)}}{CaMg(CO_3)_2} = Ca^{2+} + Mg^{2+} + 2HCO_3^- \qquad (3)$$

and

$$H^+ + CaCO_3 = Ca^{2+} + HCO_3^- \quad (4)$$
(calcite)

The net effect of reactions 3 through 4 is to increase the pH and the $Ca^{2+}$, $Mg^{2+}$, and $HCO_3^-$ contents of waters.

Dissolution of gypsum, which is present in many formations in the region, can increase the $Ca^{2+}$ and $SO_4^{2-}$ contents in the absence of $CO_{2(g)}$ and $H^+$ according to

$$CaSO_4 \bullet 2H_2O = Ca^{2+} + SO_4^{2-} + 2H_2O \quad (5)$$
(gypsum)

Most $CaSO_4$ is in the hydrated form but some occurs without attached water molecules and is known as anhydrite. Anhydrite forms are implicitly included when gypsum is described.

Both $Mg^{2+}$ and $SO_4^{-2}$ can also be released by the dissolution of very soluble minerals such as epsomite which may form in coal environments where the peat was inundated by sea water. Dissolution of epsomite may be represented as

$$MgSO_4 = Mg^{2+} + SO_4^{2-} \quad (6)$$
(epsomite)

Elevated $Na^+$ concentrations may result from either the dissolution of small amounts of very soluble halite or from ion exchange on clay particles or on sodium zeolites. Halite dissolution will increase the overall solute concentration (i.e. TDS) and will yield equal $Na^+$ and $Cl^-$ contents when the solute compositions are reported in the meq/L units. Ion exchange will not directly elevate the overall solute content, but will result in increased $Na^+$ concentrations at the expense of reduced $Ca^{2+}$ and/or $Mg^{2+}$ concentrations.

Halite dissolution may be represented as

$$NaCl = Na^+ + Cl^- \quad (7)$$
(halite)

Ion exchange may be represented by reactions involving the sodium zeolite analcime,

$$2NaAlSi_2O_6 \bullet H_2O + Ca^{2+} = Ca(AlSi_2O_6)_2 \bullet H_2O + 2Na^+ \quad (8)$$

$$2NaAlSi_2O_6 \bullet H_2O + Mg^{2+} = Mg(AlSi_2O_6)_2 \bullet H_2O + 2Na^+ \quad (9)$$

Clay mineral ion exchange which may be represented as

$$Ca^{2+} + \text{Na-clay} = 2Na^+ + \text{Ca-clay} \quad (10)$$

$$Mg^{2+} + \text{Na-clay} = 2Na^+ + \text{Mg-clay} \quad (11)$$

In all of the mine waters the $Na^+$ reacting equivalents exceed the $Cl^-$ reacting equivalents by an order of magnitude or more (Table 3) which suggest that ion exchange (Eqs. 8-11) is the primary source of dissolved $Na^+$ rather than halite dissolution (Eq. 7). Although there are other potential sources of $Cl^-$, such as silicate mineral dissolution, most of these chemical reactions only yield meager amounts of $Cl^-$ and are not considered further. Ion exchange requires a source of dissolved $Ca^{2+}$ or $Mg^{2+}$. Calcite, dolomite and gypsum dissolution (Eqs. 3-5) are all potential sources for these cations in the mine environment.

In both the Hiawatha 11$^{th}$ West seals and the Blind Canyon borehole groundwaters the $HCO_3^-$ reacting equivalents exceed the $Ca^{2+}$ plus $Mg^{2+}$ reacting equivalents by 3.03 and 1.51 meq/L, respectively. The $Ca^{2+}$ or $Mg^{2+}$ deficit in the 11$^{th}$ West water can largely be accounted for by carbonate mineral dissolution and less than 1 meq/L of gypsum dissolution is necessary to account for the excess $Na^+$. This is consistent with the fact that the $SO_4^{2-}$ content is only 0.7 meq/L. In the Blind Canyon borehole samples carbonate mineral dissolution can only account for about 25% of the excess $Na^+$ and gypsum dissolution is required to provide the additional $Ca^{2+}$ for ion exchange reactions. In these samples the average $SO_4^{2-}$ content is 2.54 meq/L.

All of the groundwaters are supersaturated with respect to carbonate minerals and under saturated with respect to gypsum (Table 3). Saturation is defined as log SI = 0.00 ± 0.1. Values less than 0.01 means that the water is under saturated and can dissolve additional minerals and values greater than 0.01 means the water is supersaturated and has a thermodynamic tendency to precipitate minerals. The saturation condition for carbonate minerals limits the amount of $Ca^{2+}$ and $Mg^{2+}$ that can be supplied by carbonate mineral dissolution and under saturation of gypsum allows for the dissolution of all available gypsum.

### 5.5.2 Pyrite – Marcasite Dissolution

Ken Fleck (personal communication) indicated that the iron sulfide mineralization occurs in more than one form and one of these is highly reactive when exposed to water. In order to determine the mineralogy of the iron sulfide minerals XRD (x-ray diffraction) analysis was performed on samples from the coal and an igneous dike in the mine by Dave Tingey (BYU Laboratory of Isotope Geochemistry, Appendix A). Samples were collected from a high-sulfur split rock and the cleat in the 17$^{th}$ West submains XC-6, a high-sulfur split rock from the 17$^{th}$ West longwall at about XC-60, and an igneous dike. The igneous dike sample only contained pyrite; however the coal samples contained both pyrite and its pseudomorph marcasite. In the laboratory samples marcasite constitutes as much as much as 45 % of the iron sulfide mineralization (Appendix A).

Both pyrite and marcasite have the same chemical composition ($FeS_2$) and undergo similar decomposition reactions. The general form of pyrite and marcasite oxidation can be represented as

$$\underset{\text{(pyrite or marcasite)}}{2FeS_{2(s)}} + 7O_2 + H_2O = 2\,Fe^{2+}_{(aq)} + 4SO_4^{2-}{}_{(aq)} + 4H^+ \qquad (12)$$

And the ferrous iron (II) may be oxidized to ferric iron (III)

$$4Fe^{2+}_{(aq)} + 7O_2 + 4H^+ = 4\,Fe^{3+} + 2H_2O \qquad (13)$$

Both reactions (12 and 13) can be catalyzed by microorganisms that derive energy from the oxidation reactions and pyrite oxidation is greatly facilitated by microorganism. Marcasite oxidation may readily occur without such organisms. Pyrite has a cubic structure whereas marcasite has an orthorhombic structure. The difference in crystal structures makes marcasite considerably more soluble than pyrite when in contact with oxygen rich water. Solubility controls are described below.

From equations 12 and 13 it is clear that an abundant supply of oxygen is required for the dissolution of iron sulfide minerals and the subsequent release of iron and sulfate.

Under suitable oxidizing/reducing potential (ORP) and pH conditions the released ferric iron ($Fe^{3+}$) then combines with water to form amorphous iron hydroxide, which colors the water red/yellow/orange according to.

$$Fe^{3+} + 2H_2O = \underset{\text{(goethite)}}{FeOOH_{(s)}} + 3H^+ \qquad (14)$$

The oxidation of reduced iron minerals such as pyrite and marcasite and the form of the released ion are regulated by both the pH and the ORP of the water (Figure 6). ORP is commonly measured as Eh or pe (in millivolts) where Eh = 0.059pe. Although there are no free electrons in a solution, it is useful to define the electron activity as pe where pe = -log electron activity in a fashion similar to defining pH as –log of the hydrogen ion activity. If the ORP is low (i.e., reducing conditions) there is strong tendency for a solution to donate protons and if the ORP is high (i.e., oxidizing conditions) there is a strong tendency for a solution to accept protons. Dissolved oxygen is a strong electron acceptor and thus the presence of $O_2$ in groundwater facilitates the oxidation of pyrite and marcasite.

In reduced, low pH water the dissolved iron is often in the form of $Fe^{2+}$ (Eq. 12), but may be in the form $Fe^{3+}$ in more oxidized water (Figure 6). In neutral to basic oxidized water, which is typical of mine floor water in Utah coal mines and in the Deer Creek mine, both ferrous and ferric iron combine with water to form rust colored iron hydroxide precipitate (Eqs. 13-14). This iron hydroxide precipitate is amorphous and may not readily settle from moving water.

In many mining environments reactions 12-13 result in acid mine drainage (AMD), however the abundance of carbonate minerals in Utah coal mines neutralizes the acid generated as shown in equations 1-3 (Mayo et al., 2000).

### 5.5.3 Solubility Controls

As described above, factors including OPR and/or pH control the conditions necessary for the dissolution of some minerals including carbonates and pyrite and marcasite. Other minerals such as halite and gypsum and $MgSO_4$ can dissolve independently of these controls. The

concentrations of ions released by chemical reactions are regulated by the solubility of each mineral species and there is a very wide range of mineral solubility. The maximum solubility can be defined by the equilibrium constant (Keq) for each mineral. Keq is temperature and for some minerals pH and or pe dependent. The equilibrium constant is sometimes known as the Ksp (solubility product) and is defined as

$$\text{Keq} = \frac{concentrations\ of\ products}{concentrations\ of\ reatants}$$

Using calcite as an example

$$\text{Keq Calcite} = \frac{Ca^{2+} \quad HCO_3^-}{CaCO3}$$

where ( ) are the chemical activities which are similar to the concentrations. The activity of a solid has a value of 1.

The equilibrium constants and solubility for reactions of interest are listed in Table 5. From the table it is apparent that the dissolution of gypsum and $MgSO_4$ can release considerably more $SO_4^{2-}$ than pyrite and that iron hydroxide precipitate is essentially insoluble. These differences in solubility may partially explain why the trends of $SO_4^{2-}$ concentrations in Mill Fork Area waters are declining over time and there is no measurable decline in total iron (Figure 4a, b). The high equilibrium constants of gypsum and minerals such as epsomite mean that the available gypsum and epsomite will more readily leach out whereas it will take considerably longer for the available pyrite/marcasite to leach.

### 5.6 In-Mine Factors Controlling $SO_4^{2-}$ and Iron Concentrations Due To Oxidizing/Reducing Conditions and Dissolved Oxygen

The average Eh of water collected on March 6, 2014 by David Tingey at the 17th West seal was -150 mv, whereas the well oxygenated groundwater in the mine had an Eh of about +300 mv.

The negative Eh of the water accumulating behind the 17th West seal reflects reducing conditions, whereas the positive value of the well oxygenated groundwater measured after the 10 bucket pours during the in-mine experiment reflects oxidizing conditions. Because groundwater collected at the 17th West seal has had contact with mine atmosphere behind the seal, the groundwater had been partially oxygenated and the groundwater entering the mine environment is more reduced than indicated by the measured value of the 17th West discharge.

Eh is difficult to measure accurately and hard to quantify, therefore the dissolved oxygen (DO) content is usually a better measure of a waters ORP. There is no direct relationship between ORP and the concentration of dissolved oxygen as the concentration of a dissolved gas is inversely proportional to water temperature and numerous other factors and reactions can affect ORP.

The measured gas composition of the atmospheric environment behind the 17th West seal indicates that the non-ventilated in-mine atmosphere is enriched in both $CO_2$ and methane ($CH_4$) relative to the outside atmosphere (Table 6). It is assumed that the in-mine ventilated atmosphere has a similar composition as the outside non-mine atmosphere. Although the sealed 17th West mine gob area atmosphere is somewhat depleted in oxygen relative to the outside atmosphere, there is abundant $O_2$ to oxygenate groundwater behind the seal.

Field and laboratory measurements of DO in groundwater samples were conducted to evaluate the potential oxygen content of in-mine groundwater (Table 7, Appendix A). In-mine analysis of DO in groundwater collected from the 17th and 11th West sumps and the TW-10 borehole had low oxygen concentrations of 2.44, 4.03, and 4.72 mg/L, respectively. Although there is abundant $O_2$ behind the seals the low DO contents of the waters suggest that there is little agitation of the water. The laboratory analysis of the two sump samples collected at the same time is consistent with the low Eh of the in-mine analysis. The TW-10 borehole sample had been exposed to $O_2$ prior to the laboratory analysis or during sampling.

Three laboratory flow though cell experiments were performed by David Tingey on 17th West sump groundwater to further evaluate the impact of $O_2$ on behind the seal groundwater that would flow on the mine floor if permitted to discharge at the Rilda Canyon portals. The

groundwater samples were collected in large containers without air space and when water was removed from the containers in the laboratory the displaced water was replaced with nitrogen gas to prevent oxygenation of the raw water. In each experiment water was transferred to a flow through cell and readings were made every 2 minutes for 6 minutes. In the first experiment the flowing water was allowed to equilibrate with the laboratory atmosphere and the DO increased to 6.28 mg/L. When the water was injected with laboratory air the DO increased to 7.35 mg/L. After letting the samples equilibrate over two days the measured DO dropped 5.77 mg/L on March 11, 2014. The increased conductivity and pH associated with the March 11 flow through cell data may be due to evaporation of the water as it was open to evaporation in the laboratory.

Results of the laboratory experiments suggest that groundwater flowing on the mine floor will likely acquire additional $O_2$ and the dissolved $Fe^{2+}$ may oxidize to $Fe^{3+}$ (Eq. 13) and the $Fe^{3+}$ would likely be converted to ferric hydroxide (Eq. 14) turning the water rust colored.

## 5.7 Oxidized Sulfur and Elevated Mg Concentrations

Although much of the excess $SO_4^{-2}$ concentrations in the discharge waters may be the result of gypsum dissolution it is unlikely that most of the elevated $Mg^{2+}$ concentrations (Table 3) are due to dolomite dissolution. Dolomite has not been reported as a common mineral in the Utah coal district and pure dolomite is rare. The dissolution of pure dolomite would yield equal reacting equivalents of both $Ca^{2+}$ and $Mg^{2+}$. In two sampling locations, 17$^{th}$ West Seals and Blind Canyon Borehole, the $Mg^{2+}$ reacting equivalents exceed the $Ca^{2+}$ reacting equivalents.

In an attempt to better understand the source of the elevated $Mg^{2+}$ and its relationship to the elevated $SO_4^{-2}$, dissolution experiments were conducted on coal and parting shale samples. The samples were crushed and allowed to equilibrate with $CO_2$ and oxygen free water (i.e., reducing condition) in an oxygen free environment (Appendix A). The purpose of the $CO_2$-oxygen free environment was to evaluate the potential dissolution of oxidized sulfur bearing minerals and to reduce the effects of pyrite oxidization and acid driven carbonate mineral dissolution. Some oxygenation may have occurred during liquid transferring procedures.

Results of the leaching experiments are shown in Table 8. Although only two samples were leached and the results do not represent a systematic sampling of the in-mine environment, the results provide valuable insight into in-mine chemical reactions. In the absence of $CO_2$ and oxygen only minor mineral dissolution occurred in the coal sample. In the parting shale sample it appears as if appreciable dissolution of both reduced and oxidized sulfur minerals occurred. Sulfate was the dominant anion (97.9%) and dominant anions include $Ca^{2+}$ (35.3%), $Mg^{2+}$ (42.5%), and $Fe^{3+}$ (19.4%). The small amounts of $HCO_3^-$ (2.1%) and $Na^+$ (1.8%) means that carbonate mineral dissolution and ion exchange were negligable reactions and that gypsum and $MgSO_4$ dissolution were responsible for the elevated $Ca^{2+}$ and $Mg^{2+}$ and for most of the $SO_4^{-2}$. In the parting sample, pyrite or other reduced iron species dissolution accounts for 19.8% of the dissolved $SO_4^{-2}$. The factors responsible for the release of dissolved iron were not investigated.

# 6 Estimated soluble iron sulfide in the Mill Fork Area

Although most of the dissolved $SO_4^{-2}$ in the 11$^{th}$ and 17$^{th}$ West sump waters is likely derived from the dissolution of oxidized sulfur (gypsum and epsomite) in the elevated sulfur zone, the total iron concentrations in discharge water clearly demonstrate that pyrite and marcasite oxidation provides some $SO_4^{-2}$ and releases iron which is converted to rust colored iron hydroxide.

Although the sulfur content in the elevated sulfur zones is known, the concentration of iron sulfide mineralization is unknown. Using the calculated $Fe^{3+}$ concentrations and the measured $SO_4^{2-}$ concentrations it is possible to make a 1$^{st}$ order estimate of the iron sulfide concentration in the high sulfur zones. Assuming the calculated $Fe^{3+}$ reacting equivalents represent the $SO_4^{2-}$ reacting equivalents due to iron sulfide oxidation and that both oxidized sulfate minerals (gypsum and $MgSO_4$) and pyrite contribute $SO_4^{2-}$ proportionally to their concentrations in water in the high sulfur zones, approximately 3% of the total sulfur in the high sulfur zones is from of iron sulfide. Assuming 55% of the iron hydroxide is pyrite and 45% is the very reactive marcasite, pyrite and marcasite constitute 1.65 and 1.35% of the total sulfur content in the high sulfur zones, respectively. Based on these assumptions the calculated potentially reactive total

pyrite and marcasite in the Mill Fork Area is 958 tons of which 775 tons are on the floor of the mine workings and 183 tons are in the vertical surfaces (Table 2).

In Table 2, the amounts of iron sulfide mineralization has been calculated for both pyrite and marcasite and these calculations include mine floors and vertical surfaces for both flooded and non-flooded portions of the Mill Fork Area. Total amounts are listed in both tons and in kg. Kilogram units are useful for evaluating the long-term impact of iron sulfide dissolution on in-mine water quality. When reviewing the calculated amounts in Table 2 it is important to keep in mind that the calculations are based on numerous assumptions and the results should only be considered as a 1$^{st}$ order approximation.

# 7 Other Potential Sources of Iron

Approximately 1,200 tons of beltline components, located up gradient of the proposed bulkhead location Mill Fork Access #2 XC-62.5 to 27$^{th}$ West, may be abandoned in the mine workings after mine closure. An unknown but large portion of the beltline components consists of iron that will be subject to iron oxidization (i.e., rusting). Assuming 50% of the total beltline components are iron, the total available iron for oxidation would become about 1,500 tons (600 beltline tons + 958 iron sulfide tons). Such oxidization will incrementally add to the dissolved and total iron in in-mine waters and the fate of this iron will be similar to the fate of iron from the oxidization of iron sulfide as described below.

# 8 Long-term Impacts of Iron Sulfide Mineral Dissolution on In-mine Water

Total oxidation and conversion to iron hydroxide (i.e., total iron) of the calculated iron sulfide in the Mill Fork Area would require about 75 years. If the beltline iron is abandoned in the mine total iron oxidation would require more than 100 years. The calculation assumes: 1) the total

available iron sulfide is 958 tons, 2) all of the iron sulfide has and will continue to have contact with oxygenated water, 3) the groundwater flow rate will remain at about 1,000 gpm, and 4) the steady state iron hydroxide concentration will be about 3.5 mg/L. Clearly these are assumptions are unreasonable and the experience of declining total iron concentrations in groundwater discharging from the adjacent Crandall Canyon Mine (Peterson Hydrologic, 2011) suggest that the total iron concentrations in Mill Fork Area discharge water will also decrease over time. Additionally, after the cessation of mining activities the discharge rate will likely decline substantially from the current 1,000 gpm. Several factors will regulate the long-term total iron concentrations in Mill Fork Area water. These factors are discussed below.

## 8.1 Open System Conditions

Open system conditions means that after mine closure Mill Fork Area groundwater will discharge to the surface at the Rilda Canyon portals and that this water will flow across the floor of the Mill Fork Area long wall panels area and the Mill Fork Access workings. Under open system conditions the current flooded and non-flooded portions of the workings will behave chemically differently.

Water in the flooded portions has low oxygen concentrations, reducing conditions prevail, and the turnover rate of water from the flooded to non-flooded portions is very slow. Gypsum and $MgSO_4$ dissolution is not ORP regulated and the $SO_4^{2-}$ concentration may become quite large. The elevated $SO_4^{2-}$ concentrations in the Blind Canyon borehole (Table 3) provide evidence for increasing $SO_4^{2-}$ concentrations in water that is not actively flushed from the system. Flooded region water has contact with both vertical surfaces and the mine floor and likely interacts with minerals to full saturation in the coal to a depth of 2 feet or more. Because water in the flooded portions has a very low turnover rate and reducing conditions will prevail the water will reach pyrite and marcasite saturation and the rate of additional iron sulfide oxidation will be slow. This means that most of the available iron sulfide mineralization will not react with in mine water, but would become reactive if the impounded water were drained from the mine.

The flooded regions of the Mill Fork workings are separated from the Joes Valley Graben by coal barriers. To date there is no evidence that this water leaks into the damage zone of the Joes Valley Fault or discharges into the Joes Valley Graben.

Water in the non-flooded portions of the Mill Fork Area workings will flow along the floor of the 7$^{th}$ North Mains, the Mill Fork Access Mains #1 and #2, and ultimately discharge to the surface via the Rilda Canyon portals. This water will have limited access to vertical surfaces and will only have contact with part of the mine floor. Elsewhere the mine floor may remain relatively dry, but the portion of mine floor that will be either wet or dry is unknown. Because the water will flow along the mine floor, the water will have ample opportunity to acquire mine atmosphere oxygen in both the non-flooded portions of the Mill Fork workings and the Mill Fork Access workings. In other words, oxidizing conditions will prevail and the water will be able to continually oxidize available iron sulfide minerals until the supply of iron sulfide mineralization is exhausted. Marcasite oxidation will occur rapidly and pyrite oxidation will require additional time. Bacteria in the water will aid in the oxidization of pyrite. Iron oxide exhaustion in the mine discharge water will occur over time but this will likely require years to tens of years. Water discharge from the portals will also have elevated $SO_4^{-2}$ concentrations.

## 8.2 Closed System Conditions

Closed system conditions means that after mine closure Mill Fork Area groundwater will not discharge to the surface at the Rilda Canyon portals and that this water will not flow across the floor of the Mill Fork Access workings. Construction of bulkheads in the Mill Fork access workings are proposed to seal the Mill Fork Area. One proposed location is near the down gradient end of the access workings (1$^{st}$ Right Sub-Mains XC-27.5) at an elevation of 7,793.9 feet and the other is located closer to the Mill Fork Area at Mill Fork Access #2 Mains XC-62.5, elevation 7,977 feet.

The net effect of the bulkheads will be to flood the most or all of the Mill Fork Area workings. Until the workings are completely flooded additional groundwater inflows will be oxygenated

and this water will react with oxidized sulfate, iron sulfide minerals, and belt line iron. The net effect will be an increase in both $SO_4^{2-}$ and total iron concentrations. After flooding is complete, the impounded water will become reducing which will ultimately result in steady state $SO_4^{2-}$ and total iron concentrations.

# 9 Not Included In This Investigation

An analysis of future groundwater flow rates and potential impacts of in-mine water leakage to the damage zone of the Joes Valley Fault and the Joes Valley Graben are beyond the scope of this investigation. Under closed systems conditions the impounded water in the Mill Fork Area will fully saturate the Hiawatha seam gob areas and may saturate the overlying rock, via fractures, to the aquifer system(s) that are draining into the Mill Fork Area workings. Analyses of chemical and hydrodynamic conditions associated with saturating overlying bed rock are also beyond the scope of this investigation.

Also not included in this investigation are the analyses of impacts of water leakage at the proposed bulkhead or other down gradient locations and the potential for catastrophic failure of the bulkhead.

Over time the water discharge rate from the Mill Fork Area will likely decline. The impact of such a decline relative to either total iron or $SO_4^{-2}$ concentrations has not been evaluated. Also not analyzed is the spatial distribution of belt line components and the impact of roof drip and mine floor water on the iron portion of the components on total iron and $SO_4^{-2}$ concentrations.

# 10 Conclusions

1. Zones of elevated sulfur and iron occur in the Hiawatha seam coal in the Mill Fork Area workings.

2. Several factors suggest that gypsum and $MgSO_4$ dissolution are the primary sources of the

elevated concentrations of $SO_4^{2-}$ in both the Hiawatha 17th West seals and the Blind Canyon borehole groundwaters. The factors are: 1) the very positive $\delta^{34}S$ values of all sampled groundwaters, 2) the $SO_4^{2-}$ concentrations in mine water greatly exceed the concentration available from iron sulfide oxidation, and 3) laboratory leaching experiments demonstrate that almost all of the $SO_4^{2-}$ is from the dissolution of oxidized sulfate minerals.

3. Hiawatha seam groundwaters in the Mill Fork Area contain elevated concentrations of total iron which makes the water rust colored when oxygenated. This elevated total iron is associated with groundwater that has contact with the elevated sulfur zone Hiawatha seam coal.

4. Based on a 1st order calculation, approximately 958 tons of iron sulfide minerals (pyrite and marcasite) will be potentially available in the elevated sulfur zones to interact with in-mine groundwater at the time of projected mine closure.

5. Approximately 600 tons of iron would also be available for oxidization from the beltline components if the beltline is abandoned in the mine workings.

6. Chemical interaction with oxygen containing water results in iron sulfide oxidization and is responsible for the formation of rust colored iron hydroxide which is reported as total iron in laboratory analysis.

7. Assuming that all of the potentially available iron sulfide mineralization will have contact with oxygen rich water it would take about 75 years to exhaust the total supply of iron sulfide. If the beltline iron is included the time to exhaustion would exceed 100 years. When realistic in-mine conditions are considered it is likely that supply of readily available iron sulfide would be exhausted in a few to tens of years under present conditions.

8. Water quality associated with two future mine closure options have been evaluated:

   a) The first condition, call herein the Open System, envision groundwater discharging to the surface from the Rilda Canyon Portals via Mill Fork Access workings. This

discharge water would be continually oxidized and would contain elevated concentrations of total iron for an indefinite period of time. Total iron concentration in the range of 1-3.5 mg/l would continue for several years. The water will also contain elevated $SO_4^{2-}$.

b) The second condition, called herein the Closed System, envisions no surface groundwater discharge due to the construction of bulkheads in the Mill Fork Access workings. The water impounded in the workings behind the bulkheads would become reducing and will attain elevated and steady state concentrations of total ion and $SO_4^{2-}$.

9. Water impounded behind Mill Fork bulkheads water would not discharge to the surface via the Rilda Canyon Portals. It is unlikely that the ensuing closed system water would leak out via the damage zone of the Joes Valley Fault or into Joes Valley, but analysis of this condition is beyond the scope of this investigation.

## 11 References Cited

Chou, C.-L, 1997, Geologic factors affecting the abundance, distribution and speciation of sulfur in coals: Proceeding 30th International Geological Congress, v18, part B, p. 47-57.

Mayo, A.L., Petersen, E.C., and Kravits, C., 2000, Chemical evolution of coal mine drainage in a non-acid producing environment, Wasatch Plateau, UT: Journal of Hydrology v. 236, n. 1-2, p. 1-16.

Mayo, A.L., Morris, T.H., Peltier, S., Petersen, E.C., Payne, K., Holman, L.S., Fogel, T., Black, B.J., and Gibbs, T.D., 2003, Active and inactive groundwater flow systems: evidence from stratified mountainous terrain: Bulletin Geological Society of America, v. 115, n. 12. p. 1456-1472.

Peterson Hydrologic, LLC, 2011, Investigation of iron concentrations in the Genwal Resources, Inc. Crandall Canyon mine discharge water: unpublished consulting report, dated 7 November, 2011, 22 p, plus tables, figures and appendix.

Thode, H.G., 1991, Chapter 1, Introduction *in* Stable isotopes in the assessment of natural and anthropogenic sulfur in the environment, H.R. Crouse and V.A. Grienko, ed:, Wiley and Sons, p. 1-26.

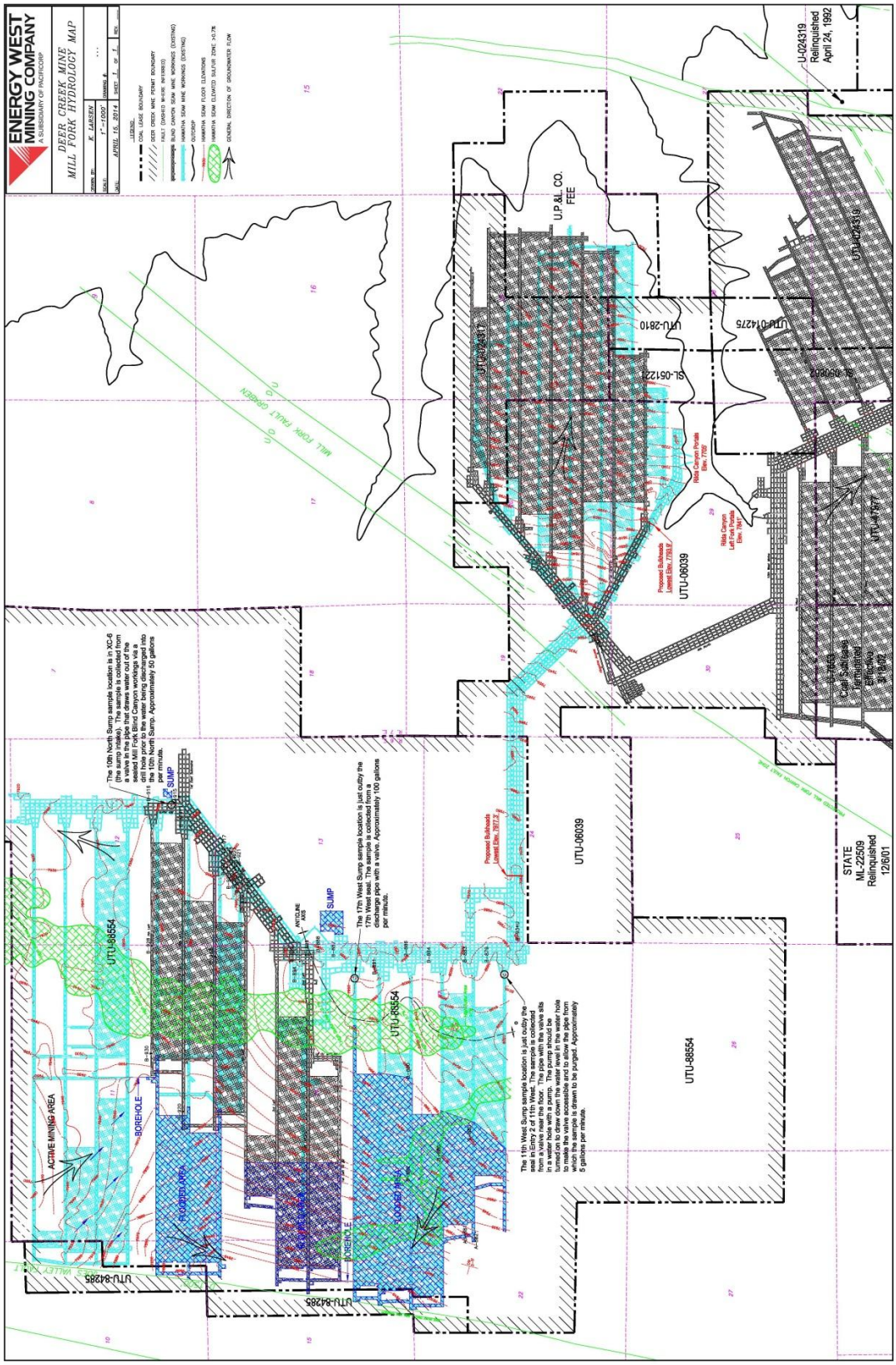


**Figure 1** Deer Creek Mine hydrogeologic map. The Mill Fork Area is to the left.

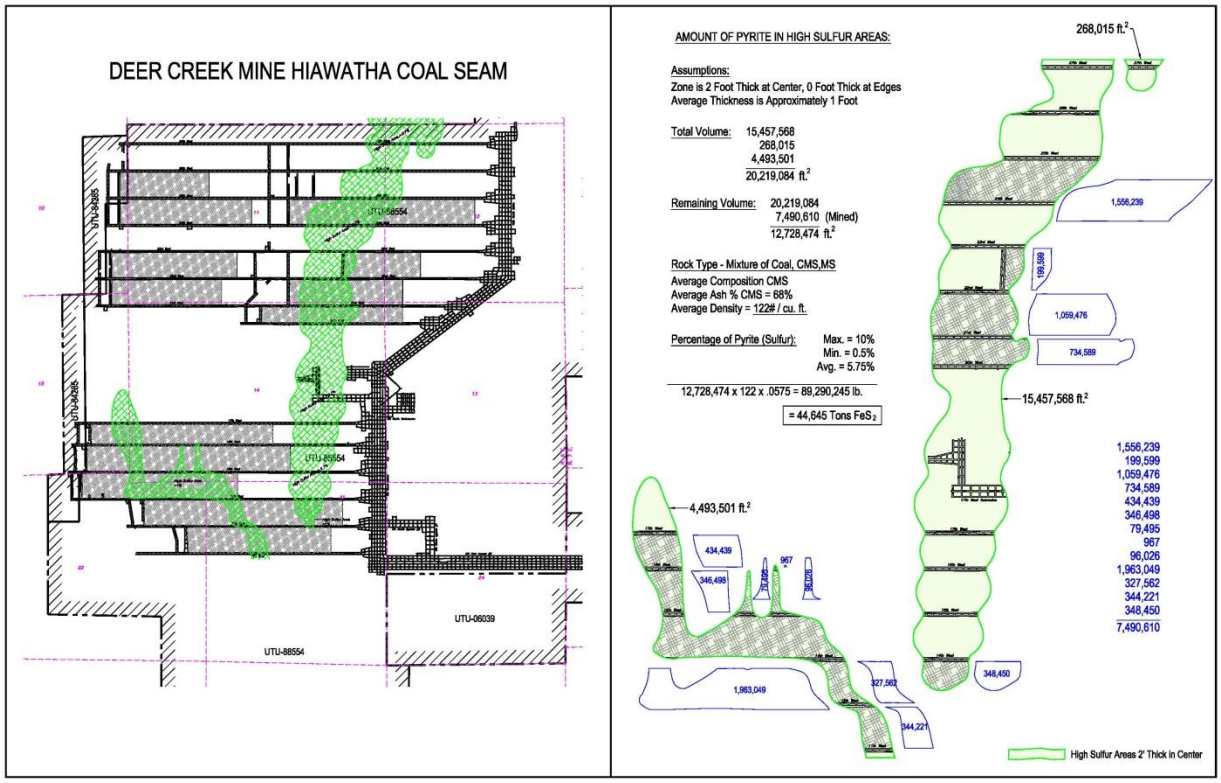


**Figure 2** Distribution of iron-sulfide mineralization in Hiawatha seam mine floor workings in the Mill Fork Area. Calculated tons of iron sulfide mineralization is shown in blue.

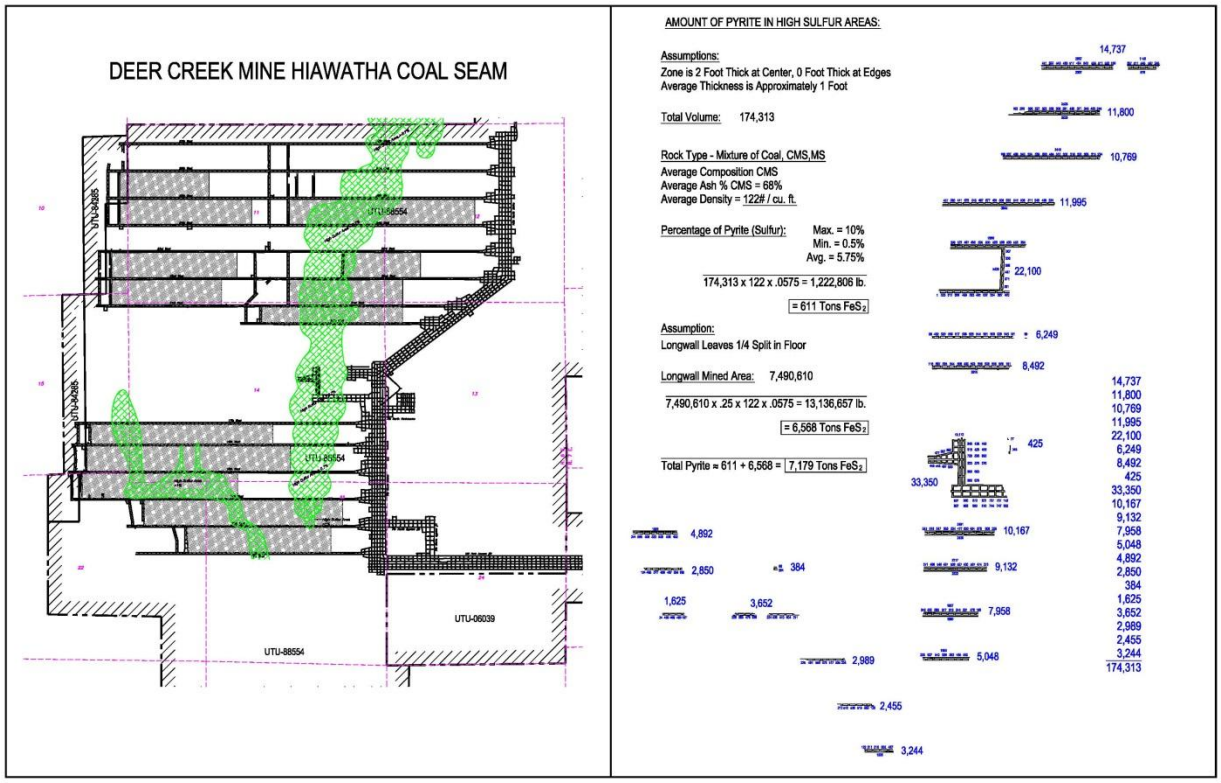


**Figure 3** Distribution of iron-sulfide mineralization in Hiawatha seam vertical surfaces in the Mill Fork Area. Calculated tons of iron sulfide mineralization is shown in blue.

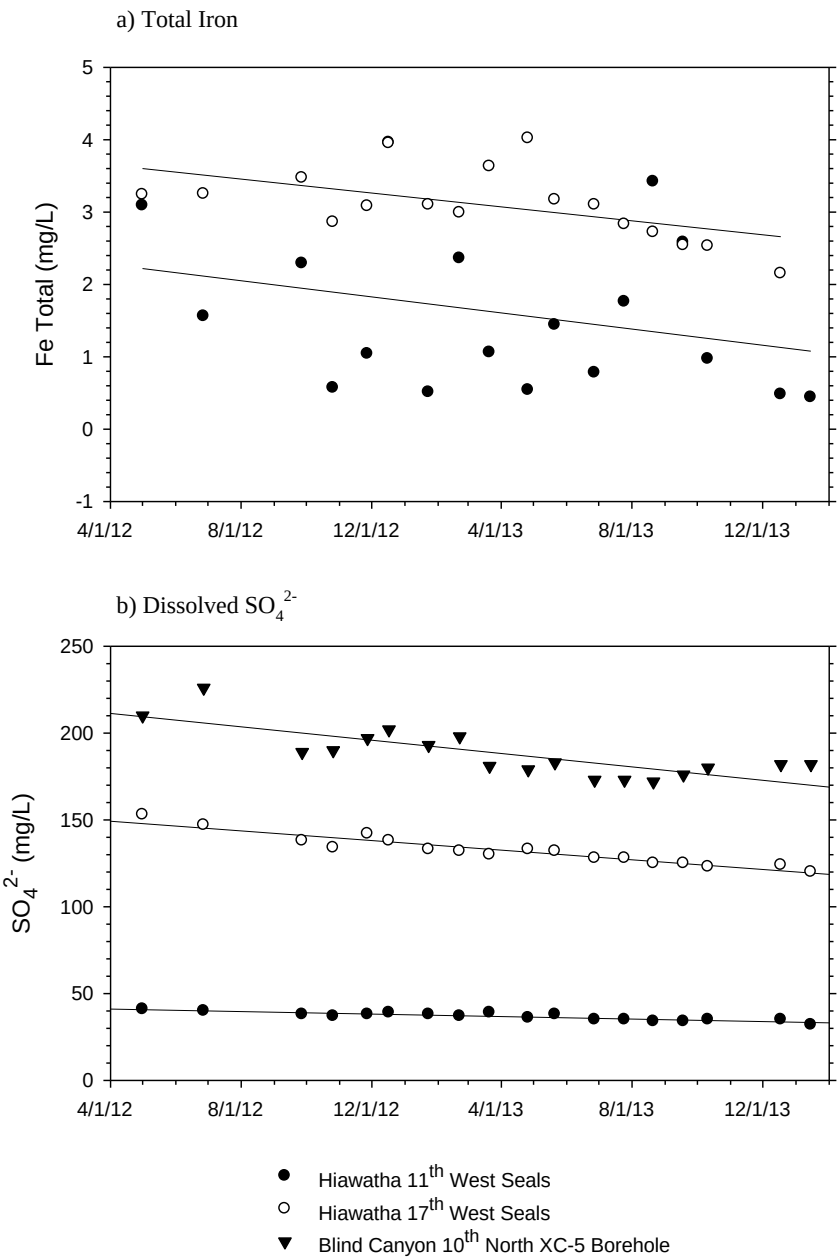


**Figure 4** Temporal variation in: a) total iron and b) $SO_4^{2-}$ concentrations in Mill Fork Area groundwater discharges.

**Figure 5** Results of in mine oxidation experiment of 17th West seals groundwater. Iron oxide precipitate is clearly visible in the left bucket water which was oxidized by transferring back and forth into an empty bucket. The clear water in the left bucket is the control 17th West seals water which was not oxidized and contains dissolved iron.

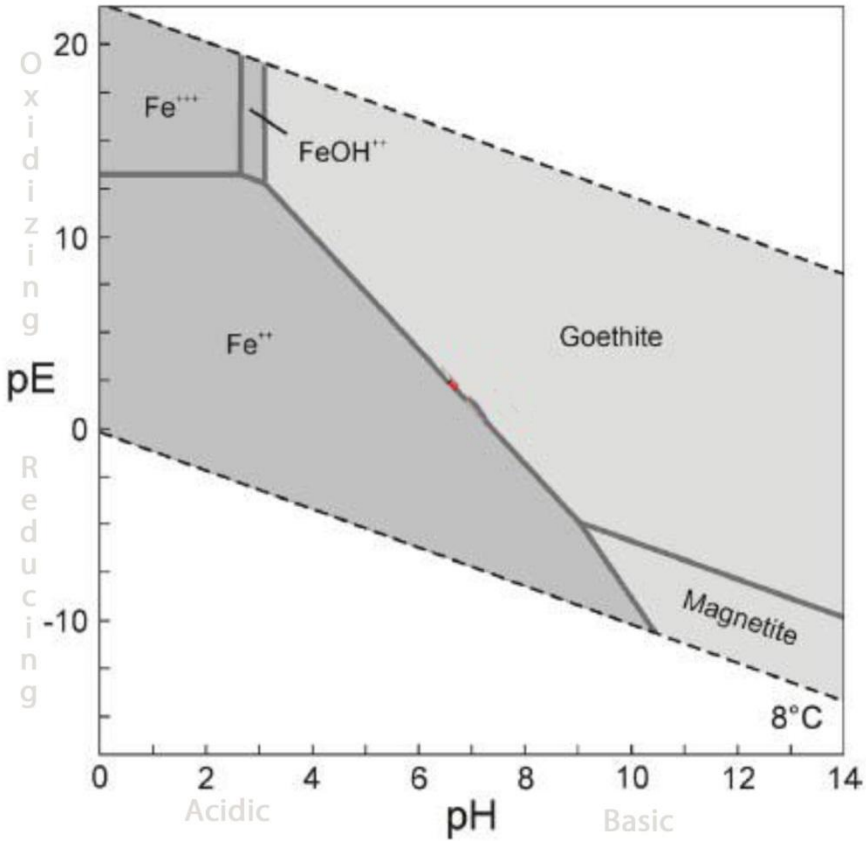


**Figure 6** Stability diagram showing the relationship between dissolved ferric and ferris iron and iron hydroxide precipitate (goethite).

**Table 1 Results of periodic sampling of Mill Fork area solute compositions.**

| | 5/1/12 | 6/27/12 | 9/27/12 | 10/26/12 | 11/27/12 | 12/17/12 | 1/23/13 | 2/21/13 | 3/21/13 | 4/26/13 | 5/21/13 | 6/27/13 | 7/25/13 | 8/21/13 | 9/18/13 | 10/11/13 | 12/18/13 | 1/15/14 |
|---|---|---|---|---|---|---|---|---|---|---|---|---|---|---|---|---|---|---|
| Hiawatha 11th West Seals | | | | | | | | | | | | | | | | | | |
| pH, units | 7.15 | 7.19 | 7.13 | 7.53 | 7.2 | 7.12 | 7.24 | 7.12 | 7.14 | 7.48 | 7.18 | 7.5 | 7.12 | 7.13 | 7.17 | 7.17 | 7.28 | 7.62 |
| Sulfate mg/L | 41 | 40 | 38 | 37 | 38 | 39 | 38 | 37 | 39 | 36 | 38 | 35 | 35 | 34 | 34 | 35 | 35 | 32 |
| Iron, Fe Total mg/l | 3.09 | 1.56 | 2.29 | 0.57 | 1.04 | 3.96 | 0.51 | 2.36 | 1.06 | 0.54 | 1.44 | 0.78 | 1.76 | 3.42 | 2.58 | 0.97 | 0.48 | 0.44 |
| Iron, Fe Dissolved mg/l | 1.19 | <0.03 | 0.44 | <0.03 | <0.03 | 0.11 | <0.03 | <0.03 | 0.11 | <0.03 | <0.03 | <0.03 | <0.03 | <0.03 | <0.03 | <0.3 | <0.03 | <0.03 |
| Hiawatha 17th West Seals | | | | | | | | | | | | | | | | | | |
| pH, units | 7.45 | 7.47 | 7.52 | 7.43 | 7.26 | 7.36 | 7.26 | 7.34 | 7.47 | 7.4 | 7.34 | 7.3 | 7.25 | 7.51 | 7.49 | 7.33 | 7.48 | 7.33 |
| Sulfate mg/L | 153 | 147 | 138 | 134 | 142 | 138 | 133 | 132 | 130 | 133 | 132 | 128 | 128 | 125 | 125 | 123 | 124 | 120 |
| Iron, Fe Total mg/l | 3.24 | 3.25 | 3.47 | 2.86 | 3.08 | 3.95 | 3.10 | 2.99 | 3.63 | 4.02 | 3.17 | 3.1 | 9.79 | 2.83 | 2.72 | 2.54 | 2.53 | 2.15 |
| Iron, Fe Dissolved mg/l | <0.03 | <0.03 | <0.03 | <0.03 | 0.09 | <0.03 | <0.03 | <0.03 | <0.03 | <0.03 | <0.03 | 0.14 | <0.03 | <0.03 | <0.03 | <0.3 | <0.03 | <0.03 |
| Blind Canyon 10th North XC-5 Borehole | | | | | | | | | | | | | | | | | | |
| pH, units | 7.61 | 7.62 | 7.6 | 7.55 | 7.47 | 7.51 | 7.37 | 7.39 | 7.42 | 7.46 | 7.37 | 7.32 | 7.34 | 7.36 | 7.41 | 7.46 | 7.35 | 7.3 |
| Sulfate mg/L | 210 | 226 | 189 | 190 | 197 | 202 | 193 | 198 | 181 | 179 | 183 | 173 | 173 | 172 | 176 | 180 | 182 | 182 |
| Iron, Fe Total mg/l | <0.05 | 0.06 | <0.05 | <0.05 | <0.05 | <0.05 | <0.05 | <0.05 | <0.05 | <0.05 | <0.05 | <0.05 | <0.05 | <0.05 | <0.05 | <0.05 | <0.05 | <0.05 |
| Iron, Fe Dissolved mg/l | <0.03 | <0.03 | <0.03 | <0.03 | <0.03 | <0.03 | <0.03 | <0.03 | <0.03 | <0.03 | <0.03 | <0.03 | <0.03 | <0.03 | <0.03 | <0.3 | <0.03 | <0.03 |

**Table 2 Calculated tons of sulfur and iron sulfide minerals in the high sulfur zones that may have contact groundwater. Only mineralization within two feet of exposed surfaces are included in the calculations.**

| | Mine Floor[1] | | | | Vertical Surfaces[1] | | | |
|---|---|---|---|---|---|---|---|---|
| Area | Mined Area ($ft^2$) | Reactive Mined Area ($ft^3$)[1] | Reactive Area Coal in Floor[2] (tons) | Sulfur (tons)[3] | Vertical Surfaces ($ft^2$) | Vertical Surfaces ($ft^3$)[1] | Reactive Vertical Surfaces[2] (tons) | Sulfur (tons)[3] |
| ***Non-flooded areas*** | | | | | | | | |
| 20th - 25th west panels | 3,558,903 | 3,558,903 | 217,093 | 12,266 | | | | |
| 11th to 14th west panels | 1,020,233 | 1,020,233 | 62,234 | 3,516 | | | | |
| 20th to 27th gate roads | | | | | 86,142 | 86,142 | 5,255 | 3,021 |
| 18th-19th gate roads | | | | | 33,775 | 33,775 | 2,060 | 1,185 |
| 11th -27th gate roads | | | | | 40,993 | 40,993 | 2,501 | 1,438 |
| ***Flooded areas*** | | | | | | | | |
| 14th -17th west panels | 2,920,474 | 2,920,474 | 178,149 | 10,065 | | | | |
| 14th -17th gate roads | | | | | 13,403 | 13,403 | 818 | 470 |
| **total** | 7,499,610 | 7,499,610 | 457,476 | 25,847 | 174,313 | 174,313 | 10,633 | 6,114 |

| | Mine Floor[1] | | | | | | Vertical Surfaces[1] | | | | | |
|---|---|---|---|---|---|---|---|---|---|---|---|---|
| | Iron Sulfide[4] (tons) | Pyrite[5] (tons) | Marcasite[6] (tons) | Iron Sulfide (kg) | Pyrite[5] (kg) | Marcasite[6] (kg) | Iron Sulfide[1] (tons) | Pyrite[5] (tons) | Marcasite[6] (tons) | Iron Sulfide (kg) | Pyrite[5] (kg) | Marcasite[6] (kg) |
| ***Non-flooded areas*** | | | | | | | | | | | | |
| 20th - 25th west panels | 368 | 202 | 166 | 333,820 | 183,601 | 300,437 | | | | | | |
| 11th to 14th west panels | 105 | 58 | 47 | 95,696 | 52,633 | 86,127 | | | | | | |
| 20th to 27th gate roads | | | | | | | 91 | 50 | 82 | 82,230 | 90,453 | 37,003 |
| 18th-19th gate roads | | | | | | | 36 | 20 | 32 | 32,241 | 35,465 | 14,509 |
| 11th -27th gate roads | | | | | | | 43 | 24 | 39 | 39,131 | 43,044 | 17,609 |
| ***Flooded areas*** | | | | | | | | | | | | |
| 14th -17th west panels | 302 | 166 | 136 | 273,936 | 150,665 | 246,542 | | | | | | |
| 14th -17th gate roads | | | | | | | 14 | 8 | 13 | 12,794 | 14,074 | 5,757 |
| **total** | 775 | 426 | 349 | 703,452 | 386,899 | 633,106 | 183 | 101 | 165 | 166,397 | 183,036 | 74,878 |

[1] Assumes thicness of active reactive zone is 1 ft from exposed surface

[2] Average density = 122 lbs/$ft^3$

[3] Assumes 5.75% average sulfur content

[4] Assumes 3% of total sulfur

[5] Assumes 1.65% of total sulfur

[6] Assumes 1.35% of total sulfur

**Table 3 Major iron compositions of and saturation Indices (SI) of Mill Fork areak groundwaters.**

| | | | | | | mg/L | | | | | | | | | | |
|---|---|---|---|---|---|---|---|---|---|---|---|---|---|---|---|---|
| Sample Location | date | Q (gpm) | oC | pH | cond µmhos /cm | TDS | Ca | Mg | Na | K | $HCO_3$ | Cl | $SO_4$ | Fe dissolved | Fe total | $Fe^{+3}$ equivalent |
| Hiawatha 11th West Seals | 12/18/13 | 4.3 | 15.7 | 7.28 | 900 | 499 | 73.3 | 24.4 | 90.2 | 9.9 | 538.9 | 8 | 35 | <0.3 | 0.48 | 0.302 |
| | 1/15/14 | 4.6 | 15.7 | 7.62 | 913 | 525 | 75.9 | 25.8 | 88.5 | 9.8 | 536.5 | 8 | 32 | <0.3 | 0.44 | 0.277 |
| | average | | 15.7 | 7.45 | 907 | 512 | 74.6 | 25.1 | 89.3 | 9.9 | 537.7 | 8 | 34 | <0.3 | 0.46 | 0.290 |
| | | | | | | | | | | | | | | | 0.35 | |
| Hiawatha 17th West Seals | 12/18/13 | ~100 | 12.5 | 7.48 | 928 | 536 | 64.4 | 42.5 | 64.8 | 11.2 | 388.9 | 12 | 124 | <0.3 | 2.53 | 1.594 |
| | 1/15/14 | ~100 | 12.6 | 7.33 | 921 | 542 | 65.4 | 43.2 | 62.6 | 10.6 | 421.9 | 12 | 120 | <0.3 | 2.15 | 1.355 |
| | average | | 12.6 | 7.41 | 925 | 539 | 64.9 | 42.8 | 63.7 | 10.9 | 405.4 | 12 | 122 | <0.3 | 2.34 | 1.474 |
| Blind Canyon 10th North XC-5 Borehole | 12/18/13 | 50 | 11.6 | 7.35 | 1206 | 733 | 75.8 | 46.7 | 134.7 | 11.4 | 554.7 | 7 | 182 | <0.3 | <0.05 | |
| | 1/15/14 | 50 | 11.6 | 7.30 | 1216 | 749 | 76.8 | 48.5 | 128.9 | 10.9 | 571.8 | 7 | 182 | <0.3 | <0.05 | |
| | average | | 11.6 | 7.33 | 1211 | 741 | 76.3 | 47.6 | 131.8 | 11.1 | 563.3 | 7 | 182 | <0.3 | <0.05 | |

| | | | | | | meq/L | | | | |
|---|---|---|---|---|---|---|---|---|---|---|
| | | Ca | Mg | Na | K | $HCO_3$ | Cl | $SO_4$ | $Fe^{+3}$ | sum cation | sum anion |
| Hiawatha 11th West Seals | 12/18/13 | 3.66 | 2.00 | 3.92 | 0.25 | 8.83 | 0.23 | 0.73 | 0.02 | 9.84 | 9.79 |
| | 1/15/14 | 3.79 | 2.12 | 3.85 | 0.25 | 8.79 | 0.23 | 0.67 | 0.01 | 10.01 | 9.69 |
| | average | 3.72 | 2.06 | 3.89 | 0.25 | 8.81 | 0.23 | 0.70 | 0.02 | 9.92 | 9.74 |
| Hiawatha 17th West Seals | 12/18/13 | 3.21 | 3.49 | 2.82 | 0.29 | 6.37 | 0.34 | 2.58 | 0.09 | 9.81 | 9.29 |
| | 1/15/14 | 3.26 | 3.55 | 2.72 | 0.27 | 6.91 | 0.34 | 2.50 | 0.07 | 9.81 | 9.75 |
| | average | 3.24 | 3.52 | 2.77 | 0.28 | 6.64 | 0.34 | 2.54 | 0.08 | 9.81 | 9.52 |
| Blind Canyon 10th North XC-5 Borehole | 12/18/13 | 3.78 | 3.84 | 5.86 | 0.29 | 9.09 | 0.20 | 3.79 | | 13.77 | 13.08 |
| | 1/15/14 | 3.83 | 3.99 | 5.61 | 0.28 | 9.37 | 0.20 | 3.79 | | 13.70 | 13.36 |
| | | 3.81 | 3.91 | 5.73 | 0.28 | 9.23 | 0.20 | 3.79 | | 13.74 | 13.22 |

| | Log Saturation Indicies (SI)[1] | | | |
|---|---|---|---|---|
| | Calcite | Dolomite | Gypsum | Halite |
| Hiawatha 11th West Seals | 0.43 | 0.56 | -2.1 | -7.7 |
| Hiawatha 17th West Seals | 0.19 | 0.36 | -1.63 | -1.7 |
| Blind Canyon 10th North XC-5 Borehole | 0.26 | 0.46 | -1.44 | -7.6 |

[1] Saturation = 0.00 ± 0.1; positive values incidate super saturation and negative values indicate under saturation

**Table 4 Stable isotopic compositions of dissolved sulfur and water collected on November 6, 2013.**

| | $\delta^{18}O$ ‰ | +/- | $\delta^{2}H$ ‰ | +/- | $\delta^{34}S$ ‰ | +/- |
|---|---|---|---|---|---|---|
| Hiawatha 11th West Seals | -17.18 | 0.40 | -129.5 | 1.0 | 35.5 | 0.2 |
| Hiawatha 17th West Seals | -17.07 | 0.40 | -128.3 | 1.0 | 22.8 | 0.2 |
| Blind Canyon 10th North XC-5 Borehole | -17.10 | 0.40 | -127.1 | 1.0 | 13.8 | 0.2 |
| Hiawatha 8w xc-25 #2 | -16.85 | 0.40 | -125.9 | 1.0 | 24.5 | 0.2 |
| Hiawatha11 N xc-9 #2 | -16.93 | 0.40 | -126.2 | 1.0 | 20.4 | 0.2 |
| Hiawatha 27 W outby sc-37 Ent 2 | -16.83 | 0.40 | -126.5 | 1.0 | 27.7 | 0.2 |
| Hiawatha 27 W Inby xc-70 Ent 2 | -16.94 | 0.40 | -126.9 | 1.0 | 8.3 | 0.2 |

**Table 5 Equilibrium constants and solubility of selected minerals of interest.**

| Mineral | Keq | Solubility @ 25 $^{o}$C (mg/L) |
|---|---|---|
| Gypsum | $10^{-4.5}$ | 2100 |
| Calcite | $10^{-8.4}$ | 100-500* |
| Dolomite | 10-17 | 90-480** |
| Pyrite | 10-18 | ***1-10 |
| Geothite | 10-37 | Essentially insoluble |

*$CO_2$ dependent

** pure dolomite is rare, most contains more Ca than Mg

*** value depend on the availability of $O_2$; rapidly oxidizes and precipitates

**Table 6 Gas composition of the atmosphere behind the 17th west seal and the average composition of the atmospere.**

| | Non-mine atmospheric average (%) | In-mine non-ventilated atmosphere behind 17$^{th}$ west seal (%) |
|---|---|---|
| Nitrogen | 78.084 | 81.17 |
| Oxygen | 20.946 | 13.65 |
| CO2 | 0.397 | 5.15 |
| Methane | 0.00018 | 0.04 |

**Table 7 Summary of field and laboratory dissolved oxygen**

| | Field DO (mg/L) | Laboratory DO (mg/L) | Laboratory conductivity (µm/cm) | Laboratory pH | Comments |
|---|---|---|---|---|---|
| 17th West #2 seal | | | | | |
| 2/26/2014 | 2.44 | 3.80 | | | |
| 3/7/2014 | | 6.28 | 788 | 7.18 | Average of 3 measurements over 6 minutes |
| 3/7/2014 | | 7.35 | 856 | 7.82 | Average of 3 measurements over 6 minutes with injection of laboratory air |
| 3/11/2014 | | 5.77 | 928 | 8.30 | Average of 3 measurements over 6 minutes after 2 day slow bubbling of laboratory air |
| MN-ME | | | | | |
| 2/26/2014 | 9.34 | 8.00 | | | |
| TW-10 | | | | | Borehole |
| 2/26/2014 | 4.72 | 6.50 | | | |
| 11th West #2 Seal | | | | | |
| 2/26/2014 | 4.03 | 4.20 | | | |

**Table 8 Summary of leaching experiments**

| | Ca | Mg | Na | K | $HCO_3$ | Cl | $SO_4$ | $Fe^{+3}$ |
|---|---|---|---|---|---|---|---|---|
| | | | | | mg/L | | | |
| Parting Shale | 317.1 | 232.0 | 18.11 | 15.74 | 56 | <0.01 | 2107.8 | 242.9 |
| Coal | 7.27 | 4.19 | 3.05 | 1.93 | 18 | 14.52 | 8.91 | 0.04 |
| | | | | | meq/L | | | |
| | Ca | Mg | Na | K | $HCO_3$ | Cl | $SO_4$ | $Fe^{+3}$ |
| Parting Shale | 15.82 | 19.09 | 0.79 | 0.40 | 0.92 | <0.01 | 43.88 | 8.70 |
| Coal | 0.36 | 0.34 | 0.13 | 0.05 | 0.30 | 0.41 | 0.09 | 0.001 |

# Appendix A

# Laboratory Reports

**BYU** *Laboratory of Isotope Geochemistry*
Department of Geological Sciences
BYU campus, Provo, Utah 84602
phone: (801) 422-3918

**Client:** Mayo and Associates
710 East 100 North
Lindon, UT 84042

Reporting Date: March 11, 2014
Analysis Date: March 7-11, 2014

Project: Deer Creek Mine—Mill Fork Area

**Water Parameter Experiments Collected from Flow-Through Cell**

3/7/2014 Raw Water

| | DO % | DO mg/L | Cond uS/cm | pH | ORP mV |
|---|---|---|---|---|---|
| 2 min | 57.6 | 6.23 | 786 | 7.16 | 57.9 |
| 4 min | 58.5 | 6.30 | 788 | 7.19 | 66.4 |
| 6 min | 58.9 | 6.32 | 790 | 7.19 | 69.3 |

3/7/2014 After Oxygenation (using lab air)

| | | | | | |
|---|---|---|---|---|---|
| 2 min | 72.9 | 7.32 | 855 | 7.82 | 97.4 |
| 4 min | 73.0 | 7.31 | 856 | 7.82 | 97.7 |
| 6 min | 74.3 | 7.42 | 858 | 7.81 | 98.0 |

3/11/2014 After slow bubbling all weekend using lab air

| | | | | | |
|---|---|---|---|---|---|
| 2 min | 67.4 | 5.81 | 931 | 8.29 | 93.8 |
| 4 min | 66.9 | 5.77 | 929 | 8.29 | 92.7 |
| 6 min | 66.5 | 5.73 | 928 | 8.30 | 91.3 |

**Eh Measurement**

| Jug #1 | Jug #2 |
|---|---|
| -190 | -109 |

DO—Dissolved Oxygen
Cond—Conductivity
ORP—Oxidation Reduction Potential
Eh—Oxidation-Reduction measured in volts

David G. Tingey
Research Professor

**BYU** *Laboratory of Isotope Geochemistry*
Department of Geological Sciences
BYU campus, Provo, Utah 84602
phone: (801) 422-3918

**Client:** Mayo and Associates
710 East 100 North
Lindon, UT 84042

Reporting Date: March 19, 2014
Analysis Date: March 17, 2014

Project: Deer Creek Mine—Mill Fork Area

## XRD results

- Iron Precipitate is composed of Geothite and/or Limonite
  - Chemical Formula of Geothite is FeO(OH)
  - Chemical Formula of Limonite is $FeO(OH) \cdot nH_20$
- Parting Shale $FeS_2$ is composed of 55% Pyrite and 45% Marcasite
- Igneous Dike $Fes_2$ is Pyrite
- Coal Cleat Faces $FeS_2$ is Pyrite

Analysis by Scintag Inc. Model 2000 XRD instrument.

David G. Tingey
Research Professor

**BYU** *Laboratory of Isotope Geochemistry*
Department of Geological Sciences
BYU campus, Provo, Utah 84602
phone: (801) 422-3918

**Client:** Mayo and Associates
710 East 100 North
Lindon, UT 84042

Reporting Date: April 11, 2014
Analysis Date: April 9, 2014

Project: Deer Creek Mine—Mill Fork Area

**Leach Experiment Procedure**

1. Water processing: Approximately 500 milliliters of ultrapure distilled water was boiled in a glass apparatus under an Argon atmosphere with Argon bubbling through the samples. This process was used to remove all dissolved Oxygen and to lower the Eh potential.
2. A sample from the parting collected by David Tingey was first washed to remove the mining rock dust ($CaCO_3$) and dried. The shale material was coarse-crushed to a size which would pass through a screen with a ½ inch opening (12.7 mm).
3. The procedure described in item 2 was done for the coal sample collected in the same location above the parting.
4. Both the crushed parting and coal samples (150 mg) where placed in 1 liter wide mouth polypropylene bottles. The atmosphere was purged from the bottle with Argon gas and the bottle was sealed.
5. After the leach water had boiled for 10 minutes, it was allowed to cool to room temperature while being maintained under an Argon atmosphere to prevent the introduction of Oxygen.
6. The leach water (150 milliliters) was quickly transferred into each 1 liter bottle. The bottles where again purged with Argon and sealed.
7. The 2 sample bottles where refrigerated so the reaction could happen at mine temperatures. The leaching experiment lasted for 48 hours after which the samples were filtered and analyzed for both anions and cations.

David G. Tingey
Research Professor

**BYU** *Laboratory of Isotope Geochemistry*
Department of Geological Sciences
BYU campus, Provo, Utah 84602
phone: (801) 422-3918

**Client:** Mayo and Associates
710 East 100 North
Lindon, UT 84042

Reporting Date: April 11, 2014
Analysis Date: April 9, 2014

Project: Deer Creek Mine—Mill Fork Area

**Leach Experiments continued: Parting Shale sample**

| **Cations** | mg/L | meq/L | |
|---|---|---|---|
| Calcium ($Ca^{++}$) | 317.1 | 15.82 | EPA Method: 215.1 |
| Magnesium ($Mg^{++}$) | 232.0 | 19.09 | EPA Method: 242.1 |
| Sodium ($Na^{+}$) | 18.11 | 0.79 | EPA Method: 273.1 |
| Potassium($K^{+}$) | 15.74 | 0.40 | EPA Method: 258.1 |
| Iron ($Fe^{++}$) | 242.9 | 8.70 | |
| **Anions** | | | |
| Bicarbonate ($HCO_3^-$) | 56.0 | 0.92 | |
| Fluoride ($F^-$) | < 0.01 | 0.00 | EPA Method: 300.0 |
| Chloride ($Cl^-$) | < 0.01 | 0.00 | EPA Method: 300.0 |
| Nitrate ($NO_3^-$) | < 0.01 | 0.00 | EPA Method: 300.0 |
| Bromide ($Br^-$) | < 0.01 | 0.00 | EPA Method: 300.0 |
| O-Phosphate ($HPO_4^{--}$) | < 0.01 | 0.00 | EPA Method: 300.0 |
| Sulfate ($SO_4^{--}$) | 2107.8 | 43.88 | EPA Method: 300.0 |
| | | | |
| **Cation/Anion Balance** | | | ASTM: D 596-83 |
| Total cations | | 44.80 | |
| Total anions | | 44.80 | |
| Percentage error (%) | | 0% | |

Cations were analyzed using Atomic Absorption and the EPA Methods listed above.
Anions were analyzed using Ion Chromatography and following EPA Method 300.0.
Bicarbonate was estimated as the difference.

David G. Tingey
Research Professor

**BYU** *Laboratory of Isotope Geochemistry*
Department of Geological Sciences
BYU campus, Provo, Utah 84602
phone: (801) 422-3918

**Client:** Mayo and Associates
710 East 100 North
Lindon, UT 84042

Reporting Date: April 11, 2014
Analysis Date: April 9, 2014

Project: Deer Creek Mine—Mill Fork Area

**Leach Experiments continued: Coal sample**

| **Cations** | mg/L | meq/L | |
|---|---|---|---|
| Calcium ($Ca^{++}$) | 7.27 | 0.36 | EPA Method: 215.1 |
| Magnesium ($Mg^{++}$) | 4.19 | 0.34 | EPA Method: 242.1 |
| Sodium ($Na^{+}$) | 3.05 | 0.13 | EPA Method: 273.1 |
| Potassium($K^{+}$) | 1.93 | 0.05 | EPA Method: 258.1 |
| Iron ($Fe^{++}$) | 0.04 | 0.00 | |
| **Anions** | | | |
| Bicarbonate ($HCO_3^-$) | 18 | 0.30 | EPA Method: 310.1 |
| Fluoride ($F^-$) | < 0.01 | 0.00 | EPA Method: 300.0 |
| Chloride ($Cl^-$) | 14.52 | 0.41 | EPA Method: 300.0 |
| Nitrate ($NO_3^-$) | < 0.01 | 0.00 | EPA Method: 300.0 |
| Bromide ($Br^-$) | 0.05 | 0.00 | EPA Method: 300.0 |
| O-Phosphate ($HPO_4^{--}$) | < 0.01 | 0.00 | EPA Method: 300.0 |
| Sulfate ($SO_4^{--}$) | 8.91 | 0.19 | EPA Method: 300.0 |
| | | | |
| **Cation/Anion Balance** | | | ASTM: D 596-83 |
| Total cations | | 0.89 | |
| Total anions | | 0.89 | |
| Percentage error (%) | | 0.01% | |

Cations were analyzed using Atomic Absorption and the EPA Methods listed above.
Anions were analyzed using Ion Chromatography and following EPA Method 300.0.
Bicarbonate was estimated as the difference.

David G. Tingey
Research Professor

# DEER CREEK MINE

# VOLUME 12

# MILL FORK LEASE

**R645-301-700**

**HYDROLOGY**

# APPENDIX D

**POST MINE CLOSURE HYDROLOGIC ANALYSIS**

- **Potential for Acid Mine Drainage (Peterson Hydrologic, 2016)**

PETERSEN HYDROLOGIC

15 December 2016

Mr. Charles Semborski, P.G.
Manager of Geology and Exploration
PacifiCorp – Interwest Mining Company
15 North Main Street
Huntington, Utah 84528

Chuck,

At your request, we have evaluated the potential for acid mine drainage to occur in Deer Creek Mine drainage water discharging from the Rilda Canyon portals. Our findings in this regard are summarized in this letter report.

**Introduction**

The Deer Creek Mine surface facilities are located in Deer Creek Canyon, approximately eight miles northwest of the town of Huntington, Utah (Figure 1). The mine is located in the Wasatch Plateau coal district of Emery County, Utah.

In December 2014, PacifiCorp announced that the Deer Creek Mine would be permanently closed. Currently, the mine is undergoing mine closure procedures. It has been projected that there will be permanent gravity discharges of intercepted mine

2695 N. 600 E. LEHI, UTAH 84043 (801) 766-4006

groundwater from the Deer Creek Mine from both the Deer Creek and Rilda Canyon portals. While the drainage that includes the Deer Creek portals is classified by the State of Utah as a Category 2 water, the drainage that includes the Rilda Canyon portals is classified as a Category 1 water. PacifiCorp currently holds UPDES discharge permits for the Deer Creek portals, but it is not possible to obtain a discharge permit for the Rilda Canyon portals because point source discharges into Category 1 waters are prohibited. Consequently, PacifiCorp plans to construct a buried pipeline to convey intercepted mine groundwater from the 1st Right portals in Rilda Canyon directly to the Huntington Power Plant where the water will be utilized in the operations at the plant.

The purpose of this investigation is to evaluate the potential for the generation of acid mine drainage (AMD) at the Rilda Canyon Portals at the Deer Creek Mine.

**Water Quality Characteristics of Potential Deer Creek Mine Discharge Water to the Rilda Canyon Portals**

PacifiCorp personnel have collected a large amount of water quality and water quantity data from the historic discharges of mine groundwaters from the Deer Creek Mine (UDOGM, 2016). Recent sampling (12 July 2016) and analysis of mine waters from the 11th West - 17th West panels sealed area (the groundwater projected to eventually discharge to the surface through the Rilda Canyon portals) has taken place (See Attachment E in the Deer Creek Mine Closure Water Pipeline Environmental Assessment, September 2016 for water quality sampling results).

It is noteworthy that both the historic Deer Creek Mine discharge waters and the recent 11th West – 17th West groundwaters are *not* acidic in nature, but rather are consistently neutral to slightly alkaline as reflected by pH levels. The neutral to slightly alkaline character of these waters is as anticipated given the hydrogeochemical regime of the Deer Creek Mine as will be discussed in the following section of this report. The analytical

results from the long-list sampling of EPA priority contaminants of the 11th West – 17th West groundwater demonstrate the absence of elevated levels of these contaminants in the water that is projected to eventually report to the Rilda Canyon portals. The total dissolved solids (TDS) concentration of the 11th West – 17th West water sampled on that date was 489 mg/L. The total iron concentration measured in the 11th West – 17th West sample was 1.35 mg/L, which is marginally above a 1.0 mg/L discharge limit. PacifiCorp reports that the total iron concentrations in groundwater from the 11th West – 17th West area has been declining gradually over time. It is noted that the dissolved iron concentration of the water was below the laboratory detection limit (<0.03 mg/L), indicating that the iron detected in the total iron analysis occurs as solid particulate matter rather than ionic iron dissolved in the groundwater. The 11th West – 17th West groundwater contains similar amounts of calcium, magnesium, and sodium cations (when expressed as milliequivalents per liter) with bicarbonate being the dominant anion.

It should be noted that the mine water that will potentially be discharged from the Rilda Canyon portal pipeline (11th West – 17th West groundwater) has erroneously been referred to as "highly contaminated acid mine drainage". As noted above, the water is *not* acidic but rather is neutral to moderately alkaline. Additionally, the groundwater is not contaminated with any of the EPA priority contaminants and the overall water quality as reflected by the TDS concentrations is good. As a reference, the 11th West – 17th West groundwater would not be unsuitable for use as drinking water per U.S. EPA drinking water standards. Additionally, the 11th West – 17th West water does not exceed the more stringent Utah water quality standards for aquatic life. Furthermore, the 489 mg/L TDS concentration does not exceed the TDS limitation set forth in the Colorado River Salinity Forum.

It should be emphasized that the water from the Deer Creek Mine Rilda Canyon pipeline is planned to be used/consumed in connection with operations at the Huntington Power Plant rather than discharging the water to receiving surface-water systems.

**Potential for Acid Mine Drainage from the Rilda Canyon Portals**

Acid mine drainage is rare in the coal fields of the western United States (Mayo et al, 2000). It is projected that acid mine drainage will not occur at the Deer Creek Mine discharge. The basis for this conclusion is discussed below.

AMD is associated with the oxidation of sulfide minerals (commonly pyrite) in the presence of water and oxygen.

This reaction may be expressed as:

$$FeS_{2\,(S)} + 7/2\ O_2 + H_2O = Fe^{2+} + 2SO_4^{2-} + 2H^+ \quad \text{(pyrite oxidation)}$$

This reaction yields free, reduced iron ($Fe^{2+}$), sulfate, and $H^+$ (acid), and removes oxygen from the water.

Water flowing in a surface stream that is fully aerated with near neutral pH generally will generally not contain more than a few micrograms per liter of dissolved iron (Hem, 1985). This is because oxygen is continuously present in an actively flowing stream and the $Fe^{2+}$ is rapidly oxidized to $Fe^{3+}$ according to:

$$Fe^{2+} + 1/4\ O_2 + H^+ = Fe^{3+} + 1/2\ H_2O \quad \text{(iron oxidation)}$$

The oxidized iron is subsequently precipitated as a solid (commonly as an amorphous iron hydroxide) which eventually settles to the bottom of the water body. This simplified reaction may be expressed as:

$$Fe^{3+} + 3H_2O = Fe(OH)_{3(s)} + 3H^+ \quad \text{(iron hydroxide precipitation)}$$

The liberation of $H^+$ in this reaction results in a temporary lowering of the pH and facilitates the dissolution of carbonate minerals according to:

$$H^+ + CaCO_3 = Ca^{2+} + HCO_3^- \quad \text{(calcite dissolution)}$$
$$2H^+ + CaMg(CO_3)_2 = Ca^{2+} + Mg^{2+} + 2HCO_3 \quad \text{(dolomite dissolution)}$$

These two reactions result in an increase in the calcium, magnesium, and bicarbonate concentrations of the water and consume $H^+$, resulting in a rising of the pH (the water becoming increasingly less acidic). Because of the abundance of carbonate minerals in the coal fields of the western United States (Mayo et al, 2000), the acid produced from pyrite oxidation is readily consumed in the reactions described above and acid-mine-drainage does not occur.

In the Eastern and Interior Coal Provinces of the United States, coal mine drainage problems can occur as a result of the combined effects of abundant iron disulfide minerals and low background solute concentrations of many streams and groundwaters (Mayo et al, 2000). The low solute concentrations in Eastern waters are due largely to high rates of meteoric precipitation which have previously flushed soluble minerals from the soil and bedrock. Without the neutralization effect of soluble carbonate minerals, acid mine drainage may occur. In contrast, the geochemical environments of the coal fields of the Western United States are such that coal mine drainage generally does not contain AMD and associated elevated concentrations of iron and manganese (Mayo et al, 2000). Largely because western region coal mining regions are generally dryer than are the Interior and Eastern coal mining regions, soluble carbonate minerals such as limestone are usually available for neutralizing AMD. Because of the pervasiveness of carbonate minerals in the mine environment, oxidized iron may precipitate in the neutral pH water prior to leaving the mine (Mayo et al, 2000).

It is noted that Mayo et al (2000) investigated the chemical evolution of coal mine drainage in a non-acid producing environment in Utah's Wasatch Plateau coal field. The

investigation performed by Mayo et al (2000) was performed at the non-acid producing Canyon Fuel Company, LLC Sufco Mine which is located in the same Wasatch Plateau coal field about 25 miles south of the Deer Creek Mine. The mining techniques utilized at the Sufco Mine (longwall mining production with continuous mining development entries) are similar to those that were employed at the Deer Creek Mine. The mining activities at both mines occurred in the generally low-sulfur, bituminous coal seams contained in the lower portions of the Cretaceous Blackhawk Formation. The historic absence of AMD discharges at the Sufco mine are supportive of the conclusion that AMD in Deer Creek Mine discharge will likewise not occur.

While AMD is not anticipated in the Deer Creek Mine discharge, the results of total iron analysis from the 12 July 2016 11$^{th}$ West – 17$^{th}$ West panels area does indicate the presence of total iron in the water at a concentration of 1.35 mg/L. The source of the iron in that groundwater is likely the oxidation of pyrite in flooded, oxygenated portions of the Deer Creek Mine as described above. The presence of total iron in the 12 July 2016 11$^{th}$ West – 17$^{th}$ West sample, while dissolved iron was absent, indicates that the total iron consists of only solid iron particulate in the water (i.e. the iron has been oxidized to $Fe^{3+}$ and subsequently precipitated from solution, likely as iron hydroxide prior to the water reaching the underground sampling location). Similar conditions were observed at the nearby Genwal Resources, Inc. Crandall Canyon Mine, which is located immediately north of the Deer Creek Mine permit area. After gravity discharge at the Crandall Canyon Mine first commenced in 2008, iron was found to be present in the discharge water. The total iron concentration in the Crandall Canyon Mine discharge water peaked in late 2009/early 2010 at concentrations greater than 5 milligrams per liter. Subsequently, the total iron concentrations decreased gradually over the following several years. Current total iron concentrations in the Crandall Canyon Mine discharge are now near 1.0 mg/L (UDOGM, 2016). The cause of the decreasing iron concentrations over time is believed to be related to the oxidation of available pyrite with available dissolved oxygen in the flooded portions of the mine and the subsequent flushing of the total iron reaction products from the underground mine workings by

actively flowing mine waters. Discharge waters from the Crandall Canyon Mine have been neutral to slightly alkaline as are groundwaters recently sampled at the 11th West – 17th West panels area at the Deer Creek Mine. Given the similarities of the Deer Creek mine environment and the adjacent Crandall Canyon Mine environment (where AMD has not occurred and total iron concentrations have gradually declined to low levels over time), it is anticipated that similar occurrences will be observed in the future at the Deer Creek Mine Rilda Canyon portals.

**Conclusions**

Based on the information provided to me and the analysis presented in this document, it is my professional opinion that acid mine drainage will not be of concern in the discharge from the Deer Creek Mine Rilda Canyon portals.

**References Cited**

Hem, 1985, Study and Interpretation of the Chemical Characteristics of Natural Water, United States Geological Survey Water-Supply Paper 2254.

Mayo, A.L., Petersen, E.C., and Kravits, C, 2000, Chemical evolution of coal mine drainage in a non-acid producing environment, Wasatch Plateau, Utah, USA, Journal of Hydrology 236 (2000) 1-16, Elsevier Science, B.V.

Utah Division of Oil, Gas and Mining, 2016, Utah Coal Mining Water Quality Database, available on-line at http://linux3.ogm.utah.gov/WebStuff/wwwroot/wqdb.html.

Please feel free to contact me should you have any questions in this regard.

Sincerely,

Erik C. Petersen, P.G.
Principal Hydrogeologist
Utah PG #5373615-2250

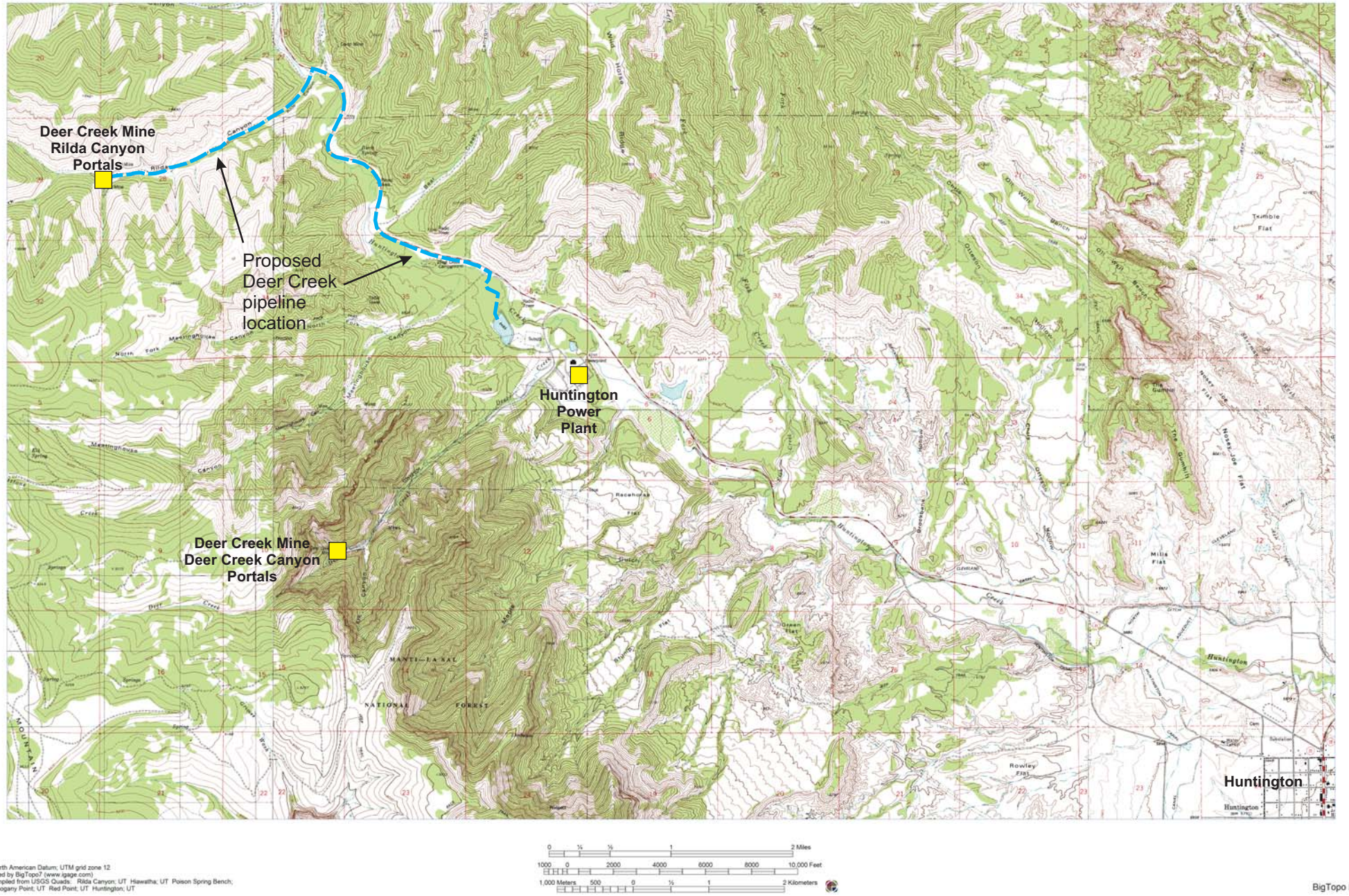


Figure 1 Deer Creek Mine location map.

# DEER CREEK MINE

# VOLUME 12

# MILL FORK LEASE

**R645-301-700**

**HYDROLOGY**

# APPENDIX D

**POST MINE CLOSURE HYDROLOGIC ANALYSIS**

- **Iron Blending Sensitivity Analysis**
  - **Base Case 11th – 17th West**
  - **Base Case at Raw Water Pond @ 7,000 gpm Diversion**
  - **Base Case at Raw Water Pond @ 3,500 gpm Diversion**
  - **11th – 17th West and 7th North Total Iron Blending**
  - **Base Case at Raw Water Pond @ 7,000 gpm Diversion**
  - **Base Case at Raw Water Pond @ 3,500 gpm Diversion**

# BASE CASE
# 11th - 17th West Flow Rate @ 300 gpm (based on mine monitoring)
# No Flow from 7th North Sealed Area

**Deer Creek Mine**
**Projected Mine Water Discharge Quality**
**11th - 17th West Total Iron @ 1.0 mg/L Start Value**

**Start Date: 4/1/2017**
**Total Iron Regression formula: Y = - 0.0014X + 60.628** See note #3
**Iron Regression start 4/1/2012 (3.23 = 41000*0.0014 + 60.628)**

**Flow Reduction 50%**
**Total Iron Reduction:**
**11th - 17th West 20%**

**Date: 4/1/2019 Number of days 730**
**Iron Regression start 4/1/2014 (2.20 = 41730*0.0014 + 60.628)**

**Flow Reduction 10%**
**Total Iron Reduction:**
**11th - 17th West 20%**

**Date: 4/1/2021 Number of days 1461**
**Iron Regression start 4/1/2016 (1.18 = 42461*0.0014 + 60.628)**

## 11th - 17th West Sealed Area

| Flow Rate #1 | Flow GPM | Total Iron mg/L | Weighted Average Total Iron mg/L |
|---|---|---|---|
| 11th - 17th West See Note #1 | 300 | 1.0 | 1.00 |
| 7th North XC-39 See Note #2 | 0 | 3.23 | |
| Total | 300 | | |

| Flow Rate #2 | Flow GPM | Total Iron mg/L | Weighted Average Total Iron mg/L |
|---|---|---|---|
| | 250 | 1.0 | 1.00 |
| 7th North XC-39 See Note #2 | 0 | 3.23 | |
| Total | 250 | | |

| Flow Rate #3 | Flow GPM | Total Iron mg/L | Weighted Average Total Iron mg/L |
|---|---|---|---|
| 11th - 17th West | 200 | 1.0 | 1.00 |
| 7th North XC-39 See Note #2 | 0 | 3.23 | |
| Total | 200 | | |

## Two Years of Discharging from of 11th - 17th West Sealed Area

| | Flow GPM | Total Iron mg/L | Weighted Average Total Iron mg/L |
|---|---|---|---|
| 11th - 17th West | 150 | 0.8 | 0.80 |
| 7th North XC-39 | 0 | 2.2 | |
| Total | 150 | | |

| | Flow GPM | Total Iron mg/L | Weighted Average Total Iron mg/L |
|---|---|---|---|
| 11th - 17th West | 125 | 0.8 | 0.80 |
| 7th North XC-39 | 0 | 2.2 | |
| Total | 125 | | |

| | Flow GPM | Total Iron mg/L | Weighted Average Total Iron mg/L |
|---|---|---|---|
| 11th - 17th West | 100 | 0.8 | 0.80 |
| 7th North XC-39 | 0 | 2.2 | |
| Total | 100 | | |

## Four Years of Discharging from of 11th - 17th West Sealed Area

| | Flow GPM | Total Iron mg/L | Weighted Average Total Iron mg/L |
|---|---|---|---|
| 11th - 17th West | 135 | 0.64 | 0.64 |
| 7th North XC-39 | 0 | 1.18 | |
| Total | 135 | | |

| | Flow GPM | Total Iron mg/L | Weighted Average Total Iron mg/L |
|---|---|---|---|
| 11th - 17th West | 112.5 | 0.64 | 0.64 |
| 7th North XC-39 | 0 | 1.18 | |
| Total | 112.5 | | |

| | Flow GPM | Total Iron mg/L | Weighted Average Total Iron mg/L |
|---|---|---|---|
| 11th - 17th West | 90 | 0.64 | 0.64 |
| 7th North XC-39 | 0 | 1.18 | |
| Total | 90 | | |

Assumptions

- 11th West - 17th West flow rate 300 gpm
- Flow rate from 7th North seals varies from 300 gpm to 100 gpm
- 11th West - 17th West seals total iron dissipates slowly from 1.0 mg/L 20% reduction/2 years
- Flow decreases approximately 50% after two years, then decreases 5%/year

Note #1 11th - 17th West reduces 20%/2 years

Note #2 No flow from 7th North XC-39 sealed area

Note #3 Regression formula based on sampling results from 11th - 17th West

# BASE CASE
# 11th - 17th West Flow Rate @ 300 gpm (based on mine monitoring)
# No Flow from 7th North Sealed Area

**Deer Creek Mine**
**Projected Mine Water Discharge Quality**

**11th - 17th West Total Iron @ 0.8 mg/L Start Value**

**Start Date** **4/1/2017**
**Total Iron Regression formula:** **Y = - 0.0014X + 60.628** See note #3
**Iron Regression start 4/1/2012 (3.23 = 41000*0.0014 + 60.628)**

**Flow Reduction 50%**
**Total Iron Reduction:**
**11th - 17th West 20%**

**Date:** **4/1/2019** **Number of days** **730**

**Iron Regression start 4/1/2014 (2.20 = 41730*0.0014 + 60.628)**

**Flow Reduction 10%**
**Total Iron Reduction:**
**11th - 17th West 20%**

**Date:** **4/1/2021** **Number of days** **1461**

**Iron Regression start 4/1/2016 (1.18 = 42461*0.0014 + 60.628)**

### 11th - 17th West Sealed Area

| Flow Rate #1 | Flow GPM | Total Iron mg/L | Weighted Average Total Iron mg/L |
|---|---|---|---|
| 11th - 17th West See Note #1 | 300 | 0.8 | 0.80 |
| 7th North XC-39 See Note #2 | 0 | 3.23 | |
| Total | 300 | | |

| Flow Rate #2 | Flow GPM | Total Iron mg/L | Weighted Average Total Iron mg/L |
|---|---|---|---|
| 11th - 17th West | 250 | 0.8 | 0.80 |
| 7th North XC-39 | 0 | 3.23 | |
| Total | 250 | | |

| Flow Rate #3 | Flow GPM | Total Iron mg/L | Weighted Average Total Iron mg/L |
|---|---|---|---|
| 11th - 17th West | 200 | 0.8 | 0.80 |
| 7th North XC-39 | 0 | 3.23 | |
| Total | 200 | | |

### Two Years of Discharging from of 11th - 17th West Sealed Area

| | Flow GPM | Total Iron mg/L | Weighted Average Total Iron mg/L |
|---|---|---|---|
| 11th - 17th West | 150 | 0.6 | 0.64 |
| 7th North XC-39 | 0 | 2.2 | |
| Total | 150 | | |

| | Flow GPM | Total Iron mg/L | Weighted Average Total Iron mg/L |
|---|---|---|---|
| 11th - 17th West | 125 | 0.6 | 0.64 |
| 7th North XC-39 | 0 | 2.2 | |
| Total | 125 | | |

| | Flow GPM | Total Iron mg/L | Weighted Average Total Iron mg/L |
|---|---|---|---|
| 11th - 17th West | 100 | 0.6 | 0.64 |
| 7th North XC-39 | 0 | 2.2 | |
| Total | 100 | | |

### Four Years of Discharging from of 11th - 17th West Sealed Area

| | Flow GPM | Total Iron mg/L | Weighted Average Total Iron mg/L |
|---|---|---|---|
| 11th - 17th West | 135 | 0.51 | 0.51 |
| 7th North XC-39 | 0 | 1.18 | |
| Total | 135 | | |

| | Flow GPM | Total Iron mg/L | Weighted Average Total Iron mg/L |
|---|---|---|---|
| 11th - 17th West | 112.5 | 0.51 | 0.51 |
| 7th North XC-39 | 0 | 1.18 | |
| Total | 112.5 | | |

| | Flow GPM | Total Iron mg/L | Weighted Average Total Iron mg/L |
|---|---|---|---|
| 11th - 17th West | 90 | 0.51 | 0.51 |
| 7th North XC-39 | 0 | 1.18 | |
| Total | 90 | | |

Assumptions

- 11th West - 17th West flow rate 300 gpm
- Flow rate from 7th North seals varies from 300 gpm to 100 gpm
- 11th West - 17th West seals total iron dissipates slowly from 1.0 mg/L 20% reduction/2 years
- Flow decreases approximately 50% after two years, then decreases 5%/year

Note #1 11th - 17th West reduces 20%/2 years
No flow from 7th North XC-39 sealed area

Note #2 Regression formula based on sampling results from 11th - 17th

Note #3 West

# BASE CASE
# 11th - 17th West Flow Rate @ 300 gpm (based on mine monitoring)
# No Flow from 7th North Sealed Area

**Deer Creek Mine**
**Projected Mine Water Discharge Quality**
**11th - 17th West Total Iron @ 0.6 mg/L Start Value**

**Start Date** 4/1/2017
**Total Iron Regression formula:** Y = - 0.0014X + 60.628 [See note #3]
**Iron Regression start 4/1/2012 (3.23 = 41000*0.0014 + 60.628)**

**Flow Reduction 50%**
**Total Iron Reduction:**
**11th - 17th West 20%**

**Date:** 4/1/2019 **Number of days** 730
**Iron Regression start 4/1/2014 (2.20 = 41730*0.0014 + 60.628)**

**Flow Reduction 10%**
**Total Iron Reduction:**
**11th - 17th West 20%**

**Date:** 4/1/2021 **Number of days** 1461
**Iron Regression start 4/1/2016 (1.18 = 42461*0.0014 + 60.628)**

## 11th - 17th West Sealed Area

| Flow Rate #1 | Flow GPM | Total Iron mg/L | Weighted Average Total Iron mg/L |
|---|---|---|---|
| 11th - 17th West [See Note #1] | 300 | 0.6 | 0.60 |
| 7th North XC-39 [See Note #2] | 0 | 3.23 | |
| Total | 300 | | |

| Flow Rate #2 | Flow GPM | Total Iron mg/L | Weighted Average Total Iron mg/L |
|---|---|---|---|
| 11th - 17th West | 250 | 0.6 | 0.60 |
| 7th North XC-39 | 0 | 3.23 | |
| Total | 250 | | |

| Flow Rate #3 | Flow GPM | Total Iron mg/L | Weighted Average Total Iron mg/L |
|---|---|---|---|
| 11th - 17th West | 200 | 0.6 | 0.60 |
| 7th North XC-39 | 0 | 3.23 | |
| Total | 200 | | |

## Two Years of Discharging from of 11th - 17th West Sealed Area

| | Flow GPM | Total Iron mg/L | Weighted Average Total Iron mg/L |
|---|---|---|---|
| 11th - 17th West | 150 | 0.5 | 0.48 |
| 7th North XC-39 | 0 | 2.2 | |
| Total | 150 | | |

| | Flow GPM | Total Iron mg/L | Weighted Average Total Iron mg/L |
|---|---|---|---|
| 11th - 17th West | 125 | 0.5 | 0.48 |
| 7th North XC-39 | 0 | 2.2 | |
| Total | 125 | | |

| | Flow GPM | Total Iron mg/L | Weighted Average Total Iron mg/L |
|---|---|---|---|
| 11th - 17th West | 100 | 0.5 | 0.48 |
| 7th North XC-39 | 0 | 2.2 | |
| Total | 100 | | |

## Four Years of Discharging from of 11th - 17th West Sealed Area

| | Flow GPM | Total Iron mg/L | Weighted Average Total Iron mg/L |
|---|---|---|---|
| 11th - 17th West | 135 | 0.38 | 0.38 |
| 7th North XC-39 | 0 | 1.18 | |
| Total | 135 | | |

| | Flow GPM | Total Iron mg/L | Weighted Average Total Iron mg/L |
|---|---|---|---|
| 11th - 17th West | 112.5 | 0.38 | 0.38 |
| 7th North XC-39 | 0 | 1.18 | |
| Total | 112.5 | | |

| | Flow GPM | Total Iron mg/L | Weighted Average Total Iron mg/L |
|---|---|---|---|
| 11th - 17th West | 90 | 0.38 | 0.38 |
| 7th North XC-39 | 0 | 1.18 | |
| Total | 90 | | |

Assumptions

- 11th West - 17th West flow rate 300 gpm
- Flow rate from 7th North seals varies from 300 gpm to 100 gpm
- 11th West - 17th West seals total iron dissipates slowly from 0.6 mg/L
- Flow decreases approximately 50% after two years, then decreases 5%/year

Note #1 11th - 17th West reduces 20%/2 years
No flow from 7th North XC-39 sealed area

Note #2

Note #3 Regression formula based on sampling results from 11th - 17th West

# BASE CASE
# 11th - 17th West Flow Rate @ 300 gpm (based on mine monitoring)
# No Flow from 7th North Sealed Area
# Total Diversion to Raw Water Pond Average 7,000 gpm

**Deer Creek Mine**
**Projected Raw Water Pond Blending Quality**
**11th - 17th West Total Iron @ 1.0 mg/L Start Value**

**Raw Water Pond Total Iron @ 0.48 mg/L** See Note 1
**Total Diversion to Raw Water Pond Average 7,000 gpm**

**Flow Reduction 50%**
**Total Iron Reduction:**
**11th - 17th West 20%**

**Date:** 4/1/2019 **Number of days** 730

**Flow Reduction 50%**
**Total Iron Reduction:**
**11th - 17th West 20%**

**Date:** 4/1/2021 **Number of days** 1461

## 11th - 17th West Sealed Area

| Flow Rate #1 | Flow GPM | Total Iron mg/L | Weighted Average Total Iron mg/L |
|---|---|---|---|
| Rilda Canyon Mine Discharge | 300 | 1.00 | 0.50 |
| Huntington River See Note 1 | 6700 | 0.48 | |
| Total | 7000 | | |

| Flow Rate #2 | Flow GPM | Total Iron mg/L | Weighted Average Total Iron mg/L |
|---|---|---|---|
| Rilda Canyon Mine Discharge | 250 | 1.00 | 0.50 |
| Huntington River See Note 1 | 6700 | 0.48 | |
| Total | 6950 | | |

| Flow Rate #3 | Flow GPM | Total Iron mg/L | Weighted Average Total Iron mg/L |
|---|---|---|---|
| Rilda Canyon Mine Discharge | 200 | 1.00 | 0.49 |
| Huntington River See Note 1 | 6800 | 0.48 | |
| Total | 7000 | | |

Assumptions

•Rilda Canyon Mine Discharge varies from 600 to 400 gpm
•Huntington River Diversion varies from 6700 gpm to 6800 gpm
•Rilda Canyon Mine Discharge total iron dissipates slowly from 1.0 mg/L
•Flow decreases approximately 50% after two years, then decreases 5%/year
Note[1] Huntington River HCC01 average total iron 0.48 mg/L (1990 - 2016)

## Two Years after Discharging from Sealed Areas

| | Flow GPM | Total Iron mg/L | Weighted Average Total Iron mg/L |
|---|---|---|---|
| Rilda Canyon Mine Discharge | 150 | 0.80 | 0.49 |
| Huntington River See Note 1 | 6850 | 0.48 | |
| Total | 7000 | | |

| | Flow GPM | Total Iron mg/L | Weighted Average Total Iron mg/L |
|---|---|---|---|
| Rilda Canyon Mine Discharge | 125 | 0.80 | 0.49 |
| Huntington River See Note 1 | 6875 | 0.48 | |
| Total | 7000 | | |

| | Flow GPM | Total Iron mg/L | Weighted Average Total Iron mg/L |
|---|---|---|---|
| Rilda Canyon Mine Discharge | 100 | 0.80 | 0.48 |
| Huntington River See Note 1 | 6900 | 0.48 | |
| Total | 7000 | | |

Assumptions

•Rilda Canyon Mine Discharge varies from 600 to 400 gpm
•Huntington River Diversion varies from 6850 gpm to 6900 gpm
•Rilda Canyon Mine Discharge total iron dissipates slowly from 0.80 mg/L
•Flow decreases approximately 50% after two years, then decreases 5%/year
Note[1] Huntington River HCC01 average total iron 0.48 mg/L (1990 - 2016)

## Four Years after Discharging from Sealed Areas

| | Flow GPM | Total Iron mg/L | Weighted Average Total Iron mg/L |
|---|---|---|---|
| Rilda Canyon Mine Discharge | 135 | 0.64 | 0.48 |
| Huntington River See Note 1 | 6865 | 0.48 | |
| Total | 7000 | | |

| | Flow GPM | Total Iron mg/L | Weighted Average Total Iron mg/L |
|---|---|---|---|
| Rilda Canyon Mine Discharge | 112.5 | 0.64 | 0.48 |
| Huntington River See Note 1 | 6887.5 | 0.48 | |
| Total | 7000 | | |

| | Flow GPM | Total Iron mg/L | Weighted Average Total Iron mg/L |
|---|---|---|---|
| Rilda Canyon Mine Discharge | 90 | 0.64 | 0.48 |
| Huntington River See Note 1 | 6910 | 0.48 | |
| Total | 7000 | | |

Assumptions

•Rilda Canyon Mine Discharge varies from 600 to 400 gpm
•Huntington River Diversion varies from 6865 gpm to 6910 gpm
•Rilda Canyon Mine Discharge total iron dissipates slowly from 0.64 mg/L
•Flow decreases approximately 50% after two years, then decreases 5%/year
Note[1] Huntington River HCC01 average total iron 0.48 mg/L (1990 - 2016)

# BASE CASE
# 11th - 17th West Flow Rate @ 300 gpm (based on mine monitoring)
# No Flow from 7th North Sealed Area
# Total Diversion to Raw Water Pond Average 7,000 gpm

**Deer Creek Mine**
**Projected Raw Water Pond Blending Quality**

**11th - 17th West Total Iron @ 1.0 mg/L Start Value**
**Raw Water Pond Total Iron @ 0.2 mg/L** See Note 2
**Total Diversion to Raw Water Pond Average 7,000 gpm**

**Flow Reduction 50%**
**Total Iron Reduction:**
**11th - 17th West 20%**
**7th North XC-39 Regression Formula**

**Date:** **4/1/2019** **Number of days** **730**

**Flow Reduction 50%**
**Total Iron Reduction:**
**11th - 17th West 20%**
**7th North XC-39 Regression Formula**

**Date:** **4/1/2021** **Number of days** **1461**

### 11th - 17th West Sealed Area

| | Flow GPM | Total Iron mg/L | Weighted Average Total Iron mg/L |
|---|---|---|---|
| Rilda Canyon Mine Discharge | 300 | 1.00 | 0.23 |
| Huntington River See Note 2 | 6700 | 0.2 | |
| Total | 7000 | | |

| | Flow GPM | Total Iron mg/L | Weighted Average Total Iron mg/L |
|---|---|---|---|
| Rilda Canyon Mine Discharge | 250 | 1.00 | 0.23 |
| Huntington River See Note 2 | 6750 | 0.2 | |
| Total | 7000 | | |

| | Flow GPM | Total Iron mg/L | Weighted Average Total Iron mg/L |
|---|---|---|---|
| Rilda Canyon Mine Discharge | 200 | 1.00 | 0.22 |
| Huntington River See Note 2 | 6800 | 0.2 | |
| Total | 7000 | | |

Assumptions

•Rilda Canyon Mine Discharge varies from 600 to 400 gpm
•Huntington River Diversion varies from 6700 gpm to 6800 gpm
•Rilda Canyon Mine Discharge total iron dissipates slowly from 1.0 mg/L
•Flow decreases approximately 50% after two years, then decreases 5%/year
Note[2] Raw Water Pond plant intake sampling average total iron 0.2 mg/L (2016)

### Two Years after Discharging from Sealed Areas

| | Flow GPM | Total Iron mg/L | Weighted Average Total Iron mg/L |
|---|---|---|---|
| Rilda Canyon Mine Discharge | 150 | 0.80 | 0.21 |
| Huntington River See Note 2 | 6850 | 0.2 | |
| Total | 7000 | | |

| | Flow GPM | Total Iron mg/L | Weighted Average Total Iron mg/L |
|---|---|---|---|
| Rilda Canyon Mine Discharge | 125 | 0.80 | 0.21 |
| Huntington River See Note 2 | 6875 | 0.2 | |
| Total | 7000 | | |

| | Flow GPM | Total Iron mg/L | Weighted Average Total Iron mg/L |
|---|---|---|---|
| Rilda Canyon Mine Discharge | 100 | 0.80 | 0.21 |
| Huntington River See Note 2 | 6900 | 0.2 | |
| Total | 7000 | | |

Assumptions

•Rilda Canyon Mine Discharge varies from 600 to 400 gpm
•Huntington River Diversion varies from 6700 gpm to 6900 gpm
•Rilda Canyon Mine Discharge total iron dissipates slowly from 0.80 mg/L
•Flow decreases approximately 50% after two years, then decreases 5%/year
Note[2] Raw Water Pond plant intake sampling average total iron 0.2 mg/L (2016)

### Four Years after Discharging from Sealed Areas

| | Flow GPM | Total Iron mg/L | Weighted Average Total Iron mg/L |
|---|---|---|---|
| Rilda Canyon Mine Discharge | 135 | 0.64 | 0.21 |
| Huntington River See Note 2 | 6865 | 0.2 | |
| Total | 7000 | | |

| | Flow GPM | Total Iron mg/L | Weighted Average Total Iron mg/L |
|---|---|---|---|
| Rilda Canyon Mine Discharge | 112.5 | 0.64 | 0.21 |
| Huntington River See Note 2 | 6887.5 | 0.2 | |
| Total | 7000 | | |

| | Flow GPM | Total Iron mg/L | Weighted Average Total Iron mg/L |
|---|---|---|---|
| Rilda Canyon Mine Discharge | 90 | 0.64 | 0.21 |
| Huntington River See Note 2 | 6910 | 0.2 | |
| Total | 7000 | | |

Assumptions

•Rilda Canyon Mine Discharge varies from 600 to 400 gpm
•Huntington River Diversion varies from 6730 gpm to 6820 gpm
•Rilda Canyon Mine Discharge total iron dissipates slowly from 0.64 mg/L
•Flow decreases approximately 50% after two years, then decreases 5%/year
Note[2] Raw Water Pond plant intake sampling average total iron 0.2 mg/L (2016)

# BASE CASE
# 11th - 17th West Flow Rate @ 300 gpm (based on mine monitoring)
# No Flow from 7th North Sealed Area
# Total Diversion to Raw Water Pond Average 3,500 gpm

**Deer Creek Mine**
**Projected Raw Water Pond Blending Quality**
**11th - 17th West Total Iron @ 1.0 mg/L Start Value**

**Raw Water Pond Total Iron @ 0.48 mg/L** See Note 1
**Total Diversion to Raw Water Pond Average 3,500 gpm**

**Flow Reduction 50%**
**Total Iron Reduction:**
**11th - 17th West 20%**
**Date:** 4/1/2019 **Number of days** 730

**Flow Reduction 50%**
**Total Iron Reduction:**
**11th - 17th West 20%**
**Date:** 4/1/2021 **Number of days** 1461

## 11th - 17th West Sealed Area

| | Flow GPM | Total Iron mg/L | Weighted Average Total Iron mg/L |
|---|---|---|---|
| Rilda Canyon Mine Discharge | 300 | 1.00 | 0.52 |
| Huntington River See Note 1 | 3200 | 0.48 | |
| Total | 3500 | | |

| | Flow GPM | Total Iron mg/L | Weighted Average Total Iron mg/L |
|---|---|---|---|
| Rilda Canyon Mine Discharge | 250 | 1.00 | 0.52 |
| Huntington River See Note 1 | 3250 | 0.48 | |
| Total | 3500 | | |

| | Flow GPM | Total Iron mg/L | Weighted Average Total Iron mg/L |
|---|---|---|---|
| Rilda Canyon Mine Discharge | 200 | 1.00 | 0.51 |
| Huntington River See Note 1 | 3300 | 0.48 | |
| Total | 3500 | | |

Assumptions

- Rilda Canyon Mine Discharge varies from 300 to 200 gpm
- 11th W - 17th W flow varies 300 gpm to 200 gpm
- Huntington River Diversion varies from 3200 gpm to 3300 gpm
- Rilda Canyon Mine Discharge total iron dissipates slowly from 2.5 mg/L
- Flow decreases approximately 50% after two years, then decreases 5%/year

Note[1] Huntington River HCC01 average total iron 0.48 mg/L

## Two Years after Discharging from Sealed Areas

| | Flow GPM | Total Iron mg/L | Weighted Average Total Iron mg/L |
|---|---|---|---|
| Rilda Canyon Mine Discharge | 150 | 0.80 | 0.49 |
| Huntington River See Note 1 | 3350 | 0.48 | |
| Total | 3500 | | |

| | Flow GPM | Total Iron mg/L | Weighted Average Total Iron mg/L |
|---|---|---|---|
| Rilda Canyon Mine Discharge | 125 | 0.80 | 0.49 |
| Huntington River See Note 1 | 3375 | 0.48 | |
| Total | 3500 | | |

| | Flow GPM | Total Iron mg/L | Weighted Average Total Iron mg/L |
|---|---|---|---|
| Rilda Canyon Mine Discharge | 100 | 0.80 | 0.49 |
| Huntington River See Note 1 | 3400 | 0.48 | |
| Total | 3500 | | |

Assumptions

- Rilda Canyon Mine Discharge varies from 150 to 100 gpm
- Huntington River Diversion varies from 3350 gpm to 3400 gpm
- Rilda Canyon Mine Discharge total iron dissipates slowly from 2.5 mg/L
- Flow decreases approximately 50% after two years, then decreases 5%/year

Note[1] Huntington River HCC01 average total iron 0.48 mg/L

## Four Years after Discharging from Sealed Areas

| | Flow GPM | Total Iron mg/L | Weighted Average Total Iron mg/L |
|---|---|---|---|
| Rilda Canyon Mine Discharge | 135 | 0.64 | 0.49 |
| Huntington River See Note 1 | 3365 | 0.48 | |
| Total | 3500 | | |

| | Flow GPM | Total Iron mg/L | Weighted Average Total Iron mg/L |
|---|---|---|---|
| Rilda Canyon Mine Discharge | 112.5 | 0.64 | 0.49 |
| Huntington River See Note 1 | 3387.5 | 0.48 | |
| Total | 3500 | | |

| | Flow GPM | Total Iron mg/L | Weighted Average Total Iron mg/L |
|---|---|---|---|
| Rilda Canyon Mine Discharge | 90 | 0.64 | 0.48 |
| Huntington River See Note 1 | 3410 | 0.48 | |
| Total | 3500 | | |

Assumptions

- Rilda Canyon Mine Discharge varies from 135 to 90 gpm
- Huntington River Diversion varies from 3365 gpm to 3410 gpm
- Rilda Canyon Mine Discharge total iron dissipates slowly from 2.5 mg/L
- Flow decreases approximately 50% after two years, then decreases 5%/year

Note[1] Huntington River HCC01 average total iron 0.48 mg/L

# BASE CASE
# 11th - 17th West Flow Rate @ 300 gpm (based on mine monitoring)
# No Flow from 7th North Sealed Area
# Total Diversion to Raw Water Pond Average 3,500 gpm

**Deer Creek Mine**
**Projected Raw Water Pond Blending Quality**
**11th - 17th West Total Iron @ 1.0 mg/L Start Value**

**Raw Water Pond Total Iron @ 0.2 mg/L** See Note 2
**Total Diversion to Raw Water Pond Average 3,500 gpm**

**Flow Reduction 50%**
**Total Iron Reduction:**
**11th - 17th West 20%**

**Date:** 4/1/2019 **Number of days** 730

**Flow Reduction 50%**
**Total Iron Reduction:**
**11th - 17th West 20%**

**Date:** 4/1/2021 **Number of days** 1461

### 11th - 17th West Sealed Area

| | Flow GPM | Total Iron mg/L | Weighted Average Total Iron mg/L |
|---|---|---|---|
| Rilda Canyon Mine Discharge | 300 | 1.00 | 0.28 |
| Huntington River See Note 2 | 2900 | 0.2 | |
| Total | 3200 | | |

| | Flow GPM | Total Iron mg/L | Weighted Average Total Iron mg/L |
|---|---|---|---|
| Rilda Canyon Mine Discharge | 250 | 1.00 | 0.26 |
| Huntington River See Note 2 | 3000 | 0.2 | |
| Total | 3250 | | |

| | Flow GPM | Total Iron mg/L | Weighted Average Total Iron mg/L |
|---|---|---|---|
| Rilda Canyon Mine Discharge | 200 | 1.00 | 0.25 |
| Huntington River See Note 2 | 3100 | 0.2 | |
| Total | 3300 | | |

Assumptions

•Rilda Canyon Mine Discharge varies from 300 to 200 gpm
•Huntington River Diversion varies from 2900 gpm to 3100 gpm
•Rilda Canyon Mine Discharge total iron dissipates slowly from 2.5 mg/L
•Flow decreases approximately 50% after two years, then decreases 5%/year
Note[2] Raw Water Pond plant intake sampling average total iron 0.2 mg/L

### Two Years after Discharging from Sealed Areas

| | Flow GPM | Total Iron mg/L | Weighted Average Total Iron mg/L |
|---|---|---|---|
| Rilda Canyon Mine Discharge | 300 | 0.5 | 0.23 |
| Huntington River See Note 2 | 3200 | 0.2 | |
| Total | 3500 | | |

| | Flow GPM | Total Iron mg/L | Weighted Average Total Iron mg/L |
|---|---|---|---|
| Rilda Canyon Mine Discharge | 250 | 0.5 | 0.22 |
| Huntington River See Note 2 | 3250 | 0.2 | |
| Total | 3500 | | |

| | Flow GPM | Total Iron mg/L | Weighted Average Total Iron mg/L |
|---|---|---|---|
| Rilda Canyon Mine Discharge | 200 | 0.50 | 0.22 |
| Huntington River See Note 2 | 3300 | 0.2 | |
| Total | 3500 | | |

Assumptions

•Rilda Canyon Mine Discharge varies from 300 to 200 gpm
•Huntington River Diversion varies from 3200 gpm to 3300 gpm
•Rilda Canyon Mine Discharge total iron dissipates slowly from 2.5 mg/L
•Flow decreases approximately 50% after two years, then decreases 5%/year
Note[2] Raw Water Pond plant intake sampling average total iron 0.2 mg/L

### Four Years after Discharging from Sealed Areas

| | Flow GPM | Total Iron mg/L | Weighted Average Total Iron mg/L |
|---|---|---|---|
| Rilda Canyon Mine Discharge | 270 | 0.40 | 0.22 |
| Huntington River See Note 2 | 3230 | 0.2 | |
| Total | 3500 | | |

| | Flow GPM | Total Iron mg/L | Weighted Average Total Iron mg/L |
|---|---|---|---|
| Rilda Canyon Mine Discharge | 225 | 0.40 | 0.21 |
| Huntington River See Note 2 | 3275 | 0.2 | |
| Total | 3500 | | |

| | Flow GPM | Total Iron mg/L | Weighted Average Total Iron mg/L |
|---|---|---|---|
| Rilda Canyon Mine Discharge | 180 | 0.40 | 0.21 |
| Huntington River See Note 2 | 3320 | 0.2 | |
| Total | 3500 | | |

Assumptions

•Rilda Canyon Mine Discharge varies from 270 to 180 gpm
•Huntington River Diversion varies from 3230 gpm to 3320 gpm
•Rilda Canyon Mine Discharge total iron dissipates slowly from 2.5 mg/L
•Flow decreases approximately 50% after two years, then decreases 5%/year
Note[2] Raw Water Pond plant intake sampling average total iron 0.2 mg/L

# TOTAL IRON BLENDING ANALYSIS FROM SEALED AREAS
## 11th - 17th West Flow Rate @ 300 gpm (based on mine monitoring)
## 7th North Sealed Area Flow Varies from 300 to 100 gpm

**Deer Creek Mine**

**Projected Mine Water Discharge Quality**

**11th - 17th West Total Iron @ 1.0 mg/L Start Value**
**Plus 7th N. XC-39 Total Iron @ 3.23 mg/L Start Value**
**Start Date: 4/1/2017**
**Total Iron Regression formula: Y = - 0.0014X + 60.628** See note #3
**Iron Regression start 4/1/2012 (3.23 = 41000*0.0014 + 60.628)**

**Flow Reduction 50%**
**Total Iron Reduction:**
**11th - 17th West 20%**
**7th North XC-39 Regression Formula**
**Date: 4/1/2019 Number of days 730**
**Iron Regression start 4/1/2014 (2.20 = 41730*0.0014 + 60.628)**

**Flow Reduction 10%**
**Total Iron Reduction:**
**11th - 17th West 20%**
**7th North XC-39 Regression Formula**
**Date: 4/1/2021 Number of days 1461**
**Iron Regression start 4/1/2016 (1.18 = 42461*0.0014 + 60.628)**

### Blended 11th - 17th West and 7th North XC-39 Sealed Areas

| Flow Rate #1 | Flow GPM | Total Iron mg/L | Weighted Average Total Iron mg/L |
|---|---|---|---|
| 11th - 17th West See Note #1 | 300 | 1.0 | 2.12 |
| 7th North XC-39 See Note #2 | 300 | 3.23 | |
| Total | 600 | | |

| Flow Rate #2 | Flow GPM | Total Iron mg/L | Weighted Average Total Iron mg/L |
|---|---|---|---|
| 11th - 17th West | 300 | 1.0 | 1.89 |
| 7th North XC-39 | 200 | 3.23 | |
| Total | 500 | | |

| Flow Rate #3 | Flow GPM | Total Iron mg/L | Weighted Average Total Iron mg/L |
|---|---|---|---|
| 11th - 17th West | 300 | 1.0 | 1.56 |
| 7th North XC-39 | 100 | 3.23 | |
| Total | 400 | | |

### Two Years after Discharging from Sealed Areas

| | Flow GPM | Total Iron mg/L | Weighted Average Total Iron mg/L |
|---|---|---|---|
| 11th - 17th West | 150 | 0.8 | 1.50 |
| 7th North XC-39 | 150 | 2.2 | |
| Total | 300 | | |

| | Flow GPM | Total Iron mg/L | Weighted Average Total Iron mg/L |
|---|---|---|---|
| 11th - 17th West | 150 | 0.8 | 1.36 |
| 7th North XC-39 | 100 | 2.2 | |
| Total | 250 | | |

| | Flow GPM | Total Iron mg/L | Weighted Average Total Iron mg/L |
|---|---|---|---|
| 11th - 17th West | 150 | 0.8 | 1.15 |
| 7th North XC-39 | 50 | 2.2 | |
| Total | 200 | | |

### Four Years after Discharging from Sealed Areas

| | Flow GPM | Total Iron mg/L | Weighted Average Total Iron mg/L |
|---|---|---|---|
| 11th - 17th West | 135 | 0.64 | 0.91 |
| 7th North XC-39 | 135 | 1.18 | |
| Total | 270 | | |

| | Flow GPM | Total Iron mg/L | Weighted Average Total Iron mg/L |
|---|---|---|---|
| 11th - 17th West | 135 | 0.64 | 0.86 |
| 7th North XC-39 | 90 | 1.18 | |
| Total | 225 | | |

| | Flow GPM | Total Iron mg/L | Weighted Average Total Iron mg/L |
|---|---|---|---|
| 11th - 17th West | 135 | 0.64 | 0.78 |
| 7th North XC-39 | 45 | 1.18 | |
| Total | 180 | | |

Assumptions

- 11th West - 17th West flow rate 300 gpm
- Flow rate from 7th North seals varies from 300 gpm to 100 gpm
- 11th West - 17th West seals total iron dissipates slowly from 1.0 mg/L 20% reduction/2 years
- 7th North XC-39 seals total iron content trends as 11th W - 17th W
- Flow decreases approximately 50% after two years, then decreases 5%/year

Note #1 11th - 17th West reduces 20%/2 years

Note #2 7th North XC-39 reduction based on regression formula starting at 3.23 mg/L

Note #3 Regression formula based on sampling results from 11th - 17th West

# TOTAL IRON BLENDING ANALYSIS FROM SEALED AREAS
## 11th - 17th West Flow Rate @ 300 gpm (based on mine monitoring)
## 7th North Sealed Area Flow Varies from 300 to 100 gpm

**Deer Creek Mine**
**Projected Mine Water Discharge Quality**

**11th - 17th West Total Iron @ 0.8 mg/L Start Value**
**Plus 7th N. XC-39 Total Iron @ 3.23 mg/L Start Value**
**Start Date 4/1/2017**
**Total Iron Regression formula:** Y = - 0.0014X + 60.628 See note #3
**Iron Regression start 4/1/2012 (3.23 = 41000*0.0014 + 60.628)**

**Flow Reduction 50%**
**Total Iron Reduction:**
**11th - 17th West 20%**
**7th North XC-39 Regression Formula**
**Date: 4/1/2019 Number of days 730**
**Iron Regression start 4/1/2014 (2.20 = 41730*0.0014 + 60.628)**

**Flow Reduction 10%**
**Total Iron Reduction:**
**11th - 17th West 20%**
**7th North XC-39 Regression Formula**
**Date: 4/1/2021 Number of days 1461**
**Iron Regression start 4/1/2016 (1.18 = 42461*0.0014 + 60.628)**

### Blended 11th - 17th West and 7th North XC-39 Sealed Areas

| Flow Rate #1 | Flow GPM | Total Iron mg/L | Weighted Average Total Iron mg/L |
|---|---|---|---|
| 11th - 17th West | 300 | 0.8 | 2.02 |
| 7th North XC-39 | 300 | 3.23 | |
| Total | 600 | | |

| Flow Rate #2 | Flow GPM | Total Iron mg/L | Weighted Average Total Iron mg/L |
|---|---|---|---|
| 11th - 17th West | 300 | 0.8 | 1.77 |
| 7th North XC-39 | 200 | 3.23 | |
| Total | 500 | | |

| Flow Rate #3 | Flow GPM | Total Iron mg/L | Weighted Average Total Iron mg/L |
|---|---|---|---|
| 11th - 17th West | 300 | 0.8 | 1.41 |
| 7th North XC-39 | 100 | 3.23 | |
| Total | 400 | | |

### Two Years after Discharging from Sealed Areas

| | Flow GPM | Total Iron mg/L | Weighted Average Total Iron mg/L |
|---|---|---|---|
| 11th - 17th West | 150 | 0.6 | 1.42 |
| 7th North XC-39 | 150 | 2.2 | |
| Total | 300 | | |

| | Flow GPM | Total Iron mg/L | Weighted Average Total Iron mg/L |
|---|---|---|---|
| 11th - 17th West | 150 | 0.6 | 1.26 |
| 7th North XC-39 | 100 | 2.2 | |
| Total | 250 | | |

| | Flow GPM | Total Iron mg/L | Weighted Average Total Iron mg/L |
|---|---|---|---|
| 11th - 17th West | 150 | 0.6 | 1.03 |
| 7th North XC-39 | 50 | 2.2 | |
| Total | 200 | | |

### Four Years after Discharging from Sealed Areas

| | Flow GPM | Total Iron mg/L | Weighted Average Total Iron mg/L |
|---|---|---|---|
| 11th - 17th West | 135 | 0.51 | 0.85 |
| 7th North XC-39 | 135 | 1.18 | |
| Total | 270 | | |

| | Flow GPM | Total Iron mg/L | Weighted Average Total Iron mg/L |
|---|---|---|---|
| 11th - 17th West | 135 | 0.51 | 0.78 |
| 7th North XC-39 | 90 | 1.18 | |
| Total | 225 | | |

| | Flow GPM | Total Iron mg/L | Weighted Average Total Iron mg/L |
|---|---|---|---|
| 11th - 17th West | 135 | 0.51 | 0.68 |
| 7th North XC-39 | 45 | 1.18 | |
| Total | 180 | | |

Assumptions

•11th West - 17th West flow rate 300 gpm
•Flow rate from 7th North seals varies from 300 gpm to 100 gpm
•11th West - 17th West seals total iron dissipates slowly from 1.0 mg/L 20% reduction/2 years
•7th North XC-39 seals total iron content trends as 11th W - 17th W
•Flow decreases approximately 50% after two years, then decreases 5%/year

Note #1 11th - 17th West reduces 20%/2 years
7th North XC-39 reduction based on regression formula
Note #2 starting at 3.23 mg/L

Note #3 Regression formula based on sampling results from 11th - 17th West

# TOTAL IRON BLENDING ANALYSIS FROM SEALED AREAS
## 11th - 17th West Flow Rate @ 300 gpm (based on mine monitoring)
## 7th North Sealed Area Flow Varies from 300 to 100 gpm

**Deer Creek Mine**
**Projected Mine Water Discharge Quality**

**11th - 17th West Total Iron @ 0.6 mg/L Start Value**
**Plus 7th N. XC-39 Total Iron @ 3.23 mg/L Start Value**
**Start Date 4/1/2017**
**Total Iron Regression formula:** Y = - 0.0014X + 60.628 See note #3
**Iron Regression start 4/1/2012 (3.23 = 41000*0.0014 + 60.628)**

**Flow Reduction 50%**
**Total Iron Reduction:**
**11th - 17th West 20%**
**7th North XC-39 Regression Formula**
**Date: 4/1/2019 Number of days 730**
**Iron Regression start 4/1/2014 (2.20 = 41730*0.0014 + 60.628)**

**Flow Reduction 10%**
**Total Iron Reduction:**
**11th - 17th West 20%**
**7th North XC-39 Regression Formula**
**Date: 4/1/2021 Number of days 1461**
**Iron Regression start 4/1/2016 (1.18 = 42461*0.0014 + 60.628)**

### Blended 11th - 17th West and 7th North XC-39 Sealed Areas

| Flow Rate #1 | Flow GPM | Total Iron mg/L | Weighted Average Total Iron mg/L |
|---|---|---|---|
| 11th - 17th West | 300 | 0.6 | 1.92 |
| 7th North XC-39 | 300 | 3.23 | |
| Total | 600 | | |

| Flow Rate #2 | Flow GPM | Total Iron mg/L | Weighted Average Total Iron mg/L |
|---|---|---|---|
| 11th - 17th West | 300 | 0.6 | 1.65 |
| 7th North XC-39 | 200 | 3.23 | |
| Total | 500 | | |

| Flow Rate #3 | Flow GPM | Total Iron mg/L | Weighted Average Total Iron mg/L |
|---|---|---|---|
| 11th - 17th West | 300 | 0.6 | 1.26 |
| 7th North XC-39 | 100 | 3.23 | |
| Total | 400 | | |

### Two Years after Discharging from Sealed Areas

| | Flow GPM | Total Iron mg/L | Weighted Average Total Iron mg/L |
|---|---|---|---|
| 11th - 17th West | 150 | 0.5 | 1.34 |
| 7th North XC-39 | 150 | 2.2 | |
| Total | 300 | | |

| | Flow GPM | Total Iron mg/L | Weighted Average Total Iron mg/L |
|---|---|---|---|
| 11th - 17th West | 150 | 0.5 | 1.17 |
| 7th North XC-39 | 100 | 2.2 | |
| Total | 250 | | |

| | Flow GPM | Total Iron mg/L | Weighted Average Total Iron mg/L |
|---|---|---|---|
| 11th - 17th West | 150 | 0.5 | 0.91 |
| 7th North XC-39 | 50 | 2.2 | |
| Total | 200 | | |

### Four Years after Discharging from Sealed Areas

| | Flow GPM | Total Iron mg/L | Weighted Average Total Iron mg/L |
|---|---|---|---|
| 11th - 17th West | 135 | 0.38 | 0.78 |
| 7th North XC-39 | 135 | 1.18 | |
| Total | 270 | | |

| | Flow GPM | Total Iron mg/L | Weighted Average Total Iron mg/L |
|---|---|---|---|
| 11th - 17th West | 135 | 0.38 | 0.70 |
| 7th North XC-39 | 90 | 1.18 | |
| Total | 225 | | |

| | Flow GPM | Total Iron mg/L | Weighted Average Total Iron mg/L |
|---|---|---|---|
| 11th - 17th West | 135 | 0.38 | 0.58 |
| 7th North XC-39 | 45 | 1.18 | |
| Total | 180 | | |

Assumptions

- 11th West - 17th West flow rate 300 gpm
- Flow rate from 7th North seals varies from 300 gpm to 100 gpm
- 11th West - 17th West seals total iron dissipates slowly from 0.6 mg/L
- 7th North XC-39 seals total iron content trends as 11th W - 17th W
- Flow decreases approximately 50% after two years, then decreases 5%/year

Note #1 11th - 17th West reduces 20%/2 years

Note #2 7th North XC-39 reduction based on regression formula starting at 3.23 mg/L

Note #3 Regression formula based on sampling results from 11th - 17th West

# BLENDED CASE
## 11th - 17th West Flow Rate @ 300 gpm (based on mine monitoring)
## 7th North Sealed Area Flow Varies from 300 to 100 gpm
## Total Diversion to Raw Water Pond Average 7,000 gpm

**Deer Creek Mine**
**Projected Raw Water Pond Blending Quality**
**Mine Discharge Total Iron @ 2.12 mg/L**

**Raw Water Pond Total Iron @ 0.48 mg/L** See Note 1
**Total Diversion to Raw Water Pond Average 7,000 gpm**
**Total Iron Regression formula:** Y = - 0.0014X + 60.628 See note #3

**Flow Reduction 50%**
**Total Iron Reduction:**
**11th - 17th West 20%**
**7th North XC-39 Regression Formula**
**Date:** 4/1/2019 **Number of days** 730

**Flow Reduction 50%**
**Total Iron Reduction:**
**11th - 17th West 20%**
**7th North XC-39 Regression Formula**
**Date:** 4/1/2021 **Number of days** 1461

### Blended 11th - 17th West and 7th North XC-39 Sealed Areas

| Flow Rate #1 | Flow GPM | Total Iron mg/L | Weighted Average Total Iron mg/L |
|---|---|---|---|
| Rilda Canyon Mine Discharge | 600 | 2.12 | 0.62 |
| Huntington River See Note 1 | 6400 | 0.48 | |
| Total | 7000 | | |

| Flow Rate #2 | Flow GPM | Total Iron mg/L | Weighted Average Total Iron mg/L |
|---|---|---|---|
| Rilda Canyon Mine Discharge | 500 | 1.89 | 0.58 |
| Huntington River See Note 1 | 6500 | 0.48 | |
| Total | 7000 | | |

| Flow Rate #3 | Flow GPM | Total Iron mg/L | Weighted Average Total Iron mg/L |
|---|---|---|---|
| Rilda Canyon Mine Discharge | 400 | 1.56 | 0.54 |
| Huntington River See Note 1 | 6600 | 0.48 | |
| Total | 7000 | | |

Assumptions

•Rilda Canyon Mine Discharge varies from 600 to 400 gpm
•Huntington River Diversion varies from 6400 gpm to 6600 gpm
•Rilda Canyon Mine Discharge total iron dissipates slowly from 2.12 mg/L
•Flow decreases approximately 50% after two years, then decreases 5%/year
Note[1] Huntington River HCC01 average total iron 0.48 mg/L (1990 - 2016)

### Two Years after Discharging from Sealed Areas

| | Flow GPM | Total Iron mg/L | Weighted Average Total Iron mg/L |
|---|---|---|---|
| Rilda Canyon Mine Discharge | 300 | 1.50 | 0.52 |
| Huntington River See Note 1 | 6700 | 0.48 | |
| Total | 7000 | | |

| | Flow GPM | Total Iron mg/L | Weighted Average Total Iron mg/L |
|---|---|---|---|
| Rilda Canyon Mine Discharge | 250 | 1.36 | 0.51 |
| Huntington River See Note 1 | 6750 | 0.48 | |
| Total | 7000 | | |

| | Flow GPM | Total Iron mg/L | Weighted Average Total Iron mg/L |
|---|---|---|---|
| Rilda Canyon Mine Discharge | 200 | 1.15 | 0.50 |
| Huntington River See Note 1 | 6800 | 0.48 | |
| Total | 7000 | | |

Assumptions

•Rilda Canyon Mine Discharge varies from 600 to 400 gpm
•Huntington River Diversion varies from 6400 gpm to 6600 gpm
•Rilda Canyon Mine Discharge total iron dissipates slowly from 2.12 mg/L
•Flow decreases approximately 50% after two years, then decreases 5%/year
Note[1] Huntington River HCC01 average total iron 0.48 mg/L (1990 - 2016)

### Four Years after Discharging from Sealed Areas

| | Flow GPM | Total Iron mg/L | Weighted Average Total Iron mg/L |
|---|---|---|---|
| Rilda Canyon Mine Discharge | 270 | 0.91 | 0.50 |
| Huntington River See Note 1 | 6730 | 0.48 | |
| Total | 7000 | | |

| | Flow GPM | Total Iron mg/L | Weighted Average Total Iron mg/L |
|---|---|---|---|
| Rilda Canyon Mine Discharge | 225 | 0.86 | 0.49 |
| Huntington River See Note 1 | 6775 | 0.48 | |
| Total | 7000 | | |

| | Flow GPM | Total Iron mg/L | Weighted Average Total Iron mg/L |
|---|---|---|---|
| Rilda Canyon Mine Discharge | 180 | 0.78 | 0.49 |
| Huntington River See Note 1 | 6820 | 0.48 | |
| Total | 7000 | | |

Assumptions

•Rilda Canyon Mine Discharge varies from 600 to 400 gpm
•Huntington River Diversion varies from 6400 gpm to 6600 gpm
•Rilda Canyon Mine Discharge total iron dissipates slowly from 2.12 mg/L
•Flow decreases approximately 50% after two years, then decreases 5%/year
Note[1] Huntington River HCC01 average total iron 0.48 mg/L (1990 - 2016)

# BLENDED CASE
# 11th - 17th West Flow Rate @ 300 gpm (based on mine monitoring)
# 7th North Sealed Area Flow Varies from 300 to 100 gpm
# Total Diversion to Raw Water Pond Average 7,000 gpm

**Deer Creek Mine**
**Projected Raw Water Pond Blending Quality**

**Mine Discharge Total Iron @ 2.12 mg/L**
**Raw Water Pond Total Iron @ 0.2 mg/L** See Note 2
**Total Diversion to Raw Water Pond Average 7,000 gpm**

**Flow Reduction 50%**
**Total Iron Reduction:**
**11th - 17th West 20%**
**7th North XC-39 Regression Formula**
**Date:** 4/1/2019 **Number of days** 730

**Flow Reduction 50%**
**Total Iron Reduction:**
**11th - 17th West 20%**
**7th North XC-39 Regression Formula**
**Date:** 4/1/2021 **Number of days** 1461

## Blended 11th - 17th West and 7th North XC-39 Sealed Areas

| | Flow GPM | Total Iron mg/L | Weighted Average Total Iron mg/L |
|---|---|---|---|
| Rilda Canyon Mine Discharge | 600 | 2.12 | 0.36 |
| Huntington River See Note 2 | 6400 | 0.2 | |
| Total | 7000 | | |

| | Flow GPM | Total Iron mg/L | Weighted Average Total Iron mg/L |
|---|---|---|---|
| Rilda Canyon Mine Discharge | 500 | 1.89 | 0.32 |
| Huntington River See Note 2 | 6500 | 0.2 | |
| Total | 7000 | | |

| | Flow GPM | Total Iron mg/L | Weighted Average Total Iron mg/L |
|---|---|---|---|
| Rilda Canyon Mine Discharge | 400 | 1.56 | 0.28 |
| Huntington River See Note 2 | 6600 | 0.2 | |
| Total | 7000 | | |

Assumptions

•Rilda Canyon Mine Discharge varies from 600 to 400 gpm
•Huntington River Diversion varies from 6400 gpm to 6600 gpm
•Rilda Canyon Mine Discharge total iron dissipates slowly from 2.12 mg/L
•Flow decreases approximately 50% after two years, then decreases 5%/year
Note[2] Raw Water Pond plant intake sampling average total iron 0.2 mg/L (2016)

## Two Years after Discharging from Sealed Areas

| | Flow GPM | Total Iron mg/L | Weighted Average Total Iron mg/L |
|---|---|---|---|
| Rilda Canyon Mine Discharge | 300 | 1.50 | 0.26 |
| Huntington River See Note 2 | 6700 | 0.2 | |
| Total | 7000 | | |

| | Flow GPM | Total Iron mg/L | Weighted Average Total Iron mg/L |
|---|---|---|---|
| Rilda Canyon Mine Discharge | 250 | 1.36 | 0.24 |
| Huntington River See Note 2 | 6750 | 0.2 | |
| Total | 7000 | | |

| | Flow GPM | Total Iron mg/L | Weighted Average Total Iron mg/L |
|---|---|---|---|
| Rilda Canyon Mine Discharge | 200 | 1.15 | 0.23 |
| Huntington River See Note 2 | 6800 | 0.2 | |
| Total | 7000 | | |

Assumptions

•Rilda Canyon Mine Discharge varies from 600 to 400 gpm
•Huntington River Diversion varies from 6700 gpm to 6800 gpm
•Rilda Canyon Mine Discharge total iron dissipates slowly from 2.12 mg/L
•Flow decreases approximately 50% after two years, then decreases 5%/year
Note[2] Raw Water Pond plant intake sampling average total iron 0.2 mg/L (2016)

## Four Years after Discharging from Sealed Areas

| | Flow GPM | Total Iron mg/L | Weighted Average Total Iron mg/L |
|---|---|---|---|
| Rilda Canyon Mine Discharge | 270 | 0.91 | 0.23 |
| Huntington River See Note 2 | 6730 | 0.2 | |
| Total | 7000 | | |

| | Flow GPM | Total Iron mg/L | Weighted Average Total Iron mg/L |
|---|---|---|---|
| Rilda Canyon Mine Discharge | 225 | 0.86 | 0.22 |
| Huntington River See Note 2 | 6775 | 0.2 | |
| Total | 7000 | | |

| | Flow GPM | Total Iron mg/L | Weighted Average Total Iron mg/L |
|---|---|---|---|
| Rilda Canyon Mine Discharge | 180 | 0.78 | 0.21 |
| Huntington River See Note 2 | 6820 | 0.2 | |
| Total | 7000 | | |

Assumptions

•Rilda Canyon Mine Discharge varies from 600 to 400 gpm
•Huntington River Diversion varies from 6730 gpm to 6820 gpm
•Rilda Canyon Mine Discharge total iron dissipates slowly from 2.12 mg/L
•Flow decreases approximately 50% after two years, then decreases 5%/year
Note[2] Raw Water Pond plant intake sampling average total iron 0.2 mg/L (2016)

# BLENDED CASE
# 11th - 17th West Flow Rate @ 300 gpm (based on mine monitoring)
# 7th North Sealed Area Flow Varies from 300 to 100 gpm
# Total Diversion to Raw Water Pond Average 3,500 gpm

**Deer Creek Mine**
**Projected Raw Water Pond Blending Quality**
**Mine Discharge Total Iron @ 2.12 mg/L**

**Raw Water Pond Total Iron @ 0.48 mg/L** See Note 1
**Total Diversion to Raw Water Pond Average 3,500 gpm**
**Total Iron Regression formula:** Y = - 0.0014X + 60.628 See note #3

**Flow Reduction 50%**
**Total Iron Reduction:**
**11th - 17th West 20%**
**7th North XC-39 Regression Formula**
**Date:** 4/1/2019 **Number of days** 730

**Flow Reduction 50%**
**Total Iron Reduction:**
**11th - 17th West 20%**
**7th North XC-39 Regression Formula**
**Date:** 4/1/2021 **Number of days** 1461

## Blended 11th - 17th West and 7th North XC-39 Sealed Areas

| Flow Rate #1 | Flow GPM | Total Iron mg/L | Weighted Average Total Iron mg/L |
|---|---|---|---|
| Rilda Canyon Mine Discharge | 600 | 2.12 | 0.76 |
| Huntington River See Note 1 | 2900 | 0.48 | |
| Total | 3500 | | |

| Flow Rate #2 | Flow GPM | Total Iron mg/L | Weighted Average Total Iron mg/L |
|---|---|---|---|
| Rilda Canyon Mine Discharge | 500 | 1.89 | 0.68 |
| Huntington River See Note 1 | 3000 | 0.48 | |
| Total | 3500 | | |

| Flow Rate #3 | Flow GPM | Total Iron mg/L | Weighted Average Total Iron mg/L |
|---|---|---|---|
| Rilda Canyon Mine Discharge | 400 | 1.56 | 0.60 |
| Huntington River See Note 1 | 3100 | 0.48 | |
| Total | 3500 | | |

Assumptions

- Rilda Canyon Mine Discharge varies from 600 to 400 gpm
- 11th W - 17th W flow @ 300 gpm vary 7th N XC-39 from 300 gpm to 100 gpm
- Huntington River Diversion varies from 2900 gpm to 3100 gpm
- Rilda Canyon Mine Discharge total iron dissipates slowly from 2.5 mg/L
- Flow decreases approximately 50% after two years, then decreases 5%/year

Note[1] Huntington River HCC01 average total iron 0.48 mg/L

## Two Years after Discharging from Sealed Areas

| | Flow GPM | Total Iron mg/L | Weighted Average Total Iron mg/L |
|---|---|---|---|
| Rilda Canyon Mine Discharge | 300 | 1.50 | 0.57 |
| Huntington River See Note 1 | 3200 | 0.48 | |
| Total | 3500 | | |

| | Flow GPM | Total Iron mg/L | Weighted Average Total Iron mg/L |
|---|---|---|---|
| Rilda Canyon Mine Discharge | 250 | 1.36 | 0.54 |
| Huntington River See Note 1 | 3250 | 0.48 | |
| Total | 3500 | | |

| | Flow GPM | Total Iron mg/L | Weighted Average Total Iron mg/L |
|---|---|---|---|
| Rilda Canyon Mine Discharge | 200 | 1.15 | 0.52 |
| Huntington River See Note 1 | 3300 | 0.48 | |
| Total | 3500 | | |

Assumptions

- Rilda Canyon Mine Discharge varies from 300 to 200 gpm
- Huntington River Diversion varies from 6400 gpm to 6600 gpm
- Rilda Canyon Mine Discharge total iron dissipates slowly from 2.5 mg/L
- Flow decreases approximately 50% after two years, then decreases 5%/year

Note[1] Huntington River HCC01 average total iron 0.48 mg/L

## Four Years after Discharging from Sealed Areas

| | Flow GPM | Total Iron mg/L | Weighted Average Total Iron mg/L |
|---|---|---|---|
| Rilda Canyon Mine Discharge | 270 | 0.91 | 0.51 |
| Huntington River See Note 1 | 3230 | 0.48 | |
| Total | 3500 | | |

| | Flow GPM | Total Iron mg/L | Weighted Average Total Iron mg/L |
|---|---|---|---|
| Rilda Canyon Mine Discharge | 225 | 0.86 | 0.50 |
| Huntington River See Note 1 | 3275 | 0.48 | |
| Total | 3500 | | |

| | Flow GPM | Total Iron mg/L | Weighted Average Total Iron mg/L |
|---|---|---|---|
| Rilda Canyon Mine Discharge | 180 | 0.64 | 0.49 |
| Huntington River See Note 1 | 3320 | 0.48 | |
| Total | 3500 | | |

Assumptions

- Rilda Canyon Mine Discharge varies from 270 to 180 gpm
- Huntington River Diversion varies from 6400 gpm to 6600 gpm
- Rilda Canyon Mine Discharge total iron dissipates slowly from 2.5 mg/L
- Flow decreases approximately 50% after two years, then decreases 5%/year

Note[1] Huntington River HCC01 average total iron 0.48 mg/L

# BLENDED CASE
## 11th - 17th West Flow Rate @ 300 gpm (based on mine monitoring)
## 7th North Sealed Area Flow Varies from 300 to 100 gpm
## Total Diversion to Raw Water Pond Average 3,500 gpm

**Deer Creek Mine**
**Projected Raw Water Pond Blending Quality**
**Mine Discharge Total Iron @ 2.12 mg/L**

**Raw Water Pond Total Iron @ 0.2 mg/L** See Note 2
**Huntington River Diversion Average 3,500 gpm**
**Total Iron Regression formula:** Y = - 0.0014X + 60.628 See note #3

**Flow Reduction 50%**
**Total Iron Reduction:**
**11th - 17th West 20%**
**7th North XC-39 Regression Formula**
**Date:** 4/1/2019 **Number of days** 730

**Flow Reduction 50%**
**Total Iron Reduction:**
**11th - 17th West 20%**
**7th North XC-39 Regression Formula**
**Date:** 4/1/2021 **Number of days** 1461

### Blended 11th - 17th West and 7th North XC-39 Sealed Areas

| | Flow GPM | Total Iron mg/L | Weighted Average Total Iron mg/L |
|---|---|---|---|
| Rilda Canyon Mine Discharge | 600 | 2.12 | 0.53 |
| Huntington River See Note 2 | 2900 | 0.2 | |
| Total | 3500 | | |

| | Flow GPM | Total Iron mg/L | Weighted Average Total Iron mg/L |
|---|---|---|---|
| Rilda Canyon Mine Discharge | 500 | 1.89 | 0.44 |
| Huntington River See Note 2 | 3000 | 0.2 | |
| Total | 3500 | | |

| | Flow GPM | Total Iron mg/L | Weighted Average Total Iron mg/L |
|---|---|---|---|
| Rilda Canyon Mine Discharge | 400 | 1.56 | 0.36 |
| Huntington River See Note 2 | 3100 | 0.2 | |
| Total | 3500 | | |

Assumptions

•Rilda Canyon Mine Discharge varies from 600 to 400 gpm
•Huntington River Diversion varies from 2900 gpm to 3100 gpm
•Rilda Canyon Mine Discharge total iron dissipates slowly from 2.5 mg/L
•Flow decreases approximately 50% after two years, then decreases 5%/year
Note[2] Raw Water Pond plant intake sampling average total iron 0.2 mg/L

### Two Years after Discharging from Sealed Areas

| | Flow GPM | Total Iron mg/L | Weighted Average Total Iron mg/L |
|---|---|---|---|
| Rilda Canyon Mine Discharge | 300 | 1.1 | 0.27 |
| Huntington River See Note 2 | 3200 | 0.2 | |
| Total | 3500 | | |

| | Flow GPM | Total Iron mg/L | Weighted Average Total Iron mg/L |
|---|---|---|---|
| Rilda Canyon Mine Discharge | 250 | 0.9 | 0.25 |
| Huntington River See Note 2 | 3250 | 0.2 | |
| Total | 3500 | | |

| | Flow GPM | Total Iron mg/L | Weighted Average Total Iron mg/L |
|---|---|---|---|
| Rilda Canyon Mine Discharge | 200 | 0.78 | 0.23 |
| Huntington River See Note 2 | 3300 | 0.2 | |
| Total | 3500 | | |

Assumptions

•Rilda Canyon Mine Discharge varies from 300 to 200 gpm
•Huntington River Diversion varies from 3200 gpm to 3300 gpm
•Rilda Canyon Mine Discharge total iron dissipates slowly from 2.5 mg/L
•Flow decreases approximately 50% after two years, then decreases 5%/year
Note[2] Raw Water Pond plant intake sampling average total iron 0.2 mg/L

### Four Years after Discharging from Sealed Areas

| | Flow GPM | Total Iron mg/L | Weighted Average Total Iron mg/L |
|---|---|---|---|
| Rilda Canyon Mine Discharge | 270 | 0.85 | 0.25 |
| Huntington River See Note 2 | 3230 | 0.2 | |
| Total | 3500 | | |

| | Flow GPM | Total Iron mg/L | Weighted Average Total Iron mg/L |
|---|---|---|---|
| Rilda Canyon Mine Discharge | 225 | 0.76 | 0.24 |
| Huntington River See Note 2 | 3275 | 0.2 | |
| Total | 3500 | | |

| | Flow GPM | Total Iron mg/L | Weighted Average Total Iron mg/L |
|---|---|---|---|
| Rilda Canyon Mine Discharge | 180 | 0.62 | 0.22 |
| Huntington River See Note 2 | 3320 | 0.2 | |
| Total | 3500 | | |

Assumptions

•Rilda Canyon Mine Discharge varies from 270 to 180 gpm
•Huntington River Diversion varies from 3230 gpm to 3320 gpm
•Rilda Canyon Mine Discharge total iron dissipates slowly from 2.5 mg/L
•Flow decreases approximately 50% after two years, then decreases 5%/year
Note[2] Raw Water Pond plant intake sampling average total iron 0.2 mg/L

# DEER CREEK MINE

# VOLUME 12

# MILL FORK LEASE

**R645-301-700**

**HYDROLOGY**

# APPENDIX D

**POST MINE CLOSURE HYDROLOGIC ANALYSIS**

- **Sediment/Goethite Production Huntington Plant Raw Water Pond**
  - **Sediment Load**
  - **Goethite Load from Mine**
  - **Sediment Load versus Goethite Production**

## Huntington River Diversion to Raw Water Pond
## Sediment Production

| INPUTS | | | | | | |
|---|---|---|---|---|---|---|
| **Water Lbs./gallon** | 8.34 | Lbs/gal | | | | |
| **Total Suspended Solids** | | | | | | |
| HCC01 1990 - 2016 | | | | | | |
| Average | 35 | mg/L | | | | |
| Maximum | 969 | mg/L | | | | |
| Minimum | 1 | mg/L | | | | |
| **Huntington River Diversion** | | | | | | |
| Diversion Rates | | | | | | |
| Average, gpm | 7,000 | gpm | 10.1 | MGD | | |
| Maximum, gpm | 10,000 | gpm | 14.4 | MGD | | |
| **Deer Creek Mine** | | | | | | |
| Projected Rilda Canyon | | | | | | |
| Discahrge Rate | 300 | gpm | | | | |
| **Density of sediment** | | | | | | |
| Sediment load | 150 | Lbs/cf$^3$ | 4,050 | Lbs/yd$^3$ | 2.0 | tons/yd$^3$ |

| **Sediment Load to Raw Water Pond** See Note 1 | | | | | **Sediment Load HCC01** | | | **Sediment Production to Raw Water Pond** | | | |
|---|---|---|---|---|---|---|---|---|---|---|---|
| Diversion Rate @ Average 7,000/minute | | | | | mg/L | | | Load Lbs/day | Tons/day | Yard$^3$ /day | Yard$^3$ /year |
| | 9,648,000 | gal/day | 9.65 | MGD | 35 | mg/L | average | 2,816 | 1.4 | 0.70 | 254 |
| Huntington River | 6700 | gpm | | | 969 | mg/L | maximum | 77,970 | 39.0 | 19.25 | 7027 |
| Deer Creek Mine - Rilda | 300 | gpm | | | 1 | mg/l | minimum | 80 | 0.04 | 0.02 | 7 |
| Diversion Rate @ Average 10,000/minute | | | | | mg/L | | | Load Lbs/day | Tons/day | Yard$^3$ /day | Yard$^3$ /year |
| | 13,968,000 | gal/day | 13.97 | MGD | 35 | mg/L | average | 4,077 | 2.0 | 1.01 | 367 |
| Huntington River | 9700 | gpm | | | 969 | mg/L | maximum | 112,882 | 56.4 | 27.87 | 10,173 |
| Deer Creek Mine - Rilda | 300 | gpm | | | 1 | mg/L | maximum | 116 | 0.1 | 0.03 | 10 |

Note [1] Total sediment production to the Raw Water Pond is calculated based on the Huntington River diversion rate and total suspended solids data collected at HCC01
Discharge from Deer Creek Mine is discounted from the total volume diverted

# Deer Creek Mine
# Rilda Canyon Mine Discharge
# Production of Goethite (FeOOH)

**INPUTS**

| Atomic Weights | | |
|---|---|---|
| Iron | Fe | 55.85 |
| Oxygen | O | 16 |
| Hydrogen | H | 1 |
| Goethite (FeOOH) | Fe | 88.85 |

| | | |
|---|---|---|
| Weight % of Fe in Goethite | 63 | % |
| Weight % of O in Goethite | 36 | % |
| Weight % of H in Goethite | 1 | % |
| Density of Goethite | 265 | lbs/ $Ft^3$ |
| 1 ton of Goethite = | 0.28 | $yard^3$ |

**Base Case**

Inputs

| | | | |
|---|---|---|---|
| Mine Discharge Rate | 300 | gpm | *11th - 17th West Sealed Area |
| Total Iron | 1.3 | mg/L | |

**Mine Discharge @ 1.0 mg/L of Total Iron**

| | | | |
|---|---|---|---|
| Flow Rate | 300 | gpm | Input Values |
| Total Iron | 1.3 | mg/L | |
| 1 liter of water contains | 2.20 | Lbs. | 1.3 mg of Fe/liter |
| 1 gallon of water contains | 8.36 | Lbs. | 4.93 mg of Fe/gal |

**Mine Discharge Rate Disharge Rate**

Discharge of 300 gallons per minute (432,000 GPD) at 3.79 milligrams per gallon,

| | | |
|---|---|---|
| Discharge rate | 432,000 | gallons |
| Milligrams of Fe/gallon | 4.93 | mg/g |

Fe and $Fe^2O^3$ Calcualtions

| | |
|---|---|
| 2,129,546 | mg of Fe/day |
| 2,129.55 | grams of Fe/day |
| 2.13 | kg of Fe/day |
| 4.69 | Lbs. of Fe/day |
| 3.380 | kg of FeOOH/day |
| 7.437 | Lbs. of FeOOH/day |
| 0.004 | Tons of FeOOH/day |
| 1.357 | Tons of FeOOH/year |
| 0.0010 | $Yard^3$ of FeOOH/day |
| 0.3794 | $Yard^3$ of FeOOH/year |

**Huntington River Diversion to Raw Water Pond**
**Sediment Production to Raw Water Pond versus Production of Goethite**

| Sediment Load to Raw Water Pond | | | | Sediment Load HCC01 | | | Sediment Production to Raw Water Pond | | |
|---|---|---|---|---|---|---|---|---|---|
| Diversion Rate @ Average 7,000/minute | | | | mg/L | | | Load Lbs/day | Tons/day | Yard$^3$ /day |
| | 9,648,000 | gal/day | 9.65 MGD | 35 | mg/L | average | 2,816 | 1.4 | 0.70 |
| Huntington River | 6700 | gpm | | 969 | mg/L | maximum | 77,970 | 39.0 | 19.25 |
| Deer Creek Mine - Rilda | 300 | gpm | | 1 | mg/l | minimum | 80 | 0.04 | 0.02 |
| Diversion Rate @ Average 10,000/minute | | | | mg/L | | | Load Lbs/day | Tons/day | Yard$^3$ /day |
| | 13,968,000 | gal/day | 13.97 MGD | 35 | mg/L | average | 4,077 | 2.0 | 1.01 |
| Huntington River | 9700 | gpm | | 969 | mg/L | maximum | 112,882 | 56.4 | 27.87 |
| Deer Creek Mine - Rilda | 300 | gpm | | 1 | mg/L | maximum | 116 | 0.1 | 0.03 |

**Mine Discharge @ 1.0 mg/L of Total Iron**

| | | | |
|---|---|---|---|
| Flow Rate | 300 | gpm | Input Values |
| Total Iron | 1.3 | mg/L | |
| 1 liter of water contains | 2.20 | Lbs. | 1.3 mg of Fe/liter |
| 1 gallon of water contains | 8.36 | Lbs. | 4.93 mg of Fe/gal |

**Mine Discharge Rate Discharge Rate**

Discharge of 300 gallons per minute (432,000 GPD) at 3.79 milligrams per gallon,

| | | | |
|---|---|---|---|
| Discharge rate | 432,000 | gallons | |
| Milligrams of Fe/gallon | 4.93 | mg/g | 2,129,546 mg of Fe/day |
| | | | 2,129.55 grams of Fe/day |
| | | | 2.13 kg of Fe/day |
| | | | 4.69 Lbs. of Fe/day |
| | | | 3.380 kg of FeOOH/day |
| | | | 7.437 Lbs. of FeOOH/day |
| | | | 0.004 Tons of FeOOH/day |
| | | | 1.357 Tons of FeOOH/year |
| | | | 0.0010 Yard$^3$ of FeOOH/day |
| | | | 0.3794 Yard$^3$ of FeOOH/year |

## Sediment Production to Raw Water Pond versus Production of Goethite (FeOOH)

| | Sediment Load | Sediment Production - Yard$^3$ /day | % of Total Deposition |
|---|---|---|---|
| Diversion Rate @ Average 7,000/minute | 35 mg/L average | 0.70 | 99.85 |
| Diversion Rate @ Average 10,000/minute | 35 mg/L average | 1.01 | 99.90 |

| | Calcualted FeOOH Load | | Production of FeOOH - Yard$^3$ /day |
|---|---|---|---|
| Mine Flow Rate | 300 | gpm | 0.0010 |
| Total Iron of Mine Discharge | 1.3 | mg/L | |

# DEER CREEK MINE

# VOLUME 12

# MILL FORK LEASE

**R645-301-700**

**HYDROLOGY**

# APPENDIX D

**POST MINE CLOSURE HYDROLOGIC ANALYSIS**

- **7th North Sump Discharge January 2016 through December 2016**

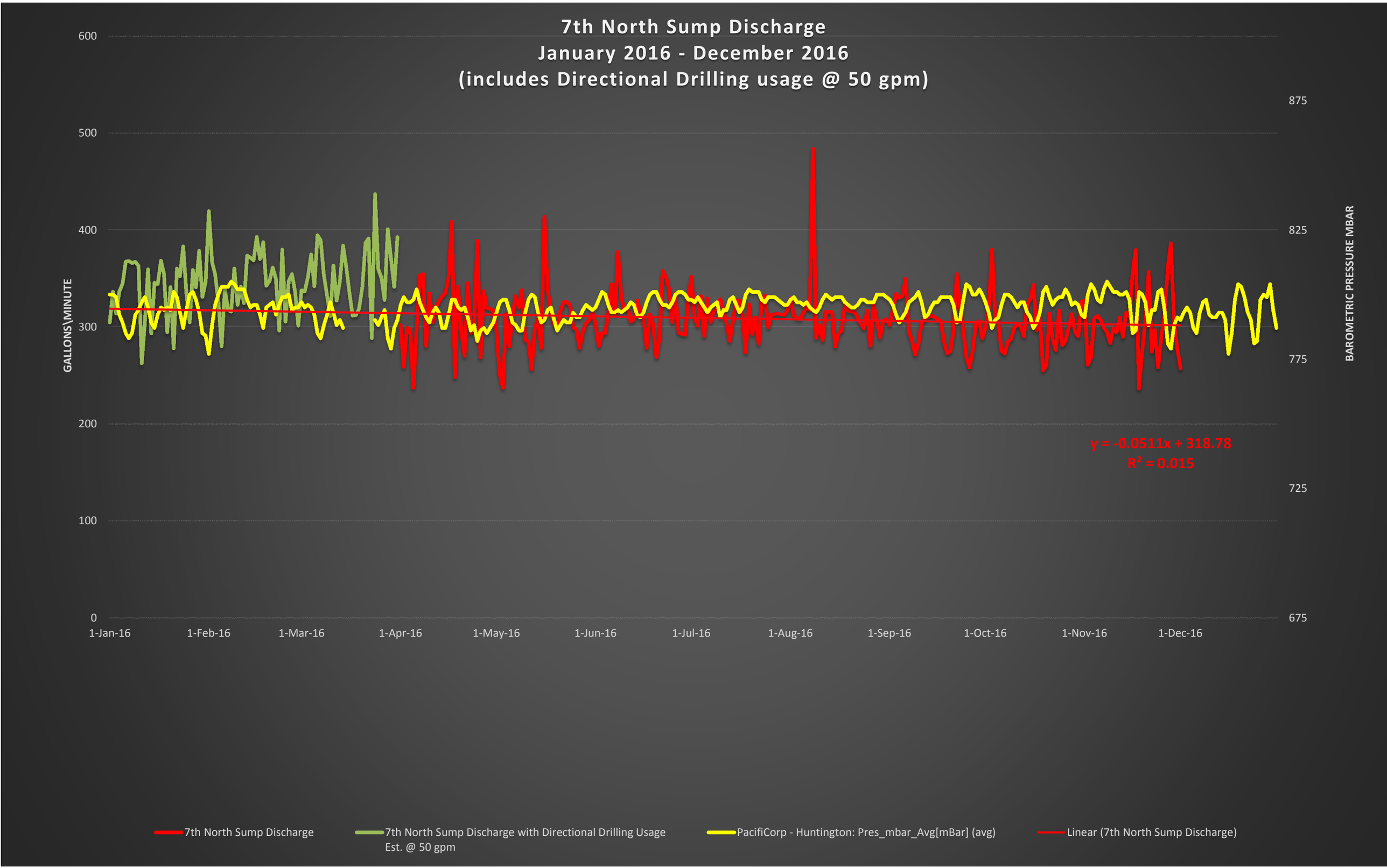
7th North Sump Discharge
January 2016 - December 2016
(includes Directional Drilling usage @ 50 gpm)
GALLONS\MINUTE
BAROMETRIC PRESSURE MBAR
600
500
400
300
200
100
0
875
825
775
725
675
1-Jan-16
1-Feb-16
1-Mar-16
1-Apr-16
1-May-16
1-Jun-16
1-Jul-16
1-Aug-16
1-Sep-16
1-Oct-16
1-Nov-16
1-Dec-16
y = -0.0511x + 318.78
R² = 0.015
7th North Sump Discharge
7th North Sump Discharge with Directional Drilling Usage Est. @ 50 gpm
PacifiCorp - Huntington: Pres_mbar_Avg[mBar] (avg)
Linear (7th North Sump Discharge)

# DEER CREEK MINE

# VOLUME 12

# MILL FORK LEASE

**R645-301-700**

**HYDROLOGY**

# APPENDIX D

**POST MINE CLOSURE HYDROLOGIC ANALYSIS**

- **Deer Creek In-Mine Sealed Area Water Quality Analysis: 2012 – 2016**

SGS

# Analysis Report

May 09, 2012

**PACIFICORP**
FIELD OFFICE
PO BOX 1005
HUNTINGTON UT 84528



| | | | |
|---|---|---|---|
| Client Sample ID: | Deer Creek Mine | Sample ID By: | PacifiCorp |
| Date Sampled: | May 1, 2012 | Sample Taken By: | VBJ |
| Date Received: | May 1, 2012 | Time Received: | 1555 |
| Product Description: | WATER | Time Sampled: | 1415 |
| | | Location: | 11th West Seal 1 |
| | | Field - Flow: | 0.21 GPM |
| | | Field - Temperature: | 1.8 DEG. C |

Comments: Dissolved Metals Filtered at Lab

**SGS Minerals Sample ID: 782-1213303-003**

| TESTS | RESULT | UNIT | METHOD | REPORTING LIMIT | ANALYZED DATE | ANALYZED TIME | ANALYST |
|---|---|---|---|---|---|---|---|
| Hardness, mg equivalent CaCO3/L | 319 | mg/L | SM2340-B | 1 | 2012-05-07 | 10:40:43 | AL |
| Sulfate, SO4 | 41 | mg/L | EPA 300.0 | 1 | 2012-05-03 | 16:37:00 | AL |
| Anions | 10.54 | meq/L | SM1030E | 0 | 2012-05-07 | 10:40:43 | AL |
| Balance | -0.95 | % | SM1030E | -10 | 2012-05-07 | 10:40:43 | AL |
| Cations | 10.34 | meq/L | SM1030E | 0 | 2012-05-07 | 10:40:43 | AL |
| Acidity | 46 | mg/L | D1067 | 5 | 2012-05-08 | 10:55:00 | CM |
| pH | 7.15 | s. u. | SM4500-H | 0.01 | 2012-05-02 | 07:41:00 | AL |
| pH Temperature | 11.50 | °C | SM4500-H | 0.01 | 2012-05-02 | 07:41:00 | AL |
| Conductivity | 922 | µmhos/cm | SM2510 | 0.1 | 2012-05-02 | 07:40:00 | CM |
| Total Dissolved Solids | 544 | mg/L | SM2540-C | 30 | 2012-05-02 | 14:00:00 | AL |
| Chloride, Cl | 8 | mg/L | EPA 300.0 | 1 | 2012-05-03 | 16:37:00 | AL |
| Alkalinity, mg CaCO3/L (pH 4.5) | 473 | mg/L | SM2320-B | 5 | 2012-05-04 | 08:00:00 | AL |
| Carbonate Alkalinity as CaCO3 | <5 | mg/L | SM2320-B | 5 | 2012-05-04 | 08:00:00 | AL |
| Bicarbonate Alkalinity as CaCO3 | 473 | mg/L | SM2320-B | 5 | 2012-05-04 | 08:00:00 | AL |
| **METALS BY ICP** | | | | | | | |
| Calcium, Ca - Dissolved | 80.40 | mg/L | EPA 200.7 | 0.03 | 2012-05-02 | 12:19:00 | CM |
| Iron, Fe - Total | 3.09 | mg/L | EPA 200.7 | 0.05 | 2012-05-07 | 11:21:00 | CM |
| Iron, Fe - Dissolved | 1.19 | mg/L | EPA 200.7 | 0.03 | 2012-05-02 | 12:19:00 | CM |
| Magnesium, Mg - Dissolved | 28.68 | mg/L | EPA 200.7 | 0.01 | 2012-05-02 | 12:19:00 | CM |
| Manganese, Mn - Total | 0.108 | mg/L | EPA 200.7 | 0.002 | 2012-05-07 | 11:21:00 | CM |
| Manganese, Mn - Dissolved | 0.108 | mg/L | EPA 200.7 | 0.002 | 2012-05-02 | 12:19:00 | CM |
| Potassium, K - Dissolved | 10.23 | mg/L | EPA 200.7 | 0.14 | 2012-05-02 | 12:19:00 | CM |

Lab Supervisor

Domenic Ibanez
Lab Supervisor

SGS North America Inc. | Minerals Services Division
2035 North Airport Road Huntington UT 84528 t (435) 653-2311 f (435)-653-2436 www.sgs.com/minerals

Member of the SGS Group (Société Générale de Surveillance)

*This document is issued by the Company under its General Conditions of Service accessible at http://www.sgs.com/terms_and_conditions.htm. Attention is drawn to the limitation of liability, indemnification and jurisdiction issues defined therein.*

*Any holder of this document is advised that information contained hereon reflects the Company's findings at the time of its intervention only and within the limits of Client's instructions, if any. The Company's sole responsibility is to its Client and this document does not exonerate parties to a transaction from exercising all their rights and obligations under the transaction documents. Any unauthorized alteration, forgery or falsification of the content or appearance of this document is unlawful and offenders may be prosecuted to the fullest extent of the law*

SGS

# Analysis Report

May 09, 2012

**PACIFICORP**
FIELD OFFICE
PO BOX 1005
HUNTINGTON UT 84528



| | | | |
|---|---|---|---|
| Client Sample ID: | Deer Creek Mine | Sample ID By: | PacifiCorp |
| Date Sampled: | May 1, 2012 | Sample Taken By: | VBJ |
| Date Received: | May 1, 2012 | Time Received: | 1555 |
| Product Description: | WATER | Time Sampled: | 1415 |
| | | Location: | 11th West Seal 1 |
| | | Field - Flow: | 0.21 GPM |
| | | Field - Temperature: | 1.8 DEG. C |

Comments: Dissolved Metals Filtered at Lab

**SGS Minerals Sample ID: 782-1213303-003**

| TESTS | RESULT | UNIT | METHOD | REPORTING LIMIT | ANALYZED DATE | ANALYZED TIME | ANALYST |
|---|---|---|---|---|---|---|---|
| **METALS BY ICP (continued)** | | | | | | | |
| Sodium, Na - Dissolved | 85.14 | mg/L | EPA 200.7 | 0.09 | 2012-05-02 | 12:19:00 | CM |

Lab Supervisor

Domenic Ibanez
Lab Supervisor

SGS North America Inc. | Minerals Services Division
2035 North Airport Road Huntington UT 84528 t (435) 653-2311 f (435)-653-2436 www.sgs.com/minerals

Member of the SGS Group (Société Générale de Surveillance)

*This document is issued by the Company under its General Conditions of Service accessible at http://www.sgs.com/terms_and_conditions.htm. Attention is drawn to the limitation of liability, indemnification and jurisdiction issues defined therein.*

*Any holder of this document is advised that information contained hereon reflects the Company's findings at the time of its intervention only and within the limits of Client's instructions, if any. The Company's sole responsibility is to its Client and this document does not exonerate parties to a transaction from exercising all their rights and obligations under the transaction documents. Any unauthorized alteration, forgery or falsification of the content or appearance of this document is unlawful and offenders may be prosecuted to the fullest extent of the law*

# Analysis Report

May 09, 2012

**PACIFICORP**
FIELD OFFICE
PO BOX 1005
HUNTINGTON UT 84528



| | | | |
|---|---|---|---|
| Client Sample ID: | Deer Creek Mine | Sample ID By: | PacifiCorp |
| Date Sampled: | May 1, 2012 | Sample Taken By: | VBJ |
| Date Received: | May 1, 2012 | Time Received: | 1555 |
| Product Description: | WATER | Time Sampled: | 1326 |
| | | Location: | 17 W #2 Seal |
| | | Field - Temperature: | 13.0 DEG. C |

Comments: Dissolved Metals Filtered at Lab

**SGS Minerals Sample ID: 782-1213303-002**

| TESTS | RESULT | UNIT | METHOD | REPORTING LIMIT | ANALYZED DATE | ANALYZED TIME | ANALYST |
|---|---|---|---|---|---|---|---|
| Hardness, mg equivalent CaCO3/L | 386 | mg/L | SM2340-B | 1 | 2012-05-07 | 10:40:43 | AL |
| Sulfate, SO4 | 153 | mg/L | EPA 300.0 | 1 | 2012-05-03 | 16:37:00 | AL |
| Anions | 10.96 | meq/L | SM1030E | 0 | 2012-05-07 | 10:40:43 | AL |
| Balance | 0.02 | % | SM1030E | -10 | 2012-05-07 | 10:40:43 | AL |
| Cations | 10.96 | meq/L | SM1030E | 0 | 2012-05-07 | 10:40:43 | AL |
| Acidity | 13 | mg/L | D1067 | 5 | 2012-05-08 | 10:55:00 | CM |
| pH | 7.45 | s. u. | SM4500-H | 0.01 | 2012-05-02 | 07:39:00 | AL |
| pH Temperature | 10.80 | °C | SM4500-H | 0.01 | 2012-05-02 | 07:39:00 | AL |
| Conductivity | 968 | µmhos/cm | SM2510 | 0.1 | 2012-05-02 | 07:40:00 | CM |
| Total Dissolved Solids | 606 | mg/L | SM2540-C | 30 | 2012-05-02 | 14:00:00 | AL |
| Chloride, Cl | 12 | mg/L | EPA 300.0 | 1 | 2012-05-03 | 16:37:00 | AL |
| Alkalinity, mg CaCO3/L (pH 4.5) | 372 | mg/L | SM2320-B | 5 | 2012-05-04 | 08:00:00 | AL |
| Carbonate Alkalinity as CaCO3 | <5 | mg/L | SM2320-B | 5 | 2012-05-04 | 08:00:00 | AL |
| Bicarbonate Alkalinity as CaCO3 | 372 | mg/L | SM2320-B | 5 | 2012-05-04 | 08:00:00 | AL |
| **METALS BY ICP** | | | | | | | |
| Calcium, Ca - Dissolved | 73.70 | mg/L | EPA 200.7 | 0.03 | 2012-05-02 | 12:19:00 | CM |
| Iron, Fe - Total | 3.24 | mg/L | EPA 200.7 | 0.05 | 2012-05-07 | 11:21:00 | CM |
| Iron, Fe - Dissolved | <0.03 | mg/L | EPA 200.7 | 0.03 | 2012-05-02 | 12:19:00 | CM |
| Magnesium, Mg - Dissolved | 49.15 | mg/L | EPA 200.7 | 0.01 | 2012-05-02 | 12:19:00 | CM |
| Manganese, Mn - Total | 0.029 | mg/L | EPA 200.7 | 0.002 | 2012-05-07 | 11:21:00 | CM |
| Manganese, Mn - Dissolved | 0.029 | mg/L | EPA 200.7 | 0.002 | 2012-05-02 | 12:19:00 | CM |
| Potassium, K - Dissolved | 11.80 | mg/L | EPA 200.7 | 0.14 | 2012-05-02 | 12:19:00 | CM |
| Sodium, Na - Dissolved | 67.62 | mg/L | EPA 200.7 | 0.09 | 2012-05-02 | 12:19:00 | CM |

Lab Supervisor

Domenic Ibanez
Lab Supervisor

SGS North America Inc. | Minerals Services Division
2035 North Airport Road Huntington UT 84528 t (435) 653-2311 f (435)-653-2436 www.sgs.com/minerals

Member of the SGS Group (Société Générale de Surveillance)

*This document is issued by the Company under its General Conditions of Service accessible at http://www.sgs.com/terms_and_conditions.htm. Attention is drawn to the limitation of liability, indemnification and jurisdiction issues defined therein.*

*Any holder of this document is advised that information contained hereon reflects the Company's findings at the time of its intervention only and within the limits of Client's instructions, if any. The Company's sole responsibility is to its Client and this document does not exonerate parties to a transaction from exercising all their rights and obligations under the transaction documents. Any unauthorized alteration, forgery or falsification of the content or appearance of this document is unlawful and offenders may be prosecuted to the fullest extent of the law*

# Analysis Report

May 09, 2012

**PACIFICORP**
FIELD OFFICE
PO BOX 1005
HUNTINGTON UT 84528



| | | | |
|---|---|---|---|
| Client Sample ID: | Deer Creek Mine | Sample ID By: | PacifiCorp |
| Date Sampled: | May 1, 2012 | Sample Taken By: | VBJ |
| Date Received: | May 1, 2012 | Time Received: | 1555 |
| Product Description: | WATER | Time Sampled: | 1240 |
| | | Location: | 10N XC-5 Borehole |
| Comments: | Dissolved Metals Filtered at Lab | | |

**SGS Minerals Sample ID: 782-1213303-001**

| TESTS | RESULT | UNIT | METHOD | REPORTING LIMIT | ANALYZED DATE | ANALYZED TIME | ANALYST |
|---|---|---|---|---|---|---|---|
| Hardness, mg equivalent CaCO3/L | 390 | mg/L | SM2340-B | 1 | 2012-05-07 | 10:40:43 | AL |
| Sulfate, SO4 | 210 | mg/L | EPA 300.0 | 1 | 2012-05-03 | 16:37:00 | AL |
| Anions | 12.56 | meq/L | SM1030E | 0 | 2012-05-07 | 10:40:43 | AL |
| Balance | 1.55 | % | SM1030E | -10 | 2012-05-07 | 10:40:43 | AL |
| Cations | 12.95 | meq/L | SM1030E | 0 | 2012-05-07 | 10:40:43 | AL |
| Acidity | 13 | mg/L | D1067 | 5 | 2012-05-08 | 10:55:00 | CM |
| pH | 7.61 | s. u. | SM4500-H | 0.01 | 2012-05-02 | 07:37:00 | AL |
| pH Temperature | 10.90 | °C | SM4500-H | 0.01 | 2012-05-02 | 07:37:00 | AL |
| Conductivity | 1111 | µmhos/cm | SM2510 | 0.1 | 2012-05-02 | 07:40:00 | CM |
| Total Dissolved Solids | 722 | mg/L | SM2540-C | 30 | 2012-05-02 | 14:00:00 | AL |
| Chloride, Cl | 8 | mg/L | EPA 300.0 | 1 | 2012-05-03 | 16:37:00 | AL |
| Alkalinity, mg CaCO3/L (pH 4.5) | 398 | mg/L | SM2320-B | 5 | 2012-05-04 | 08:00:00 | AL |
| Carbonate Alkalinity as CaCO3 | <5 | mg/L | SM2320-B | 5 | 2012-05-04 | 08:00:00 | AL |
| Bicarbonate Alkalinity as CaCO3 | 398 | mg/L | SM2320-B | 5 | 2012-05-04 | 08:00:00 | AL |
| **METALS BY ICP** | | | | | | | |
| Calcium, Ca - Dissolved | 74.45 | mg/L | EPA 200.7 | 0.03 | 2012-05-02 | 12:19:00 | CM |
| Iron, Fe - Total | <0.05 | mg/L | EPA 200.7 | 0.05 | 2012-05-07 | 11:21:00 | CM |
| Iron, Fe - Dissolved | <0.03 | mg/L | EPA 200.7 | 0.03 | 2012-05-02 | 12:19:00 | CM |
| Magnesium, Mg - Dissolved | 49.57 | mg/L | EPA 200.7 | 0.01 | 2012-05-02 | 12:19:00 | CM |
| Manganese, Mn - Total | <0.002 | mg/L | EPA 200.7 | 0.002 | 2012-05-07 | 11:21:00 | CM |
| Manganese, Mn - Dissolved | <0.002 | mg/L | EPA 200.7 | 0.002 | 2012-05-02 | 12:19:00 | CM |
| Potassium, K - Dissolved | 10.77 | mg/L | EPA 200.7 | 0.14 | 2012-05-02 | 12:19:00 | CM |
| Sodium, Na - Dissolved | 112.30 | mg/L | EPA 200.7 | 0.09 | 2012-05-02 | 12:19:00 | CM |

Lab Supervisor

Domenic Ibanez
Lab Supervisor

SGS North America Inc. | Minerals Services Division
2035 North Airport Road Huntington UT 84528 t (435) 653-2311 f (435)-653-2436 www.sgs.com/minerals

Member of the SGS Group (Société Générale de Surveillance)

*This document is issued by the Company under its General Conditions of Service accessible at http://www.sgs.com/terms_and_conditions.htm. Attention is drawn to the limitation of liability, indemnification and jurisdiction issues defined therein.*

*Any holder of this document is advised that information contained hereon reflects the Company's findings at the time of its intervention only and within the limits of Client's instructions, if any. The Company's sole responsibility is to its Client and this document does not exonerate parties to a transaction from exercising all their rights and obligations under the transaction documents. Any unauthorized alteration, forgery or falsification of the content or appearance of this document is unlawful and offenders may be prosecuted to the fullest extent of the law*

SGS

# Analysis Report

July 13, 2012

**PACIFICORP**
FIELD OFFICE
PO BOX 1005
HUNTINGTON UT 84528



| | | | |
|---|---|---|---|
| Client Sample ID: | Deer Creek Mine | Sample ID By: | PacifiCorp |
| Date Sampled: | Jun 27, 2012 | Sample Taken By: | VBJ |
| Date Received: | Jun 27, 2012 | Time Received: | 1545 |
| Product Description: | WATER | Time Sampled: | 1245 |
| | | Location: | 11th West Seal 1 |
| | | Mine: | 4 |
| | | Field - Temperature: | 7.1 DEG. C |

Comments: Dissolved Metals Filtered at Lab

**SGS Minerals Sample ID: 782-1214250-005**

| TESTS | RESULT | UNIT | METHOD | REPORTING LIMIT | ANALYZED DATE | ANALYZED TIME | ANALYST |
|---|---|---|---|---|---|---|---|
| Hardness, mg equivalent CaCO3/L | 286 | mg/L | SM2340-B | 1 | 2012-07-05 | 15:42:52 | AL |
| Acidity | 45 | mg/L | D1067 | 5 | 2012-07-02 | 10:50:00 | AL |
| Sulfate, SO4 | 40 | mg/L | EPA 300.0 | 1 | 2012-07-03 | 00:05:00 | CM |
| Anions | 10.31 | meq/L | SM1030E | 0 | 2012-07-05 | 15:42:52 | AL |
| Balance | -3.54 | % | SM1030E | -10 | 2012-07-05 | 15:42:52 | AL |
| Cations | 9.60 | meq/L | SM1030E | 0 | 2012-07-05 | 15:42:52 | AL |
| pH | 7.19 | s. u. | SM4500-H | 0.01 | 2012-06-28 | 09:45:00 | AL |
| pH Temperature | 18.00 | °C | SM4500-H | 0.01 | 2012-06-28 | 09:45:00 | AL |
| Conductivity | 944 | µmhos/cm | SM2510 | 0.1 | 2012-06-28 | 09:40:00 | AL |
| Total Dissolved Solids | 525 | mg/L | SM2540-C | 30 | 2012-06-28 | 15:00:00 | AL |
| Chloride, Cl | 8 | mg/L | EPA 300.0 | 1 | 2012-07-03 | 00:05:00 | CM |
| Alkalinity, mg CaCO3/L (pH 4.5) | 462 | mg/L | SM2320-B | 5 | 2012-06-29 | 09:25:00 | CM |
| Carbonate Alkalinity as CaCO3 | <5 | mg/L | SM2320-B | 5 | 2012-06-29 | 09:25:00 | CM |
| Bicarbonate Alkalinity as CaCO3 | 462 | mg/L | SM2320-B | 5 | 2012-06-29 | 09:25:00 | CM |
| **METALS BY ICP** | | | | | | | |
| Calcium, Ca - Dissolved | 70.95 | mg/L | EPA 200.7 | 0.03 | 2012-07-03 | 21:21:00 | AL |
| Iron, Fe - Total | 1.56 | mg/L | EPA 200.7 | 0.05 | 2012-07-11 | 22:25:00 | AL |
| Iron, Fe - Dissolved | <0.03 | mg/L | EPA 200.7 | 0.03 | 2012-07-03 | 21:21:00 | AL |
| Magnesium, Mg - Dissolved | 26.48 | mg/L | EPA 200.7 | 0.01 | 2012-07-03 | 21:21:00 | AL |
| Manganese, Mn - Total | 0.096 | mg/L | EPA 200.7 | 0.002 | 2012-07-11 | 22:25:00 | AL |
| Manganese, Mn - Dissolved | 0.089 | mg/L | EPA 200.7 | 0.002 | 2012-07-03 | 21:21:00 | AL |
| Potassium, K - Dissolved | 9.73 | mg/L | EPA 200.7 | 0.14 | 2012-07-03 | 21:21:00 | AL |

Lab Supervisor

Domenic Ibanez
Lab Supervisor

SGS North America inc. | Minerals Services Division
2035 North Airport Road Huntington UT 84528 t (435) 653-2311 f (435)-653-2436 www.sgs.com/minerals

Member of the SGS Group (Société Générale de Surveillance)

*This document is issued by the Company under its General Conditions of Service accessible at http://www.sgs.com/terms_and_conditions.htm. Attention is drawn to the limitation of liability, indemnification and jurisdiction issues defined therein.*

*Any holder of this document is advised that information contained hereon reflects the Company's findings at the time of its intervention only and within the limits of Client's instructions, if any. The Company's sole responsibility is to its Client and this document does not exonerate parties to a transaction from exercising all their rights and obligations under the transaction documents. Any unauthorized alteration, forgery or falsification of the content or appearance of this document is unlawful and offenders may be prosecuted to the fullest extent of the law*

# Analysis Report

July 13, 2012

**PACIFICORP**
FIELD OFFICE
PO BOX 1005
HUNTINGTON UT 84528



| | | | |
|---|---|---|---|
| Client Sample ID: | Deer Creek Mine | Sample ID By: | PacifiCorp |
| Date Sampled: | Jun 27, 2012 | Sample Taken By: | VBJ |
| Date Received: | Jun 27, 2012 | Time Received: | 1545 |
| Product Description: | WATER | Time Sampled: | 1245 |
| | | Location: | 11th West Seal 1 |
| | | Mine: | 4 |
| | | Field - Temperature: | 7.1 DEG. C |
| Comments: | Dissolved Metals Filtered at Lab | | |

**SGS Minerals Sample ID: 782-1214250-005**

| TESTS | RESULT | UNIT | METHOD | REPORTING LIMIT | ANALYZED DATE | ANALYZED TIME | ANALYST |
|---|---|---|---|---|---|---|---|
| **METALS BY ICP (continued)** | | | | | | | |
| Sodium, Na - Dissolved | 83.61 | mg/L | EPA 200.7 | 0.09 | 2012-07-03 | 21:21:00 | AL |

Lab Supervisor

Domenic Ibanez
Lab Supervisor



*This document is issued by the Company under its General Conditions of Service accessible at http://www.sgs.com/terms_and_conditions.htm. Attention is drawn to the limitation of liability, indemnification and jurisdiction issues defined therein.*

*Any holder of this document is advised that information contained hereon reflects the Company's findings at the time of its intervention only and within the limits of Client's instructions, if any. The Company's sole responsibility is to its Client and this document does not exonerate parties to a transaction from exercising all their rights and obligations under the transaction documents. Any unauthorized alteration, forgery or falsification of the content or appearance of this document is unlawful and offenders may be prosecuted to the fullest extent of the law*

SGS

# Analysis Report

July 13, 2012

**PACIFICORP**
FIELD OFFICE
PO BOX 1005
HUNTINGTON UT 84528



| | | | |
|---|---|---|---|
| Client Sample ID: | Deer Creek Mine | Sample ID By: | PacifiCorp |
| Date Sampled: | Jun 27, 2012 | Sample Taken By: | VBJ |
| Date Received: | Jun 27, 2012 | Time Received: | 1545 |
| Product Description: | WATER | Time Sampled: | 1155 |
| | | Location: | 17W #2 Seal |
| | | Mine: | 4 |
| | | Field - Temperature: | 12.7 DEG. C |

Comments: Dissolved Metals Filtered at Lab

**SGS Minerals Sample ID: 782-1214250-004**

| TESTS | RESULT | UNIT | METHOD | REPORTING LIMIT | ANALYZED DATE | ANALYZED TIME | ANALYST |
|---|---|---|---|---|---|---|---|
| Hardness, mg equivalent CaCO3/L | 351 | mg/L | SM2340-B | 1 | 2012-07-05 | 15:42:52 | AL |
| Acidity | 19 | mg/L | D1067 | 5 | 2012-07-02 | 10:50:00 | AL |
| Sulfate, SO4 | 147 | mg/L | EPA 300.0 | 1 | 2012-07-03 | 00:05:00 | CM |
| Anions | 10.81 | meq/L | SM1030E | 0 | 2012-07-05 | 15:42:52 | AL |
| Balance | -2.54 | % | SM1030E | -10 | 2012-07-05 | 15:42:52 | AL |
| Cations | 10.28 | meq/L | SM1030E | 0 | 2012-07-05 | 15:42:52 | AL |
| pH | 7.47 | s. u. | SM4500-H | 0.01 | 2012-06-28 | 09:43:00 | AL |
| pH Temperature | 17.00 | °C | SM4500-H | 0.01 | 2012-06-28 | 09:43:00 | AL |
| Conductivity | 970 | µmhos/cm | SM2510 | 0.1 | 2012-06-28 | 09:40:00 | AL |
| Total Dissolved Solids | 581 | mg/L | SM2540-C | 30 | 2012-06-28 | 15:00:00 | AL |
| Chloride, Cl | 12 | mg/L | EPA 300.0 | 1 | 2012-07-03 | 00:05:00 | CM |
| Alkalinity, mg CaCO3/L (pH 4.5) | 371 | mg/L | SM2320-B | 5 | 2012-06-29 | 09:25:00 | CM |
| Carbonate Alkalinity as CaCO3 | <5 | mg/L | SM2320-B | 5 | 2012-06-29 | 09:25:00 | CM |
| Bicarbonate Alkalinity as CaCO3 | 371 | mg/L | SM2320-B | 5 | 2012-06-29 | 09:25:00 | CM |
| **METALS BY ICP** | | | | | | | |
| Calcium, Ca - Dissolved | 65.35 | mg/L | EPA 200.7 | 0.03 | 2012-07-03 | 21:21:00 | AL |
| Iron, Fe - Total | 3.25 | mg/L | EPA 200.7 | 0.05 | 2012-07-11 | 22:25:00 | AL |
| Iron, Fe - Dissolved | <0.03 | mg/L | EPA 200.7 | 0.03 | 2012-07-03 | 21:21:00 | AL |
| Magnesium, Mg - Dissolved | 45.58 | mg/L | EPA 200.7 | 0.01 | 2012-07-03 | 21:21:00 | AL |
| Manganese, Mn - Total | 0.027 | mg/L | EPA 200.7 | 0.002 | 2012-07-11 | 22:25:00 | AL |
| Manganese, Mn - Dissolved | 0.025 | mg/L | EPA 200.7 | 0.002 | 2012-07-03 | 21:21:00 | AL |
| Potassium, K - Dissolved | 11.51 | mg/L | EPA 200.7 | 0.14 | 2012-07-03 | 21:21:00 | AL |

Lab Supervisor

Domenic Ibanez
Lab Supervisor

SGS North America Inc. | Minerals Services Division
2035 North Airport Road Huntington UT 84528 t (435) 653-2311 f (435)-653-2436 www.sgs.com/minerals

Member of the SGS Group (Société Générale de Surveillance)

*This document is issued by the Company under its General Conditions of Service accessible at http://www.sgs.com/terms_and_conditions.htm. Attention is drawn to the limitation of liability, indemnification and jurisdiction issues defined therein.*

*Any holder of this document is advised that information contained hereon reflects the Company's findings at the time of its intervention only and within the limits of Client's instructions, if any. The Company's sole responsibility is to its Client and this document does not exonerate parties to a transaction from exercising all their rights and obligations under the transaction documents. Any unauthorized alteration, forgery or falsification of the content or appearance of this document is unlawful and offenders may be prosecuted to the fullest extent of the law*

# Analysis Report

July 13, 2012

**PACIFICORP**
FIELD OFFICE
PO BOX 1005
HUNTINGTON UT 84528



| | | | |
|---|---|---|---|
| Client Sample ID: | Deer Creek Mine | Sample ID By: | PacifiCorp |
| Date Sampled: | Jun 27, 2012 | Sample Taken By: | VBJ |
| Date Received: | Jun 27, 2012 | Time Received: | 1545 |
| Product Description: | WATER | Time Sampled: | 1155 |
| | | Location: | 17W #2 Seal |
| | | Mine: | 4 |
| | | Field - Temperature: | 12.7 DEG. C |

Comments: Dissolved Metals Filtered at Lab

**SGS Minerals Sample ID: 782-1214250-004**

| TESTS | RESULT | UNIT | METHOD | REPORTING LIMIT | ANALYZED DATE | ANALYZED TIME | ANALYST |
|---|---|---|---|---|---|---|---|
| **METALS BY ICP (continued)** | | | | | | | |
| Sodium, Na - Dissolved | 68.29 | mg/L | EPA 200.7 | 0.09 | 2012-07-03 | 21:21:00 | AL |

Lab Supervisor

Domenic Ibanez
Lab Supervisor

SGS North America Inc. | Minerals Services Division
2035 North Airport Road Huntington UT 84528 t (435) 653-2311 f (435)-653-2436 www.sgs.com/minerals

Member of the SGS Group (Société Générale de Surveillance)

*This document is issued by the Company under its General Conditions of Service accessible at http://www.sgs.com/terms_and_conditions.htm. Attention is drawn to the limitation of liability, indemnification and jurisdiction issues defined therein.*

*Any holder of this document is advised that information contained hereon reflects the Company's findings at the time of its intervention only and within the limits of Client's instructions, if any. The Company's sole responsibility is to its Client and this document does not exonerate parties to a transaction from exercising all their rights and obligations under the transaction documents. Any unauthorized alteration, forgery or falsification of the content or appearance of this document is unlawful and offenders may be prosecuted to the fullest extent of the law*

# Analysis Report

July 13, 2012

**PACIFICORP**
FIELD OFFICE
PO BOX 1005
HUNTINGTON UT 84528



| | | | |
|---|---|---|---|
| Client Sample ID: | Deer Creek Mine | Sample ID By: | PacifiCorp |
| Date Sampled: | Jun 27, 2012 | Sample Taken By: | VBJ |
| Date Received: | Jun 27, 2012 | Time Received: | 1545 |
| Product Description: | WATER | Time Sampled: | 1130 |
| | | Location: | 10N XC-5 Borehole |
| | | Mine: | 4 |
| | | Field - Temperature: | 12.5 DEG. C |

Comments: Dissolved Metals Filtered at Lab

**SGS Minerals Sample ID: 782-1214250-003**

| TESTS | RESULT | UNIT | METHOD | REPORTING LIMIT | ANALYZED DATE | ANALYZED TIME | ANALYST |
|---|---|---|---|---|---|---|---|
| Hardness, mg equivalent CaCO3/L | 369 | mg/L | SM2340-B | 1 | 2012-07-05 | 15:42:52 | AL |
| Acidity | 10 | mg/L | D1067 | 5 | 2012-07-02 | 10:50:00 | AL |
| Sulfate, SO4 | 226 | mg/L | EPA 300.0 | 1 | 2012-07-03 | 00:05:00 | CM |
| Anions | 13.02 | meq/L | SM1030E | 0 | 2012-07-05 | 15:42:52 | AL |
| Balance | -3.26 | % | SM1030E | -10 | 2012-07-05 | 15:42:52 | AL |
| Cations | 12.20 | meq/L | SM1030E | 0 | 2012-07-05 | 15:42:52 | AL |
| pH | 7.62 | s. u. | SM4500-H | 0.01 | 2012-06-28 | 09:41:00 | AL |
| pH Temperature | 17.60 | °C | SM4500-H | 0.01 | 2012-06-28 | 09:41:00 | AL |
| Conductivity | 1165 | µmhos/cm | SM2510 | 0.1 | 2012-06-28 | 09:40:00 | AL |
| Total Dissolved Solids | 718 | mg/L | SM2540-C | 30 | 2012-06-28 | 15:00:00 | AL |
| Chloride, Cl | 7 | mg/L | EPA 300.0 | 1 | 2012-07-03 | 00:05:00 | CM |
| Alkalinity, mg CaCO3/L (pH 4.5) | 406 | mg/L | SM2320-B | 5 | 2012-06-29 | 09:25:00 | CM |
| Carbonate Alkalinity as CaCO3 | <5 | mg/L | SM2320-B | 5 | 2012-06-29 | 09:25:00 | CM |
| Bicarbonate Alkalinity as CaCO3 | 406 | mg/L | SM2320-B | 5 | 2012-06-29 | 09:25:00 | CM |
| **METALS BY ICP** | | | | | | | |
| Calcium, Ca - Dissolved | 68.56 | mg/L | EPA 200.7 | 0.03 | 2012-07-03 | 21:21:00 | AL |
| Iron, Fe - Total | 0.06 | mg/L | EPA 200.7 | 0.05 | 2012-07-11 | 22:25:00 | AL |
| Iron, Fe - Dissolved | <0.03 | mg/L | EPA 200.7 | 0.03 | 2012-07-03 | 21:21:00 | AL |
| Magnesium, Mg - Dissolved | 47.97 | mg/L | EPA 200.7 | 0.01 | 2012-07-03 | 21:21:00 | AL |
| Manganese, Mn - Total | <0.002 | mg/L | EPA 200.7 | 0.002 | 2012-07-11 | 22:25:00 | AL |
| Manganese, Mn - Dissolved | <0.002 | mg/L | EPA 200.7 | 0.002 | 2012-07-03 | 21:21:00 | AL |
| Potassium, K - Dissolved | 10.33 | mg/L | EPA 200.7 | 0.14 | 2012-07-03 | 21:21:00 | AL |

Lab Supervisor

Domenic Ibanez
Lab Supervisor

SGS North America Inc. | Minerals Services Division
2035 North Airport Road Huntington UT 84528 t (435) 653-2311 f (435)-653-2436 www.sgs.com/minerals

Member of the SGS Group (Société Générale de Surveillance)

*This document is issued by the Company under its General Conditions of Service accessible at http://www.sgs.com/terms_and_conditions.htm. Attention is drawn to the limitation of liability, indemnification and jurisdiction issues defined therein.*

*Any holder of this document is advised that information contained hereon reflects the Company's findings at the time of its intervention only and within the limits of Client's instructions, if any. The Company's sole responsibility is to its Client and this document does not exonerate parties to a transaction from exercising all their rights and obligations under the transaction documents. Any unauthorized alteration, forgery or falsification of the content or appearance of this document is unlawful and offenders may be prosecuted to the fullest extent of the law*

# Analysis Report

July 13, 2012

**PACIFICORP**
FIELD OFFICE
PO BOX 1005
HUNTINGTON UT 84528



| | | | |
|---|---|---|---|
| Client Sample ID: | Deer Creek Mine | Sample ID By: | PacifiCorp |
| Date Sampled: | Jun 27, 2012 | Sample Taken By: | VBJ |
| Date Received: | Jun 27, 2012 | Time Received: | 1545 |
| Product Description: | WATER | Time Sampled: | 1130 |
| | | Location: | 10N XC-5 Borehole |
| | | Mine: | 4 |
| | | Field - Temperature: | 12.5 DEG. C |
| Comments: | Dissolved Metals Filtered at Lab | | |

**SGS Minerals Sample ID: 782-1214250-003**

| TESTS | RESULT | UNIT | METHOD | REPORTING LIMIT | ANALYZED DATE | ANALYZED TIME | ANALYST |
|---|---|---|---|---|---|---|---|
| **METALS BY ICP (continued)** | | | | | | | |
| Sodium, Na - Dissolved | 104.96 | mg/L | EPA 200.7 | 0.09 | 2012-07-03 | 21:21:00 | AL |

Lab Supervisor

Domenic Ibanez
Lab Supervisor

SGS North America Inc. | Minerals Services Division
2035 North Airport Road Huntington UT 84528 t (435) 653-2311 f (435)-653-2436 www.sgs.com/minerals

Member of the SGS Group (Société Générale de Surveillance)

*This document is issued by the Company under its General Conditions of Service accessible at http://www.sgs.com/terms_and_conditions.htm. Attention is drawn to the limitation of liability, indemnification and jurisdiction issues defined therein.*

*Any holder of this document is advised that information contained hereon reflects the Company's findings at the time of its intervention only and within the limits of Client's instructions, if any. The Company's sole responsibility is to its Client and this document does not exonerate parties to a transaction from exercising all their rights and obligations under the transaction documents. Any unauthorized alteration, forgery or falsification of the content or appearance of this document is unlawful and offenders may be prosecuted to the fullest extent of the law*

# Analysis Report

October 10, 2012

**PACIFICORP**
FIELD OFFICE
PO BOX 1005
HUNTINGTON UT 84528



ATTN: Invoice Contact

| | | | |
|---|---|---|---|
| Client Sample ID: | Deer Creek Mine | Sample ID By: | PacifiCorp |
| Date Sampled: | Sep 27, 2012 | Sample Taken By: | VBJ |
| Date Received: | Sep 27, 2012 | Time Received: | 1512 |
| Product Description: | WATER | Time Sampled: | 1040 |
| | | Location: | 11th West #1 Seal |
| | | Mine: | 4 |
| | | Field - pH: | 6.9 pH units |
| | | Field - Temperature: | 15.5 DEG. C |

Comments: Dissolved Metals Filtered at Lab

**SGS Minerals Sample ID: 782-1215662-003**

| TESTS | RESULT | UNIT | METHOD | REPORTING LIMIT | ANALYZED DATE | ANALYZED TIME | ANALYST |
|---|---|---|---|---|---|---|---|
| Hardness, mg equivalent CaCO3/L | 307 | mg/L | SM2340-B | 1 | 2012-10-09 | 15:41:18 | AL |
| Acidity | 43 | mg/L | D1067 | 5 | 2012-10-02 | 12:45:00 | AL |
| Anions | 10.31 | meq/L | SM1030E | 0 | 2012-10-09 | 15:41:18 | AL |
| Balance | -0.41 | % | SM1030E | -10 | 2012-10-09 | 15:41:18 | AL |
| Cations | 10.22 | meq/L | SM1030E | 0 | 2012-10-09 | 15:41:18 | AL |
| Alkalinity, mg CaCO3/L (pH 4.5) | 465 | mg/L | SM2320-B | 5 | 2012-10-02 | 09:05:00 | AL |
| Bicarbonate Alkalinity as CaCO3 | 465 | mg/L | SM2320-B | 5 | 2012-10-02 | 09:05:00 | AL |
| Carbonate Alkalinity as CaCO3 | <5 | mg/L | SM2320-B | 5 | 2012-10-02 | 09:05:00 | AL |
| pH | 7.13 | s. u. | SM4500-H | 0.01 | 2012-09-28 | 08:09:00 | CM |
| pH Temperature | 15.40 | °C | SM4500-H | 0.01 | 2012-09-28 | 08:09:00 | CM |
| Conductivity | 924 | µmhos/cm | SM2510 | 0.1 | 2012-09-28 | 08:10:00 | CM |
| Total Dissolved Solids | 526 | mg/L | SM2540-C | 30 | 2012-10-01 | 13:45:00 | AL |
| Chloride, Cl | 8 | mg/L | EPA 300.0 | 1 | 2012-10-01 | 23:01:00 | CM |
| Sulfate, SO4 | 38 | mg/L | EPA 300.0 | 1 | 2012-10-01 | 23:01:00 | CM |
| **METALS BY ICP** | | | | | | | |
| Calcium, Ca - Dissolved | 77.40 | mg/L | EPA 200.7 | 0.03 | 2012-10-04 | 17:00:00 | CM |
| Iron, Fe - Total | 2.29 | mg/L | EPA 200.7 | 0.05 | 2012-10-05 | 16:03:00 | CM |
| Iron, Fe - Dissolved | 0.44 | mg/L | EPA 200.7 | 0.03 | 2012-10-04 | 17:00:00 | CM |
| Magnesium, Mg - Dissolved | 27.54 | mg/L | EPA 200.7 | 0.01 | 2012-10-04 | 17:00:00 | CM |
| Manganese, Mn - Total | 0.092 | mg/L | EPA 200.7 | 0.002 | 2012-10-05 | 16:03:00 | CM |
| Manganese, Mn - Dissolved | 0.089 | mg/L | EPA 200.7 | 0.002 | 2012-10-04 | 17:00:00 | CM |

Lab Supervisor

Domenic Ibanez
Lab Supervisor

SGS North America Inc. | Minerals Services Division
2035 North Airport Road Huntington UT 84528 t (435) 653-2311 f (435)-653-2436 www.sgs.com/minerals

Member of the SGS Group (Société Générale de Surveillance)

*This document is issued by the Company under its General Conditions of Service accessible at http://www.sgs.com/terms_and_conditions.htm. Attention is drawn to the limitation of liability, indemnification and jurisdiction issues defined therein.*

*Any holder of this document is advised that information contained hereon reflects the Company's findings at the time of its intervention only and within the limits of Client's instructions, if any. The Company's sole responsibility is to its Client and this document does not exonerate parties to a transaction from exercising all their rights and obligations under the transaction documents. Any unauthorized alteration, forgery or falsification of the content or appearance of this document is unlawful and offenders may be prosecuted to the fullest extent of the law*

SGS

# Analysis Report

October 10, 2012

**PACIFICORP**
FIELD OFFICE
PO BOX 1005
HUNTINGTON UT 84528



ATTN: Invoice Contact

| | | | |
|---|---|---|---|
| Client Sample ID: | Deer Creek Mine | Sample ID By: | PacifiCorp |
| Date Sampled: | Sep 27, 2012 | Sample Taken By: | VBJ |
| Date Received: | Sep 27, 2012 | Time Received: | 1512 |
| Product Description: | WATER | Time Sampled: | 1040 |
| | | Location: | 11th West #1 Seal |
| | | Mine: | 4 |
| | | Field - pH: | 6.9 pH units |
| | | Field - Temperature: | 15.5 DEG. C |

Comments: Dissolved Metals Filtered at Lab

**SGS Minerals Sample ID: 782-1215662-003**

| TESTS | RESULT | UNIT | METHOD | REPORTING LIMIT | ANALYZED DATE | ANALYZED TIME | ANALYST |
|---|---|---|---|---|---|---|---|
| **METALS BY ICP (continued)** | | | | | | | |
| Potassium, K - Dissolved | 10.10 | mg/L | EPA 200.7 | 0.14 | 2012-10-04 | 17:00:00 | CM |
| Sodium, Na - Dissolved | 88.22 | mg/L | EPA 200.7 | 0.09 | 2012-10-04 | 17:00:00 | CM |

Lab Supervisor

Domenic Ibanez
Lab Supervisor

SGS North America Inc. | Minerals Services Division
2035 North Airport Road Huntington UT 84528 t (435) 653-2311 f (435)-653-2436 www.sgs.com/minerals

Member of the SGS Group (Société Générale de Surveillance)

*This document is issued by the Company under its General Conditions of Service accessible at http://www.sgs.com/terms_and_conditions.htm. Attention is drawn to the limitation of liability, indemnification and jurisdiction issues defined therein.*

*Any holder of this document is advised that information contained hereon reflects the Company's findings at the time of its intervention only and within the limits of Client's instructions, if any. The Company's sole responsibility is to its Client and this document does not exonerate parties to a transaction from exercising all their rights and obligations under the transaction documents. Any unauthorized alteration, forgery or falsification of the content or appearance of this document is unlawful and offenders may be prosecuted to the fullest extent of the law*

SGS

# Analysis Report

October 10, 2012



**PACIFICORP**
FIELD OFFICE
PO BOX 1005
HUNTINGTON UT 84528

ATTN: Invoice Contact

| | | | |
|---|---|---|---|
| Client Sample ID: | Deer Creek Mine | Sample ID By: | PacifiCorp |
| Date Sampled: | Sep 27, 2012 | Sample Taken By: | VBJ |
| Date Received: | Sep 27, 2012 | Time Received: | 1512 |
| Product Description: | WATER | Time Sampled: | 1115 |
| | | Location: | 17 W #2 Seal |
| | | Mine: | 4 |
| | | Field - pH: | 7.53 pH units |
| | | Field - Temperature: | 12.7 DEG. C |

Comments: Dissolved Metals Filtered at Lab

**SGS Minerals Sample ID: 782-1215662-004**

| TESTS | RESULT | UNIT | METHOD | REPORTING LIMIT | ANALYZED DATE | TIME | ANALYST |
|---|---|---|---|---|---|---|---|
| Hardness, mg equivalent CaCO3/L | 370 | mg/L | SM2340-B | 1 | 2012-10-09 | 15:41:18 | AL |
| Acidity | 15 | mg/L | D1067 | 5 | 2012-10-02 | 12:45:00 | AL |
| Anions | 10.60 | meq/L | SM1030E | 0 | 2012-10-09 | 15:41:18 | AL |
| Balance | 0.29 | % | SM1030E | -10 | 2012-10-09 | 15:41:18 | AL |
| Cations | 10.66 | meq/L | SM1030E | 0 | 2012-10-09 | 15:41:18 | AL |
| Alkalinity, mg CaCO3/L (pH 4.5) | 370 | mg/L | SM2320-B | 5 | 2012-10-02 | 09:05:00 | AL |
| Bicarbonate Alkalinity as CaCO3 | 370 | mg/L | SM2320-B | 5 | 2012-10-02 | 09:05:00 | AL |
| Carbonate Alkalinity as CaCO3 | <5 | mg/L | SM2320-B | 5 | 2012-10-02 | 09:05:00 | AL |
| pH | 7.52 | s. u. | SM4500-H | 0.01 | 2012-09-28 | 08:11:00 | CM |
| pH Temperature | 15.10 | °C | SM4500-H | 0.01 | 2012-09-28 | 08:11:00 | CM |
| Conductivity | 961 | µmhos/cm | SM2510 | 0.1 | 2012-09-28 | 08:10:00 | CM |
| Total Dissolved Solids | 574 | mg/L | SM2540-C | 30 | 2012-10-01 | 13:45:00 | AL |
| Chloride, Cl | 12 | mg/L | EPA 300.0 | 1 | 2012-10-01 | 23:01:00 | CM |
| Sulfate, SO4 | 138 | mg/L | EPA 300.0 | 1 | 2012-10-01 | 23:01:00 | CM |
| **METALS BY ICP** | | | | | | | |
| Calcium, Ca - Dissolved | 70.73 | mg/L | EPA 200.7 | 0.03 | 2012-10-04 | 17:00:00 | CM |
| Iron, Fe - Total | 3.47 | mg/L | EPA 200.7 | 0.05 | 2012-10-05 | 16:03:00 | CM |
| Iron, Fe - Dissolved | <0.03 | mg/L | EPA 200.7 | 0.03 | 2012-10-04 | 17:00:00 | CM |
| Magnesium, Mg - Dissolved | 46.84 | mg/L | EPA 200.7 | 0.01 | 2012-10-04 | 17:00:00 | CM |
| Manganese, Mn - Total | 0.028 | mg/L | EPA 200.7 | 0.002 | 2012-10-05 | 16:03:00 | CM |
| Manganese, Mn - Dissolved | 0.025 | mg/L | EPA 200.7 | 0.002 | 2012-10-04 | 17:00:00 | CM |

Lab Supervisor

Domenic Ibanez
Lab Supervisor

SGS North America Inc. | Minerals Services Division
2035 North Airport Road Huntington UT 84528 t (435) 653-2311 f (435)-653-2436 www.sgs.com/minerals

Member of the SGS Group (Société Générale de Surveillance)

*This document is issued by the Company under its General Conditions of Service accessible at http://www.sgs.com/terms_and_conditions.htm. Attention is drawn to the limitation of liability, indemnification and jurisdiction issues defined therein.*

*Any holder of this document is advised that information contained hereon reflects the Company's findings at the time of its intervention only and within the limits of Client's instructions, if any. The Company's sole responsibility is to its Client and this document does not exonerate parties to a transaction from exercising all their rights and obligations under the transaction documents. Any unauthorized alteration, forgery or falsification of the content or appearance of this document is unlawful and offenders may be prosecuted to the fullest extent of the law*

# Analysis Report

October 10, 2012

**PACIFICORP**
FIELD OFFICE
PO BOX 1005
HUNTINGTON UT 84528



ATTN: Invoice Contact

| | | | |
|---|---|---|---|
| Client Sample ID: | Deer Creek Mine | Sample ID By: | PacifiCorp |
| Date Sampled: | Sep 27, 2012 | Sample Taken By: | VBJ |
| Date Received: | Sep 27, 2012 | Time Received: | 1512 |
| Product Description: | WATER | Time Sampled: | 1115 |
| | | Location: | 17 W #2 Seal |
| | | Mine: | 4 |
| | | Field - pH: | 7.53 pH units |
| | | Field - Temperature: | 12.7 DEG. C |

Comments: Dissolved Metals Filtered at Lab

**SGS Minerals Sample ID: 782-1215662-004**

| TESTS | RESULT | UNIT | METHOD | REPORTING LIMIT | ANALYZED DATE | TIME | ANALYST |
|---|---|---|---|---|---|---|---|
| **METALS BY ICP (continued)** | | | | | | | |
| Potassium, K - Dissolved | 11.55 | mg/L | EPA 200.7 | 0.14 | 2012-10-04 | 17:00:00 | CM |
| Sodium, Na - Dissolved | 68.60 | mg/L | EPA 200.7 | 0.09 | 2012-10-04 | 17:00:00 | CM |

Lab Supervisor

Domenic Ibanez
Lab Supervisor

SGS North America Inc. | Minerals Services Division
2035 North Airport Road Huntington UT 84528 t (435) 653-2311 f (435)-653-2436 www.sgs.com/minerals

Member of the SGS Group (Société Générale de Surveillance)

*This document is issued by the Company under its General Conditions of Service accessible at http://www.sgs.com/terms_and_conditions.htm. Attention is drawn to the limitation of liability, indemnification and jurisdiction issues defined therein.*

*Any holder of this document is advised that information contained hereon reflects the Company's findings at the time of its intervention only and within the limits of Client's instructions, if any. The Company's sole responsibility is to its Client and this document does not exonerate parties to a transaction from exercising all their rights and obligations under the transaction documents. Any unauthorized alteration, forgery or falsification of the content or appearance of this document is unlawful and offenders may be prosecuted to the fullest extent of the law*

# Analysis Report

October 10, 2012

**PACIFICORP**
FIELD OFFICE
PO BOX 1005
HUNTINGTON UT 84528



ATTN: Invoice Contact

| | | | |
|---|---|---|---|
| Client Sample ID: | Deer Creek Mine | Sample ID By: | PacifiCorp |
| Date Sampled: | Sep 27, 2012 | Sample Taken By: | VBJ |
| Date Received: | Sep 27, 2012 | Time Received: | 1512 |
| Product Description: | WATER | Time Sampled: | 1135 |
| | | Location: | 10N XC-5 Borehole |
| | | Mine: | 4 |
| | | Field - pH: | 7.5 pH units |
| | | Field - Temperature: | 11.9 DEG. C |

Comments: Dissolved Metals Filtered at Lab

**SGS Minerals Sample ID: 782-1215662-005**

| TESTS | RESULT | UNIT | METHOD | REPORTING LIMIT | ANALYZED DATE | TIME | ANALYST |
|---|---|---|---|---|---|---|---|
| Hardness, mg equivalent CaCO3/L | 349 | mg/L | SM2340-B | 1 | 2012-10-09 | 15:41:18 | AL |
| Acidity | 13 | mg/L | D1067 | 5 | 2012-10-02 | 12:45:00 | AL |
| Anions | 12.37 | meq/L | SM1030E | 0 | 2012-10-09 | 15:41:18 | AL |
| Balance | 0.03 | % | SM1030E | -10 | 2012-10-09 | 15:41:18 | AL |
| Cations | 12.37 | meq/L | SM1030E | 0 | 2012-10-09 | 15:41:18 | AL |
| Alkalinity, mg CaCO3/L (pH 4.5) | 412 | mg/L | SM2320-B | 5 | 2012-10-02 | 09:05:00 | AL |
| Bicarbonate Alkalinity as CaCO3 | 412 | mg/L | SM2320-B | 5 | 2012-10-02 | 09:05:00 | AL |
| Carbonate Alkalinity as CaCO3 | <5 | mg/L | SM2320-B | 5 | 2012-10-02 | 09:05:00 | AL |
| pH | 7.60 | s. u. | SM4500-H | 0.01 | 2012-09-28 | 08:13:00 | CM |
| pH Temperature | 15.20 | °C | SM4500-H | 0.01 | 2012-09-28 | 08:13:00 | CM |
| Conductivity | 1120 | µmhos/cm | SM2510 | 0.1 | 2012-09-28 | 08:10:00 | CM |
| Total Dissolved Solids | 693 | mg/L | SM2540-C | 30 | 2012-10-01 | 13:45:00 | AL |
| Chloride, Cl | 7 | mg/L | EPA 300.0 | 1 | 2012-10-01 | 23:01:00 | CM |
| Sulfate, SO4 | 189 | mg/L | EPA 300.0 | 1 | 2012-10-01 | 23:01:00 | CM |
| **METALS BY ICP** | | | | | | | |
| Calcium, Ca - Dissolved | 67.45 | mg/L | EPA 200.7 | 0.03 | 2012-10-04 | 17:00:00 | CM |
| Iron, Fe - Total | <0.05 | mg/L | EPA 200.7 | 0.05 | 2012-10-05 | 16:03:00 | CM |
| Iron, Fe - Dissolved | <0.03 | mg/L | EPA 200.7 | 0.03 | 2012-10-04 | 17:00:00 | CM |
| Magnesium, Mg - Dissolved | 43.94 | mg/L | EPA 200.7 | 0.01 | 2012-10-04 | 17:00:00 | CM |
| Manganese, Mn - Total | <0.002 | mg/L | EPA 200.7 | 0.002 | 2012-10-05 | 16:03:00 | CM |
| Manganese, Mn - Dissolved | <0.002 | mg/L | EPA 200.7 | 0.002 | 2012-10-04 | 17:00:00 | CM |

Lab Supervisor

Domenic Ibanez
Lab Supervisor

SGS North America Inc. | Minerals Services Division
2035 North Airport Road Huntington UT 84528 t (435) 653-2311 f (435)-853-2436 www.sgs.com/minerals

Member of the SGS Group (Société Générale de Surveillance)

*This document is issued by the Company under its General Conditions of Service accessible at http://www.sgs.com/terms_and_conditions.htm. Attention is drawn to the limitation of liability, indemnification and jurisdiction issues defined therein.*

*Any holder of this document is advised that information contained hereon reflects the Company's findings at the time of its intervention only and within the limits of Client's instructions, if any. The Company's sole responsibility is to its Client and this document does not exonerate parties to a transaction from exercising all their rights and obligations under the transaction documents. Any unauthorized alteration, forgery or falsification of the content or appearance of this document is unlawful and offenders may be prosecuted to the fullest extent of the law*

# Analysis Report

October 10, 2012

**PACIFICORP**
FIELD OFFICE
PO BOX 1005
HUNTINGTON UT 84528



ATTN: Invoice Contact

| | | | |
|---|---|---|---|
| Client Sample ID: | Deer Creek Mine | Sample ID By: | PacifiCorp |
| Date Sampled: | Sep 27, 2012 | Sample Taken By: | VBJ |
| Date Received: | Sep 27, 2012 | Time Received: | 1512 |
| Product Description: | WATER | Time Sampled: | 1135 |
| | | Location: | 10N XC-5 Borehole |
| | | Mine: | 4 |
| | | Field - pH: | 7.5 pH units |
| | | Field - Temperature: | 11.9 DEG. C |

Comments: Dissolved Metals Filtered at Lab

**SGS Minerals Sample ID: 782-1215662-005**

| TESTS | RESULT | UNIT | METHOD | REPORTING LIMIT | ANALYZED DATE | ANALYZED TIME | ANALYST |
|---|---|---|---|---|---|---|---|
| **METALS BY ICP (continued)** | | | | | | | |
| Potassium, K - Dissolved | 10.67 | mg/L | EPA 200.7 | 0.14 | 2012-10-04 | 17:00:00 | CM |
| Sodium, Na - Dissolved | 117.71 | mg/L | EPA 200.7 | 0.09 | 2012-10-04 | 17:00:00 | CM |

Lab Supervisor

Domenic Ibanez
Lab Supervisor

SGS North America Inc. | Minerals Services Division
2035 North Airport Road Huntington UT 84528 t (435) 653-2311 f (435)-653-2436 www.sgs.com/minerals

Member of the SGS Group (Société Générale de Surveillance)

*This document is issued by the Company under its General Conditions of Service accessible at http://www.sgs.com/terms_and_conditions.htm. Attention is drawn to the limitation of liability, indemnification and jurisdiction issues defined therein.*

*Any holder of this document is advised that information contained hereon reflects the Company's findings at the time of its intervention only and within the limits of Client's instructions, if any. The Company's sole responsibility is to its Client and this document does not exonerate parties to a transaction from exercising all their rights and obligations under the transaction documents. Any unauthorized alteration, forgery or falsification of the content or appearance of this document is unlawful and offenders may be prosecuted to the fullest extent of the law*

# Analysis Report

November 20, 2012

**PACIFICORP**
FIELD OFFICE
PO BOX 1005
HUNTINGTON UT 84528



ATTN: Invoice Contact

| | | | |
|---|---|---|---|
| Client Sample ID: | Deer Creek Mine | Sample ID By: | PacifiCorp |
| Date Sampled: | Oct 26, 2012 | Sample Taken By: | VBJ |
| Date Received: | Oct 26, 2012 | Time Received: | 1312 |
| Product Description: | WATER | Time Sampled: | 1025 |
| | | Location: | 11th West #1 Seal |
| | | Mine: | 4 |
| | | Field - pH: | 7.57 pH units |
| | | Field - Temperature: | 15.8 DEG. C |

Comments: Dissolved Metals Filtered at Lab

**SGS Minerals Sample ID: 782-1216147-001**

| TESTS | RESULT | UNIT | METHOD | REPORTING LIMIT | ANALYZED DATE | ANALYZED TIME | ANALYST |
|---|---|---|---|---|---|---|---|
| Hardness, mg equivalent CaCO3/L | 300 | mg/L | SM2340-B | 1 | 2012-11-19 | 13:33:05 | DI |
| Acidity | 12 | mg/L | D1067 | 5 | 2012-11-02 | 11:35:00 | AL |
| Anions | 9.99 | meq/L | SM1030E | 0 | 2012-11-19 | 13:33:05 | AL |
| Balance | 0.88 | % | SM1030E | -10 | 2012-11-19 | 13:33:05 | AL |
| Cations | 10.17 | meq/L | SM1030E | 0 | 2012-11-19 | 13:33:05 | AL |
| Alkalinity, mg CaCO3/L (pH 4.5) | 451 | mg/L | SM2320-B | 5 | 2012-10-29 | 09:30:00 | CM |
| Bicarbonate Alkalinity as CaCO3 | 451 | mg/L | SM2320-B | 5 | 2012-10-29 | 09:30:00 | CM |
| Carbonate Alkalinity as CaCO3 | <5 | mg/L | SM2320-B | 5 | 2012-10-29 | 09:30:00 | CM |
| pH | 7.53 | s. u. | SM4500-H | 0.01 | 2012-10-26 | 15:12:00 | CM |
| pH Temperature | 16.60 | °C | SM4500-H | 0.01 | 2012-10-26 | 15:12:00 | CM |
| Conductivity | 902 | µmhos/cm | SM2510 | 0.1 | 2012-10-26 | 15:10:00 | CM |
| Total Dissolved Solids | 535 | mg/L | SM2540-C | 30 | 2012-11-01 | 13:40:00 | CM |
| Chloride, Cl | 8 | mg/L | EPA 300.0 | 1 | 2012-11-01 | 13:49:00 | CM |
| Sulfate, SO4 | 37 | mg/L | EPA 300.0 | 1 | 2012-11-01 | 13:49:00 | CM |
| **METALS BY ICP** | | | | | | | |
| Calcium, Ca - Dissolved | 77.41 | mg/L | EPA 200.7 | 0.03 | 2012-11-06 | 17:25:00 | DI |
| Iron, Fe - Total | 0.57 | mg/L | EPA 200.7 | 0.05 | 2012-11-15 | 15:49:00 | DI |
| Iron, Fe - Dissolved | <0.03 | mg/L | EPA 200.7 | 0.03 | 2012-11-06 | 17:25:00 | DI |
| Magnesium, Mg - Dissolved | 25.95 | mg/L | EPA 200.7 | 0.01 | 2012-11-06 | 17:25:00 | DI |
| Manganese, Mn - Total | 0.071 | mg/L | EPA 200.7 | 0.002 | 2012-11-15 | 15:49:00 | DI |
| Manganese, Mn - Dissolved | 0.056 | mg/L | EPA 200.7 | 0.002 | 2012-11-06 | 17:25:00 | DI |

Lab Supervisor

Domenic Ibanez
Lab Supervisor

SGS North America Inc. | Minerals Services Division
2035 North Airport Road Huntington UT 84528 t (435) 653-2311 f (435)-653-2436 www.sgs.com/minerals

Member of the SGS Group (Société Générale de Surveillance)

*This document is issued by the Company under its General Conditions of Service accessible at http://www.sgs.com/terms_and_conditions.htm. Attention is drawn to the limitation of liability, indemnification and jurisdiction issues defined therein.*

*Any holder of this document is advised that information contained hereon reflects the Company's findings at the time of its intervention only and within the limits of Client's instructions, if any. The Company's sole responsibility is to its Client and this document does not exonerate parties to a transaction from exercising all their rights and obligations under the transaction documents. Any unauthorized alteration, forgery or falsification of the content or appearance of this document is unlawful and offenders may be prosecuted to the fullest extent of the law*

# Analysis Report

November 20, 2012

**PACIFICORP**
FIELD OFFICE
PO BOX 1005
HUNTINGTON UT 84528



ATTN: Invoice Contact

| | | | |
|---|---|---|---|
| Client Sample ID: | Deer Creek Mine | Sample ID By: | PacifiCorp |
| Date Sampled: | Oct 26, 2012 | Sample Taken By: | VBJ |
| Date Received: | Oct 26, 2012 | Time Received: | 1312 |
| Product Description: | WATER | Time Sampled: | 1025 |
| | | Location: | 11th West #1 Seal |
| | | Mine: | 4 |
| | | Field - pH: | 7.57 pH units |
| | | Field - Temperature: | 15.8 DEG. C |

Comments: Dissolved Metals Filtered at Lab

**SGS Minerals Sample ID: 782-1216147-001**

| TESTS | RESULT | UNIT | METHOD | REPORTING LIMIT | ANALYZED DATE | ANALYZED TIME | ANALYST |
|---|---|---|---|---|---|---|---|
| **METALS BY ICP (continued)** | | | | | | | |
| Potassium, K - Dissolved | 10.13 | mg/L | EPA 200.7 | 0.14 | 2012-11-06 | 17:25:00 | DI |
| Sodium, Na - Dissolved | 89.97 | mg/L | EPA 200.7 | 0.09 | 2012-11-06 | 17:25:00 | DI |

Lab Supervisor

Domenic Ibanez
Lab Supervisor

SGS North America Inc. | Minerals Services Division
2035 North Airport Road Huntington UT 84528 t (435) 653-2311 f (435)-653-2436 www.sgs.com/minerals

Member of the SGS Group (Société Générale de Surveillance)

*This document is issued by the Company under its General Conditions of Service accessible at http://www.sgs.com/terms_and_conditions.htm. Attention is drawn to the limitation of liability, indemnification and jurisdiction issues defined therein.*

*Any holder of this document is advised that information contained hereon reflects the Company's findings at the time of its intervention only and within the limits of Client's instructions, if any. The Company's sole responsibility is to its Client and this document does not exonerate parties to a transaction from exercising all their rights and obligations under the transaction documents. Any unauthorized alteration, forgery or falsification of the content or appearance of this document is unlawful and offenders may be prosecuted to the fullest extent of the law*

# Analysis Report

November 20, 2012

**PACIFICORP**
FIELD OFFICE
PO BOX 1005
HUNTINGTON UT 84528



ATTN: Invoice Contact

| | | | |
|---|---|---|---|
| Client Sample ID: | Deer Creek Mine | Sample ID By: | PacifiCorp |
| Date Sampled: | Oct 26, 2012 | Sample Taken By: | VBJ |
| Date Received: | Oct 26, 2012 | Time Received: | 1312 |
| Product Description: | WATER | Time Sampled: | 1055 |
| | | Location: | 17 W #2 Seal |
| | | Mine: | 4 |
| | | Field - pH: | 7.36 pH units |
| | | Field - Temperature: | 13.1 DEG. C |

Comments: Dissolved Metals Filtered at Lab

**SGS Minerals Sample ID: 782-1216147-002**

| TESTS | RESULT | UNIT | METHOD | REPORTING LIMIT | ANALYZED DATE | TIME | ANALYST |
|---|---|---|---|---|---|---|---|
| Hardness, mg equivalent CaCO3/L | 360 | mg/L | SM2340-B | 1 | 2012-11-19 | 13:33:05 | DI |
| Acidity | 13 | mg/L | D1067 | 5 | 2012-11-02 | 11:35:00 | AL |
| Anions | 10.29 | meq/L | SM1030E | 0 | 2012-11-19 | 13:33:05 | AL |
| Balance | 1.06 | % | SM1030E | -10 | 2012-11-19 | 13:33:05 | AL |
| Cations | 10.51 | meq/L | SM1030E | 0 | 2012-11-19 | 13:33:05 | AL |
| Alkalinity, mg CaCO3/L (pH 4.5) | 359 | mg/L | SM2320-B | 5 | 2012-10-29 | 09:30:00 | CM |
| Bicarbonate Alkalinity as CaCO3 | 359 | mg/L | SM2320-B | 5 | 2012-10-29 | 09:30:00 | CM |
| Carbonate Alkalinity as CaCO3 | <5 | mg/L | SM2320-B | 5 | 2012-10-29 | 09:30:00 | CM |
| pH | 7.43 | s. u. | SM4500-H | 0.01 | 2012-10-26 | 15:14:00 | CM |
| pH Temperature | 15.60 | °C | SM4500-H | 0.01 | 2012-10-26 | 15:14:00 | CM |
| Conductivity | 956 | µmhos/cm | SM2510 | 0.1 | 2012-10-26 | 15:10:00 | CM |
| Total Dissolved Solids | 568 | mg/L | SM2540-C | 30 | 2012-11-01 | 13:40:00 | CM |
| Chloride, Cl | 11 | mg/L | EPA 300.0 | 1 | 2012-11-01 | 13:49:00 | CM |
| Sulfate, SO4 | 134 | mg/L | EPA 300.0 | 1 | 2012-11-01 | 13:49:00 | CM |
| **METALS BY ICP** | | | | | | | |
| Calcium, Ca - Dissolved | 70.14 | mg/L | EPA 200.7 | 0.03 | 2012-11-06 | 17:25:00 | DI |
| Iron, Fe - Total | 2.86 | mg/L | EPA 200.7 | 0.05 | 2012-11-15 | 15:49:00 | DI |
| Iron, Fe - Dissolved | <0.03 | mg/L | EPA 200.7 | 0.03 | 2012-11-06 | 17:25:00 | DI |
| Magnesium, Mg - Dissolved | 44.87 | mg/L | EPA 200.7 | 0.01 | 2012-11-06 | 17:25:00 | DI |
| Manganese, Mn - Total | 0.027 | mg/L | EPA 200.7 | 0.002 | 2012-11-15 | 15:49:00 | DI |
| Manganese, Mn - Dissolved | 0.023 | mg/L | EPA 200.7 | 0.002 | 2012-11-06 | 17:25:00 | DI |

Lab Supervisor

Domenic Ibanez
Lab Supervisor

SGS North America Inc. | Minerals Services Division
2035 North Airport Road Huntington UT 84528 t (435) 653-2311 f (435)-653-2436 www.sgs.com/minerals

Member of the SGS Group (Société Générale de Surveillance)

*This document is issued by the Company under its General Conditions of Service accessible at http://www.sgs.com/terms_and_conditions.htm. Attention is drawn to the limitation of liability, indemnification and jurisdiction issues defined therein.*

*Any holder of this document is advised that information contained hereon reflects the Company's findings at the time of its intervention only and within the limits of Client's instructions, if any. The Company's sole responsibility is to its Client and this document does not exonerate parties to a transaction from exercising all their rights and obligations under the transaction documents. Any unauthorized alteration, forgery or falsification of the content or appearance of this document is unlawful and offenders may be prosecuted to the fullest extent of the law*

# Analysis Report

November 20, 2012

**PACIFICORP**
FIELD OFFICE
PO BOX 1005
HUNTINGTON UT 84528



ATTN: Invoice Contact

| | | | |
|---|---|---|---|
| Client Sample ID: | Deer Creek Mine | Sample ID By: | PacifiCorp |
| Date Sampled: | Oct 26, 2012 | Sample Taken By: | VBJ |
| Date Received: | Oct 26, 2012 | Time Received: | 1312 |
| Product Description: | WATER | Time Sampled: | 1055 |
| | | Location: | 17 W #2 Seal |
| | | Mine: | 4 |
| | | Field - pH: | 7.36 pH units |
| | | Field - Temperature: | 13.1 DEG. C |

Comments: Dissolved Metals Filtered at Lab

**SGS Minerals Sample ID: 782-1216147-002**

| TESTS | RESULT | UNIT | METHOD | REPORTING LIMIT | ANALYZED DATE | ANALYZED TIME | ANALYST |
|---|---|---|---|---|---|---|---|
| **METALS BY ICP (continued)** | | | | | | | |
| Potassium, K - Dissolved | 11.51 | mg/L | EPA 200.7 | 0.14 | 2012-11-06 | 17:25:00 | DI |
| Sodium, Na - Dissolved | 69.59 | mg/L | EPA 200.7 | 0.09 | 2012-11-06 | 17:25:00 | DI |

Lab Supervisor

Domenic Ibanez
Lab Supervisor

SGS North America Inc. | Minerals Services Division
2035 North Airport Road Huntington UT 84528 t (435) 653-2311 f (435)-653-2436 www.sgs.com/minerals

Member of the SGS Group (Société Générale de Surveillance)

*This document is issued by the Company under its General Conditions of Service accessible at http://www.sgs.com/terms_and_conditions.htm. Attention is drawn to the limitation of liability, indemnification and jurisdiction issues defined therein.*

*Any holder of this document is advised that information contained hereon reflects the Company's findings at the time of its intervention only and within the limits of Client's instructions, if any. The Company's sole responsibility is to its Client and this document does not exonerate parties to a transaction from exercising all their rights and obligations under the transaction documents. Any unauthorized alteration, forgery or falsification of the content or appearance of this document is unlawful and offenders may be prosecuted to the fullest extent of the law*

# Analysis Report

November 20, 2012

**PACIFICORP**
FIELD OFFICE
PO BOX 1005
HUNTINGTON UT 84528



ATTN: Invoice Contact

| | | | |
|---|---|---|---|
| Client Sample ID: | Deer Creek Mine | Sample ID By: | PacifiCorp |
| Date Sampled: | Oct 26, 2012 | Sample Taken By: | VBJ |
| Date Received: | Oct 26, 2012 | Time Received: | 1312 |
| Product Description: | WATER | Time Sampled: | 1115 |
| | | Location: | 10 IN XC-5 Borehole |
| | | Mine: | 4 |
| | | Field - pH: | 7.51 pH units |
| | | Field - Temperature: | 11.5 DEG. C |

Comments: Dissolved Metals Filtered at Lab

**SGS Minerals Sample ID: 782-1216147-003**

| TESTS | RESULT | UNIT | METHOD | REPORTING LIMIT | ANALYZED DATE | TIME | ANALYST |
|---|---|---|---|---|---|---|---|
| Hardness, mg equivalent CaCO3/L | 350 | mg/L | SM2340-B | 1 | 2012-11-19 | 13:33:05 | DI |
| Acidity | 13 | mg/L | D1067 | 5 | 2012-11-02 | 11:35:00 | AL |
| Anions | 12.22 | meq/L | SM1030E | 0 | 2012-11-19 | 13:33:05 | AL |
| Balance | 1.58 | % | SM1030E | -10 | 2012-11-19 | 13:33:05 | AL |
| Cations | 12.61 | meq/L | SM1030E | 0 | 2012-11-19 | 13:33:05 | AL |
| Alkalinity, mg CaCO3/L (pH 4.5) | 403 | mg/L | SM2320-B | 5 | 2012-10-29 | 09:30:00 | CM |
| Bicarbonate Alkalinity as CaCO3 | 403 | mg/L | SM2320-B | 5 | 2012-10-29 | 09:30:00 | CM |
| Carbonate Alkalinity as CaCO3 | <5 | mg/L | SM2320-B | 5 | 2012-10-29 | 09:30:00 | CM |
| pH | 7.55 | s. u. | SM4500-H | 0.01 | 2012-10-26 | 15:16:00 | CM |
| pH Temperature | 16.70 | °C | SM4500-H | 0.01 | 2012-10-26 | 15:16:00 | CM |
| Conductivity | 1136 | µmhos/cm | SM2510 | 0.1 | 2012-10-26 | 15:10:00 | CM |
| Total Dissolved Solids | 715 | mg/L | SM2540-C | 30 | 2012-11-01 | 13:40:00 | CM |
| Chloride, Cl | 7 | mg/L | EPA 300.0 | 1 | 2012-11-01 | 13:49:00 | CM |
| Sulfate, SO4 | 190 | mg/L | EPA 300.0 | 1 | 2012-11-01 | 13:49:00 | CM |
| **METALS BY ICP** | | | | | | | |
| Calcium, Ca - Dissolved | 68.68 | mg/L | EPA 200.7 | 0.03 | 2012-11-06 | 17:25:00 | DI |
| Iron, Fe - Total | <0.05 | mg/L | EPA 200.7 | 0.05 | 2012-11-15 | 15:49:00 | DI |
| Iron, Fe - Dissolved | <0.03 | mg/L | EPA 200.7 | 0.03 | 2012-11-06 | 17:25:00 | DI |
| Magnesium, Mg - Dissolved | 43.26 | mg/L | EPA 200.7 | 0.01 | 2012-11-06 | 17:25:00 | DI |
| Manganese, Mn - Total | <0.002 | mg/L | EPA 200.7 | 0.002 | 2012-11-15 | 15:49:00 | DI |
| Manganese, Mn - Dissolved | <0.002 | mg/L | EPA 200.7 | 0.002 | 2012-11-06 | 17:25:00 | DI |

Lab Supervisor

Domenic Ibanez
Lab Supervisor

SGS North America Inc. | Minerals Services Division
2035 North Airport Road Huntington UT 84528 t (435) 653-2311 f (435)-653-2436 www.sgs.com/minerals

Member of the SGS Group (Société Générale de Surveillance)

*This document is issued by the Company under its General Conditions of Service accessible at http://www.sgs.com/terms_and_conditions.htm. Attention is drawn to the limitation of liability, indemnification and jurisdiction issues defined therein.*

*Any holder of this document is advised that information contained hereon reflects the Company's findings at the time of its intervention only and within the limits of Client's instructions, if any. The Company's sole responsibility is to its Client and this document does not exonerate parties to a transaction from exercising all their rights and obligations under the transaction documents. Any unauthorized alteration, forgery or falsification of the content or appearance of this document is unlawful and offenders may be prosecuted to the fullest extent of the law*

# Analysis Report

November 20, 2012

**PACIFICORP**
FIELD OFFICE
PO BOX 1005
HUNTINGTON UT 84528



ATTN: Invoice Contact

| | | | |
|---|---|---|---|
| Client Sample ID: | Deer Creek Mine | Sample ID By: | PacifiCorp |
| Date Sampled: | Oct 26, 2012 | Sample Taken By: | VBJ |
| Date Received: | Oct 26, 2012 | Time Received: | 1312 |
| Product Description: | WATER | Time Sampled: | 1115 |
| | | Location: | 10 IN XC-5 Borehole |
| | | Mine: | 4 |
| | | Field - pH: | 7.51 pH units |
| | | Field - Temperature: | 11.5 DEG. C |

Comments: Dissolved Metals Filtered at Lab

**SGS Minerals Sample ID: 782-1216147-003**

| TESTS | RESULT | UNIT | METHOD | REPORTING LIMIT | ANALYZED DATE | ANALYZED TIME | ANALYST |
|---|---|---|---|---|---|---|---|
| **METALS BY ICP (continued)** | | | | | | | |
| Potassium, K - Dissolved | 11.26 | mg/L | EPA 200.7 | 0.14 | 2012-11-06 | 17:25:00 | DI |
| Sodium, Na - Dissolved | 122.73 | mg/L | EPA 200.7 | 0.09 | 2012-11-06 | 17:25:00 | DI |

Lab Supervisor

Domenic Ibanez
Lab Supervisor

SGS North America Inc. | Minerals Services Division
2035 North Airport Road Huntington UT 84528 t (435) 653-2311 f (435)-653-2436 www.sgs.com/minerals

Member of the SGS Group (Société Générale de Surveillance)

*This document is issued by the Company under its General Conditions of Service accessible at http://www.sgs.com/terms_and_conditions.htm. Attention is drawn to the limitation of liability, indemnification and jurisdiction issues defined therein.*

*Any holder of this document is advised that information contained hereon reflects the Company's findings at the time of its intervention only and within the limits of Client's instructions, if any. The Company's sole responsibility is to its Client and this document does not exonerate parties to a transaction from exercising all their rights and obligations under the transaction documents. Any unauthorized alteration, forgery or falsification of the content or appearance of this document is unlawful and offenders may be prosecuted to the fullest extent of the law*

# Analysis Report

December 10, 2012

**PACIFICORP**
FIELD OFFICE
PO BOX 1005
HUNTINGTON UT 84528



ATTN: Invoice Contact

| | | | |
|---|---|---|---|
| Client Sample ID: | Deer Creek Mine | Sample ID By: | PacifiCorp |
| Date Sampled: | Nov 27, 2012 | Sample Taken By: | VBJ |
| Date Received: | Nov 27, 2012 | Time Received: | 1414 |
| Product Description: | WATER | Time Sampled: | 1035 |
| | | Location: | 11th West #2 Seal |
| | | Mine: | 4 |
| | | Field - pH: | 7.45 pH units |
| | | Field - Temperature: | 15.7 DEG. C |

Comments: Dissolved Metals Filtered at Lab

**SGS Minerals Sample ID: 782-1216627-001**

| TESTS | RESULT | UNIT | METHOD | REPORTING LIMIT | ANALYZED DATE | ANALYZED TIME | ANALYST |
|---|---|---|---|---|---|---|---|
| Hardness, mg equivalent CaCO3/L | 321 | mg/L | SM2340-B | 1 | 2012-12-07 | 13:21:29 | AL |
| Anions | 10.26 | meq/L | SM1030E | 0 | 2012-12-07 | 13:21:29 | AL |
| Balance | 1.39 | % | SM1030E | -10 | 2012-12-07 | 13:21:29 | AL |
| Cations | 10.55 | meq/L | SM1030E | 0 | 2012-12-07 | 13:21:29 | AL |
| Acidity | 30 | mg/L | D1067 | 5 | 2012-12-07 | 09:35:00 | AL |
| Alkalinity, mg CaCO3/L (pH 4.5) | 463 | mg/L | SM2320-B | 5 | 2012-12-05 | 10:05:00 | AL |
| Bicarbonate Alkalinity as CaCO3 | 463 | mg/L | SM2320-B | 5 | 2012-12-05 | 10:05:00 | AL |
| Carbonate Alkalinity as CaCO3 | <5 | mg/L | SM2320-B | 5 | 2012-12-05 | 10:05:00 | AL |
| pH | 7.20 | s. u. | SM4500-H | 0.01 | 2012-11-28 | 06:56:00 | AL |
| pH Temperature | 18.50 | °C | SM4500-H | 0.01 | 2012-11-28 | 06:56:00 | AL |
| Conductivity | 927 | µmhos/cm | SM2510 | 0.1 | 2012-11-28 | 07:10:00 | AL |
| Total Dissolved Solids | 533 | mg/L | SM2540-C | 30 | 2012-12-03 | 13:50:00 | AL |
| Chloride, Cl | 8 | mg/L | EPA 300.0 | 1 | 2012-11-30 | 00:13:00 | AL |
| Sulfate, SO4 | 38 | mg/L | EPA 300.0 | 1 | 2012-11-30 | 00:13:00 | AL |
| **METALS BY ICP** | | | | | | | |
| Calcium, Ca - Dissolved | 82.04 | mg/L | EPA 200.7 | 0.03 | 2012-11-28 | 12:54:00 | AL |
| Iron, Fe - Total | 1.04 | mg/L | EPA 200.7 | 0.05 | 2012-12-04 | 13:56:00 | AL |
| Iron, Fe - Dissolved | <0.03 | mg/L | EPA 200.7 | 0.03 | 2012-11-28 | 12:54:00 | AL |
| Magnesium, Mg - Dissolved | 28.15 | mg/L | EPA 200.7 | 0.01 | 2012-11-28 | 12:54:00 | AL |
| Manganese, Mn - Total | 0.090 | mg/L | EPA 200.7 | 0.002 | 2012-12-04 | 13:56:00 | AL |
| Manganese, Mn - Dissolved | 0.090 | mg/L | EPA 200.7 | 0.002 | 2012-11-28 | 12:54:00 | AL |

Lab Supervisor

Domenic Ibanez
Lab Supervisor

SGS North America Inc. | Minerals Services Division
2035 North Airport Road Huntington UT 84528 t (435) 653-2311 f (435)-653-2436 www.sgs.com/minerals

Member of the SGS Group (Société Générale de Surveillance)

*This document is issued by the Company under its General Conditions of Service accessible at http://www.sgs.com/terms_and_conditions.htm. Attention is drawn to the limitation of liability, indemnification and jurisdiction issues defined therein.*

*Any holder of this document is advised that information contained hereon reflects the Company's findings at the time of its intervention only and within the limits of Client's instructions, if any. The Company's sole responsibility is to its Client and this document does not exonerate parties to a transaction from exercising all their rights and obligations under the transaction documents. Any unauthorized alteration, forgery or falsification of the content or appearance of this document is unlawful and offenders may be prosecuted to the fullest extent of the law*

# Analysis Report

December 10, 2012

**PACIFICORP**
FIELD OFFICE
PO BOX 1005
HUNTINGTON UT 84528



ATTN: Invoice Contact

| | | | |
|---|---|---|---|
| Client Sample ID: | Deer Creek Mine | Sample ID By: | PacifiCorp |
| Date Sampled: | Nov 27, 2012 | Sample Taken By: | VBJ |
| Date Received: | Nov 27, 2012 | Time Received: | 1414 |
| Product Description: | WATER | Time Sampled: | 1035 |
| | | Location: | 11th West #2 Seal |
| | | Mine: | 4 |
| | | Field - pH: | 7.45 pH units |
| | | Field - Temperature: | 15.7 DEG. C |

Comments: Dissolved Metals Filtered at Lab

**SGS Minerals Sample ID: 782-1216627-001**

| TESTS | RESULT | UNIT | METHOD | REPORTING LIMIT | ANALYZED DATE | ANALYZED TIME | ANALYST |
|---|---|---|---|---|---|---|---|
| **METALS BY ICP (continued)** | | | | | | | |
| Potassium, K - Dissolved | 10.37 | mg/L | EPA 200.7 | 0.14 | 2012-11-28 | 12:54:00 | AL |
| Sodium, Na - Dissolved | 89.16 | mg/L | EPA 200.7 | 0.09 | 2012-11-28 | 12:54:00 | AL |

Lab Supervisor

Domenic Ibanez
Lab Supervisor

SGS North America Inc. | Minerals Services Division
2035 North Airport Road Huntington UT 84528 t (435) 653-2311 f (435)-653-2436 www.sgs.com/minerals

Member of the SGS Group (Société Générale de Surveillance)

*This document is issued by the Company under its General Conditions of Service accessible at http://www.sgs.com/terms_and_conditions.htm. Attention is drawn to the limitation of liability, indemnification and jurisdiction issues defined therein.*

*Any holder of this document is advised that information contained hereon reflects the Company's findings at the time of its intervention only and within the limits of Client's instructions, if any. The Company's sole responsibility is to its Client and this document does not exonerate parties to a transaction from exercising all their rights and obligations under the transaction documents. Any unauthorized alteration, forgery or falsification of the content or appearance of this document is unlawful and offenders may be prosecuted to the fullest extent of the law*

# Analysis Report

December 10, 2012

**PACIFICORP**
FIELD OFFICE
PO BOX 1005
HUNTINGTON UT 84528



ATTN: Invoice Contact

| | | | |
|---|---|---|---|
| Client Sample ID: | Deer Creek Mine | Sample ID By: | PacifiCorp |
| Date Sampled: | Nov 27, 2012 | Sample Taken By: | VBJ |
| Date Received: | Nov 27, 2012 | Time Received: | 1414 |
| Product Description: | WATER | Time Sampled: | 1105 |
| | | Location: | 17th West #2 Seal |
| | | Mine: | 4 |
| | | Field - pH: | 7.82 pH units |
| | | Field - Temperature: | 12.8 DEG. C |

Comments: Dissolved Metals Filtered at Lab

**SGS Minerals Sample ID: 782-1216627-002**

| TESTS | RESULT | UNIT | METHOD | REPORTING LIMIT | ANALYZED DATE | ANALYZED TIME | ANALYST |
|---|---|---|---|---|---|---|---|
| Hardness, mg equivalent CaCO3/L | 368 | mg/L | SM2340-B | 1 | 2012-12-07 | 13:21:29 | AL |
| Anions | 10.76 | meq/L | SM1030E | 0 | 2012-12-07 | 13:21:29 | AL |
| Balance | -0.76 | % | SM1030E | -10 | 2012-12-07 | 13:21:29 | AL |
| Cations | 10.60 | meq/L | SM1030E | 0 | 2012-12-07 | 13:21:29 | AL |
| Acidity | 30 | mg/L | D1067 | 5 | 2012-12-07 | 09:35:00 | AL |
| Alkalinity, mg CaCO3/L (pH 4.5) | 373 | mg/L | SM2320-B | 5 | 2012-12-05 | 10:05:00 | AL |
| Bicarbonate Alkalinity as CaCO3 | 373 | mg/L | SM2320-B | 5 | 2012-12-05 | 10:05:00 | AL |
| Carbonate Alkalinity as CaCO3 | <5 | mg/L | SM2320-B | 5 | 2012-12-05 | 10:05:00 | AL |
| pH | 7.26 | s. u. | SM4500-H | 0.01 | 2012-11-28 | 06:58:00 | AL |
| pH Temperature | 18.40 | °C | SM4500-H | 0.01 | 2012-11-28 | 06:58:00 | AL |
| Conductivity | 953 | µmhos/cm | SM2510 | 0.1 | 2012-11-28 | 07:10:00 | AL |
| Total Dissolved Solids | 583 | mg/L | SM2540-C | 30 | 2012-12-03 | 13:50:00 | AL |
| Chloride, Cl | 12 | mg/L | EPA 300.0 | 1 | 2012-11-30 | 00:13:00 | AL |
| Sulfate, SO4 | 142 | mg/L | EPA 300.0 | 1 | 2012-11-30 | 00:13:00 | AL |
| **METALS BY ICP** | | | | | | | |
| Calcium, Ca - Dissolved | 70.35 | mg/L | EPA 200.7 | 0.03 | 2012-11-28 | 12:54:00 | AL |
| Iron, Fe - Total | 3.08 | mg/L | EPA 200.7 | 0.05 | 2012-12-04 | 13:56:00 | AL |
| Iron, Fe - Dissolved | 0.09 | mg/L | EPA 200.7 | 0.03 | 2012-11-28 | 12:54:00 | AL |
| Magnesium, Mg - Dissolved | 46.63 | mg/L | EPA 200.7 | 0.01 | 2012-11-28 | 12:54:00 | AL |
| Manganese, Mn - Total | 0.026 | mg/L | EPA 200.7 | 0.002 | 2012-12-04 | 13:56:00 | AL |
| Manganese, Mn - Dissolved | 0.026 | mg/L | EPA 200.7 | 0.002 | 2012-11-28 | 12:54:00 | AL |

Lab Supervisor

Domenic Ibanez
Lab Supervisor

SGS North America Inc. | Minerals Services Division
2035 North Airport Road Huntington UT 84528 t (435) 653-2311 f (435)-653-2436 www.sgs.com/minerals

Member of the SGS Group (Société Générale de Surveillance)

*This document is issued by the Company under its General Conditions of Service accessible at http://www.sgs.com/terms_and_conditions.htm. Attention is drawn to the limitation of liability, indemnification and jurisdiction issues defined therein.*

*Any holder of this document is advised that information contained hereon reflects the Company's findings at the time of its intervention only and within the limits of Client's instructions, if any. The Company's sole responsibility is to its Client and this document does not exonerate parties to a transaction from exercising all their rights and obligations under the transaction documents. Any unauthorized alteration, forgery or falsification of the content or appearance of this document is unlawful and offenders may be prosecuted to the fullest extent of the law*

# Analysis Report

December 10, 2012

**PACIFICORP**
FIELD OFFICE
PO BOX 1005
HUNTINGTON UT 84528



ATTN: Invoice Contact

| | | | |
|---|---|---|---|
| Client Sample ID: | Deer Creek Mine | Sample ID By: | PacifiCorp |
| Date Sampled: | Nov 27, 2012 | Sample Taken By: | VBJ |
| Date Received: | Nov 27, 2012 | Time Received: | 1414 |
| Product Description: | WATER | Time Sampled: | 1105 |
| | | Location: | 17th West #2 Seal |
| | | Mine: | 4 |
| | | Field - pH: | 7.82 pH units |
| | | Field - Temperature: | 12.8 DEG. C |

Comments: Dissolved Metals Filtered at Lab

**SGS Minerals Sample ID: 782-1216627-002**

| TESTS | RESULT | UNIT | METHOD | REPORTING LIMIT | ANALYZED DATE | ANALYZED TIME | ANALYST |
|---|---|---|---|---|---|---|---|
| **METALS BY ICP (continued)** | | | | | | | |
| Potassium, K - Dissolved | 11.48 | mg/L | EPA 200.7 | 0.14 | 2012-11-28 | 12:54:00 | AL |
| Sodium, Na - Dissolved | 68.08 | mg/L | EPA 200.7 | 0.09 | 2012-11-28 | 12:54:00 | AL |

Lab Supervisor

Domenic Ibanez
Lab Supervisor

SGS North America Inc. | Minerals Services Division
2035 North Airport Road Huntington UT 84528 t (435) 653-2311 f (435)-653-2436 www.sgs.com/minerals

Member of the SGS Group (Société Générale de Surveillance)

*This document is issued by the Company under its General Conditions of Service accessible at http://www.sgs.com/terms_and_conditions.htm. Attention is drawn to the limitation of liability, indemnification and jurisdiction issues defined therein.*

*Any holder of this document is advised that information contained hereon reflects the Company's findings at the time of its intervention only and within the limits of Client's instructions, if any. The Company's sole responsibility is to its Client and this document does not exonerate parties to a transaction from exercising all their rights and obligations under the transaction documents. Any unauthorized alteration, forgery or falsification of the content or appearance of this document is unlawful and offenders may be prosecuted to the fullest extent of the law*

# Analysis Report

December 10, 2012

**PACIFICORP**
FIELD OFFICE
PO BOX 1005
HUNTINGTON UT 84528



ATTN: Invoice Contact

| | | | |
|---|---|---|---|
| Client Sample ID: | Deer Creek Mine | Sample ID By: | PacifiCorp |
| Date Sampled: | Nov 27, 2012 | Sample Taken By: | VBJ |
| Date Received: | Nov 27, 2012 | Time Received: | 1414 |
| Product Description: | WATER | Time Sampled: | 1130 |
| | | Location: | 10 North XC-5 Borehole |
| | | Mine: | 4 |
| | | Field - pH: | 7.93 pH units |
| | | Field - Temperature: | 11.9 DEG. C |

Comments: Dissolved Metals Filtered at Lab

**SGS Minerals Sample ID: 782-1216627-003**

| TESTS | RESULT | UNIT | METHOD | REPORTING LIMIT | ANALYZED DATE | ANALYZED TIME | ANALYST |
|---|---|---|---|---|---|---|---|
| Hardness, mg equivalent CaCO3/L | 358 | mg/L | SM2340-B | 1 | 2012-12-07 | 13:21:29 | AL |
| Anions | 12.59 | meq/L | SM1030E | 0 | 2012-12-07 | 13:21:29 | AL |
| Balance | 0.21 | % | SM1030E | -10 | 2012-12-07 | 13:21:29 | AL |
| Cations | 12.65 | meq/L | SM1030E | 0 | 2012-12-07 | 13:21:29 | AL |
| Acidity | 20 | mg/L | D1067 | 5 | 2012-12-07 | 09:35:00 | AL |
| Alkalinity, mg CaCO3/L (pH 4.5) | 415 | mg/L | SM2320-B | 5 | 2012-12-05 | 10:05:00 | AL |
| Bicarbonate Alkalinity as CaCO3 | 415 | mg/L | SM2320-B | 5 | 2012-12-05 | 10:05:00 | AL |
| Carbonate Alkalinity as CaCO3 | <5 | mg/L | SM2320-B | 5 | 2012-12-05 | 10:05:00 | AL |
| pH | 7.47 | s. u. | SM4500-H | 0.01 | 2012-11-28 | 07:00:00 | AL |
| pH Temperature | 17.90 | °C | SM4500-H | 0.01 | 2012-11-28 | 07:00:00 | AL |
| Conductivity | 1128 | µmhos/cm | SM2510 | 0.1 | 2012-11-28 | 07:10:00 | AL |
| Total Dissolved Solids | 692 | mg/L | SM2540-C | 30 | 2012-12-03 | 13:50:00 | AL |
| Chloride, Cl | 7 | mg/L | EPA 300.0 | 1 | 2012-11-30 | 00:13:00 | AL |
| Sulfate, SO4 | 197 | mg/L | EPA 300.0 | 1 | 2012-11-30 | 00:13:00 | AL |
| **METALS BY ICP** | | | | | | | |
| Calcium, Ca - Dissolved | 68.88 | mg/L | EPA 200.7 | 0.03 | 2012-11-28 | 12:54:00 | AL |
| Iron, Fe - Total | <0.05 | mg/L | EPA 200.7 | 0.05 | 2012-12-04 | 13:56:00 | AL |
| Iron, Fe - Dissolved | <0.03 | mg/L | EPA 200.7 | 0.03 | 2012-11-28 | 12:54:00 | AL |
| Magnesium, Mg - Dissolved | 45.25 | mg/L | EPA 200.7 | 0.01 | 2012-11-28 | 12:54:00 | AL |
| Manganese, Mn - Total | <0.002 | mg/L | EPA 200.7 | 0.002 | 2012-12-04 | 13:56:00 | AL |
| Manganese, Mn - Dissolved | <0.002 | mg/L | EPA 200.7 | 0.002 | 2012-11-28 | 12:54:00 | AL |

Lab Supervisor

Domenic Ibanez
Lab Supervisor

SGS North America Inc. | Minerals Services Division
2035 North Airport Road Huntington UT 84528 t (435) 653-2311 f (435)-653-2436 www.sgs.com/minerals

Member of the SGS Group (Société Générale de Surveillance)

*This document is issued by the Company under its General Conditions of Service accessible at http://www.sgs.com/terms_and_conditions.htm. Attention is drawn to the limitation of liability, indemnification and jurisdiction issues defined therein.*

*Any holder of this document is advised that information contained hereon reflects the Company's findings at the time of its intervention only and within the limits of Client's instructions, if any. The Company's sole responsibility is to its Client and this document does not exonerate parties to a transaction from exercising all their rights and obligations under the transaction documents. Any unauthorized alteration, forgery or falsification of the content or appearance of this document is unlawful and offenders may be prosecuted to the fullest extent of the law*

# Analysis Report

December 10, 2012

**PACIFICORP**
FIELD OFFICE
PO BOX 1005
HUNTINGTON UT 84528



ATTN: Invoice Contact

| | | | |
|---|---|---|---|
| Client Sample ID: | Deer Creek Mine | Sample ID By: | PacifiCorp |
| Date Sampled: | Nov 27, 2012 | Sample Taken By: | VBJ |
| Date Received: | Nov 27, 2012 | Time Received: | 1414 |
| Product Description: | WATER | Time Sampled: | 1130 |
| | | Location: | 10 North XC-5 Borehole |
| | | Mine: | 4 |
| | | Field - pH: | 7.93 pH units |
| | | Field - Temperature: | 11.9 DEG. C |

Comments: Dissolved Metals Filtered at Lab

**SGS Minerals Sample ID: 782-1216627-003**

| TESTS | RESULT | UNIT | METHOD | REPORTING LIMIT | ANALYZED DATE | ANALYZED TIME | ANALYST |
|---|---|---|---|---|---|---|---|
| **METALS BY ICP (continued)** | | | | | | | |
| Potassium, K - Dissolved | 10.71 | mg/L | EPA 200.7 | 0.14 | 2012-11-28 | 12:54:00 | AL |
| Sodium, Na - Dissolved | 119.81 | mg/L | EPA 200.7 | 0.09 | 2012-11-28 | 12:54:00 | AL |

Lab Supervisor

Domenic Ibanez
Lab Supervisor

SGS North America Inc. | Minerals Services Division
2035 North Airport Road Huntington UT 84528 t (435) 653-2311 f (435)-653-2436 www.sgs.com/minerals

Member of the SGS Group (Société Générale de Surveillance)

*This document is issued by the Company under its General Conditions of Service accessible at http://www.sgs.com/terms_and_conditions.htm. Attention is drawn to the limitation of liability, indemnification and jurisdiction issues defined therein.*

*Any holder of this document is advised that information contained hereon reflects the Company's findings at the time of its intervention only and within the limits of Client's instructions, if any. The Company's sole responsibility is to its Client and this document does not exonerate parties to a transaction from exercising all their rights and obligations under the transaction documents. Any unauthorized alteration, forgery or falsification of the content or appearance of this document is unlawful and offenders may be prosecuted to the fullest extent of the law*

# Analysis Report

January 16, 2013

**PACIFICORP**
FIELD OFFICE
PO BOX 1005
HUNTINGTON UT 84528



ATTN: Invoice Contact

| | | | |
|---|---|---|---|
| Client Sample ID: | Deer Creek Mine | Sample ID By: | PacifiCorp |
| Date Sampled: | Dec 17, 2012 | Sample Taken By: | VBJ |
| Date Received: | Dec 17, 2012 | Time Received: | 1454 |
| Product Description: | WATER | Time Sampled: | 1110 |
| | | Location: | 11th West #2 Seal |
| | | Mine: | 4 |
| | | Field - pH: | 6.98 pH units |
| | | Field - Temperature: | 15.5 DEG. C |

Comments: Dissolved Metals Filtered at Lab

**SGS Minerals Sample ID: 782-1216963-003**

| TESTS | RESULT | UNIT | METHOD | REPORTING LIMIT | ANALYZED DATE | ANALYZED TIME | ANALYST |
|---|---|---|---|---|---|---|---|
| Hardness, mg equivalent CaCO3/L | 304 | mg/L | SM2340-B | 1 | 2012-12-28 | 11:18:41 | AL |
| Anions | 10.00 | meq/L | SM1030E | 0 | 2012-12-28 | 11:18:41 | AL |
| Balance | 2.03 | % | SM1030E | -10 | 2012-12-28 | 11:18:41 | AL |
| Cations | 10.41 | meq/L | SM1030E | 0 | 2012-12-28 | 11:18:41 | AL |
| Acidity | 22 | mg/L | D1067 | 5 | 2012-12-18 | 14:35:00 | DI |
| Alkalinity, mg CaCO3/L (pH 4.5) | 448 | mg/L | SM2320-B | 5 | 2012-12-18 | 15:29:00 | DI |
| Bicarbonate Alkalinity as CaCO3 | 448 | mg/L | SM2320-B | 5 | 2012-12-18 | 15:29:00 | DI |
| Carbonate Alkalinity as CaCO3 | <5 | mg/L | SM2320-B | 5 | 2012-12-18 | 15:29:00 | DI |
| pH | 7.12 | s. u. | SM4500-H | 0.01 | 2012-12-18 | 07:59:00 | CM |
| pH Temperature | 20.30 | °C | SM4500-H | 0.01 | 2012-12-18 | 07:59:00 | CM |
| Conductivity | 930 | µmhos/cm | SM2510 | 0.1 | 2012-12-18 | 08:00:00 | CM |
| Total Dissolved Solids | 504 | mg/L | SM2540-C | 30 | 2012-12-18 | 11:00:00 | CM |
| Chloride, Cl | 8 | mg/L | EPA 300.0 | 1 | 2012-12-21 | 21:18:00 | AL |
| Sulfate, SO4 | 39 | mg/L | EPA 300.0 | 1 | 2012-12-21 | 21:18:00 | AL |
| **METALS BY ICP** | | | | | | | |
| Calcium, Ca - Dissolved | 77.70 | mg/L | EPA 200.7 | 0.03 | 2012-12-21 | 17:11:00 | CM |
| Iron, Fe - Total | 3.96 | mg/L | EPA 200.7 | 0.05 | 2012-12-27 | 16:08:00 | CM |
| Iron, Fe - Dissolved | 0.11 | mg/L | EPA 200.7 | 0.03 | 2012-12-21 | 17:11:00 | CM |
| Magnesium, Mg - Dissolved | 26.64 | mg/L | EPA 200.7 | 0.01 | 2012-12-21 | 17:11:00 | CM |
| Manganese, Mn - Total | 0.094 | mg/L | EPA 200.7 | 0.002 | 2012-12-27 | 16:08:00 | CM |
| Manganese, Mn - Dissolved | 0.094 | mg/L | EPA 200.7 | 0.002 | 2012-12-21 | 17:11:00 | CM |

Lab Supervisor

Domenic Ibanez
Lab Supervisor

SGS North America Inc. | Minerals Services Division
2035 North Airport Road Huntington UT 84528 t (435) 653-2311 f (435)-653-2436 www.sgs.com/minerals

Member of the SGS Group (Société Générale de Surveillance)

*This document is issued by the Company under its General Conditions of Service accessible at http://www.sgs.com/terms_and_conditions.htm. Attention is drawn to the limitation of liability, indemnification and jurisdiction issues defined therein.*

*Any holder of this document is advised that information contained hereon reflects the Company's findings at the time of its intervention only and within the limits of Client's instructions, if any. The Company's sole responsibility is to its Client and this document does not exonerate parties to a transaction from exercising all their rights and obligations under the transaction documents. Any unauthorized alteration, forgery or falsification of the content or appearance of this document is unlawful and offenders may be prosecuted to the fullest extent of the law*

SGS

# Analysis Report

January 16, 2013

**PACIFICORP**
FIELD OFFICE
PO BOX 1005
HUNTINGTON UT 84528



ATTN: Invoice Contact

| | | | |
|---|---|---|---|
| Client Sample ID: | Deer Creek Mine | Sample ID By: | PacifiCorp |
| Date Sampled: | Dec 17, 2012 | Sample Taken By: | VBJ |
| Date Received: | Dec 17, 2012 | Time Received: | 1454 |
| Product Description: | WATER | Time Sampled: | 1110 |
| | | Location: | 11th West #2 Seal |
| | | Mine: | 4 |
| | | Field - pH: | 6.98 pH units |
| | | Field - Temperature: | 15.5 DEG. C |

Comments: Dissolved Metals Filtered at Lab

**SGS Minerals Sample ID: 782-1216963-003**

| TESTS | RESULT | UNIT | METHOD | REPORTING LIMIT | ANALYZED DATE | ANALYZED TIME | ANALYST |
|---|---|---|---|---|---|---|---|
| **METALS BY ICP (continued)** | | | | | | | |
| Potassium, K - Dissolved | 10.95 | mg/L | EPA 200.7 | 0.14 | 2012-12-21 | 17:11:00 | CM |
| Sodium, Na - Dissolved | 93.40 | mg/L | EPA 200.7 | 0.09 | 2012-12-21 | 17:11:00 | CM |

Lab Supervisor

Domenic Ibanez
Lab Supervisor

SGS North America Inc. | Minerals Services Division
2035 North Airport Road Huntington UT 84528 t (435) 653-2311 f (435)-653-2436 www.sgs.com/minerals

Member of the SGS Group (Société Générale de Surveillance)

*This document is issued by the Company under its General Conditions of Service accessible at http://www.sgs.com/terms_and_conditions.htm. Attention is drawn to the limitation of liability, indemnification and jurisdiction issues defined therein.*

*Any holder of this document is advised that information contained hereon reflects the Company's findings at the time of its intervention only and within the limits of Client's instructions, if any. The Company's sole responsibility is to its Client and this document does not exonerate parties to a transaction from exercising all their rights and obligations under the transaction documents. Any unauthorized alteration, forgery or falsification of the content or appearance of this document is unlawful and offenders may be prosecuted to the fullest extent of the law*

# Analysis Report

January 16, 2013

**PACIFICORP**
FIELD OFFICE
PO BOX 1005
HUNTINGTON UT 84528



ATTN: Invoice Contact

| | | | |
|---|---|---|---|
| Client Sample ID: | Deer Creek Mine | Sample ID By: | PacifiCorp |
| Date Sampled: | Dec 17, 2012 | Sample Taken By: | VBJ |
| Date Received: | Dec 17, 2012 | Time Received: | 1454 |
| Product Description: | WATER | Time Sampled: | 1139 |
| | | Location: | 17 West #2 Seal |
| | | Mine: | 4 |
| | | Field - pH: | 7.27 pH units |
| | | Field - Temperature: | 12.7 DEG. C |

Comments: Dissolved Metals Filtered at Lab

**SGS Minerals Sample ID: 782-1216963-004**

| TESTS | RESULT | UNIT | METHOD | REPORTING LIMIT | ANALYZED DATE | ANALYZED TIME | ANALYST |
|---|---|---|---|---|---|---|---|
| Hardness, mg equivalent CaCO3/L | 367 | mg/L | SM2340-B | 1 | 2012-12-28 | 11:18:41 | AL |
| Anions | 10.53 | meq/L | SM1030E | 0 | 2012-12-28 | 11:18:41 | AL |
| Balance | -0.46 | % | SM1030E | -10 | 2012-12-28 | 11:18:41 | AL |
| Cations | 10.44 | meq/L | SM1030E | 0 | 2012-12-28 | 11:18:41 | AL |
| Acidity | 61 | mg/L | D1067 | 5 | 2012-12-18 | 14:35:00 | DI |
| Alkalinity, mg CaCO3/L (pH 4.5) | 367 | mg/L | SM2320-B | 5 | 2012-12-18 | 15:29:00 | DI |
| Bicarbonate Alkalinity as CaCO3 | 367 | mg/L | SM2320-B | 5 | 2012-12-18 | 15:29:00 | DI |
| Carbonate Alkalinity as CaCO3 | <5 | mg/L | SM2320-B | 5 | 2012-12-18 | 15:29:00 | DI |
| pH | 7.36 | s. u. | SM4500-H | 0.01 | 2012-12-18 | 08:01:00 | CM |
| pH Temperature | 20.30 | °C | SM4500-H | 0.01 | 2012-12-18 | 08:01:00 | CM |
| Conductivity | 962 | µmhos/cm | SM2510 | 0.1 | 2012-12-18 | 08:00:00 | CM |
| Total Dissolved Solids | 548 | mg/L | SM2540-C | 30 | 2012-12-18 | 11:00:00 | CM |
| Chloride, Cl | 12 | mg/L | EPA 300.0 | 1 | 2012-12-21 | 21:18:00 | AL |
| Sulfate, SO4 | 138 | mg/L | EPA 300.0 | 1 | 2012-12-21 | 21:18:00 | AL |
| **METALS BY ICP** | | | | | | | |
| Calcium, Ca - Dissolved | 69.70 | mg/L | EPA 200.7 | 0.03 | 2012-12-21 | 17:11:00 | CM |
| Iron, Fe - Total | 3.95 | mg/L | EPA 200.7 | 0.05 | 2012-12-27 | 16:08:00 | CM |
| Iron, Fe - Dissolved | <0.03 | mg/L | EPA 200.7 | 0.03 | 2012-12-21 | 17:11:00 | CM |
| Magnesium, Mg - Dissolved | 46.74 | mg/L | EPA 200.7 | 0.01 | 2012-12-21 | 17:11:00 | CM |
| Manganese, Mn - Total | 0.026 | mg/L | EPA 200.7 | 0.002 | 2012-12-27 | 16:08:00 | CM |
| Manganese, Mn - Dissolved | 0.026 | mg/L | EPA 200.7 | 0.002 | 2012-12-21 | 17:11:00 | CM |

Lab Supervisor

Domenic Ibanez
Lab Supervisor

SGS North America Inc. | Minerals Services Division
2035 North Airport Road Huntington UT 84528 t (435) 653-2311 f (435)-653-2436 www.sgs.com/minerals

Member of the SGS Group (Société Générale de Surveillance)

*This document is issued by the Company under its General Conditions of Service accessible at http://www.sgs.com/terms_and_conditions.htm. Attention is drawn to the limitation of liability, indemnification and jurisdiction issues defined therein.*

*Any holder of this document is advised that information contained hereon reflects the Company's findings at the time of its intervention only and within the limits of Client's instructions, if any. The Company's sole responsibility is to its Client and this document does not exonerate parties to a transaction from exercising all their rights and obligations under the transaction documents. Any unauthorized alteration, forgery or falsification of the content or appearance of this document is unlawful and offenders may be prosecuted to the fullest extent of the law*

# Analysis Report

January 16, 2013

**PACIFICORP**
FIELD OFFICE
PO BOX 1005
HUNTINGTON UT 84528



ATTN: Invoice Contact

| | | | |
|---|---|---|---|
| Client Sample ID: | Deer Creek Mine | Sample ID By: | PacifiCorp |
| Date Sampled: | Dec 17, 2012 | Sample Taken By: | VBJ |
| Date Received: | Dec 17, 2012 | Time Received: | 1454 |
| Product Description: | WATER | Time Sampled: | 1139 |
| | | Location: | 17 West #2 Seal |
| | | Mine: | 4 |
| | | Field - pH: | 7.27 pH units |
| | | Field - Temperature: | 12.7 DEG. C |

Comments: Dissolved Metals Filtered at Lab

**SGS Minerals Sample ID: 782-1216963-004**

| TESTS | RESULT | UNIT | METHOD | REPORTING LIMIT | ANALYZED DATE | ANALYZED TIME | ANALYST |
|---|---|---|---|---|---|---|---|
| **METALS BY ICP (continued)** | | | | | | | |
| Potassium, K - Dissolved | 11.08 | mg/L | EPA 200.7 | 0.14 | 2012-12-21 | 17:11:00 | CM |
| Sodium, Na - Dissolved | 65.02 | mg/L | EPA 200.7 | 0.09 | 2012-12-21 | 17:11:00 | CM |

Lab Supervisor

Domenic Ibanez
Lab Supervisor

SGS North America Inc. | Minerals Services Division
2035 North Airport Road Huntington UT 84528 t (435) 653-2311 f (435)-653-2436 www.sgs.com/minerals

Member of the SGS Group (Société Générale de Surveillance)

*This document is issued by the Company under its General Conditions of Service accessible at http://www.sgs.com/terms_and_conditions.htm. Attention is drawn to the limitation of liability, indemnification and jurisdiction issues defined therein.*

*Any holder of this document is advised that information contained hereon reflects the Company's findings at the time of its intervention only and within the limits of Client's instructions, if any. The Company's sole responsibility is to its Client and this document does not exonerate parties to a transaction from exercising all their rights and obligations under the transaction documents. Any unauthorized alteration, forgery or falsification of the content or appearance of this document is unlawful and offenders may be prosecuted to the fullest extent of the law*

# Analysis Report

January 16, 2013

**PACIFICORP**
FIELD OFFICE
PO BOX 1005
HUNTINGTON UT 84528



ATTN: Invoice Contact

| | | | |
|---|---|---|---|
| Client Sample ID: | Deer Creek Mine | Sample ID By: | PacifiCorp |
| Date Sampled: | Dec 17, 2012 | Sample Taken By: | VBJ |
| Date Received: | Dec 17, 2012 | Time Received: | 1454 |
| Product Description: | WATER | Time Sampled: | 1200 |
| | | Location: | 10 North XC-5 Borehole |
| | | Mine: | 4 |
| | | Field - pH: | 7.4 pH units |
| | | Field - Temperature: | 11.9 DEG. C |

Comments: Dissolved Metals Filtered at Lab

**SGS Minerals Sample ID: 782-1216963-005**

| TESTS | RESULT | UNIT | METHOD | REPORTING LIMIT | ANALYZED DATE | ANALYZED TIME | ANALYST |
|---|---|---|---|---|---|---|---|
| Hardness, mg equivalent CaCO3/L | 359 | mg/L | SM2340-B | 1 | 2012-12-28 | 11:18:41 | AL |
| Anions | 12.82 | meq/L | SM1030E | 0 | 2012-12-28 | 11:18:41 | AL |
| Balance | -0.46 | % | SM1030E | -10 | 2012-12-28 | 11:18:41 | AL |
| Cations | 12.71 | meq/L | SM1030E | 0 | 2012-12-28 | 11:18:41 | AL |
| Acidity | 30 | mg/L | D1067 | 5 | 2012-12-18 | 14:35:00 | DI |
| Alkalinity, mg CaCO3/L (pH 4.5) | 422 | mg/L | SM2320-B | 5 | 2012-12-18 | 15:29:00 | DI |
| Bicarbonate Alkalinity as CaCO3 | 422 | mg/L | SM2320-B | 5 | 2012-12-18 | 15:29:00 | DI |
| Carbonate Alkalinity as CaCO3 | <5 | mg/L | SM2320-B | 5 | 2012-12-18 | 15:29:00 | DI |
| pH | 7.51 | s. u. | SM4500-H | 0.01 | 2012-12-18 | 08:03:00 | CM |
| pH Temperature | 20.30 | °C | SM4500-H | 0.01 | 2012-12-18 | 08:03:00 | CM |
| Conductivity | 1170 | µmhos/cm | SM2510 | 0.1 | 2012-12-18 | 08:00:00 | CM |
| Total Dissolved Solids | 704 | mg/L | SM2540-C | 30 | 2012-12-18 | 11:00:00 | CM |
| Chloride, Cl | 7 | mg/L | EPA 300.0 | 1 | 2012-12-19 | 21:05:00 | AL |
| Sulfate, SO4 | 202 | mg/L | EPA 300.0 | 1 | 2012-12-19 | 21:05:00 | AL |
| **METALS BY ICP** | | | | | | | |
| Calcium, Ca - Dissolved | 68.71 | mg/L | EPA 200.7 | 0.03 | 2012-12-21 | 17:11:00 | CM |
| Iron, Fe - Total | <0.05 | mg/L | EPA 200.7 | 0.05 | 2012-12-27 | 16:08:00 | CM |
| Iron, Fe - Dissolved | <0.03 | mg/L | EPA 200.7 | 0.03 | 2012-12-21 | 17:11:00 | CM |
| Magnesium, Mg - Dissolved | 45.52 | mg/L | EPA 200.7 | 0.01 | 2012-12-21 | 17:11:00 | CM |
| Manganese, Mn - Total | <0.002 | mg/L | EPA 200.7 | 0.002 | 2012-12-27 | 16:08:00 | CM |
| Manganese, Mn - Dissolved | <0.002 | mg/L | EPA 200.7 | 0.002 | 2012-12-21 | 17:11:00 | CM |

Lab Supervisor

Domenic Ibanez
Lab Supervisor

SGS North America Inc. | Minerals Services Division
2035 North Airport Road Huntington UT 84528 t (435) 653-2311 f (435)-653-2436 www.sgs.com/minerals

Member of the SGS Group (Société Générale de Surveillance)

*This document is issued by the Company under its General Conditions of Service accessible at http://www.sgs.com/terms_and_conditions.htm. Attention is drawn to the limitation of liability, indemnification and jurisdiction issues defined therein.*

*Any holder of this document is advised that information contained hereon reflects the Company's findings at the time of its intervention only and within the limits of Client's instructions, if any. The Company's sole responsibility is to its Client and this document does not exonerate parties to a transaction from exercising all their rights and obligations under the transaction documents. Any unauthorized alteration, forgery or falsification of the content or appearance of this document is unlawful and offenders may be prosecuted to the fullest extent of the law*

# Analysis Report

January 16, 2013

**PACIFICORP**
FIELD OFFICE
PO BOX 1005
HUNTINGTON UT 84528



ATTN: Invoice Contact

| | | | |
|---|---|---|---|
| Client Sample ID: | Deer Creek Mine | Sample ID By: | PacifiCorp |
| Date Sampled: | Dec 17, 2012 | Sample Taken By: | VBJ |
| Date Received: | Dec 17, 2012 | Time Received: | 1454 |
| Product Description: | WATER | Time Sampled: | 1200 |
| | | Location: | 10 North XC-5 Borehole |
| | | Mine: | 4 |
| | | Field - pH: | 7.4 pH units |
| | | Field - Temperature: | 11.9 DEG. C |

Comments: Dissolved Metals Filtered at Lab

**SGS Minerals Sample ID: 782-1216963-005**

| TESTS | RESULT | UNIT | METHOD | REPORTING LIMIT | ANALYZED DATE | TIME | ANALYST |
|---|---|---|---|---|---|---|---|
| **METALS BY ICP (continued)** | | | | | | | |
| Potassium, K - Dissolved | 10.47 | mg/L | EPA 200.7 | 0.14 | 2012-12-21 | 17:11:00 | CM |
| Sodium, Na - Dissolved | 121.09 | mg/L | EPA 200.7 | 0.09 | 2012-12-21 | 17:11:00 | CM |

Lab Supervisor

Domenic Ibanez
Lab Supervisor

SGS North America Inc. | Minerals Services Division
2035 North Airport Road Huntington UT 84528 t (435) 653-2311 f (435)-653-2436 www.sgs.com/minerals

Member of the SGS Group (Société Générale de Surveillance)

*This document is issued by the Company under its General Conditions of Service accessible at http://www.sgs.com/terms_and_conditions.htm. Attention is drawn to the limitation of liability, indemnification and jurisdiction issues defined therein.*

*Any holder of this document is advised that information contained hereon reflects the Company's findings at the time of its intervention only and within the limits of Client's instructions, if any. The Company's sole responsibility is to its Client and this document does not exonerate parties to a transaction from exercising all their rights and obligations under the transaction documents. Any unauthorized alteration, forgery or falsification of the content or appearance of this document is unlawful and offenders may be prosecuted to the fullest extent of the law*

# Analysis Report

February 07, 2013

**PACIFICORP**
FIELD OFFICE
PO BOX 1005
HUNTINGTON UT 84528



ATTN: Invoice Contact

| | | | |
|---|---|---|---|
| Client Sample ID: | Deer Creek Mine | Sample ID By: | PacifiCorp |
| Date Sampled: | Jan 23, 2013 | Sample Taken By: | VBJ |
| Date Received: | Jan 23, 2013 | Time Received: | 1409 |
| Product Description: | WATER | Time Sampled: | 1025 |
| | | Location: | 11 W #2 Seal |
| | | Mine: | 4 |
| | | Field - pH: | 7.12 pH units |
| | | Field - Flow: | 4.3 GPM |
| | | Field - Temperature: | 16 DEG. C |

Comments: Dissolved Metals Filtered at Lab

**SGS Minerals Sample ID: 782-1317507-001**

| TESTS | RESULT | UNIT | METHOD | REPORTING LIMIT | ANALYZED DATE | ANALYZED TIME | ANALYST |
|---|---|---|---|---|---|---|---|
| Hardness, mg equivalent CaCO3/L | 307 | mg/L | SM2340-B | 1 | 2013-02-07 | 15:09:57 | CM |
| Anions | 9.92 | meq/L | SM1030E | 0 | 2013-02-07 | 15:09:57 | CM |
| Balance | 1.78 | % | SM1030E | -10 | 2013-02-07 | 15:09:57 | CM |
| Cations | 10.28 | meq/L | SM1030E | 0 | 2013-02-07 | 15:09:57 | CM |
| Acidity | 25 | mg/L | D1067 | 5 | 2013-01-30 | 11:00:00 | CM |
| Alkalinity, mg CaCO3/L (pH 4.5) | 445 | mg/L | SM2320-B | 5 | 2013-01-30 | 12:45:00 | CM |
| Bicarbonate Alkalinity as CaCO3 | 445 | mg/L | SM2320-B | 5 | 2013-01-30 | 12:45:00 | CM |
| Carbonate Alkalinity as CaCO3 | <5 | mg/L | SM2320-B | 5 | 2013-01-30 | 12:45:00 | CM |
| pH | 7.24 | s. u. | SM4500-H | 0.01 | 2013-01-24 | 07:36:00 | AL |
| pH Temperature | 21.90 | °C | SM4500-H | 0.01 | 2013-01-24 | 07:36:00 | AL |
| Conductivity | 925 | µmhos/cm | SM2510 | 0.1 | 2013-01-24 | 07:40:00 | AL |
| Total Dissolved Solids | 539 | mg/L | SM2540-C | 30 | 2013-01-29 | 16:30:00 | DI |
| Chloride, Cl | 8 | mg/L | EPA 300.0 | 1 | 2013-01-25 | 14:16:00 | CM |
| Sulfate, SO4 | 38 | mg/L | EPA 300.0 | 1 | 2013-01-25 | 14:16:00 | CM |
| **METALS BY ICP** | | | | | | | |
| Calcium, Ca - Dissolved | 78.16 | mg/L | EPA 200.7 | 0.03 | 2013-02-07 | 11:04:00 | CM |
| Iron, Fe - Total | 0.51 | mg/L | EPA 200.7 | 0.05 | 2013-01-25 | 11:09:00 | CM |
| Iron, Fe - Dissolved | <0.03 | mg/L | EPA 200.7 | 0.03 | 2013-02-07 | 11:04:00 | CM |
| Magnesium, Mg - Dissolved | 27.20 | mg/L | EPA 200.7 | 0.01 | 2013-02-07 | 11:04:00 | CM |
| Manganese, Mn - Total | 0.082 | mg/L | EPA 200.7 | 0.002 | 2013-01-25 | 11:09:00 | CM |

Lab Supervisor

Domenic Ibanez
Lab Supervisor

SGS North America Inc. | Minerals Services Division
2035 North Airport Road Huntington UT 84528 t (435) 653-2311 f (435)-653-2436 www.sgs.com/minerals

Member of the SGS Group (Société Générale de Surveillance)

*This document is issued by the Company under its General Conditions of Service accessible at http://www.sgs.com/terms_and_conditions.htm. Attention is drawn to the limitation of liability, indemnification and jurisdiction issues defined therein.*

*Any holder of this document is advised that information contained hereon reflects the Company's findings at the time of its intervention only and within the limits of Client's instructions, if any. The Company's sole responsibility is to its Client and this document does not exonerate parties to a transaction from exercising all their rights and obligations under the transaction documents. Any unauthorized alteration, forgery or falsification of the content or appearance of this document is unlawful and offenders may be prosecuted to the fullest extent of the law*

# Analysis Report

February 07, 2013

**PACIFICORP**
FIELD OFFICE
PO BOX 1005
HUNTINGTON UT 84528



ATTN: Invoice Contact

| | | | |
|---|---|---|---|
| Client Sample ID: | Deer Creek Mine | Sample ID By: | PacifiCorp |
| Date Sampled: | Jan 23, 2013 | Sample Taken By: | VBJ |
| Date Received: | Jan 23, 2013 | Time Received: | 1409 |
| Product Description: | WATER | Time Sampled: | 1025 |
| | | Location: | 11 W #2 Seal |
| | | Mine: | 4 |
| | | Field - pH: | 7.12 pH units |
| | | Field - Flow: | 4.3 GPM |
| | | Field - Temperature: | 16 DEG. C |

Comments: Dissolved Metals Filtered at Lab

**SGS Minerals Sample ID: 782-1317507-001**

| TESTS | RESULT | UNIT | METHOD | REPORTING LIMIT | ANALYZED DATE | ANALYZED TIME | ANALYST |
|---|---|---|---|---|---|---|---|
| **METALS BY ICP (continued)** | | | | | | | |
| Manganese, Mn - Dissolved | 0.070 | mg/L | EPA 200.7 | 0.002 | 2013-02-07 | 11:04:00 | CM |
| Potassium, K - Dissolved | 10.11 | mg/L | EPA 200.7 | 0.14 | 2013-02-07 | 11:04:00 | CM |
| Sodium, Na - Dissolved | 89.30 | mg/L | EPA 200.7 | 0.09 | 2013-02-07 | 11:04:00 | CM |

Lab Supervisor

Domenic Ibanez
Lab Supervisor

SGS North America Inc. | Minerals Services Division
2035 North Airport Road Huntington UT 84528 t (435) 653-2311 f (435)-653-2436 www.sgs.com/minerals

Member of the SGS Group (Société Générale de Surveillance)

*This document is issued by the Company under its General Conditions of Service accessible at http://www.sgs.com/terms_and_conditions.htm. Attention is drawn to the limitation of liability, indemnification and jurisdiction issues defined therein.*

*Any holder of this document is advised that information contained hereon reflects the Company's findings at the time of its intervention only and within the limits of Client's instructions, if any. The Company's sole responsibility is to its Client and this document does not exonerate parties to a transaction from exercising all their rights and obligations under the transaction documents. Any unauthorized alteration, forgery or falsification of the content or appearance of this document is unlawful and offenders may be prosecuted to the fullest extent of the law*

# Analysis Report

February 07, 2013

**PACIFICORP**
FIELD OFFICE
PO BOX 1005
HUNTINGTON UT 84528



ATTN: Invoice Contact

| | | | |
|---|---|---|---|
| Client Sample ID: | Deer Creek Mine | Sample ID By: | PacifiCorp |
| Date Sampled: | Jan 23, 2013 | Sample Taken By: | VBJ |
| Date Received: | Jan 23, 2013 | Time Received: | 1409 |
| Product Description: | WATER | Time Sampled: | 1055 |
| | | Location: | 17 W #2 Seal |
| | | Mine: | 4 |
| | | Field - pH: | 7.38 pH units |
| | | Field - Temperature: | 12.9 DEG. C |

Comments: Dissolved Metals Filtered at Lab

**SGS Minerals Sample ID: 782-1317507-002**

| TESTS | RESULT | UNIT | METHOD | REPORTING LIMIT | ANALYZED DATE | TIME | ANALYST |
|---|---|---|---|---|---|---|---|
| Hardness, mg equivalent CaCO3/L | 370 | mg/L | SM2340-B | 1 | 2013-02-07 | 15:09:57 | CM |
| Anions | 10.45 | meq/L | SM1030E | 0 | 2013-02-07 | 15:09:57 | CM |
| Balance | 1.20 | % | SM1030E | -10 | 2013-02-07 | 15:09:57 | CM |
| Cations | 10.71 | meq/L | SM1030E | 0 | 2013-02-07 | 15:09:57 | CM |
| Acidity | 17 | mg/L | D1067 | 5 | 2013-01-30 | 11:00:00 | CM |
| Alkalinity, mg CaCO3/L (pH 4.5) | 368 | mg/L | SM2320-B | 5 | 2013-01-30 | 12:45:00 | CM |
| Bicarbonate Alkalinity as CaCO3 | 368 | mg/L | SM2320-B | 5 | 2013-01-30 | 12:45:00 | CM |
| Carbonate Alkalinity as CaCO3 | <5 | mg/L | SM2320-B | 5 | 2013-01-30 | 12:45:00 | CM |
| pH | 7.26 | s. u. | SM4500-H | 0.01 | 2013-01-24 | 07:38:00 | AL |
| pH Temperature | 22.20 | °C | SM4500-H | 0.01 | 2013-01-24 | 07:38:00 | AL |
| Conductivity | 973 | µmhos/cm | SM2510 | 0.1 | 2013-01-24 | 07:40:00 | AL |
| Total Dissolved Solids | 568 | mg/L | SM2540-C | 30 | 2013-01-29 | 16:30:00 | DI |
| Chloride, Cl | 12 | mg/L | EPA 300.0 | 1 | 2013-01-25 | 14:16:00 | CM |
| Sulfate, SO4 | 133 | mg/L | EPA 300.0 | 1 | 2013-01-25 | 14:16:00 | CM |
| **METALS BY ICP** | | | | | | | |
| Calcium, Ca - Dissolved | 70.71 | mg/L | EPA 200.7 | 0.03 | 2013-02-04 | 14:07:00 | CM |
| Iron, Fe - Total | 3.10 | mg/L | EPA 200.7 | 0.05 | 2013-01-25 | 11:09:00 | CM |
| Iron, Fe - Dissolved | <0.03 | mg/L | EPA 200.7 | 0.03 | 2013-02-04 | 14:07:00 | CM |
| Magnesium, Mg - Dissolved | 46.95 | mg/L | EPA 200.7 | 0.01 | 2013-02-04 | 14:07:00 | CM |
| Manganese, Mn - Total | 0.025 | mg/L | EPA 200.7 | 0.002 | 2013-01-25 | 11:09:00 | CM |
| Manganese, Mn - Dissolved | 0.024 | mg/L | EPA 200.7 | 0.002 | 2013-02-04 | 14:07:00 | CM |

Lab Supervisor

Domenic Ibanez
Lab Supervisor

SGS North America Inc. | Minerals Services Division
2035 North Airport Road Huntington UT 84528 t (435) 653-2311 f (435)-653-2436 www.sgs.com/minerals

Member of the SGS Group (Société Générale de Surveillance)

*This document is issued by the Company under its General Conditions of Service accessible at http://www.sgs.com/terms_and_conditions.htm. Attention is drawn to the limitation of liability, indemnification and jurisdiction issues defined therein.*

*Any holder of this document is advised that information contained hereon reflects the Company's findings at the time of its intervention only and within the limits of Client's instructions, if any. The Company's sole responsibility is to its Client and this document does not exonerate parties to a transaction from exercising all their rights and obligations under the transaction documents. Any unauthorized alteration, forgery or falsification of the content or appearance of this document is unlawful and offenders may be prosecuted to the fullest extent of the law*

SGS

# Analysis Report

February 07, 2013



**PACIFICORP**
FIELD OFFICE
PO BOX 1005
HUNTINGTON UT 84528

ATTN: Invoice Contact

| | | | |
|---|---|---|---|
| Client Sample ID: | Deer Creek Mine | Sample ID By: | PacifiCorp |
| Date Sampled: | Jan 23, 2013 | Sample Taken By: | VBJ |
| Date Received: | Jan 23, 2013 | Time Received: | 1409 |
| Product Description: | WATER | Time Sampled: | 1055 |
| | | Location: | 17 W #2 Seal |
| | | Mine: | 4 |
| | | Field - pH: | 7.38 pH units |
| | | Field - Temperature: | 12.9 DEG. C |

Comments: Dissolved Metals Filtered at Lab

**SGS Minerals Sample ID: 782-1317507-002**

| TESTS | RESULT | UNIT | METHOD | REPORTING LIMIT | ANALYZED DATE | ANALYZED TIME | ANALYST |
|---|---|---|---|---|---|---|---|
| **METALS BY ICP (continued)** | | | | | | | |
| Potassium, K - Dissolved | 11.87 | mg/L | EPA 200.7 | 0.14 | 2013-02-04 | 14:07:00 | CM |
| Sodium, Na - Dissolved | 69.27 | mg/L | EPA 200.7 | 0.09 | 2013-02-04 | 14:07:00 | CM |

Lab Supervisor

Domenic Ibanez
Lab Supervisor

SGS North America Inc. | Minerals Services Division
2035 North Airport Road Huntington UT 84528 t (435) 653-2311 f (435)-653-2436 www.sgs.com/minerals

Member of the SGS Group (Société Générale de Surveillance)

*This document is issued by the Company under its General Conditions of Service accessible at http://www.sgs.com/terms_and_concitions.htm. Attention is drawn to the limitation of liability, indemnification and jurisdiction issues defined therein.*

*Any holder of this document is advised that information contained hereon reflects the Company's findings at the time of its intervention only and within the limits of Client's instructions, if any. The Company's sole responsibility is to its Client and this document does not exonerate parties to a transaction from exercising all their rights and obligations under the transaction documents. Any unauthorized alteration, forgery or falsification of the content or appearance of this document is unlawful and offenders may be prosecuted to the fullest extent of the law*

# Analysis Report

February 07, 2013

**PACIFICORP**
FIELD OFFICE
PO BOX 1005
HUNTINGTON UT 84528



ATTN: Invoice Contact

| | | | |
|---|---|---|---|
| Client Sample ID: | Deer Creek Mine | Sample ID By: | PacifiCorp |
| Date Sampled: | Jan 23, 2013 | Sample Taken By: | VBJ |
| Date Received: | Jan 23, 2013 | Time Received: | 1409 |
| Product Description: | WATER | Time Sampled: | 1120 |
| | | Location: | 10 N XC-5 Borehole |
| | | Mine: | 4 |
| | | Field - pH: | 7.25 pH units |
| | | Field - Flow: | 64 GPM |
| | | Field - Temperature: | 11.9 DEG. C |

Comments: Dissolved Metals Filtered at Lab

**SGS Minerals Sample ID: 782-1317507-003**

| TESTS | RESULT | UNIT | METHOD | REPORTING LIMIT | ANALYZED DATE | ANALYZED TIME | ANALYST |
|---|---|---|---|---|---|---|---|
| Hardness, mg equivalent CaCO3/L | 363 | mg/L | SM2340-B | 1 | 2013-02-07 | 15:09:57 | CM |
| Anions | 13.18 | meq/L | SM1030E | 0 | 2013-02-07 | 15:09:57 | CM |
| Balance | 0.35 | % | SM1030E | -10 | 2013-02-07 | 15:09:57 | CM |
| Cations | 13.27 | meq/L | SM1030E | 0 | 2013-02-07 | 15:09:57 | CM |
| Acidity | 16 | mg/L | D1067 | 5 | 2013-01-30 | 11:00:00 | CM |
| Alkalinity, mg CaCO3/L (pH 4.5) | 448 | mg/L | SM2320-B | 5 | 2013-01-30 | 12:45:00 | CM |
| Bicarbonate Alkalinity as CaCO3 | 448 | mg/L | SM2320-B | 5 | 2013-01-30 | 12:45:00 | CM |
| Carbonate Alkalinity as CaCO3 | <5 | mg/L | SM2320-B | 5 | 2013-01-30 | 12:45:00 | CM |
| pH | 7.37 | s. u. | SM4500-H | 0.01 | 2013-01-24 | 07:40:00 | AL |
| pH Temperature | 22.00 | °C | SM4500-H | 0.01 | 2013-01-24 | 07:40:00 | AL |
| Conductivity | 1187 | µmhos/cm | SM2510 | 0.1 | 2013-01-24 | 07:40:00 | AL |
| Total Dissolved Solids | 744 | mg/L | SM2540-C | 30 | 2013-01-29 | 16:30:00 | DI |
| Chloride, Cl | 7 | mg/L | EPA 300.0 | 1 | 2013-01-25 | 14:16:00 | CM |
| Sulfate, SO4 | 193 | mg/L | EPA 300.0 | 1 | 2013-01-25 | 14:16:00 | CM |
| **METALS BY ICP** | | | | | | | |
| Calcium, Ca - Dissolved | 70.50 | mg/L | EPA 200.7 | 0.03 | 2013-02-04 | 14:07:00 | CM |
| Iron, Fe - Total | <0.05 | mg/L | EPA 200.7 | 0.05 | 2013-01-25 | 11:09:00 | CM |
| Iron, Fe - Dissolved | <0.03 | mg/L | EPA 200.7 | 0.03 | 2013-02-04 | 14:07:00 | CM |
| Magnesium, Mg - Dissolved | 45.39 | mg/L | EPA 200.7 | 0.01 | 2013-02-04 | 14:07:00 | CM |
| Manganese, Mn - Total | <0.002 | mg/L | EPA 200.7 | 0.002 | 2013-01-25 | 11:09:00 | CM |

Lab Supervisor

Domenic Ibanez
Lab Supervisor

SGS North America Inc. | Minerals Services Division
2035 North Airport Road Huntington UT 84528 t (435) 653-2311 f (435)-653-2436 www.sgs.com/minerals

Member of the SGS Group (Société Générale de Surveillance)

*This document is issued by the Company under its General Conditions of Service accessible at http://www.sgs.com/terms_and_conditions.htm. Attention is drawn to the limitation of liability, indemnification and jurisdiction issues defined therein.*

*Any holder of this document is advised that information contained hereon reflects the Company's findings at the time of its intervention only and within the limits of Client's instructions, if any. The Company's sole responsibility is to its Client and this document does not exonerate parties to a transaction from exercising all their rights and obligations under the transaction documents. Any unauthorized alteration, forgery or falsification of the content or appearance of this document is unlawful and offenders may be prosecuted to the fullest extent of the law*

# Analysis Report

February 07, 2013

**PACIFICORP**
FIELD OFFICE
PO BOX 1005
HUNTINGTON UT 84528



ATTN: Invoice Contact

| | | | |
|---|---|---|---|
| Client Sample ID: | Deer Creek Mine | Sample ID By: | PacifiCorp |
| Date Sampled: | Jan 23, 2013 | Sample Taken By: | VBJ |
| Date Received: | Jan 23, 2013 | Time Received: | 1409 |
| Product Description: | WATER | Time Sampled: | 1120 |
| | | Location: | 10 N XC-5 Borehole |
| | | Mine: | 4 |
| | | Field - pH: | 7.25 pH units |
| | | Field - Flow: | 64 GPM |
| | | Field - Temperature: | 11.9 DEG. C |

Comments: Dissolved Metals Filtered at Lab

**SGS Minerals Sample ID: 782-1317507-003**

| TESTS | RESULT | UNIT | METHOD | REPORTING LIMIT | ANALYZED DATE | TIME | ANALYST |
|---|---|---|---|---|---|---|---|
| **METALS BY ICP (continued)** | | | | | | | |
| Manganese, Mn - Dissolved | <0.002 | mg/L | EPA 200.7 | 0.002 | 2013-02-04 | 14:07:00 | CM |
| Potassium, K - Dissolved | 11.20 | mg/L | EPA 200.7 | 0.14 | 2013-02-04 | 14:07:00 | CM |
| Sodium, Na - Dissolved | 131.87 | mg/L | EPA 200.7 | 0.09 | 2013-02-04 | 14:07:00 | CM |

Lab Supervisor

Domenic Ibanez
Lab Supervisor

SGS North America Inc. | Minerals Services Division
2035 North Airport Road Huntington UT 84528 t (435) 653-2311 f (435)-653-2436 www.sgs.com/minerals

Member of the SGS Group (Société Générale de Surveillance)

*This document is issued by the Company under its General Conditions of Service accessible at http://www.sgs.com/terms_and_conditions.htm. Attention is drawn to the limitation of liability, indemnification and jurisdiction issues defined therein.*

*Any holder of this document is advised that information contained hereon reflects the Company's findings at the time of its intervention only and within the limits of Client's instructions, if any. The Company's sole responsibility is to its Client and this document does not exonerate parties to a transaction from exercising all their rights and obligations under the transaction documents. Any unauthorized alteration, forgery or falsification of the content or appearance of this document is unlawful and offenders may be prosecuted to the fullest extent of the law*

# Analysis Report

March 08, 2013

**PACIFICORP**
FIELD OFFICE
PO BOX 1005
HUNTINGTON UT 84528



| | | | |
|---|---|---|---|
| Client Sample ID: | Deer Creek Mine | Sample ID By: | PacifiCorp |
| Date Sampled: | Feb 21, 2013 | Sample Taken By: | VBJ |
| Date Received: | Feb 21, 2013 | Time Received: | 1458 |
| Product Description: | WATER | Time Sampled: | 1220 |
| | | Location: | 11th W #2 Seal |
| | | Mine: | 4 |
| | | Field - pH: | 7.45 pH units |
| | | Field - Flow: | 5.1 GPM |
| | | Field - Temperature: | 15.9 DEG. C |

Comments: Dissolved Metals Filtered at Lab

**SGS Minerals Sample ID: 782-1317949-003**

| TESTS | RESULT | UNIT | METHOD | REPORTING LIMIT | ANALYZED DATE | ANALYZED TIME | ANALYST |
|---|---|---|---|---|---|---|---|
| Hardness, mg equivalent CaCO3/L | 309 | mg/L | SM2340-B | 1 | 2013-03-06 | 15:31:44 | CM |
| Anions | 10.00 | meq/L | SM1030E | 0 | 2013-03-06 | 15:31:24 | CM |
| Balance | 1.37 | % | SM1030E | -10 | 2013-03-06 | 15:31:24 | CM |
| Cations | 10.32 | meq/L | SM1030E | 0 | 2013-03-06 | 15:31:24 | CM |
| Acidity | 31 | mg/L | D1067 | 5 | 2013-03-05 | 13:45:00 | CM |
| Alkalinity, mg CaCO3/L (pH 4.5) | 452 | mg/L | SM2320-B | 5 | 2013-03-06 | 10:45:00 | AL |
| Bicarbonate Alkalinity as CaCO3 | 452 | mg/L | SM2320-B | 5 | 2013-03-06 | 10:45:00 | AL |
| Carbonate Alkalinity as CaCO3 | <5 | mg/L | SM2320-B | 5 | 2013-03-06 | 10:45:00 | AL |
| pH | 7.12 | s. u. | SM4500-H | 0.01 | 2013-02-22 | 08:26:00 | CM |
| pH Temperature | 21.90 | °C | SM4500-H | 0.01 | 2013-02-22 | 08:26:00 | CM |
| Conductivity | 933 | µmhos/cm | SM2510 | 0.1 | 2013-02-22 | 08:25:00 | CM |
| Total Dissolved Solids | 518 | mg/L | SM2540-C | 30 | 2013-02-26 | 12:55:00 | CM |
| Chloride, Cl | 9 | mg/L | EPA 300.0 | 1 | 2013-02-22 | 15:52:00 | CM |
| Sulfate, SO4 | 37 | mg/L | EPA 300.0 | 1 | 2013-02-22 | 15:52:00 | CM |
| **METALS BY ICP** | | | | | | | |
| Calcium, Ca - Dissolved | 78.48 | mg/L | EPA 200.7 | 0.03 | 2013-02-26 | 11:43:00 | CM |
| Iron, Fe - Total | 2.36 | mg/L | EPA 200.7 | 0.05 | 2013-03-01 | 10:42:00 | CM |
| Iron, Fe - Dissolved | <0.03 | mg/L | EPA 200.7 | 0.03 | 2013-02-26 | 11:43:00 | CM |
| Magnesium, Mg - Dissolved | 27.39 | mg/L | EPA 200.7 | 0.01 | 2013-02-26 | 11:43:00 | CM |
| Manganese, Mn - Total | 0.092 | mg/L | EPA 200.7 | 0.002 | 2013-03-01 | 10:42:00 | CM |

Lab Supervisor

Domenic Ibanez
Lab Supervisor

SGS North America Inc. | Minerals Services Division
2035 North Airport Road Huntington UT 84528 t (435) 653-2311 f (435)-653-2436 www.sgs.com/minerals

Member of the SGS Group (Société Générale de Surveillance)

*This document is issued by the Company under its General Conditions of Service accessible at http://www.sgs.com/terms_and_conditions.htm. Attention is drawn to the limitation of liability, indemnification and jurisdiction issues defined therein.*

*Any holder of this document is advised that information contained hereon reflects the Company's findings at the time of its intervention only and within the limits of Client's instructions, if any. The Company's sole responsibility is to its Client and this document does not exonerate parties to a transaction from exercising all their rights and obligations under the transaction documents. Any unauthorized alteration, forgery or falsification of the content or appearance of this document is unlawful and offenders may be prosecuted to the fullest extent of the law*

# Analysis Report

March 08, 2013

**PACIFICORP**
FIELD OFFICE
PO BOX 1005
HUNTINGTON UT 84528



| | | | |
|---|---|---|---|
| Client Sample ID: | Deer Creek Mine | Sample ID By: | PacifiCorp |
| Date Sampled: | Feb 21, 2013 | Sample Taken By: | VBJ |
| Date Received: | Feb 21, 2013 | Time Received: | 1458 |
| Product Description: | WATER | Time Sampled: | 1220 |
| | | Location: | 11th W #2 Seal |
| | | Mine: | 4 |
| | | Field - pH: | 7.45 pH units |
| | | Field - Flow: | 5.1 GPM |
| | | Field - Temperature: | 15.9 DEG. C |

Comments: Dissolved Metals Filtered at Lab

**SGS Minerals Sample ID: 782-1317949-003**

| TESTS | RESULT | UNIT | METHOD | REPORTING LIMIT | ANALYZED DATE | TIME | ANALYST |
|---|---|---|---|---|---|---|---|
| **METALS BY ICP (continued)** | | | | | | | |
| Manganese, Mn - Dissolved | 0.092 | mg/L | EPA 200.7 | 0.002 | 2013-02-26 | 11:43:00 | CM |
| Potassium, K - Dissolved | 10.19 | mg/L | EPA 200.7 | 0.14 | 2013-02-26 | 11:43:00 | CM |
| Sodium, Na - Dissolved | 89.38 | mg/L | EPA 200.7 | 0.09 | 2013-02-26 | 11:43:00 | CM |

Lab Supervisor

Domenic Ibanez
Lab Supervisor

SGS North America Inc. | Minerals Services Division
2035 North Airport Road Huntington UT 84528 t (435) 653-2311 f (435)-653-2436 www.sgs.com/minerals

Member of the SGS Group (Société Générale de Surveillance)

*This document is issued by the Company under its General Conditions of Service accessible at http://www.sgs.com/terms_and_conditions.htm. Attention is drawn to the limitation of liability, indemnification and jurisdiction issues defined therein.*

*Any holder of this document is advised that information contained hereon reflects the Company's findings at the time of its intervention only and within the limits of Client's instructions, if any. The Company's sole responsibility is to its Client and this document does not exonerate parties to a transaction from exercising all their rights and obligations under the transaction documents. Any unauthorized alteration, forgery or falsification of the content or appearance of this document is unlawful and offenders may be prosecuted to the fullest extent of the law*

SGS

# Analysis Report

March 08, 2013

**PACIFICORP**
FIELD OFFICE
PO BOX 1005
HUNTINGTON UT 84528



| | | | |
|---|---|---|---|
| Client Sample ID: | Deer Creek Mine | Sample ID By: | PacifiCorp |
| Date Sampled: | Feb 21, 2013 | Sample Taken By: | VBJ |
| Date Received: | Feb 21, 2013 | Time Received: | 1458 |
| Product Description: | WATER | Time Sampled: | 1150 |
| | | Location: | 17W #2 Seal |
| | | Mine: | 4 |
| | | Field - pH: | 7.81 pH units |
| | | Field - Temperature: | 13.0 DEG. C |

Comments: Dissolved Metals Filtered at Lab

**SGS Minerals Sample ID: 782-1317949-002**

| TESTS | RESULT | UNIT | METHOD | REPORTING LIMIT | ANALYZED DATE | TIME | ANALYST |
|---|---|---|---|---|---|---|---|
| Hardness, mg equivalent CaCO3/L | 371 | mg/L | SM2340-B | 1 | 2013-03-06 | 15:31:44 | CM |
| Anions | 10.21 | meq/L | SM1030E | 0 | 2013-03-06 | 15:31:24 | CM |
| Balance | 2.21 | % | SM1030E | -10 | 2013-03-06 | 15:31:24 | CM |
| Cations | 10.67 | meq/L | SM1030E | 0 | 2013-03-06 | 15:31:24 | CM |
| Acidity | 15 | mg/L | D1067 | 5 | 2013-03-05 | 13:45:00 | CM |
| Alkalinity, mg CaCO3/L (pH 4.5) | 356 | mg/L | SM2320-B | 5 | 2013-03-06 | 10:45:00 | AL |
| Bicarbonate Alkalinity as CaCO3 | 356 | mg/L | SM2320-B | 5 | 2013-03-06 | 10:45:00 | AL |
| Carbonate Alkalinity as CaCO3 | <5 | mg/L | SM2320-B | 5 | 2013-03-06 | 10:45:00 | AL |
| pH | 7.34 | s. u. | SM4500-H | 0.01 | 2013-02-22 | 08:24:00 | CM |
| pH Temperature | 22.10 | °C | SM4500-H | 0.01 | 2013-02-22 | 08:24:00 | CM |
| Conductivity | 956 | µmhos/cm | SM2510 | 0.1 | 2013-02-22 | 08:25:00 | CM |
| Total Dissolved Solids | 544 | mg/L | SM2540-C | 30 | 2013-02-26 | 12:55:00 | CM |
| Chloride, Cl | 12 | mg/L | EPA 300.0 | 1 | 2013-02-22 | 15:52:00 | CM |
| Sulfate, SO4 | 132 | mg/L | EPA 300.0 | 1 | 2013-02-22 | 15:52:00 | CM |
| **METALS BY ICP** | | | | | | | |
| Calcium, Ca - Dissolved | 70.25 | mg/L | EPA 200.7 | 0.03 | 2013-02-26 | 11:43:00 | CM |
| Iron, Fe - Total | 2.99 | mg/L | EPA 200.7 | 0.05 | 2013-03-01 | 10:42:00 | CM |
| Iron, Fe - Dissolved | <0.03 | mg/L | EPA 200.7 | 0.03 | 2013-02-26 | 11:43:00 | CM |
| Magnesium, Mg - Dissolved | 47.58 | mg/L | EPA 200.7 | 0.01 | 2013-02-26 | 11:43:00 | CM |
| Manganese, Mn - Total | 0.025 | mg/L | EPA 200.7 | 0.002 | 2013-03-01 | 10:42:00 | CM |
| Manganese, Mn - Dissolved | 0.025 | mg/L | EPA 200.7 | 0.002 | 2013-02-26 | 11:43:00 | CM |

Lab Supervisor

Domenic Ibanez
Lab Supervisor

SGS North America Inc. | Minerals Services Division
2035 North Airport Road Huntington UT 84528 t (435) 653-2311 f (435)-653-2436 www.sgs.com/minerals

Member of the SGS Group (Société Générale de Surveillance)

*This document is issued by the Company under its General Conditions of Service accessible at http://www.sgs.com/terms_and_conditions.htm. Attention is drawn to the limitation of liability, indemnification and jurisdiction issues defined therein.*

*Any holder of this document is advised that information contained hereon reflects the Company's findings at the time of its intervention only and within the limits of Client's instructions, if any. The Company's sole responsibility is to its Client and this document does not exonerate parties to a transaction from exercising all their rights and obligations under the transaction documents. Any unauthorized alteration, forgery or falsification of the content or appearance of this document is unlawful and offenders may be prosecuted to the fullest extent of the law*

SGS

# Analysis Report

March 08, 2013

**PACIFICORP**
FIELD OFFICE
PO BOX 1005
HUNTINGTON UT 84528



| | | | |
|---|---|---|---|
| Client Sample ID: | Deer Creek Mine | Sample ID By: | PacifiCorp |
| Date Sampled: | Feb 21, 2013 | Sample Taken By: | VBJ |
| Date Received: | Feb 21, 2013 | Time Received: | 1458 |
| Product Description: | WATER | Time Sampled: | 1150 |
| | | Location: | 17W #2 Seal |
| | | Mine: | 4 |
| | | Field - pH: | 7.81 pH units |
| | | Field - Temperature: | 13.0 DEG. C |

Comments: Dissolved Metals Filtered at Lab

**SGS Minerals Sample ID: 782-1317949-002**

| TESTS | RESULT | UNIT | METHOD | REPORTING LIMIT | ANALYZED DATE | TIME | ANALYST |
|---|---|---|---|---|---|---|---|
| **METALS BY ICP (continued)** | | | | | | | |
| Potassium, K - Dissolved | 11.53 | mg/L | EPA 200.7 | 0.14 | 2013-02-26 | 11:43:00 | CM |
| Sodium, Na - Dissolved | 67.83 | mg/L | EPA 200.7 | 0.09 | 2013-02-26 | 11:43:00 | CM |

Lab Supervisor

Domenic Ibanez
Lab Supervisor

SGS North America Inc. | Minerals Services Division
2035 North Airport Road Huntington UT 84528 t (435) 653-2311 f (435)-653-2436 www.sgs.com/minerals

Member of the SGS Group (Société Générale de Surveillance)

*This document is issued by the Company under its General Conditions of Service accessible at http://www.sgs.com/terms_and_conditions.htm. Attention is drawn to the limitation of liability, indemnification and jurisdiction issues defined therein.*

*Any holder of this document is advised that information contained hereon reflects the Company's findings at the time of its intervention only and within the limits of Client's instructions, if any. The Company's sole responsibility is to its Client and this document does not exonerate parties to a transaction from exercising all their rights and obligations under the transaction documents. Any unauthorized alteration, forgery or falsification of the content or appearance of this document is unlawful and offenders may be prosecuted to the fullest extent of the law*

# Analysis Report

March 08, 2013

**PACIFICORP**
FIELD OFFICE
PO BOX 1005
HUNTINGTON UT 84528



| | | | |
|---|---|---|---|
| Client Sample ID: | Deer Creek Mine | Sample ID By: | PacifiCorp |
| Date Sampled: | Feb 21, 2013 | Sample Taken By: | VBJ |
| Date Received: | Feb 21, 2013 | Time Received: | 1458 |
| Product Description: | WATER | Time Sampled: | 1130 |
| | | Location: | 10N XC-5 Borehole |
| | | Mine: | 4 |
| | | Field - pH: | 7.78 pH units |
| | | Field - Flow: | 60 GPM |
| | | Field - Temperature: | 12.1 DEG. C |

Comments: Dissolved Metals Filtered at Lab

**SGS Minerals Sample ID: 782-1317949-001**

| TESTS | RESULT | UNIT | METHOD | REPORTING LIMIT | ANALYZED DATE | ANALYZED TIME | ANALYST |
|---|---|---|---|---|---|---|---|
| Hardness, mg equivalent CaCO3/L | 372 | mg/L | SM2340-B | 1 | 2013-03-06 | 15:31:44 | CM |
| Anions | 13.41 | meq/L | SM1030E | 0 | 2013-03-06 | 15:31:24 | CM |
| Balance | 0.33 | % | SM1030E | -10 | 2013-03-06 | 15:31:24 | CM |
| Cations | 13.50 | meq/L | SM1030E | 0 | 2013-03-06 | 15:31:24 | CM |
| Acidity | 17 | mg/L | D1067 | 5 | 2013-03-05 | 13:45:00 | CM |
| Alkalinity, mg CaCO3/L (pH 4.5) | 453 | mg/L | SM2320-B | 5 | 2013-03-06 | 10:45:00 | AL |
| Bicarbonate Alkalinity as CaCO3 | 453 | mg/L | SM2320-B | 5 | 2013-03-06 | 10:45:00 | AL |
| Carbonate Alkalinity as CaCO3 | <5 | mg/L | SM2320-B | 5 | 2013-03-06 | 10:45:00 | AL |
| pH | 7.39 | s. u. | SM4500-H | 0.01 | 2013-02-22 | 08:22:00 | CM |
| pH Temperature | 22.10 | °C | SM4500-H | 0.01 | 2013-02-22 | 08:22:00 | CM |
| Conductivity | 1178 | µmhos/cm | SM2510 | 0.1 | 2013-02-22 | 08:25:00 | CM |
| Total Dissolved Solids | 732 | mg/L | SM2540-C | 30 | 2013-02-26 | 12:55:00 | CM |
| Chloride, Cl | 8 | mg/L | EPA 300.0 | 1 | 2013-02-22 | 15:52:00 | CM |
| Sulfate, SO4 | 198 | mg/L | EPA 300.0 | 1 | 2013-02-22 | 15:52:00 | CM |
| **METALS BY ICP** | | | | | | | |
| Calcium, Ca - Dissolved | 72.69 | mg/L | EPA 200.7 | 0.03 | 2013-02-26 | 11:43:00 | CM |
| Iron, Fe - Total | <0.05 | mg/L | EPA 200.7 | 0.05 | 2013-03-01 | 10:42:00 | CM |
| Iron, Fe - Dissolved | <0.03 | mg/L | EPA 200.7 | 0.03 | 2013-02-26 | 11:43:00 | CM |
| Magnesium, Mg - Dissolved | 46.31 | mg/L | EPA 200.7 | 0.01 | 2013-02-26 | 11:43:00 | CM |
| Manganese, Mn - Total | <0.002 | mg/L | EPA 200.7 | 0.002 | 2013-03-01 | 10:42:00 | CM |

Lab Supervisor

Domenic Ibanez
Lab Supervisor

SGS North America Inc. | Minerals Services Division
2035 North Airport Road Huntington UT 84528 t (435) 653-2311 f (435)-653-2436 www.sgs.com/minerals

Member of the SGS Group (Société Générale de Surveillance)

*This document is issued by the Company under its General Conditions of Service accessible at http://www.sgs.com/terms_and_conditions.htm. Attention is drawn to the limitation of liability, indemnification and jurisdiction issues defined therein.*

*Any holder of this document is advised that information contained hereon reflects the Company's findings at the time of its intervention only and within the limits of Client's instructions, if any. The Company's sole responsibility is to its Client and this document does not exonerate parties to a transaction from exercising all their rights and obligations under the transaction documents. Any unauthorized alteration, forgery or falsification of the content or appearance of this document is unlawful and offenders may be prosecuted to the fullest extent of the law*

# Analysis Report

March 08, 2013

**PACIFICORP**
FIELD OFFICE
PO BOX 1005
HUNTINGTON UT 84528



| | | | |
|---|---|---|---|
| Client Sample ID: | Deer Creek Mine | Sample ID By: | PacifiCorp |
| Date Sampled: | Feb 21, 2013 | Sample Taken By: | VBJ |
| Date Received: | Feb 21, 2013 | Time Received: | 1458 |
| Product Description: | WATER | Time Sampled: | 1130 |
| | | Location: | 10N XC-5 Borehole |
| | | Mine: | 4 |
| | | Field - pH: | 7.78 pH units |
| | | Field - Flow: | 60 GPM |
| | | Field - Temperature: | 12.1 DEG. C |

Comments: Dissolved Metals Filtered at Lab

**SGS Minerals Sample ID: 782-1317949-001**

| TESTS | RESULT | UNIT | METHOD | REPORTING LIMIT | ANALYZED DATE | TIME | ANALYST |
|---|---|---|---|---|---|---|---|
| **METALS BY ICP (continued)** | | | | | | | |
| Manganese, Mn - Dissolved | <0.002 | mg/L | EPA 200.7 | 0.002 | 2013-02-26 | 11:43:00 | CM |
| Potassium, K - Dissolved | 11.10 | mg/L | EPA 200.7 | 0.14 | 2013-02-26 | 11:43:00 | CM |
| Sodium, Na - Dissolved | 132.82 | mg/L | EPA 200.7 | 0.09 | 2013-02-26 | 11:43:00 | CM |

Lab Supervisor

Domenic Ibanez
Lab Supervisor

SGS North America Inc. | Minerals Services Division
2035 North Airport Road Huntington UT 84528 t (435) 653-2311 f (435)-653-2436 www.sgs.com/minerals

Member of the SGS Group (Société Générale de Surveillance)

*This document is issued by the Company under its General Conditions of Service accessible at http://www.sgs.com/terms_and_conditions.htm. Attention is drawn to the limitation of liability, indemnification and jurisdiction issues defined therein.*

*Any holder of this document is advised that information contained hereon reflects the Company's findings at the time of its intervention only and within the limits of Client's instructions, if any. The Company's sole responsibility is to its Client and this document does not exonerate parties to a transaction from exercising all their rights and obligations under the transaction documents. Any unauthorized alteration, forgery or falsification of the content or appearance of this document is unlawful and offenders may be prosecuted to the fullest extent of the law*

# Analysis Report

April 01, 2013

**PACIFICORP**
FIELD OFFICE
PO BOX 1005
HUNTINGTON UT 84528



| | | | |
|---|---|---|---|
| Client Sample ID: | Deer Creek Mine | Sample ID By: | PacifiCorp |
| Date Sampled: | Mar 21, 2013 | Sample Taken By: | VBJ |
| Date Received: | Mar 21, 2013 | Time Received: | 1619 |
| Product Description: | WATER | Time Sampled: | 1130 |
| | | Location: | 11TH W #2 SEAL |
| | | Mine: | 4 |
| | | Field - pH: | 6.81 pH units |
| | | Field - Flow: | 5 GPM |
| | | Field - Temperature: | 15.9 DEG. C |

Comments: Dissolved Metals Filtered at Lab

**SGS Minerals Sample ID: 782-1318386-003**

| TESTS | RESULT | UNIT | METHOD | REPORTING LIMIT | ANALYZED DATE | ANALYZED TIME | ANALYST |
|---|---|---|---|---|---|---|---|
| Hardness, mg equivalent CaCO3/L | 312 | mg/L | SM2340-B | 1 | 2013-03-28 | 12:00:00 | DI |
| Acidity | 42 | mg/L | D1067 | 5 | 2013-03-27 | 13:30:00 | CM |
| Anions | 10.03 | meq/L | SM1030E | 0 | 2013-03-28 | 12:00:00 | DI |
| Balance | 2.32 | % | SM1030E | -10 | 2013-03-28 | 12:00:00 | DI |
| Cations | 10.51 | meq/L | SM1030E | 0 | 2013-03-28 | 12:00:00 | DI |
| Alkalinity, mg CaCO3/L (pH 4.5) | 449 | mg/L | SM2320-B | 5 | 2013-03-22 | 12:39:00 | CM |
| Bicarbonate Alkalinity as CaCO3 | 449 | mg/L | SM2320-B | 5 | 2013-03-22 | 12:39:00 | CM |
| Carbonate Alkalinity as CaCO3 | <5 | mg/L | SM2320-B | 5 | 2013-03-22 | 12:39:00 | CM |
| pH | 7.14 | s. u. | SM4500-H | 0.01 | 2013-03-22 | 08:39:00 | CM |
| pH Temperature | 17.90 | °C | SM4500-H | 0.01 | 2013-03-22 | 08:39:00 | CM |
| Conductivity | 928 | µmhos/cm | SM2510 | 0.1 | 2013-03-22 | 08:40:00 | CM |
| Total Dissolved Solids | 536 | mg/L | SM2540-C | 30 | 2013-03-25 | 14:25:00 | CM |
| Chloride, Cl | 9 | mg/L | EPA 300.0 | 1 | 2013-03-26 | 19:21:00 | CM |
| Sulfate, SO4 | 39 | mg/L | EPA 300.0 | 1 | 2013-03-26 | 19:21:00 | CM |
| **METALS BY ICP** | | | | | | | |
| Calcium, Ca - Dissolved | 79.05 | mg/L | EPA 200.7 | 0.03 | 2013-03-27 | 15:29:00 | CM |
| Iron, Fe - Total | 1.06 | mg/L | EPA 200.7 | 0.05 | 2013-03-25 | 16:31:00 | CM |
| Iron, Fe - Dissolved | 0.11 | mg/L | EPA 200.7 | 0.03 | 2013-03-27 | 15:29:00 | CM |
| Magnesium, Mg - Dissolved | 27.82 | mg/L | EPA 200.7 | 0.01 | 2013-03-27 | 15:29:00 | CM |
| Manganese, Mn - Total | 0.093 | mg/L | EPA 200.7 | 0.002 | 2013-03-25 | 16:31:00 | CM |

Lab Supervisor

Domenic Ibanez
Lab Supervisor

SGS North America Inc. | Minerals Services Division
2035 North Airport Road Huntington UT 84528 t (435) 653-2311 f (435)-653-2436 www.sgs.com/minerals

Member of the SGS Group (Société Générale de Surveillance)

*This document is issued by the Company under its General Conditions of Service accessible at http://www.sgs.com/terms_and_conditions.htm. Attention is drawn to the limitation of liability, indemnification and jurisdiction issues defined therein.*

*Any holder of this document is advised that information contained hereon reflects the Company's findings at the time of its intervention only and within the limits of Client's instructions, if any. The Company's sole responsibility is to its Client and this document does not exonerate parties to a transaction from exercising all their rights and obligations under the transaction documents. Any unauthorized alteration, forgery or falsification of the content or appearance of this document is unlawful and offenders may be prosecuted to the fullest extent of the law*

# Analysis Report

April 01, 2013

**PACIFICORP**
FIELD OFFICE
PO BOX 1005
HUNTINGTON UT 84528



| | | | |
|---|---|---|---|
| Client Sample ID: | Deer Creek Mine | Sample ID By: | PacifiCorp |
| Date Sampled: | Mar 21, 2013 | Sample Taken By: | VBJ |
| Date Received: | Mar 21, 2013 | Time Received: | 1619 |
| Product Description: | WATER | Time Sampled: | 1130 |
| | | Location: | 11TH W #2 SEAL |
| | | Mine: | 4 |
| | | Field - pH: | 6.81 pH units |
| | | Field - Flow: | 5 GPM |
| | | Field - Temperature: | 15.9 DEG. C |

Comments: Dissolved Metals Filtered at Lab

**SGS Minerals Sample ID: 782-1318386-003**

| TESTS | RESULT | UNIT | METHOD | REPORTING LIMIT | ANALYZED DATE | TIME | ANALYST |
|---|---|---|---|---|---|---|---|
| **METALS BY ICP (continued)** | | | | | | | |
| Manganese, Mn - Dissolved | 0.093 | mg/L | EPA 200.7 | 0.002 | 2013-03-27 | 15:29:00 | CM |
| Potassium, K - Dissolved | 10.15 | mg/L | EPA 200.7 | 0.14 | 2013-03-27 | 15:29:00 | CM |
| Sodium, Na - Dissolved | 92.23 | mg/L | EPA 200.7 | 0.09 | 2013-03-27 | 15:29:00 | CM |

Lab Supervisor

Domenic Ibanez
Lab Supervisor

SGS North America Inc. | Minerals Services Division
2035 North Airport Road Huntington UT 84528 t (435) 653-2311 f (435)-653-2436 www.sgs.com/minerals

Member of the SGS Group (Société Générale de Surveillance)

*This document is issued by the Company under its General Conditions of Service accessible at http://www.sgs.com/terms_and_conditions.htm. Attention is drawn to the limitation of liability, indemnification and jurisdiction issues defined therein.*

*Any holder of this document is advised that information contained hereon reflects the Company's findings at the time of its intervention only and within the limits of Client's instructions, if any. The Company's sole responsibility is to its Client and this document does not exonerate parties to a transaction from exercising all their rights and obligations under the transaction documents. Any unauthorized alteration, forgery or falsification of the content or appearance of this document is unlawful and offenders may be prosecuted to the fullest extent of the law*

SGS

# Analysis Report

April 01, 2013

**PACIFICORP**
FIELD OFFICE
PO BOX 1005
HUNTINGTON UT 84528



| | | | |
|---|---|---|---|
| Client Sample ID: | Deer Creek Mine | Sample ID By: | PacifiCorp |
| Date Sampled: | Mar 21, 2013 | Sample Taken By: | VBJ |
| Date Received: | Mar 21, 2013 | Time Received: | 1619 |
| Product Description: | WATER | Time Sampled: | 1150 |
| | | Location: | 17 W #2 SEAL |
| | | Mine: | 4 |
| | | Field - pH: | 7.26 pH units |
| | | Field - Temperature: | 12.8 DEG. C |

Comments: Dissolved Metals Filtered at Lab

**SGS Minerals Sample ID: 782-1318386-004**

| TESTS | RESULT | UNIT | METHOD | REPORTING LIMIT | ANALYZED DATE | TIME | ANALYST |
|---|---|---|---|---|---|---|---|
| Hardness, mg equivalent CaCO3/L | 2 | mg/L | SM2340-B | 1 | 2013-03-28 | 12:00:00 | DI |
| Acidity | 14 | mg/L | D1067 | 5 | 2013-03-27 | 13:30:00 | CM |
| Anions | 10.22 | meq/L | SM1030E | 0 | 2013-03-28 | 12:00:00 | DI |
| Balance | 2.44 | % | SM1030E | -10 | 2013-03-28 | 12:00:00 | DI |
| Cations | 10.74 | meq/L | SM1030E | 0 | 2013-03-28 | 12:00:00 | DI |
| Alkalinity, mg CaCO3/L (pH 4.5) | 358 | mg/L | SM2320-B | 5 | 2013-03-22 | 12:39:00 | CM |
| Bicarbonate Alkalinity as CaCO3 | 358 | mg/L | SM2320-B | 5 | 2013-03-22 | 12:39:00 | CM |
| Carbonate Alkalinity as CaCO3 | <5 | mg/L | SM2320-B | 5 | 2013-03-22 | 12:39:00 | CM |
| pH | 7.47 | s. u. | SM4500-H | 0.01 | 2013-03-22 | 08:41:00 | CM |
| pH Temperature | 17.30 | °C | SM4500-H | 0.01 | 2013-03-22 | 08:41:00 | CM |
| Conductivity | 944 | µmhos/cm | SM2510 | 0.1 | 2013-03-22 | 08:40:00 | CM |
| Total Dissolved Solids | 562 | mg/L | SM2540-C | 30 | 2013-03-25 | 14:25:00 | CM |
| Chloride, Cl | 13 | mg/L | EPA 300.0 | 1 | 2013-03-26 | 19:21:00 | CM |
| Sulfate, SO4 | 130 | mg/L | EPA 300.0 | 1 | 2013-03-26 | 19:21:00 | CM |
| **METALS BY ICP** | | | | | | | |
| Calcium, Ca - Dissolved | 69.82 | mg/L | EPA 200.7 | 0.03 | 2013-03-27 | 15:29:00 | CM |
| Iron, Fe - Total | 3.63 | mg/L | EPA 200.7 | 0.05 | 2013-03-25 | 16:31:00 | CM |
| Iron, Fe - Dissolved | <0.03 | mg/L | EPA 200.7 | 0.03 | 2013-03-27 | 15:29:00 | CM |
| Magnesium, Mg - Dissolved | 46.56 | mg/L | EPA 200.7 | 0.01 | 2013-03-27 | 15:29:00 | CM |
| Manganese, Mn - Total | 0.035 | mg/L | EPA 200.7 | 0.002 | 2013-03-25 | 16:31:00 | CM |
| Manganese, Mn - Dissolved | 0.035 | mg/L | EPA 200.7 | 0.002 | 2013-03-27 | 15:29:00 | CM |

Lab Supervisor

Domenic Ibanez
Lab Supervisor

SGS North America Inc. | Minerals Services Division
2035 North Airport Road Huntington UT 84528 t (435) 653-2311 f (435)-653-2436 www.sgs.com/minerals

Member of the SGS Group (Société Générale de Surveillance)

*This document is issued by the Company under its General Conditions of Service accessible at http://www.sgs.com/terms_and_conditions.htm. Attention is drawn to the limitation of liability, indemnification and jurisdiction issues defined therein.*

*Any holder of this document is advised that information contained hereon reflects the Company's findings at the time of its intervention only and within the limits of Client's instructions, if any. The Company's sole responsibility is to its Client and this document does not exonerate parties to a transaction from exercising all their rights and obligations under the transaction documents. Any unauthorized alteration, forgery or falsification of the content or appearance of this document is unlawful and offenders may be prosecuted to the fullest extent of the law*

# Analysis Report

April 01, 2013

**PACIFICORP**
FIELD OFFICE
PO BOX 1005
HUNTINGTON UT 84528



| | | | |
|---|---|---|---|
| Client Sample ID: | Deer Creek Mine | Sample ID By: | PacifiCorp |
| Date Sampled: | Mar 21, 2013 | Sample Taken By: | VBJ |
| Date Received: | Mar 21, 2013 | Time Received: | 1619 |
| Product Description: | WATER | Time Sampled: | 1150 |
| | | Location: | 17 W #2 SEAL |
| | | Mine: | 4 |
| | | Field - pH: | 7.26 pH units |
| | | Field - Temperature: | 12.8 DEG. C |

Comments: Dissolved Metals Filtered at Lab

**SGS Minerals Sample ID: 782-1318386-004**

| TESTS | RESULT | UNIT | METHOD | REPORTING LIMIT | ANALYZED DATE | ANALYZED TIME | ANALYST |
|---|---|---|---|---|---|---|---|
| **METALS BY ICP (continued)** | | | | | | | |
| Potassium, K - Dissolved | 11.59 | mg/L | EPA 200.7 | 0.14 | 2013-03-27 | 15:29:00 | CM |
| Sodium, Na - Dissolved | 71.85 | mg/L | EPA 200.7 | 0.09 | 2013-03-27 | 15:29:00 | CM |

Lab Supervisor

Domenic Ibanez
Lab Supervisor

SGS North America Inc. | Minerals Services Division
2035 North Airport Road Huntington UT 84528 t (435) 653-2311 f (435)-653-2436 www.sgs.com/minerals

Member of the SGS Group (Société Générale de Surveillance)

*This document is issued by the Company under its General Conditions of Service accessible at http://www.sgs.com/terms_and_conditions.htm. Attention is drawn to the limitation of liability, indemnification and jurisdiction issues defined therein.*

*Any holder of this document is advised that information contained hereon reflects the Company's findings at the time of its intervention only and within the limits of Client's instructions, if any. The Company's sole responsibility is to its Client and this document does not exonerate parties to a transaction from exercising all their rights and obligations under the transaction documents. Any unauthorized alteration, forgery or falsification of the content or appearance of this document is unlawful and offenders may be prosecuted to the fullest extent of the law*

# Analysis Report

April 01, 2013

**PACIFICORP**
FIELD OFFICE
PO BOX 1005
HUNTINGTON UT 84528



| | | | |
|---|---|---|---|
| Client Sample ID: | Deer Creek Mine | Sample ID By: | PacifiCorp |
| Date Sampled: | Mar 21, 2013 | Sample Taken By: | VBJ |
| Date Received: | Mar 21, 2013 | Time Received: | 1619 |
| Product Description: | WATER | Time Sampled: | 1225 |
| | | Location: | 10 N XC-5 BOREHOLE |
| | | Mine: | 4 |
| | | Field - pH: | 7.06 pH units |
| | | Field - Flow: | 45.4 GPM |
| | | Field - Temperature: | 11.9 DEG. C |

Comments: Dissolved Metals Filtered at Lab

**SGS Minerals Sample ID: 782-1318386-005**

| TESTS | RESULT | UNIT | METHOD | REPORTING LIMIT | ANALYZED DATE | ANALYZED TIME | ANALYST |
|---|---|---|---|---|---|---|---|
| Hardness, mg equivalent CaCO3/L | 3 | mg/L | SM2340-B | 1 | 2013-03-28 | 12:00:00 | DI |
| Acidity | 15 | mg/L | D1067 | 5 | 2013-03-27 | 13:30:00 | CM |
| Anions | 12.88 | meq/L | SM1030E | 0 | 2013-03-28 | 12:00:00 | DI |
| Balance | 3.48 | % | SM1030E | -10 | 2013-03-28 | 12:00:00 | DI |
| Cations | 13.81 | meq/L | SM1030E | 0 | 2013-03-28 | 12:00:00 | DI |
| Alkalinity, mg CaCO3/L (pH 4.5) | 445 | mg/L | SM2320-B | 5 | 2013-03-27 | 10:45:00 | CM |
| Bicarbonate Alkalinity as CaCO3 | 445 | mg/L | SM2320-B | 5 | 2013-03-27 | 10:45:00 | CM |
| Carbonate Alkalinity as CaCO3 | <5 | mg/L | SM2320-B | 5 | 2013-03-27 | 10:45:00 | CM |
| pH | 7.42 | s. u. | SM4500-H | 0.01 | 2013-03-22 | 08:43:00 | CM |
| pH Temperature | 17.80 | °C | SM4500-H | 0.01 | 2013-03-22 | 08:43:00 | CM |
| Conductivity | 1202 | µmhos/cm | SM2510 | 0.1 | 2013-03-22 | 08:40:00 | CM |
| Total Dissolved Solids | 733 | mg/L | SM2540-C | 30 | 2013-03-25 | 14:25:00 | CM |
| Chloride, Cl | 8 | mg/L | EPA 300.0 | 1 | 2013-03-25 | 23:00:00 | CM |
| Sulfate, SO4 | 181 | mg/L | EPA 300.0 | 1 | 2013-03-25 | 23:00:00 | CM |
| **METALS BY ICP** | | | | | | | |
| Calcium, Ca - Dissolved | 73.80 | mg/L | EPA 200.7 | 0.03 | 2013-03-27 | 15:29:00 | CM |
| Iron, Fe - Total | <0.05 | mg/L | EPA 200.7 | 0.05 | 2013-03-25 | 16:31:00 | CM |
| Iron, Fe - Dissolved | <0.03 | mg/L | EPA 200.7 | 0.03 | 2013-03-27 | 15:29:00 | CM |
| Magnesium, Mg - Dissolved | 46.71 | mg/L | EPA 200.7 | 0.01 | 2013-03-27 | 15:29:00 | CM |
| Manganese, Mn - Total | <0.002 | mg/L | EPA 200.7 | 0.002 | 2013-03-25 | 16:31:00 | CM |

Lab Supervisor

Domenic Ibanez
Lab Supervisor

SGS North America Inc. | Minerals Services Division
2035 North Airport Road Huntington UT 84528 t (435) 653-2311 f (435)-653-2436 www.sgs.com/minerals

Member of the SGS Group (Société Générale de Surveillance)

*This document is issued by the Company under its General Conditions of Service accessible at http://www.sgs.com/terms_and_conditions.htm. Attention is drawn to the limitation of liability, indemnification and jurisdiction issues defined therein.*

*Any holder of this document is advised that information contained hereon reflects the Company's findings at the time of its intervention only and within the limits of Client's instructions, if any. The Company's sole responsibility is to its Client and this document does not exonerate parties to a transaction from exercising all their rights and obligations under the transaction documents. Any unauthorized alteration, forgery or falsification of the content or appearance of this document is unlawful and offenders may be prosecuted to the fullest extent of the law*

SGS

# Analysis Report

April 01, 2013

**PACIFICORP**
FIELD OFFICE
PO BOX 1005
HUNTINGTON UT 84528



| | | | |
|---|---|---|---|
| Client Sample ID: | Deer Creek Mine | Sample ID By: | PacifiCorp |
| Date Sampled: | Mar 21, 2013 | Sample Taken By: | VBJ |
| Date Received: | Mar 21, 2013 | Time Received: | 1619 |
| Product Description: | WATER | Time Sampled: | 1225 |
| | | Location: | 10 N XC-5 BOREHOLE |
| | | Mine: | 4 |
| | | Field - pH: | 7.06 pH units |
| | | Field - Flow: | 45.4 GPM |
| | | Field - Temperature: | 11.9 DEG. C |

Comments: Dissolved Metals Filtered at Lab

**SGS Minerals Sample ID: 782-1318386-005**

| TESTS | RESULT | UNIT | METHOD | REPORTING LIMIT | ANALYZED DATE | ANALYZED TIME | ANALYST |
|---|---|---|---|---|---|---|---|
| **METALS BY ICP (continued)** | | | | | | | |
| Manganese, Mn - Dissolved | <0.002 | mg/L | EPA 200.7 | 0.002 | 2013-03-27 | 15:29:00 | CM |
| Potassium, K - Dissolved | 11.10 | mg/L | EPA 200.7 | 0.14 | 2013-03-27 | 15:29:00 | CM |
| Sodium, Na - Dissolved | 138.06 | mg/L | EPA 200.7 | 0.09 | 2013-03-27 | 15:29:00 | CM |

Lab Supervisor

Domenic Ibanez
Lab Supervisor

SGS North America Inc. | Minerals Services Division
2035 North Airport Road Huntington UT 84528 t (435) 653-2311 f (435)-653-2436 www.sgs.com/minerals

Member of the SGS Group (Société Générale de Surveillance)

*This document is issued by the Company under its General Conditions of Service accessible at http://www.sgs.com/terms_and_conditions.htm. Attention is drawn to the limitation of liability, indemnification and jurisdiction issues defined therein.*

*Any holder of this document is advised that information contained hereon reflects the Company's findings at the time of its intervention only and within the limits of Client's instructions, if any. The Company's sole responsibility is to its Client and this document does not exonerate parties to a transaction from exercising all their rights and obligations under the transaction documents. Any unauthorized alteration, forgery or falsification of the content or appearance of this document is unlawful and offenders may be prosecuted to the fullest extent of the law*

# Analysis Report

May 07, 2013

**PACIFICORP**
FIELD OFFICE
PO BOX 1005
HUNTINGTON UT 84528



| | | | |
|---|---|---|---|
| Client Sample ID: | Deer Creek Mine | Sample ID By: | PacifiCorp |
| Date Sampled: | Apr 26, 2013 | Sample Taken By: | VBJ |
| Date Received: | Apr 26, 2013 | Time Received: | 1459 |
| Product Description: | WATER | Time Sampled: | 1240 |
| | | Location: | 11 W #2 Seal |
| | | Mine: | 4 |
| | | Field - pH: | 7.19 pH units |
| | | Field - Flow: | 5.5 GPM |
| | | Field - Temperature: | 15.8 DEG. C |

Comments: Dissolved Metals Filtered at Lab

**SGS Minerals Sample ID: 782-1318907-003**

| TESTS | RESULT | UNIT | METHOD | REPORTING LIMIT | ANALYZED DATE | ANALYZED TIME | ANALYST |
|---|---|---|---|---|---|---|---|
| Hardness, mg equivalent CaCO3/L | 297 | mg/L | SM2340-B | 1 | 2013-05-07 | 09:18:17 | AL |
| Acidity | 21 | mg/L | D1067 | 5 | 2013-05-01 | 13:45:00 | DI |
| Anions | 10.15 | meq/L | SM1030E | 0 | 2013-05-07 | 09:18:17 | AL |
| Balance | -0.55 | % | SM1030E | -10 | 2013-05-07 | 09:18:17 | AL |
| Cations | 10.04 | meq/L | SM1030E | 0 | 2013-05-07 | 09:18:17 | AL |
| Alkalinity, mg CaCO3/L (pH 4.5) | 459 | mg/L | SM2320-B | 5 | 2013-04-30 | 15:29:00 | DI |
| Bicarbonate Alkalinity as CaCO3 | 459 | mg/L | SM2320-B | 5 | 2013-04-30 | 15:29:00 | DI |
| Carbonate Alkalinity as CaCO3 | <5 | mg/L | SM2320-B | 5 | 2013-04-30 | 15:29:00 | DI |
| pH | 7.48 | s. u. | SM4500-H | 0.01 | 2013-04-26 | 15:27:00 | DI |
| pH Temperature | 14.30 | °C | SM4500-H | 0.01 | 2013-04-26 | 15:27:00 | DI |
| Conductivity | 905 | µmhos/cm | SM2510 | 0.1 | 2013-04-26 | 15:30:00 | DI |
| Total Dissolved Solids | 525 | mg/L | SM2540-C | 30 | 2013-05-02 | 13:30:00 | CM |
| Chloride, Cl | 8 | mg/L | EPA 300.0 | 1 | 2013-05-06 | 19:05:00 | AL |
| Sulfate, SO4 | 36 | mg/L | EPA 300.0 | 1 | 2013-05-06 | 19:05:00 | AL |
| **METALS BY ICP** | | | | | | | |
| Calcium, Ca - Dissolved | 76.05 | mg/L | EPA 200.7 | 0.03 | 2013-04-30 | 13:08:00 | AL |
| Iron, Fe - Total | 0.54 | mg/L | EPA 200.7 | 0.05 | 2013-05-02 | 12:47:00 | AL |
| Iron, Fe - Dissolved | <0.03 | mg/L | EPA 200.7 | 0.03 | 2013-04-30 | 13:08:00 | AL |
| Magnesium, Mg - Dissolved | 26.12 | mg/L | EPA 200.7 | 0.01 | 2013-04-30 | 13:08:00 | AL |
| Manganese, Mn - Total | 0.078 | mg/L | EPA 200.7 | 0.002 | 2013-05-02 | 12:47:00 | AL |

Lab Supervisor

Domenic Ibanez
Lab Supervisor

SGS North America Inc. | Minerals Services Division
2035 North Airport Road Huntington UT 84528 t (435) 653-2311 f (435)-653-2436 www.sgs.com/minerals

Member of the SGS Group (Société Générale de Surveillance)

*This document is issued by the Company under its General Conditions of Service accessible at http://www.sgs.com/terms_and_conditions.htm. Attention is drawn to the limitation of liability, indemnification and jurisdiction issues defined therein.*

*Any holder of this document is advised that information contained hereon reflects the Company's findings at the time of its intervention only and within the limits of Client's instructions, if any. The Company's sole responsibility is to its Client and this document does not exonerate parties to a transaction from exercising all their rights and obligations under the transaction documents. Any unauthorized alteration, forgery or falsification of the content or appearance of this document is unlawful and offenders may be prosecuted to the fullest extent of the law*

# Analysis Report

May 07, 2013

**PACIFICORP**
FIELD OFFICE
PO BOX 1005
HUNTINGTON UT 84528



| | | | |
|---|---|---|---|
| Client Sample ID: | Deer Creek Mine | Sample ID By: | PacifiCorp |
| Date Sampled: | Apr 26, 2013 | Sample Taken By: | VBJ |
| Date Received: | Apr 26, 2013 | Time Received: | 1459 |
| Product Description: | WATER | Time Sampled: | 1240 |
| | | Location: | 11 W #2 Seal |
| | | Mine: | 4 |
| | | Field - pH: | 7.19 pH units |
| | | Field - Flow: | 5.5 GPM |
| | | Field - Temperature: | 15.8 DEG. C |

Comments: Dissolved Metals Filtered at Lab

**SGS Minerals Sample ID: 782-1318907-003**

| TESTS | RESULT | UNIT | METHOD | REPORTING LIMIT | ANALYZED DATE | TIME | ANALYST |
|---|---|---|---|---|---|---|---|
| **METALS BY ICP (continued)** | | | | | | | |
| Manganese, Mn - Dissolved | 0.078 | mg/L | EPA 200.7 | 0.002 | 2013-04-30 | 13:08:00 | AL |
| Potassium, K - Dissolved | 9.97 | mg/L | EPA 200.7 | 0.14 | 2013-04-30 | 13:08:00 | AL |
| Sodium, Na - Dissolved | 88.40 | mg/L | EPA 200.7 | 0.09 | 2013-04-30 | 13:08:00 | AL |

Lab Supervisor

Domenic Ibanez
Lab Supervisor

SGS North America Inc. | Minerals Services Division
2035 North Airport Road Huntington UT 84528 t (435) 653-2311 f (435)-653-2436 www.sgs.com/minerals

Member of the SGS Group (Société Générale de Surveillance)

*This document is issued by the Company under its General Conditions of Service accessible at http://www.sgs.com/terms_and_conditions.htm. Attention is drawn to the limitation of liability, indemnification and jurisdiction issues defined therein.*

*Any holder of this document is advised that information contained hereon reflects the Company's findings at the time of its intervention only and within the limits of Client's instructions, if any. The Company's sole responsibility is to its Client and this document does not exonerate parties to a transaction from exercising all their rights and obligations under the transaction documents. Any unauthorized alteration, forgery or falsification of the content or appearance of this document is unlawful and offenders may be prosecuted to the fullest extent of the law*

SGS

# Analysis Report

May 07, 2013

**PACIFICORP**
FIELD OFFICE
PO BOX 1005
HUNTINGTON UT 84528



| | | | |
|---|---|---|---|
| Client Sample ID: | Deer Creek Mine | Sample ID By: | PacifiCorp |
| Date Sampled: | Apr 26, 2013 | Sample Taken By: | VBJ |
| Date Received: | Apr 26, 2013 | Time Received: | 1459 |
| Product Description: | WATER | Time Sampled: | 1020 |
| | | Location: | 17 W #2 Seal |
| | | Mine: | 4 |
| | | Field - pH: | 7.21 pH units |
| | | Field - Temperature: | 12.8 DEG. C |

Comments: Dissolved Metals Filtered at Lab

**SGS Minerals Sample ID: 782-1318907-001**

| TESTS | RESULT | UNIT | METHOD | REPORTING LIMIT | ANALYZED DATE | TIME | ANALYST |
|---|---|---|---|---|---|---|---|
| Hardness, mg equivalent CaCO3/L | 359 | mg/L | SM2340-B | 1 | 2013-05-07 | 09:18:17 | AL |
| Acidity | 12 | mg/L | D1067 | 5 | 2013-05-01 | 13:45:00 | DI |
| Anions | 10.10 | meq/L | SM1030E | 0 | 2013-05-07 | 09:18:17 | AL |
| Balance | 1.22 | % | SM1030E | -10 | 2013-05-07 | 09:18:17 | AL |
| Cations | 10.35 | meq/L | SM1030E | 0 | 2013-05-07 | 09:18:17 | AL |
| Alkalinity, mg CaCO3/L (pH 4.5) | 367 | mg/L | SM2320-B | 5 | 2013-04-30 | 15:29:00 | DI |
| Bicarbonate Alkalinity as CaCO3 | 367 | mg/L | SM2320-B | 5 | 2013-04-30 | 15:29:00 | DI |
| Carbonate Alkalinity as CaCO3 | <5 | mg/L | SM2320-B | 5 | 2013-04-30 | 15:29:00 | DI |
| pH | 7.40 | s. u. | SM4500-H | 0.01 | 2013-04-26 | 15:23:00 | DI |
| pH Temperature | 9.20 | °C | SM4500-H | 0.01 | 2013-04-26 | 15:23:00 | DI |
| Conductivity | 864 | µmhos/cm | SM2510 | 0.1 | 2013-04-26 | 15:30:00 | DI |
| Total Dissolved Solids | 551 | mg/L | SM2540-C | 30 | 2013-05-02 | 13:30:00 | CM |
| Chloride, Cl | 13 | mg/L | EPA 300.0 | 1 | 2013-04-30 | 20:47:00 | AL |
| Sulfate, SO4 | 133 | mg/L | EPA 300.0 | 1 | 2013-04-30 | 20:47:00 | AL |
| **METALS BY ICP** | | | | | | | |
| Calcium, Ca - Dissolved | 68.95 | mg/L | EPA 200.7 | 0.03 | 2013-04-30 | 13:08:00 | AL |
| Iron, Fe - Total | 4.02 | mg/L | EPA 200.7 | 0.05 | 2013-05-02 | 12:47:00 | AL |
| Iron, Fe - Dissolved | <0.03 | mg/L | EPA 200.7 | 0.03 | 2013-04-30 | 13:08:00 | AL |
| Magnesium, Mg - Dissolved | 45.30 | mg/L | EPA 200.7 | 0.01 | 2013-04-30 | 13:08:00 | AL |
| Manganese, Mn - Total | 0.025 | mg/L | EPA 200.7 | 0.002 | 2013-05-02 | 12:47:00 | AL |
| Manganese, Mn - Dissolved | 0.024 | mg/L | EPA 200.7 | 0.002 | 2013-04-30 | 13:08:00 | AL |

Lab Supervisor

Domenic Ibanez
Lab Supervisor

SGS North America Inc. | Minerals Services Division
2035 North Airport Road Huntington UT 84528 t (435) 653-2311 f (435)-653-2436 www.sgs.com/minerals

Member of the SGS Group (Société Générale de Surveillance)

*This document is issued by the Company under its General Conditions of Service accessible at http://www.sgs.com/terms_and_conditions.htm. Attention is drawn to the limitation of liability, indemnification and jurisdiction issues defined therein.*

*Any holder of this document is advised that information contained hereon reflects the Company's findings at the time of its intervention only and within the limits of Client's instructions, if any. The Company's sole responsibility is to its Client and this document does not exonerate parties to a transaction from exercising all their rights and obligations under the transaction documents. Any unauthorized alteration, forgery or falsification of the content or appearance of this document is unlawful and offenders may be prosecuted to the fullest extent of the law*

# Analysis Report

May 07, 2013

**PACIFICORP**
FIELD OFFICE
PO BOX 1005
HUNTINGTON UT 84528



| | | | |
|---|---|---|---|
| Client Sample ID: | Deer Creek Mine | Sample ID By: | PacifiCorp |
| Date Sampled: | Apr 26, 2013 | Sample Taken By: | VBJ |
| Date Received: | Apr 26, 2013 | Time Received: | 1459 |
| Product Description: | WATER | Time Sampled: | 1020 |
| | | Location: | 17 W #2 Seal |
| | | Mine: | 4 |
| | | Field - pH: | 7.21 pH units |
| | | Field - Temperature: | 12.8 DEG. C |

Comments: Dissolved Metals Filtered at Lab

**SGS Minerals Sample ID: 782-1318907-001**

| TESTS | RESULT | UNIT | METHOD | REPORTING LIMIT | ANALYZED DATE | ANALYZED TIME | ANALYST |
|---|---|---|---|---|---|---|---|
| **METALS BY ICP (continued)** | | | | | | | |
| Potassium, K - Dissolved | 11.40 | mg/L | EPA 200.7 | 0.14 | 2013-04-30 | 13:08:00 | AL |
| Sodium, Na - Dissolved | 66.53 | mg/L | EPA 200.7 | 0.09 | 2013-04-30 | 13:08:00 | AL |

Lab Supervisor

Domenic Ibanez
Lab Supervisor

SGS North America Inc. | Minerals Services Division
2035 North Airport Road Huntington UT 84528 t (435) 653-2311 f (435)-653-2436 www.sgs.com/minerals

Member of the SGS Group (Société Générale de Surveillance)

*This document is issued by the Company under its General Conditions of Service accessible at http://www.sgs.com/terms_and_conditions.htm. Attention is drawn to the limitation of liability, indemnification and jurisdiction issues defined therein.*

*Any holder of this document is advised that information contained hereon reflects the Company's findings at the time of its intervention only and within the limits of Client's instructions, if any. The Company's sole responsibility is to its Client and this document does not exonerate parties to a transaction from exercising all their rights and obligations under the transaction documents. Any unauthorized alteration, forgery or falsification of the content or appearance of this document is unlawful and offenders may be prosecuted to the fullest extent of the law*

SGS

# Analysis Report

May 07, 2013

**PACIFICORP**
FIELD OFFICE
PO BOX 1005
HUNTINGTON UT 84528



| | | | |
|---|---|---|---|
| Client Sample ID: | Deer Creek Mine | Sample ID By: | PacifiCorp |
| Date Sampled: | Apr 26, 2013 | Sample Taken By: | VBJ |
| Date Received: | Apr 26, 2013 | Time Received: | 1459 |
| Product Description: | WATER | Time Sampled: | 1052 |
| | | Location: | 10N XC-5 Borehole |
| | | Mine: | 4 |
| | | Field - pH: | 7.27 pH units |
| | | Field - Flow: | 50 GPM |
| | | Field - Temperature: | 11.9 DEG. C |

Comments: Dissolved Metals Filtered at Lab

**SGS Minerals Sample ID: 782-1318907-002**

| TESTS | RESULT | UNIT | METHOD | REPORTING LIMIT | ANALYZED DATE | ANALYZED TIME | ANALYST |
|---|---|---|---|---|---|---|---|
| Hardness, mg equivalent CaCO3/L | 366 | mg/L | SM2340-B | 1 | 2013-05-07 | 09:18:17 | AL |
| Acidity | 26 | mg/L | D1067 | 5 | 2013-05-01 | 13:45:00 | DI |
| Anions | 13.41 | meq/L | SM1030E | 0 | 2013-05-07 | 09:18:17 | AL |
| Balance | -0.01 | % | SM1030E | -10 | 2013-05-07 | 09:18:17 | AL |
| Cations | 13.41 | meq/L | SM1030E | 0 | 2013-05-07 | 09:18:17 | AL |
| Alkalinity, mg CaCO3/L (pH 4.5) | 476 | mg/L | SM2320-B | 5 | 2013-04-30 | 15:29:00 | DI |
| Bicarbonate Alkalinity as CaCO3 | 476 | mg/L | SM2320-B | 5 | 2013-04-30 | 15:29:00 | DI |
| Carbonate Alkalinity as CaCO3 | <5 | mg/L | SM2320-B | 5 | 2013-04-30 | 15:29:00 | DI |
| pH | 7.46 | s. u. | SM4500-H | 0.01 | 2013-04-26 | 15:25:00 | DI |
| pH Temperature | 14.10 | °C | SM4500-H | 0.01 | 2013-04-26 | 15:25:00 | DI |
| Conductivity | 1160 | µmhos/cm | SM2510 | 0.1 | 2013-04-26 | 15:30:00 | DI |
| Total Dissolved Solids | 732 | mg/L | SM2540-C | 30 | 2013-05-02 | 13:30:00 | CM |
| Chloride, Cl | 6 | mg/L | EPA 300.0 | 1 | 2013-04-30 | 20:47:00 | AL |
| Sulfate, SO4 | 179 | mg/L | EPA 300.0 | 1 | 2013-05-06 | 19:05:00 | AL |
| **METALS BY ICP** | | | | | | | |
| Calcium, Ca - Dissolved | 72.10 | mg/L | EPA 200.7 | 0.03 | 2013-04-30 | 13:08:00 | AL |
| Iron, Fe - Total | <0.05 | mg/L | EPA 200.7 | 0.05 | 2013-05-02 | 12:47:00 | AL |
| Iron, Fe - Dissolved | <0.03 | mg/L | EPA 200.7 | 0.03 | 2013-04-30 | 13:08:00 | AL |
| Magnesium, Mg - Dissolved | 45.20 | mg/L | EPA 200.7 | 0.01 | 2013-04-30 | 13:08:00 | AL |
| Manganese, Mn - Total | <0.002 | mg/L | EPA 200.7 | 0.002 | 2013-05-02 | 12:47:00 | AL |

Lab Supervisor

Domenic Ibanez
Lab Supervisor

SGS North America Inc. | Minerals Services Division
2035 North Airport Road Huntington UT 84528 t (435) 653-2311 f (435)-653-2436 www.sgs.com/minerals

Member of the SGS Group (Société Générale de Surveillance)

*This document is issued by the Company under its General Conditions of Service accessible at http://www.sgs.com/terms_and_conditions.htm. Attention is drawn to the limitation of liability, indemnification and jurisdiction issues defined therein.*

*Any holder of this document is advised that information contained hereon reflects the Company's findings at the time of its intervention only and within the limits of Client's instructions, if any. The Company's sole responsibility is to its Client and this document does not exonerate parties to a transaction from exercising all their rights and obligations under the transaction documents. Any unauthorized alteration, forgery or falsification of the content or appearance of this document is unlawful and offenders may be prosecuted to the fullest extent of the law*

# Analysis Report

May 07, 2013

**PACIFICORP**
FIELD OFFICE
PO BOX 1005
HUNTINGTON UT 84528



| | | | |
|---|---|---|---|
| Client Sample ID: | Deer Creek Mine | Sample ID By: | PacifiCorp |
| Date Sampled: | Apr 26, 2013 | Sample Taken By: | VBJ |
| Date Received: | Apr 26, 2013 | Time Received: | 1459 |
| Product Description: | WATER | Time Sampled: | 1052 |
| | | Location: | 10N XC-5 Borehole |
| | | Mine: | 4 |
| | | Field - pH: | 7.27 pH units |
| | | Field - Flow: | 50 GPM |
| | | Field - Temperature: | 11.9 DEG. C |

Comments: Dissolved Metals Filtered at Lab

**SGS Minerals Sample ID: 782-1318907-002**

| TESTS | RESULT | UNIT | METHOD | REPORTING LIMIT | ANALYZED DATE | ANALYZED TIME | ANALYST |
|---|---|---|---|---|---|---|---|
| **METALS BY ICP (continued)** | | | | | | | |
| Manganese, Mn - Dissolved | <0.002 | mg/L | EPA 200.7 | 0.002 | 2013-04-30 | 13:08:00 | AL |
| Potassium, K - Dissolved | 11.36 | mg/L | EPA 200.7 | 0.14 | 2013-04-30 | 13:08:00 | AL |
| Sodium, Na - Dissolved | 133.43 | mg/L | EPA 200.7 | 0.09 | 2013-04-30 | 13:08:00 | AL |

Lab Supervisor

Domenic Ibanez
Lab Supervisor

SGS North America Inc. | Minerals Services Division
2035 North Airport Road Huntington UT 84528 t (435) 653-2311 f (435)-653-2436 www.sgs.com/minerals

Member of the SGS Group (Société Générale de Surveillance)

*This document is issued by the Company under its General Conditions of Service accessible at http://www.sgs.com/terms_and_conditions.htm. Attention is drawn to the limitation of liability, indemnification and jurisdiction issues defined therein.*

*Any holder of this document is advised that information contained hereon reflects the Company's findings at the time of its intervention only and within the limits of Client's instructions, if any. The Company's sole responsibility is to its Client and this document does not exonerate parties to a transaction from exercising all their rights and obligations under the transaction documents. Any unauthorized alteration, forgery or falsification of the content or appearance of this document is unlawful and offenders may be prosecuted to the fullest extent of the law*

SGS

# Analysis Report

May 31, 2013

**PACIFICORP**
FIELD OFFICE
PO BOX 1005
HUNTINGTON UT 84528



| | | | |
|---|---|---|---|
| Client Sample ID: | Deer Creek Mine | Sample ID By: | PacifiCorp |
| Date Sampled: | May 21, 2013 | Sample Taken By: | VBJ |
| Date Received: | May 21, 2013 | Time Received: | 1536 |
| Product Description: | WATER | Time Sampled: | 1140 |
| | | Location: | 11TH W #2 SEAL |
| | | Mine: | 4 |
| | | Field - pH: | 7.04 pH units |
| | | Field - Flow: | 5 GPM |
| | | Field - Temperature: | 16 DEG. C |

Comments: Dissolved Metals Filtered at Lab

**SGS Minerals Sample ID: 782-1319309-001**

| TESTS | RESULT | UNIT | METHOD | REPORTING LIMIT | ANALYZED DATE | ANALYZED TIME | ANALYST |
|---|---|---|---|---|---|---|---|
| Hardness, mg equivalent CaCO3/L | 302 | mg/L | SM2340-B | 1 | 2013-05-29 | 10:49:35 | CM |
| Acidity | 47 | mg/L | D1067 | 5 | 2013-05-23 | 12:05:00 | AL |
| Anions | 10.09 | meq/L | SM1030E | 0 | 2013-05-29 | 10:49:35 | CM |
| Balance | 1.08 | % | SM1030E | -10 | 2013-05-29 | 10:49:35 | CM |
| Cations | 10.31 | meq/L | SM1030E | 0 | 2013-05-29 | 10:49:35 | CM |
| Alkalinity, mg CaCO3/L (pH 4.5) | 453 | mg/L | SM2320-B | 5 | 2013-05-23 | 08:30:00 | AL |
| Bicarbonate Alkalinity as CaCO3 | 453 | mg/L | SM2320-B | 5 | 2013-05-23 | 08:30:00 | AL |
| Carbonate Alkalinity as CaCO3 | <5 | mg/L | SM2320-B | 5 | 2013-05-23 | 08:30:00 | AL |
| pH | 7.18 | s. u. | SM4500-H | 0.01 | 2013-05-22 | 07:57:00 | AL |
| pH Temperature | 21.20 | °C | SM4500-H | 0.01 | 2013-05-22 | 07:57:00 | AL |
| Conductivity | 933 | µmhos/cm | SM2510 | 0.1 | 2013-05-22 | 07:40:00 | AL |
| Total Dissolved Solids | 539 | mg/L | SM2540-C | 30 | 2013-05-21 | 15:45:00 | AL |
| Chloride, Cl | 9 | mg/L | EPA 300.0 | 1 | 2013-05-23 | 18:53:00 | CM |
| Sulfate, SO4 | 38 | mg/L | EPA 300.0 | 1 | 2013-05-23 | 18:53:00 | CM |
| **METALS BY ICP** | | | | | | | |
| Calcium, Ca - Dissolved | 77.52 | mg/L | EPA 200.7 | 0.03 | 2013-05-22 | 12:43:00 | AL |
| Iron, Fe - Total | 1.44 | mg/L | EPA 200.7 | 0.05 | 2013-05-22 | 15:54:00 | AL |
| Iron, Fe - Dissolved | <0.03 | mg/L | EPA 200.7 | 0.03 | 2013-05-22 | 12:43:00 | AL |
| Magnesium, Mg - Dissolved | 26.40 | mg/L | EPA 200.7 | 0.01 | 2013-05-22 | 12:43:00 | AL |
| Manganese, Mn - Total | 0.093 | mg/L | EPA 200.7 | 0.002 | 2013-05-22 | 15:54:00 | AL |

Lab Supervisor

Domenic Ibanez
Lab Supervisor

SGS North America Inc. | Minerals Services Division
2035 North Airport Road Huntington UT 84528 t (435) 653-2311 f (435)-653-2436 www.sgs.com/minerals

Member of the SGS Group (Société Générale de Surveillance)

*This document is issued by the Company under its General Conditions of Service accessible at http://www.sgs.com/terms_and_conditions.htm. Attention is drawn to the limitation of liability, indemnification and jurisdiction issues defined therein.*

*Any holder of this document is advised that information contained hereon reflects the Company's findings at the time of its intervention only and within the limits of Client's instructions, if any. The Company's sole responsibility is to its Client and this document does not exonerate parties to a transaction from exercising all their rights and obligations under the transaction documents. Any unauthorized alteration, forgery or falsification of the content or appearance of this document is unlawful and offenders may be prosecuted to the fullest extent of the law*

SGS

# Analysis Report

May 31, 2013

**PACIFICORP**
FIELD OFFICE
PO BOX 1005
HUNTINGTON UT 84528



| | | | |
|---|---|---|---|
| Client Sample ID: | Deer Creek Mine | Sample ID By: | PacifiCorp |
| Date Sampled: | May 21, 2013 | Sample Taken By: | VBJ |
| Date Received: | May 21, 2013 | Time Received: | 1536 |
| Product Description: | WATER | Time Sampled: | 1140 |
| | | Location: | 11TH W #2 SEAL |
| | | Mine: | 4 |
| | | Field - pH: | 7.04 pH units |
| | | Field - Flow: | 5 GPM |
| | | Field - Temperature: | 16 DEG. C |

Comments: Dissolved Metals Filtered at Lab

**SGS Minerals Sample ID: 782-1319309-001**

| TESTS | RESULT | UNIT | METHOD | REPORTING LIMIT | ANALYZED DATE | ANALYZED TIME | ANALYST |
|---|---|---|---|---|---|---|---|
| **METALS BY ICP (continued)** | | | | | | | |
| Manganese, Mn - Dissolved | 0.093 | mg/L | EPA 200.7 | 0.002 | 2013-05-22 | 12:43:00 | AL |
| Potassium, K - Dissolved | 10.03 | mg/L | EPA 200.7 | 0.14 | 2013-05-22 | 12:43:00 | AL |
| Sodium, Na - Dissolved | 92.37 | mg/L | EPA 200.7 | 0.09 | 2013-05-22 | 12:43:00 | AL |

Lab Supervisor

Domenic Ibanez
Lab Supervisor

SGS North America Inc. | Minerals Services Division
2035 North Airport Road Huntington UT 84528 t (435) 653-2311 f (435)-653-2436 www.sgs.com/minerals

Member of the SGS Group (Société Générale de Surveillance)

*This document is issued by the Company under its General Conditions of Service accessible at http://www.sgs.com/terms_and_conditions.htm. Attention is drawn to the limitation of liability, indemnification and jurisdiction issues defined therein.*

*Any holder of this document is advised that information contained hereon reflects the Company's findings at the time of its intervention only and within the limits of Client's instructions, if any. The Company's sole responsibility is to its Client and this document does not exonerate parties to a transaction from exercising all their rights and obligations under the transaction documents. Any unauthorized alteration, forgery or falsification of the content or appearance of this document is unlawful and offenders may be prosecuted to the fullest extent of the law*

SGS

# Analysis Report

May 31, 2013

**PACIFICORP**
FIELD OFFICE
PO BOX 1005
HUNTINGTON UT 84528



| | | | |
|---|---|---|---|
| Client Sample ID: | Deer Creek Mine | Sample ID By: | PacifiCorp |
| Date Sampled: | May 21, 2013 | Sample Taken By: | VBJ |
| Date Received: | May 21, 2013 | Time Received: | 1536 |
| Product Description: | WATER | Time Sampled: | 1210 |
| | | Location: | 17 W #2 SEAL |
| | | Mine: | 4 |
| | | Field - pH: | 7.25 pH units |
| | | Field - Temperature: | 12.6 DEG. C |

Comments: Dissolved Metals Filtered at Lab

**SGS Minerals Sample ID: 782-1319309-002**

| TESTS | RESULT | UNIT | METHOD | REPORTING LIMIT | ANALYZED DATE | TIME | ANALYST |
|---|---|---|---|---|---|---|---|
| Hardness, mg equivalent CaCO3/L | 344 | mg/L | SM2340-B | 1 | 2013-05-29 | 10:49:35 | CM |
| Acidity | 26 | mg/L | D1067 | 5 | 2013-05-23 | 12:05:00 | AL |
| Anions | 10.37 | meq/L | SM1030E | 0 | 2013-05-29 | 10:49:35 | CM |
| Balance | -1.02 | % | SM1030E | -10 | 2013-05-29 | 10:49:35 | CM |
| Cations | 10.16 | meq/L | SM1030E | 0 | 2013-05-29 | 10:49:35 | CM |
| Alkalinity, mg CaCO3/L (pH 4.5) | 365 | mg/L | SM2320-B | 5 | 2013-05-23 | 08:30:00 | AL |
| Bicarbonate Alkalinity as CaCO3 | 365 | mg/L | SM2320-B | 5 | 2013-05-23 | 08:30:00 | AL |
| Carbonate Alkalinity as CaCO3 | <5 | mg/L | SM2320-B | 5 | 2013-05-23 | 08:30:00 | AL |
| pH | 7.34 | s. u. | SM4500-H | 0.01 | 2013-05-22 | 07:59:00 | AL |
| pH Temperature | 21.00 | °C | SM4500-H | 0.01 | 2013-05-22 | 07:59:00 | AL |
| Conductivity | 944 | µmhos/cm | SM2510 | 0.1 | 2013-05-22 | 07:40:00 | AL |
| Total Dissolved Solids | 557 | mg/L | SM2540-C | 30 | 2013-05-21 | 15:45:00 | AL |
| Chloride, Cl | 12 | mg/L | EPA 300.0 | 1 | 2013-05-23 | 18:53:00 | CM |
| Sulfate, SO4 | 132 | mg/L | EPA 300.0 | 1 | 2013-05-23 | 18:53:00 | CM |
| **METALS BY ICP** | | | | | | | |
| Calcium, Ca - Dissolved | 66.37 | mg/L | EPA 200.7 | 0.03 | 2013-05-22 | 12:43:00 | AL |
| Iron, Fe - Total | 3.17 | mg/L | EPA 200.7 | 0.05 | 2013-05-22 | 15:54:00 | AL |
| Iron, Fe - Dissolved | <0.03 | mg/L | EPA 200.7 | 0.03 | 2013-05-22 | 12:43:00 | AL |
| Magnesium, Mg - Dissolved | 43.29 | mg/L | EPA 200.7 | 0.01 | 2013-05-22 | 12:43:00 | AL |
| Manganese, Mn - Total | 0.024 | mg/L | EPA 200.7 | 0.002 | 2013-05-22 | 15:54:00 | AL |
| Manganese, Mn - Dissolved | 0.024 | mg/L | EPA 200.7 | 0.002 | 2013-05-22 | 12:43:00 | AL |

Lab Supervisor

Domenic Ibanez
Lab Supervisor

SGS North America Inc. | Minerals Services Division
2035 North Airport Road Huntington UT 84528 t (435) 653-2311 f (435)-653-2436 www.sgs.com/minerals

Member of the SGS Group (Société Générale de Surveillance)

*This document is issued by the Company under its General Conditions of Service accessible at http://www.sgs.com/terms_and_conditions.htm. Attention is drawn to the limitation of liability, indemnification and jurisdiction issues defined therein.*

*Any holder of this document is advised that information contained hereon reflects the Company's findings at the time of its intervention only and within the limits of Client's instructions, if any. The Company's sole responsibility is to its Client and this document does not exonerate parties to a transaction from exercising all their rights and obligations under the transaction documents. Any unauthorized alteration, forgery or falsification of the content or appearance of this document is unlawful and offenders may be prosecuted to the fullest extent of the law*

SGS

# Analysis Report

May 31, 2013

**PACIFICORP**
FIELD OFFICE
PO BOX 1005
HUNTINGTON UT 84528



| | | | |
|---|---|---|---|
| Client Sample ID: | Deer Creek Mine | Sample ID By: | PacifiCorp |
| Date Sampled: | May 21, 2013 | Sample Taken By: | VBJ |
| Date Received: | May 21, 2013 | Time Received: | 1536 |
| Product Description: | WATER | Time Sampled: | 1210 |
| | | Location: | 17 W #2 SEAL |
| | | Mine: | 4 |
| | | Field - pH: | 7.25 pH units |
| | | Field - Temperature: | 12.6 DEG. C |

Comments: Dissolved Metals Filtered at Lab

**SGS Minerals Sample ID: 782-1319309-002**

| TESTS | RESULT | UNIT | METHOD | REPORTING LIMIT | ANALYZED DATE | ANALYZED TIME | ANALYST |
|---|---|---|---|---|---|---|---|
| **METALS BY ICP (continued)** | | | | | | | |
| Potassium, K - Dissolved | 11.13 | mg/L | EPA 200.7 | 0.14 | 2013-05-22 | 12:43:00 | AL |
| Sodium, Na - Dissolved | 69.08 | mg/L | EPA 200.7 | 0.09 | 2013-05-22 | 12:43:00 | AL |

Lab Supervisor

Domenic Ibanez
Lab Supervisor

SGS North America Inc. | Minerals Services Division
2035 North Airport Road Huntington UT 84528 t (435) 653-2311 f (435)-653-2436 www.sgs.com/minerals

Member of the SGS Group (Société Générale de Surveillance)

*This document is issued by the Company under its General Conditions of Service accessible at http://www.sgs.com/terms_and_conditions.htm. Attention is drawn to the limitation of liability, indemnification and jurisdiction issues defined therein.*

*Any holder of this document is advised that information contained hereon reflects the Company's findings at the time of its intervention only and within the limits of Client's instructions, if any. The Company's sole responsibility is to its Client and this document does not exonerate parties to a transaction from exercising all their rights and obligations under the transaction documents. Any unauthorized alteration, forgery or falsification of the content or appearance of this document is unlawful and offenders may be prosecuted to the fullest extent of the law*

# Analysis Report

May 31, 2013

**PACIFICORP**
FIELD OFFICE
PO BOX 1005
HUNTINGTON UT 84528



| | | | |
|---|---|---|---|
| Client Sample ID: | Deer Creek Mine | Sample ID By: | PacifiCorp |
| Date Sampled: | May 21, 2013 | Sample Taken By: | VBJ |
| Date Received: | May 21, 2013 | Time Received: | 1536 |
| Product Description: | WATER | Time Sampled: | 1238 |
| | | Location: | 10N XC-5 BOREHOLE |
| | | Mine: | 4 |
| | | Field - pH: | 7.22 pH units |
| | | Field - Flow: | 50 GPM |
| | | Field - Temperature: | 11.7 DEG. C |

Comments: Dissolved Metals Filtered at Lab

**SGS Minerals Sample ID: 782-1319309-003**

| TESTS | RESULT | UNIT | METHOD | REPORTING LIMIT | ANALYZED DATE | ANALYZED TIME | ANALYST |
|---|---|---|---|---|---|---|---|
| Hardness, mg equivalent CaCO3/L | 348 | mg/L | SM2340-B | 1 | 2013-05-29 | 10:49:35 | CM |
| Acidity | 31 | mg/L | D1067 | 5 | 2013-05-23 | 12:05:00 | AL |
| Anions | 13.36 | meq/L | SM1030E | 0 | 2013-05-29 | 10:49:35 | CM |
| Balance | -1.29 | % | SM1030E | -10 | 2013-05-29 | 10:49:35 | CM |
| Cations | 13.02 | meq/L | SM1030E | 0 | 2013-05-29 | 10:49:35 | CM |
| Alkalinity, mg CaCO3/L (pH 4.5) | 467 | mg/L | SM2320-B | 5 | 2013-05-23 | 08:30:00 | AL |
| Bicarbonate Alkalinity as CaCO3 | 467 | mg/L | SM2320-B | 5 | 2013-05-23 | 08:30:00 | AL |
| Carbonate Alkalinity as CaCO3 | <5 | mg/L | SM2320-B | 5 | 2013-05-23 | 08:30:00 | AL |
| pH | 7.37 | s. u. | SM4500-H | 0.01 | 2013-05-22 | 08:01:00 | AL |
| pH Temperature | 21.10 | °C | SM4500-H | 0.01 | 2013-05-22 | 08:01:00 | AL |
| Conductivity | 1196 | µmhos/cm | SM2510 | 0.1 | 2013-05-22 | 07:40:00 | AL |
| Total Dissolved Solids | 736 | mg/L | SM2540-C | 30 | 2013-05-21 | 15:45:00 | AL |
| Chloride, Cl | 7 | mg/L | EPA 300.0 | 1 | 2013-05-23 | 18:53:00 | CM |
| Sulfate, SO4 | 183 | mg/L | EPA 300.0 | 1 | 2013-05-23 | 18:53:00 | CM |
| **METALS BY ICP** | | | | | | | |
| Calcium, Ca - Dissolved | 69.63 | mg/L | EPA 200.7 | 0.03 | 2013-05-22 | 12:43:00 | AL |
| Iron, Fe - Total | <0.05 | mg/L | EPA 200.7 | 0.05 | 2013-05-22 | 15:54:00 | AL |
| Iron, Fe - Dissolved | <0.03 | mg/L | EPA 200.7 | 0.03 | 2013-05-22 | 12:43:00 | AL |
| Magnesium, Mg - Dissolved | 42.33 | mg/L | EPA 200.7 | 0.01 | 2013-05-22 | 12:43:00 | AL |
| Manganese, Mn - Total | <0.002 | mg/L | EPA 200.7 | 0.002 | 2013-05-22 | 15:54:00 | AL |

Lab Supervisor

Domenic Ibanez
Lab Supervisor

SGS North America Inc. | Minerals Services Division
2035 North Airport Road Huntington UT 84528 t (435) 653-2311 f (435)-653-2436 www.sgs.com/minerals

Member of the SGS Group (Société Générale de Surveillance)

*This document is issued by the Company under its General Conditions of Service accessible at http://www.sgs.com/terms_and_conditions.htm. Attention is drawn to the limitation of liability, indemnification and jurisdiction issues defined therein.*

*Any holder of this document is advised that information contained hereon reflects the Company's findings at the time of its intervention only and within the limits of Client's instructions, if any. The Company's sole responsibility is to its Client and this document does not exonerate parties to a transaction from exercising all their rights and obligations under the transaction documents. Any unauthorized alteration, forgery or falsification of the content or appearance of this document is unlawful and offenders may be prosecuted to the fullest extent of the law*

SGS

# Analysis Report

May 31, 2013

**PACIFICORP**
FIELD OFFICE
PO BOX 1005
HUNTINGTON UT 84528



| | | | |
|---|---|---|---|
| Client Sample ID: | Deer Creek Mine | Sample ID By: | PacifiCorp |
| Date Sampled: | May 21, 2013 | Sample Taken By: | VBJ |
| Date Received: | May 21, 2013 | Time Received: | 1536 |
| Product Description: | WATER | Time Sampled: | 1238 |
| | | Location: | 10N XC-5 BOREHOLE |
| | | Mine: | 4 |
| | | Field - pH: | 7.22 pH units |
| | | Field - Flow: | 50 GPM |
| | | Field - Temperature: | 11.7 DEG. C |

Comments: Dissolved Metals Filtered at Lab

**SGS Minerals Sample ID: 782-1319309-003**

| TESTS | RESULT | UNIT | METHOD | REPORTING LIMIT | ANALYZED DATE | TIME | ANALYST |
|---|---|---|---|---|---|---|---|
| **METALS BY ICP (continued)** | | | | | | | |
| Manganese, Mn - Dissolved | <0.002 | mg/L | EPA 200.7 | 0.002 | 2013-05-22 | 12:43:00 | AL |
| Potassium, K - Dissolved | 10.85 | mg/L | EPA 200.7 | 0.14 | 2013-05-22 | 12:43:00 | AL |
| Sodium, Na - Dissolved | 132.98 | mg/L | EPA 200.7 | 0.09 | 2013-05-22 | 12:43:00 | AL |

Lab Supervisor

Domenic Ibanez
Lab Supervisor

SGS North America Inc. | Minerals Services Division
2035 North Airport Road Huntington UT 84528 t (435) 653-2311 f (435)-653-2436 www.sgs.com/minerals

Member of the SGS Group (Société Générale de Surveillance)

*This document is issued by the Company under its General Conditions of Service accessible at http://www.sgs.com/terms_and_conditions.htm. Attention is drawn to the limitation of liability, indemnification and jurisdiction issues defined therein.*

*Any holder of this document is advised that information contained hereon reflects the Company's findings at the time of its intervention only and within the limits of Client's instructions, if any. The Company's sole responsibility is to its Client and this document does not exonerate parties to a transaction from exercising all their rights and obligations under the transaction documents. Any unauthorized alteration, forgery or falsification of the content or appearance of this document is unlawful and offenders may be prosecuted to the fullest extent of the law*

# Analysis Report

July 10, 2013

**PACIFICORP**
FIELD OFFICE
PO BOX 1005
HUNTINGTON UT 84528



| | | | |
|---|---|---|---|
| Client Sample ID: | Deer Creek Mine | Sample ID By: | PacifiCorp |
| Date Sampled: | Jun 27, 2013 | Sample Taken By: | VBJ |
| Date Received: | Jun 27, 2013 | Time Received: | 1510 |
| Product Description: | WATER | Time Sampled: | 1115 |
| | | Location: | 11TH W #2 SEAL |
| | | Mine: | 4 |
| | | Field - pH: | 7.54 pH units |
| | | Field - Flow: | 5 GPM |
| | | Field - Temperature: | 14.6 DEG. C |

Comments: Dissolved Metals Filtered at Lab

**SGS Minerals Sample ID: 782-1319902-003**

| TESTS | RESULT | UNIT | METHOD | REPORTING LIMIT | ANALYZED DATE | TIME | ANALYST |
|---|---|---|---|---|---|---|---|
| Hardness, mg equivalent CaCO3/L | 299 | mg/L | SM2340-B | 1 | 2013-07-09 | 15:02:53 | AL |
| Acidity | 6 | mg/L | D1067 | 5 | 2013-07-09 | 12:30:00 | AL |
| Anions | 9.95 | meq/L | SM1030E | 0 | 2013-07-09 | 15:02:53 | AL |
| Balance | 0.88 | % | SM1030E | -10 | 2013-07-09 | 15:03:45 | AL |
| Cations | 10.13 | meq/L | SM1030E | 0 | 2013-07-09 | 15:03:45 | AL |
| Alkalinity, mg CaCO3/L (pH 4.5) | 450 | mg/L | SM2320-B | 5 | 2013-07-01 | 14:40:00 | AL |
| Bicarbonate Alkalinity as CaCO3 | 450 | mg/L | SM2320-B | 5 | 2013-07-01 | 14:40:00 | AL |
| Carbonate Alkalinity as CaCO3 | <5 | mg/L | SM2320-B | 5 | 2013-07-01 | 14:40:00 | AL |
| pH | 7.50 | | SM4500-H | 0.01 | 2013-06-28 | 07:51:00 | AL |
| pH Temperature | 20.60 | °C | SM4500-H | 0.01 | 2013-06-28 | 07:51:00 | AL |
| Conductivity | 911 | µmhos/cm | SM2510 | 0.1 | 2013-06-28 | 08:00:00 | AL |
| Total Dissolved Solids | 506 | mg/L | SM2540-C | 30 | 2013-07-02 | 13:05:00 | AL |
| Chloride, Cl | 8 | mg/L | EPA 300.0 | 1 | 2013-06-28 | 23:21:00 | AL |
| Sulfate, SO4 | 35 | mg/L | EPA 300.0 | 1 | 2013-06-28 | 23:21:00 | AL |
| **METALS BY ICP** | | | | | | | |
| Calcium, Ca - Dissolved | 76.55 | mg/L | EPA 200.7 | 0.03 | 2013-07-08 | 17:19:00 | CM |
| Iron, Fe - Total | 0.78 | mg/L | EPA 200.7 | 0.05 | 2013-07-02 | 17:14:00 | CM |
| Iron, Fe - Dissolved | <0.03 | mg/L | EPA 200.7 | 0.03 | 2013-07-08 | 17:19:00 | CM |
| Magnesium, Mg - Dissolved | 26.19 | mg/L | EPA 200.7 | 0.01 | 2013-07-08 | 17:19:00 | CM |
| Manganese, Mn - Total | 0.073 | mg/L | EPA 200.7 | 0.002 | 2013-07-02 | 17:14:00 | CM |

Lab Supervisor

Domenic Ibanez
Lab Supervisor

SGS North America Inc. | Minerals Services Division
2035 North Airport Road Huntington UT 84528 t (435) 653-2311 f (435)-653-2436 www.sgs.com/minerals

Member of the SGS Group (Société Générale de Surveillance)

*This document is issued by the Company under its General Conditions of Service accessible at http://www.sgs.com/terms_and_conditions.htm. Attention is drawn to the limitation of liability, indemnification and jurisdiction issues defined therein.*

*Any holder of this document is advised that information contained hereon reflects the Company's findings at the time of its intervention only and within the limits of Client's instructions, if any. The Company's sole responsibility is to its Client and this document does not exonerate parties to a transaction from exercising all their rights and obligations under the transaction documents. Any unauthorized alteration, forgery or falsification of the content or appearance of this document is unlawful and offenders may be prosecuted to the fullest extent of the law*

SGS

# Analysis Report

July 10, 2013

**PACIFICORP**
FIELD OFFICE
PO BOX 1005
HUNTINGTON UT 84528



| | | | |
|---|---|---|---|
| Client Sample ID: | Deer Creek Mine | Sample ID By: | PacifiCorp |
| Date Sampled: | Jun 27, 2013 | Sample Taken By: | VBJ |
| Date Received: | Jun 27, 2013 | Time Received: | 1510 |
| Product Description: | WATER | Time Sampled: | 1115 |
| | | Location: | 11TH W #2 SEAL |
| | | Mine: | 4 |
| | | Field - pH: | 7.54 pH units |
| | | Field - Flow: | 5 GPM |
| | | Field - Temperature: | 14.6 DEG. C |

Comments: Dissolved Metals Filtered at Lab

**SGS Minerals Sample ID: 782-1319902-003**

| TESTS | RESULT | UNIT | METHOD | REPORTING LIMIT | ANALYZED DATE | ANALYZED TIME | ANALYST |
|---|---|---|---|---|---|---|---|
| **METALS BY ICP (continued)** | | | | | | | |
| Manganese, Mn - Dissolved | 0.068 | mg/L | EPA 200.7 | 0.002 | 2013-07-08 | 17:19:00 | CM |
| Potassium, K - Dissolved | 9.86 | mg/L | EPA 200.7 | 0.14 | 2013-07-08 | 17:19:00 | CM |
| Sodium, Na - Dissolved | 89.69 | mg/L | EPA 200.7 | 0.09 | 2013-07-08 | 17:19:00 | CM |

Lab Supervisor

Domenic Ibanez
Lab Supervisor

SGS North America Inc. | Minerals Services Division
2035 North Airport Road Huntington UT 84528 t (435) 653-2311 f (435)-653-2436 www.sgs.com/minerals

Member of the SGS Group (Société Générale de Surveillance)

*This document is issued by the Company under its General Conditions of Service accessible at http://www.sgs.com/terms_and_conditions.htm. Attention is drawn to the limitation of liability, indemnification and jurisdiction issues defined therein.*

*Any holder of this document is advised that information contained hereon reflects the Company's findings at the time of its intervention only and within the limits of Client's instructions, if any. The Company's sole responsibility is to its Client and this document does not exonerate parties to a transaction from exercising all their rights and obligations under the transaction documents. Any unauthorized alteration, forgery or falsification of the content or appearance of this document is unlawful and offenders may be prosecuted to the fullest extent of the law*

SGS

# Analysis Report

July 10, 2013

**PACIFICORP**
FIELD OFFICE
PO BOX 1005
HUNTINGTON UT 84528



| | | | |
|---|---|---|---|
| Client Sample ID: | Deer Creek Mine | Sample ID By: | PacifiCorp |
| Date Sampled: | Jun 27, 2013 | Sample Taken By: | VBJ |
| Date Received: | Jun 27, 2013 | Time Received: | 1510 |
| Product Description: | WATER | Time Sampled: | 1140 |
| | | Location: | 17 W #2 SEAL |
| | | Mine: | 4 |
| | | Field - pH: | 7.29 pH units |
| | | Field - Temperature: | 10.9 DEG. C |

Comments: Dissolved Metals Filtered at Lab

**SGS Minerals Sample ID: 782-1319902-004**

| TESTS | RESULT | UNIT | METHOD | REPORTING LIMIT | ANALYZED DATE | ANALYZED TIME | ANALYST |
|---|---|---|---|---|---|---|---|
| Hardness, mg equivalent CaCO3/L | 358 | mg/L | SM2340-B | 1 | 2013-07-09 | 15:02:53 | AL |
| Acidity | 16 | mg/L | D1067 | 5 | 2013-07-09 | 12:30:00 | AL |
| Anions | 9.97 | meq/L | SM1030E | 0 | 2013-07-09 | 15:02:53 | AL |
| Balance | 1.85 | % | SM1030E | -10 | 2013-07-09 | 15:03:45 | AL |
| Cations | 10.34 | meq/L | SM1030E | 0 | 2013-07-09 | 15:03:45 | AL |
| Alkalinity, mg CaCO3/L (pH 4.5) | 348 | mg/L | SM2320-B | 5 | 2013-07-01 | 14:40:00 | AL |
| Bicarbonate Alkalinity as CaCO3 | 348 | mg/L | SM2320-B | 5 | 2013-07-01 | 14:40:00 | AL |
| Carbonate Alkalinity as CaCO3 | <5 | mg/L | SM2320-B | 5 | 2013-07-01 | 14:40:00 | AL |
| pH | 7.30 | | SM4500-H | 0.01 | 2013-06-28 | 07:53:00 | AL |
| pH Temperature | 20.60 | °C | SM4500-H | 0.01 | 2013-06-28 | 07:53:00 | AL |
| Conductivity | 923 | µmhos/cm | SM2510 | 0.1 | 2013-06-28 | 08:00:00 | AL |
| Total Dissolved Solids | 544 | mg/L | SM2540-C | 30 | 2013-07-02 | 13:05:00 | AL |
| Chloride, Cl | 12 | mg/L | EPA 300.0 | 1 | 2013-06-28 | 23:21:00 | AL |
| Sulfate, SO4 | 128 | mg/L | EPA 300.0 | 1 | 2013-06-28 | 23:21:00 | AL |
| **METALS BY ICP** | | | | | | | |
| Calcium, Ca - Dissolved | 68.67 | mg/L | EPA 200.7 | 0.03 | 2013-07-08 | 17:19:00 | CM |
| Iron, Fe - Total | 3.10 | mg/L | EPA 200.7 | 0.05 | 2013-07-02 | 17:14:00 | CM |
| Iron, Fe - Dissolved | 0.14 | mg/L | EPA 200.7 | 0.03 | 2013-07-08 | 17:19:00 | CM |
| Magnesium, Mg - Dissolved | 45.27 | mg/L | EPA 200.7 | 0.01 | 2013-07-08 | 17:19:00 | CM |
| Manganese, Mn - Total | 0.025 | mg/L | EPA 200.7 | 0.002 | 2013-07-02 | 17:14:00 | CM |
| Manganese, Mn - Dissolved | 0.025 | mg/L | EPA 200.7 | 0.002 | 2013-07-08 | 17:19:00 | CM |

Lab Supervisor

Domenic Ibanez
Lab Supervisor

SGS North America Inc. | Minerals Services Division
2035 North Airport Road Huntington UT 84528 t (435) 653-2311 f (435)-653-2436 www.sgs.com/minerals

Member of the SGS Group (Société Générale de Surveillance)

*This document is issued by the Company under its General Conditions of Service accessible at http://www.sgs.com/terms_and_conditions.htm. Attention is drawn to the limitation of liability, indemnification and jurisdiction issues defined therein.*

*Any holder of this document is advised that information contained hereon reflects the Company's findings at the time of its intervention only and within the limits of Client's instructions, if any. The Company's sole responsibility is to its Client and this document does not exonerate parties to a transaction from exercising all their rights and obligations under the transaction documents. Any unauthorized alteration, forgery or falsification of the content or appearance of this document is unlawful and offenders may be prosecuted to the fullest extent of the law*

SGS

# Analysis Report

July 10, 2013

**PACIFICORP**
FIELD OFFICE
PO BOX 1005
HUNTINGTON UT 84528



| | | | |
|---|---|---|---|
| Client Sample ID: | Deer Creek Mine | Sample ID By: | PacifiCorp |
| Date Sampled: | Jun 27, 2013 | Sample Taken By: | VBJ |
| Date Received: | Jun 27, 2013 | Time Received: | 1510 |
| Product Description: | WATER | Time Sampled: | 1140 |
| | | Location: | 17 W #2 SEAL |
| | | Mine: | 4 |
| | | Field - pH: | 7.29 pH units |
| | | Field - Temperature: | 10.9 DEG. C |

Comments: Dissolved Metals Filtered at Lab

**SGS Minerals Sample ID: 782-1319902-004**

| TESTS | RESULT | UNIT | METHOD | REPORTING LIMIT | ANALYZED DATE | ANALYZED TIME | ANALYST |
|---|---|---|---|---|---|---|---|
| **METALS BY ICP (continued)** | | | | | | | |
| Potassium, K - Dissolved | 11.23 | mg/L | EPA 200.7 | 0.14 | 2013-07-08 | 17:19:00 | CM |
| Sodium, Na - Dissolved | 66.82 | mg/L | EPA 200.7 | 0.09 | 2013-07-08 | 17:19:00 | CM |

Lab Supervisor

Domenic Ibanez
Lab Supervisor

SGS North America Inc. | Minerals Services Division
2035 North Airport Road Huntington UT 84528 t (435) 653-2311 f (435)-653-2436 www.sgs.com/minerals

Member of the SGS Group (Société Générale de Surveillance)

*This document is issued by the Company under its General Conditions of Service accessible at http://www.sgs.com/terms_and_conditions.htm. Attention is drawn to the limitation of liability, indemnification and jurisdiction issues defined therein.*

*Any holder of this document is advised that information contained hereon reflects the Company's findings at the time of its intervention only and within the limits of Client's instructions, if any. The Company's sole responsibility is to its Client and this document does not exonerate parties to a transaction from exercising all their rights and obligations under the transaction documents. Any unauthorized alteration, forgery or falsification of the content or appearance of this document is unlawful and offenders may be prosecuted to the fullest extent of the law*

SGS

# Analysis Report

July 10, 2013

**PACIFICORP**
FIELD OFFICE
PO BOX 1005
HUNTINGTON UT 84528



| | | | |
|---|---|---|---|
| Client Sample ID: | Deer Creek Mine | Sample ID By: | PacifiCorp |
| Date Sampled: | Jun 27, 2013 | Sample Taken By: | VBJ |
| Date Received: | Jun 27, 2013 | Time Received: | 1510 |
| Product Description: | WATER | Time Sampled: | 1205 |
| | | Location: | 10 N XC-5 BOREHOLE |
| | | Mine: | 4 |
| | | Field - pH: | 7.39 pH units |
| | | Field - Flow: | ~43 GPM |
| | | Field - Temperature: | 10.2 DEG. C |

Comments: Dissolved Metals Filtered at Lab

**SGS Minerals Sample ID: 782-1319902-005**

| TESTS | RESULT | UNIT | METHOD | REPORTING LIMIT | ANALYZED DATE | ANALYZED TIME | ANALYST |
|---|---|---|---|---|---|---|---|
| Hardness, mg equivalent CaCO3/L | 361 | mg/L | SM2340-B | 1 | 2013-07-09 | 15:02:53 | AL |
| Acidity | 13 | mg/L | D1067 | 5 | 2013-07-09 | 12:30:00 | AL |
| Anions | 13.41 | meq/L | SM1030E | 0 | 2013-07-09 | 15:02:53 | AL |
| Balance | -0.98 | % | SM1030E | -10 | 2013-07-09 | 15:03:45 | AL |
| Cations | 13.15 | meq/L | SM1030E | 0 | 2013-07-09 | 15:03:45 | AL |
| Alkalinity, mg CaCO3/L (pH 4.5) | 480 | mg/L | SM2320-B | 5 | 2013-07-01 | 14:40:00 | AL |
| Bicarbonate Alkalinity as CaCO3 | 480 | mg/L | SM2320-B | 5 | 2013-07-01 | 14:40:00 | AL |
| Carbonate Alkalinity as CaCO3 | <5 | mg/L | SM2320-B | 5 | 2013-07-01 | 14:40:00 | AL |
| pH | 7.32 | | SM4500-H | 0.01 | 2013-06-28 | 07:55:00 | AL |
| pH Temperature | 20.70 | °C | SM4500-H | 0.01 | 2013-06-28 | 07:55:00 | AL |
| Conductivity | 1168 | µmhos/cm | SM2510 | 0.1 | 2013-06-28 | 08:00:00 | AL |
| Total Dissolved Solids | 729 | mg/L | SM2540-C | 30 | 2013-07-02 | 13:05:00 | AL |
| Chloride, Cl | 8 | mg/L | EPA 300.0 | 1 | 2013-06-28 | 23:21:00 | AL |
| Sulfate, SO4 | 173 | mg/L | EPA 300.0 | 1 | 2013-06-28 | 23:21:00 | AL |
| **METALS BY ICP** | | | | | | | |
| Calcium, Ca - Dissolved | 72.22 | mg/L | EPA 200.7 | 0.03 | 2013-07-08 | 17:19:00 | CM |
| Iron, Fe - Total | <0.05 | mg/L | EPA 200.7 | 0.05 | 2013-07-02 | 17:14:00 | CM |
| Iron, Fe - Dissolved | <0.03 | mg/L | EPA 200.7 | 0.03 | 2013-07-08 | 17:19:00 | CM |
| Magnesium, Mg - Dissolved | 43.85 | mg/L | EPA 200.7 | 0.01 | 2013-07-08 | 17:19:00 | CM |
| Manganese, Mn - Total | 0.002 | mg/L | EPA 200.7 | 0.002 | 2013-07-02 | 17:14:00 | CM |

Lab Supervisor

Domenic Ibanez
Lab Supervisor

SGS North America Inc. | Minerals Services Division
2035 North Airport Road Huntington UT 84528 t (435) 653-2311 f (435)-653-2436 www.sgs.com/minerals

Member of the SGS Group (Société Générale de Surveillance)

*This document is issued by the Company under its General Conditions of Service accessible at http://www.sgs.com/terms_and_conditions.htm. Attention is drawn to the limitation of liability, indemnification and jurisdiction issues defined therein.*

*Any holder of this document is advised that information contained hereon reflects the Company's findings at the time of its intervention only and within the limits of Client's instructions, if any. The Company's sole responsibility is to its Client and this document does not exonerate parties to a transaction from exercising all their rights and obligations under the transaction documents. Any unauthorized alteration, forgery or falsification of the content or appearance of this document is unlawful and offenders may be prosecuted to the fullest extent of the law*

SGS

# Analysis Report

July 10, 2013

**PACIFICORP**
FIELD OFFICE
PO BOX 1005
HUNTINGTON UT 84528



| | | | |
|---|---|---|---|
| Client Sample ID: | Deer Creek Mine | Sample ID By: | PacifiCorp |
| Date Sampled: | Jun 27, 2013 | Sample Taken By: | VBJ |
| Date Received: | Jun 27, 2013 | Time Received: | 1510 |
| Product Description: | WATER | Time Sampled: | 1205 |
| | | Location: | 10 N XC-5 BOREHOLE |
| | | Mine: | 4 |
| | | Field - pH: | 7.39 pH units |
| | | Field - Flow: | ~43 GPM |
| | | Field - Temperature: | 10.2 DEG. C |

Comments: Dissolved Metals Filtered at Lab

**SGS Minerals Sample ID: 782-1319902-005**

| TESTS | RESULT | UNIT | METHOD | REPORTING LIMIT | ANALYZED DATE | ANALYZED TIME | ANALYST |
|---|---|---|---|---|---|---|---|
| **METALS BY ICP (continued)** | | | | | | | |
| Manganese, Mn - Dissolved | 0.002 | mg/L | EPA 200.7 | 0.002 | 2013-07-08 | 17:19:00 | CM |
| Potassium, K - Dissolved | 10.64 | mg/L | EPA 200.7 | 0.14 | 2013-07-08 | 17:19:00 | CM |
| Sodium, Na - Dissolved | 130.37 | mg/L | EPA 200.7 | 0.09 | 2013-07-08 | 17:19:00 | CM |

Lab Supervisor

Domenic Ibanez
Lab Supervisor

SGS North America Inc. | Minerals Services Division
2035 North Airport Road Huntington UT 84528 t (435) 653-2311 f (435)-653-2436 www.sgs.com/minerals

Member of the SGS Group (Société Générale de Surveillance)

*This document is issued by the Company under its General Conditions of Service accessible at http://www.sgs.com/terms_and_conditions.htm. Attention is drawn to the limitation of liability, indemnification and jurisdiction issues defined therein.*

*Any holder of this document is advised that information contained hereon reflects the Company's findings at the time of its intervention only and within the limits of Client's instructions, if any. The Company's sole responsibility is to its Client and this document does not exonerate parties to a transaction from exercising all their rights and obligations under the transaction documents. Any unauthorized alteration, forgery or falsification of the content or appearance of this document is unlawful and offenders may be prosecuted to the fullest extent of the law*

SGS

# Analysis Report

August 08, 2013

**PACIFICORP**
FIELD OFFICE
PO BOX 1005
HUNTINGTON UT 84528



| | | | |
|---|---|---|---|
| Client Sample ID: | Deer Creek Mine | Sample ID By: | PacifiCorp |
| Date Sampled: | Jul 25, 2013 | Sample Taken By: | VBJ |
| Date Received: | Jul 25, 2013 | Time Received: | 1552 |
| Product Description: | WATER | Time Sampled: | 1140 |
| | | Location: | 11W #2 Seal |
| | | Mine: | 4 |
| | | Field - pH: | 6.89 pH units |
| | | Field - Flow: | 5 GPM |
| | | Field - Temperature: | 15.7 DEG. C |

Comments: Dissolved Metals Filtered at Lab

**SGS Minerals Sample ID: 782-1320321-001**

| TESTS | RESULT | UNIT | METHOD | REPORTING LIMIT | ANALYZED DATE | TIME | ANALYST |
|---|---|---|---|---|---|---|---|
| Hardness, mg equivalent CaCO3/L | 306 | mg/L | SM2340-B | 1 | 2013-08-08 | 09:53:23 | AL |
| Acidity | 43 | mg/L | D1067 | 5 | 2013-07-29 | 10:45:00 | AL |
| Anions | 9.96 | meq/L | SM1030E | 0 | 2013-08-08 | 09:53:23 | AL |
| Balance | 1.51 | % | SM1030E | -10 | 2013-08-08 | 09:53:23 | AL |
| Cations | 10.26 | meq/L | SM1030E | 0 | 2013-08-08 | 09:53:23 | AL |
| Alkalinity, mg CaCO3/L (pH 4.5) | 450 | mg/L | SM2320-B | 5 | 2013-07-31 | 13:00:00 | CM |
| Bicarbonate Alkalinity as CaCO3 | 450 | mg/L | SM2320-B | 5 | 2013-07-31 | 13:00:00 | CM |
| Carbonate Alkalinity as CaCO3 | <5 | mg/L | SM2320-B | 5 | 2013-07-31 | 13:00:00 | CM |
| pH | 7.12 | | SM4500-H | 0.01 | 2013-07-25 | 16:11:00 | AL |
| pH Temperature | 15.70 | °C | SM4500-H | 0.01 | 2013-07-25 | 16:11:00 | AL |
| Conductivity | 926 | µmhos/cm | SM2510 | 0.1 | 2013-07-25 | 16:15:00 | CM |
| Total Dissolved Solids | ~~740~~ 534 | mg/L | SM2540-C | 30 | 2013-08-01 | 14:10:00 | CM |
| Chloride, Cl | 8 | mg/L | EPA 300.0 | 1 | 2013-07-29 | 15:20:00 | CM |
| Sulfate, SO4 | 35 | mg/L | EPA 300.0 | 1 | 2013-07-29 | 15:20:00 | CM |
| **METALS BY ICP** | | | | | | | |
| Calcium, Ca - Dissolved | 78.69 | mg/L | EPA 200.7 | 0.03 | 2013-07-31 | 13:30:36 | AL |
| Iron, Fe - Total | 1.76 | mg/L | EPA 200.7 | 0.05 | 2013-08-06 | 13:54:00 | AL |
| Iron, Fe - Dissolved | <0.03 | mg/L | EPA 200.7 | 0.03 | 2013-07-31 | 13:30:36 | AL |
| Magnesium, Mg - Dissolved | 26.64 | mg/L | EPA 200.7 | 0.01 | 2013-07-31 | 13:30:36 | AL |
| Manganese, Mn - Total | 0.088 | mg/L | EPA 200.7 | 0.002 | 2013-08-06 | 13:54:00 | AL |

See 10th N Borehole

Lab Supervisor

Domenic Ibanez
Lab Supervisor

SGS North America Inc. | Minerals Services Division
2035 North Airport Road Huntington UT 84528 t (435) 653-2311 f (435)-653-2436 www.sgs.com/minerals

Member of the SGS Group (Société Générale de Surveillance)

*This document is issued by the Company under its General Conditions of Service accessible at http://www.sgs.com/terms_and_conditions.htm. Attention is drawn to the limitation of liability, indemnification and jurisdiction issues defined therein.*

*Any holder of this document is advised that information contained hereon reflects the Company's findings at the time of its intervention only and within the limits of Client's instructions, if any. The Company's sole responsibility is to its Client and this document does not exonerate parties to a transaction from exercising all their rights and obligations under the transaction documents. Any unauthorized alteration, forgery or falsification of the content or appearance of this document is unlawful and offenders may be prosecuted to the fullest extent of the law*

SGS

# Analysis Report

August 08, 2013

**PACIFICORP**
FIELD OFFICE
PO BOX 1005
HUNTINGTON UT 84528



| | | | |
|---|---|---|---|
| Client Sample ID: | Deer Creek Mine | Sample ID By: | PacifiCorp |
| Date Sampled: | Jul 25, 2013 | Sample Taken By: | VBJ |
| Date Received: | Jul 25, 2013 | Time Received: | 1552 |
| Product Description: | WATER | Time Sampled: | 1140 |
| | | Location: | 11W #2 Seal |
| | | Mine: | 4 |
| | | Field - pH: | 6.89 pH units |
| | | Field - Flow: | 5 GPM |
| | | Field - Temperature: | 15.7 DEG. C |

Comments: Dissolved Metals Filtered at Lab

**SGS Minerals Sample ID: 782-1320321-001**

| TESTS | RESULT | UNIT | METHOD | REPORTING LIMIT | ANALYZED DATE | TIME | ANALYST |
|---|---|---|---|---|---|---|---|
| **METALS BY ICP (continued)** | | | | | | | |
| Manganese, Mn - Dissolved | 0.088 | mg/L | EPA 200.7 | 0.002 | 2013-07-31 | 13:30:36 | AL |
| Potassium, K - Dissolved | 9.97 | mg/L | EPA 200.7 | 0.14 | 2013-07-31 | 13:30:36 | AL |
| Sodium, Na - Dissolved | 89.43 | mg/L | EPA 200.7 | 0.09 | 2013-07-31 | 13:30:36 | AL |

Lab Supervisor

Domenic Ibanez
Lab Supervisor

SGS North America Inc. | Minerals Services Division
2035 North Airport Road Huntington UT 84528 t (435) 653-2311 f (435)-653-2436 www.sgs.com/minerals

Member of the SGS Group (Société Générale de Surveillance)

*This document is issued by the Company under its General Conditions of Service accessible at http://www.sgs.com/terms_and_conditions.htm. Attention is drawn to the limitation of liability, indemnification and jurisdiction issues defined therein.*

*Any holder of this document is advised that information contained hereon reflects the Company's findings at the time of its intervention only and within the limits of Client's instructions, if any. The Company's sole responsibility is to its Client and this document does not exonerate parties to a transaction from exercising all their rights and obligations under the transaction documents. Any unauthorized alteration, forgery or falsification of the content or appearance of this document is unlawful and offenders may be prosecuted to the fullest extent of the law*

# Analysis Report

August 08, 2013

**PACIFICORP**
FIELD OFFICE
PO BOX 1005
HUNTINGTON UT 84528



| | | | |
|---|---|---|---|
| Client Sample ID: | Deer Creek Mine | Sample ID By: | PacifiCorp |
| Date Sampled: | Jul 25, 2013 | Sample Taken By: | VBJ |
| Date Received: | Jul 25, 2013 | Time Received: | 1552 |
| Product Description: | WATER | Time Sampled: | 1235 |
| | | Location: | 17W #2 Seal |
| | | Mine: | 4 |
| | | Field - pH: | 7.17 pH units |
| | | Field - Temperature: | 12.9 DEG. C |

Comments: Dissolved Metals Filtered at Lab

**SGS Minerals Sample ID: 782-1320321-002**

| TESTS | RESULT | UNIT | METHOD | REPORTING LIMIT | ANALYZED DATE | ANALYZED TIME | ANALYST |
|---|---|---|---|---|---|---|---|
| Hardness, mg equivalent CaCO3/L | 362 | mg/L | SM2340-B | 1 | 2013-08-08 | 09:53:23 | AL |
| Acidity | 25 | mg/L | D1067 | 5 | 2013-07-29 | 10:45:00 | AL |
| Anions | 10.09 | meq/L | SM1030E | 0 | 2013-08-08 | 09:53:23 | AL |
| Balance | 1.37 | % | SM1030E | -10 | 2013-08-08 | 09:53:23 | AL |
| Cations | 10.38 | meq/L | SM1030E | 0 | 2013-08-08 | 09:53:23 | AL |
| Alkalinity, mg CaCO3/L (pH 4.5) | 355 | mg/L | SM2320-B | 5 | 2013-07-31 | 13:00:00 | CM |
| Bicarbonate Alkalinity as CaCO3 | 355 | mg/L | SM2320-B | 5 | 2013-07-31 | 13:00:00 | CM |
| Carbonate Alkalinity as CaCO3 | <5 | mg/L | SM2320-B | 5 | 2013-07-31 | 13:00:00 | CM |
| pH | 7.25 | | SM4500-H | 0.01 | 2013-07-25 | 16:13:00 | AL |
| pH Temperature | 14.20 | °C | SM4500-H | 0.01 | 2013-07-25 | 16:13:00 | AL |
| Conductivity | 934 | µmhos/cm | SM2510 | 0.1 | 2013-07-25 | 16:15:00 | CM |
| Total Dissolved Solids | 554 | mg/L | SM2540-C | 30 | 2013-08-01 | 14:10:00 | CM |
| Chloride, Cl | 12 | mg/L | EPA 300.0 | 1 | 2013-07-29 | 15:20:00 | CM |
| Sulfate, SO4 | 128 | mg/L | EPA 300.0 | 1 | 2013-07-29 | 15:20:00 | CM |
| **METALS BY ICP** | | | | | | | |
| Calcium, Ca - Dissolved | 69.63 | mg/L | EPA 200.7 | 0.03 | 2013-07-31 | 13:30:37 | AL |
| Iron, Fe - Total | 9.79 | mg/L | EPA 200.7 | 0.05 | 2013-08-06 | 13:54:00 | AL |
| Iron, Fe - Dissolved | <0.03 | mg/L | EPA 200.7 | 0.03 | 2013-07-31 | 13:30:37 | AL |
| Magnesium, Mg - Dissolved | 45.75 | mg/L | EPA 200.7 | 0.01 | 2013-07-31 | 13:30:37 | AL |
| Manganese, Mn - Total | 0.025 | mg/L | EPA 200.7 | 0.002 | 2013-08-06 | 13:54:00 | AL |
| Manganese, Mn - Dissolved | 0.025 | mg/L | EPA 200.7 | 0.002 | 2013-07-31 | 13:30:37 | AL |

Lab Supervisor

Domenic Ibanez
Lab Supervisor

SGS North America Inc. | Minerals Services Division
2035 North Airport Road Huntington UT 84528 t (435) 653-2311 f (435)-653-2436 www.sgs.com/minerals

Member of the SGS Group (Société Générale de Surveillance)

*This document is issued by the Company under its General Conditions of Service accessible at http://www.sgs.com/terms_and_conditions.htm. Attention is drawn to the limitation of liability, indemnification and jurisdiction issues defined therein.*

*Any holder of this document is advised that information contained hereon reflects the Company's findings at the time of its intervention only and within the limits of Client's instructions, if any. The Company's sole responsibility is to its Client and this document does not exonerate parties to a transaction from exercising all their rights and obligations under the transaction documents. Any unauthorized alteration, forgery or falsification of the content or appearance of this document is unlawful and offenders may be prosecuted to the fullest extent of the law*

SGS

# Analysis Report

August 08, 2013

**PACIFICORP**
FIELD OFFICE
PO BOX 1005
HUNTINGTON UT 84528



| | | | |
|---|---|---|---|
| Client Sample ID: | Deer Creek Mine | Sample ID By: | PacifiCorp |
| Date Sampled: | Jul 25, 2013 | Sample Taken By: | VBJ |
| Date Received: | Jul 25, 2013 | Time Received: | 1552 |
| Product Description: | WATER | Time Sampled: | 1235 |
| | | Location: | 17W #2 Seal |
| | | Mine: | 4 |
| | | Field - pH: | 7.17 pH units |
| | | Field - Temperature: | 12.9 DEG. C |

Comments: Dissolved Metals Filtered at Lab

**SGS Minerals Sample ID: 782-1320321-002**

| TESTS | RESULT | UNIT | METHOD | REPORTING LIMIT | ANALYZED DATE | ANALYZED TIME | ANALYST |
|---|---|---|---|---|---|---|---|
| **METALS BY ICP (continued)** | | | | | | | |
| Potassium, K - Dissolved | 11.24 | mg/L | EPA 200.7 | 0.14 | 2013-07-31 | 13:30:37 | AL |
| Sodium, Na - Dissolved | 65.51 | mg/L | EPA 200.7 | 0.09 | 2013-07-31 | 13:30:37 | AL |

Lab Supervisor

Domenic Ibanez
Lab Supervisor

SGS North America Inc. | Minerals Services Division
2035 North Airport Road Huntington UT 84528 t (435) 653-2311 f (435)-653-2436 www.sgs.com/minerals

Member of the SGS Group (Société Générale de Surveillance)

*This document is issued by the Company under its General Conditions of Service accessible at http://www.sgs.com/terms_and_conditions.htm. Attention is drawn to the limitation of liability, indemnification and jurisdiction issues defined therein.*

*Any holder of this document is advised that information contained hereon reflects the Company's findings at the time of its intervention only and within the limits of Client's instructions, if any. The Company's sole responsibility is to its Client and this document does not exonerate parties to a transaction from exercising all their rights and obligations under the transaction documents. Any unauthorized alteration, forgery or falsification of the content or appearance of this document is unlawful and offenders may be prosecuted to the fullest extent of the law*

# Analysis Report

August 08, 2013

**PACIFICORP**
FIELD OFFICE
PO BOX 1005
HUNTINGTON UT 84528



| | | | |
|---|---|---|---|
| Client Sample ID: | Deer Creek Mine | Sample ID By: | PacifiCorp |
| Date Sampled: | Jul 25, 2013 | Sample Taken By: | VBJ |
| Date Received: | Jul 25, 2013 | Time Received: | 1552 |
| Product Description: | WATER | Time Sampled: | 1305 |
| | | Location: | 10N XC-5 Borehole |
| | | Mine: | 4 |
| | | Field - pH: | 7.26 pH units |
| | | Field - Flow: | ~50 GPM |
| | | Field - Temperature: | 12.0 DEG. C |

Comments: Dissolved Metals Filtered at Lab

**SGS Minerals Sample ID: 782-1320321-003**

| TESTS | RESULT | UNIT | METHOD | REPORTING LIMIT | ANALYZED DATE | ANALYZED TIME | ANALYST |
|---|---|---|---|---|---|---|---|
| Hardness, mg equivalent CaCO3/L | 369 | mg/L | SM2340-B | 1 | 2013-08-08 | 09:53:23 | AL |
| Acidity | 10 | mg/L | D1067 | 5 | 2013-07-29 | 10:45:00 | AL |
| Anions | 13.10 | meq/L | SM1030E | 0 | 2013-08-08 | 09:53:23 | AL |
| Balance | 0.58 | % | SM1030E | -10 | 2013-08-08 | 09:53:23 | AL |
| Cations | 13.25 | meq/L | SM1030E | 0 | 2013-08-08 | 09:53:23 | AL |
| Alkalinity, mg CaCO3/L (pH 4.5) | 465 | mg/L | SM2320-B | 5 | 2013-07-31 | 13:00:00 | CM |
| Bicarbonate Alkalinity as CaCO3 | 465 | mg/L | SM2320-B | 5 | 2013-07-31 | 13:00:00 | CM |
| Carbonate Alkalinity as CaCO3 | <5 | mg/L | SM2320-B | 5 | 2013-07-31 | 13:00:00 | CM |
| pH | 7.34 | | SM4500-H | 0.01 | 2013-07-25 | 16:15:00 | AL |
| pH Temperature | 14.70 | °C | SM4500-H | 0.01 | 2013-07-25 | 16:15:00 | AL |
| Conductivity | 1194 | µmhos/cm | SM2510 | 0.1 | 2013-07-25 | 16:15:00 | CM |
| Total Dissolved Solids | ~~534~~ 740 | mg/L | SM2540-C | 30 | 2013-08-01 | 14:10:00 | CM |
| Chloride, Cl | 7 | mg/L | EPA 300.0 | 1 | 2013-07-29 | 15:20:00 | CM |
| Sulfate, SO4 | 173 | mg/L | EPA 300.0 | 1 | 2013-07-29 | 15:20:00 | CM |
| **METALS BY ICP** | | | | | | | |
| Calcium, Ca - Dissolved | 73.64 | mg/L | EPA 200.7 | 0.03 | 2013-07-31 | 13:30:38 | AL |
| Iron, Fe - Total | <0.05 | mg/L | EPA 200.7 | 0.05 | 2013-08-06 | 13:54:00 | AL |
| Iron, Fe - Dissolved | <0.03 | mg/L | EPA 200.7 | 0.03 | 2013-07-31 | 13:30:38 | AL |
| Magnesium, Mg - Dissolved | 45.07 | mg/L | EPA 200.7 | 0.01 | 2013-07-31 | 13:30:38 | AL |
| Manganese, Mn - Total | 0.002 | mg/L | EPA 200.7 | 0.002 | 2013-08-06 | 13:54:00 | AL |

See ltr #2

Lab Supervisor

Domenic Ibanez
Lab Supervisor

SGS North America Inc. | Minerals Services Division
2035 North Airport Road Huntington UT 84528 t (435) 653-2311 f (435)-653-2436 www.sgs.com/minerals

Member of the SGS Group (Société Générale de Surveillance)

*This document is issued by the Company under its General Conditions of Service accessible at http://www.sgs.com/terms_and_conditions.htm. Attention is drawn to the limitation of liability, indemnification and jurisdiction issues defined therein.*

*Any holder of this document is advised that information contained hereon reflects the Company's findings at the time of its intervention only and within the limits of Client's instructions, if any. The Company's sole responsibility is to its Client and this document does not exonerate parties to a transaction from exercising all their rights and obligations under the transaction documents. Any unauthorized alteration, forgery or falsification of the content or appearance of this document is unlawful and offenders may be prosecuted to the fullest extent of the law*

# Analysis Report

August 08, 2013

**PACIFICORP**
FIELD OFFICE
PO BOX 1005
HUNTINGTON UT 84528



| | | | |
|---|---|---|---|
| Client Sample ID: | Deer Creek Mine | Sample ID By: | PacifiCorp |
| Date Sampled: | Jul 25, 2013 | Sample Taken By: | VBJ |
| Date Received: | Jul 25, 2013 | Time Received: | 1552 |
| Product Description: | WATER | Time Sampled: | 1305 |
| | | Location: | 10N XC-5 Borehole |
| | | Mine: | 4 |
| | | Field - pH: | 7.26 pH units |
| | | Field - Flow: | ~50 GPM |
| | | Field - Temperature: | 12.0 DEG. C |

Comments: Dissolved Metals Filtered at Lab

**SGS Minerals Sample ID: 782-1320321-003**

| TESTS | RESULT | UNIT | METHOD | REPORTING LIMIT | ANALYZED DATE | ANALYZED TIME | ANALYST |
|---|---|---|---|---|---|---|---|
| **METALS BY ICP (continued)** | | | | | | | |
| Manganese, Mn - Dissolved | <0.002 | mg/L | EPA 200.7 | 0.002 | 2013-07-31 | 13:30:38 | AL |
| Potassium, K - Dissolved | 10.71 | mg/L | EPA 200.7 | 0.14 | 2013-07-31 | 13:30:38 | AL |
| Sodium, Na - Dissolved | 128.65 | mg/L | EPA 200.7 | 0.09 | 2013-07-31 | 13:30:38 | AL |

Lab Supervisor

Domenic Ibanez
Lab Supervisor

SGS North America Inc. | Minerals Services Division
2035 North Airport Road Huntington UT 84528 t (435) 653-2311 f (435)-653-2436 www.sgs.com/minerals

Member of the SGS Group (Société Générale de Surveillance)

*This document is issued by the Company under its General Conditions of Service accessible at http://www.sgs.com/terms_and_conditions.htm. Attention is drawn to the limitation of liability, indemnification and jurisdiction issues defined therein.*

*Any holder of this document is advised that information contained hereon reflects the Company's findings at the time of its intervention only and within the limits of Client's instructions, if any. The Company's sole responsibility is to its Client and this document does not exonerate parties to a transaction from exercising all their rights and obligations under the transaction documents. Any unauthorized alteration, forgery or falsification of the content or appearance of this document is unlawful and offenders may be prosecuted to the fullest extent of the law*

# Analysis Report

September 05, 2013

**PACIFICORP**
FIELD OFFICE
PO BOX 1005
HUNTINGTON UT 84528



| | | | |
|---|---|---|---|
| Client Sample ID: | Deer Creek Mine | Sample ID By: | PacifiCorp |
| Date Sampled: | Aug 21, 2013 | Sample Taken By: | VBJ |
| Date Received: | Aug 21, 2013 | Time Received: | 1447 |
| Product Description: | WATER | Time Sampled: | 1100 |
| | | Location: | 11th W #2 Seal |
| | | Mine: | 4 |
| | | Field - pH: | 6.89 pH units |
| | | Field - Flow: | 5 GPM |
| | | Field - Temperature: | 15.6 DEG. C |

Comments: Dissolved Metals Filtered at Lab

**SGS Minerals Sample ID: 782-1320697-001**

| TESTS | RESULT | UNIT | METHOD | REPORTING LIMIT | ANALYZED DATE | ANALYZED TIME | ANALYST |
|---|---|---|---|---|---|---|---|
| Hardness, mg equivalent CaCO3/L | 295 | mg/L | SM2340-B | 1 | 2013-09-04 | 14:45:00 | CM |
| Acidity | 29 | mg/L | D1067 | 5 | 2013-09-04 | 13:30:00 | CM |
| Anions | 10.00 | meq/L | SM1030E | 0 | 2013-09-04 | 14:45:00 | CM |
| Balance | 0.14 | % | SM1030E | -10 | 2013-09-04 | 14:45:00 | CM |
| Cations | 10.03 | meq/L | SM1030E | 0 | 2013-09-04 | 14:45:00 | CM |
| Alkalinity, mg CaCO3/L (pH 4.5) | 453 | mg/L | SM2320-B | 5 | 2013-08-28 | 13:00:00 | CM |
| Bicarbonate Alkalinity as CaCO3 | 453 | mg/L | SM2320-B | 5 | 2013-08-28 | 13:00:00 | CM |
| Carbonate Alkalinity as CaCO3 | <5 | mg/L | SM2320-B | 5 | 2013-08-28 | 13:00:00 | CM |
| pH | 7.13 | | SM4500-H | 0.01 | 2013-08-21 | 15:00:00 | AL |
| pH Temperature | 14.30 | °C | SM4500-H | 0.01 | 2013-08-21 | 15:00:00 | AL |
| Conductivity | 921 | µmhos/cm | SM2510 | 0.1 | 2013-08-21 | 15:00:00 | AL |
| Total Dissolved Solids | 528 | mg/L | SM2540-C | 30 | 2013-08-28 | 12:45:00 | CM |
| Chloride, Cl | 8 | mg/L | EPA 300.0 | 1 | 2013-08-22 | 15:21:00 | AL |
| Sulfate, SO4 | 34 | mg/L | EPA 300.0 | 1 | 2013-08-22 | 15:21:00 | AL |
| **METALS BY ICP** | | | | | | | |
| Calcium, Ca - Dissolved | 75.74 | mg/L | EPA 200.7 | 0.03 | 2013-08-28 | 15:00:00 | CM |
| Iron, Fe - Total | 3.42 | mg/L | EPA 200.7 | 0.05 | 2013-08-23 | 14:28:00 | CM |
| Iron, Fe - Dissolved | <0.03 | mg/L | EPA 200.7 | 0.03 | 2013-08-28 | 15:00:00 | CM |
| Magnesium, Mg - Dissolved | 25.77 | mg/L | EPA 200.7 | 0.01 | 2013-08-29 | 10:45:33 | CM |
| Manganese, Mn - Total | 0.086 | mg/L | EPA 200.7 | 0.002 | 2013-08-28 | 15:00:00 | CM |

Lab Supervisor

Domenic Ibanez
Lab Supervisor

SGS North America Inc. | Minerals Services Division
2035 North Airport Road Huntington UT 84528 t (435) 653-2311 f (435)-653-2436 www.sgs.com/minerals

Member of the SGS Group (Société Générale de Surveillance)

*This document is issued by the Company under its General Conditions of Service accessible at http://www.sgs.com/terms_and_conditions.htm. Attention is drawn to the limitation of liability, indemnification and jurisdiction issues defined therein.*

*Any holder of this document is advised that information contained hereon reflects the Company's findings at the time of its intervention only and within the limits of Client's instructions, if any. The Company's sole responsibility is to its Client and this document does not exonerate parties to a transaction from exercising all their rights and obligations under the transaction documents. Any unauthorized alteration, forgery or falsification of the content or appearance of this document is unlawful and offenders may be prosecuted to the fullest extent of the law*

# Analysis Report

September 05, 2013

**PACIFICORP**
FIELD OFFICE
PO BOX 1005
HUNTINGTON UT 84528



| | | | |
|---|---|---|---|
| Client Sample ID: | Deer Creek Mine | Sample ID By: | PacifiCorp |
| Date Sampled: | Aug 21, 2013 | Sample Taken By: | VBJ |
| Date Received: | Aug 21, 2013 | Time Received: | 1447 |
| Product Description: | WATER | Time Sampled: | 1100 |
| | | Location: | 11th W #2 Seal |
| | | Mine: | 4 |
| | | Field - pH: | 6.89 pH units |
| | | Field - Flow: | 5 GPM |
| | | Field - Temperature: | 15.6 DEG. C |

Comments: Dissolved Metals Filtered at Lab

**SGS Minerals Sample ID: 782-1320697-001**

| TESTS | RESULT | UNIT | METHOD | REPORTING LIMIT | ANALYZED DATE | ANALYZED TIME | ANALYST |
|---|---|---|---|---|---|---|---|
| **METALS BY ICP (continued)** | | | | | | | |
| Manganese, Mn - Dissolved | 0.085 | mg/L | EPA 200.7 | 0.002 | 2013-08-29 | 10:45:33 | CM |
| Potassium, K - Dissolved | 9.61 | mg/L | EPA 200.7 | 0.14 | 2013-08-29 | 14:30:00 | CM |
| Sodium, Na - Dissolved | 89.28 | mg/L | EPA 200.7 | 0.09 | 2013-08-28 | 15:00:00 | CM |

Lab Supervisor

Domenic Ibanez
Lab Supervisor

SGS North America Inc. | Minerals Services Division
2035 North Airport Road Huntington UT 84528 t (435) 653-2311 f (435)-653-2436 www.sgs.com/minerals

Member of the SGS Group (Société Générale de Surveillance)

*This document is issued by the Company under its General Conditions of Service accessible at http://www.sgs.com/terms_and_conditions.htm. Attention is drawn to the limitation of liability, indemnification and jurisdiction issues defined therein.*

*Any holder of this document is advised that information contained hereon reflects the Company's findings at the time of its intervention only and within the limits of Client's instructions, if any. The Company's sole responsibility is to its Client and this document does not exonerate parties to a transaction from exercising all their rights and obligations under the transaction documents. Any unauthorized alteration, forgery or falsification of the content or appearance of this document is unlawful and offenders may be prosecuted to the fullest extent of the law*

# Analysis Report

September 05, 2013

**PACIFICORP**
FIELD OFFICE
PO BOX 1005
HUNTINGTON UT 84528



| | | | |
|---|---|---|---|
| Client Sample ID: | Deer Creek Mine | Sample ID By: | PacifiCorp |
| Date Sampled: | Aug 21, 2013 | Sample Taken By: | VBJ |
| Date Received: | Aug 21, 2013 | Time Received: | 1447 |
| Product Description: | WATER | Time Sampled: | 1139 |
| | | Location: | 17 W #2 Seal |
| | | Mine: | 4 |
| | | Field - pH: | 7.47 pH units |
| | | Field - Temperature: | 12.7 DEG. C |

Comments: Dissolved Metals Filtered at Lab

**SGS Minerals Sample ID: 782-1320697-002**

| TESTS | RESULT | UNIT | METHOD | REPORTING LIMIT | ANALYZED DATE | ANALYZED TIME | ANALYST |
|---|---|---|---|---|---|---|---|
| Hardness, mg equivalent CaCO3/L | 347 | mg/L | SM2340-B | 1 | 2013-09-04 | 14:45:00 | CM |
| Acidity | 8 | mg/L | D1067 | 5 | 2013-09-04 | 13:30:00 | CM |
| Anions | 10.11 | meq/L | SM1030E | 0 | 2013-09-04 | 14:45:00 | CM |
| Balance | -0.11 | % | SM1030E | -10 | 2013-09-04 | 14:45:00 | CM |
| Cations | 10.09 | meq/L | SM1030E | 0 | 2013-09-04 | 14:45:00 | CM |
| Alkalinity, mg CaCO3/L (pH 4.5) | 358 | mg/L | SM2320-B | 5 | 2013-08-28 | 13:00:00 | CM |
| Bicarbonate Alkalinity as CaCO3 | 358 | mg/L | SM2320-B | 5 | 2013-08-28 | 13:00:00 | CM |
| Carbonate Alkalinity as CaCO3 | <5 | mg/L | SM2320-B | 5 | 2013-08-28 | 13:00:00 | CM |
| pH | 7.51 | | SM4500-H | 0.01 | 2013-08-21 | 15:02:00 | AL |
| pH Temperature | 13.70 | °C | SM4500-H | 0.01 | 2013-08-21 | 15:02:00 | AL |
| Conductivity | 931 | µmhos/cm | SM2510 | 0.1 | 2013-08-21 | 15:00:00 | AL |
| Total Dissolved Solids | 555 | mg/L | SM2540-C | 30 | 2013-08-28 | 12:45:00 | CM |
| Chloride, Cl | 12 | mg/L | EPA 300.0 | 1 | 2013-08-22 | 15:21:00 | CM |
| Sulfate, SO4 | 125 | mg/L | EPA 300.0 | 1 | 2013-08-22 | 15:21:00 | CM |
| **METALS BY ICP** | | | | | | | |
| Calcium, Ca - Dissolved | 66.60 | mg/L | EPA 200.7 | 0.03 | 2013-08-28 | 15:00:00 | CM |
| Iron, Fe - Total | 2.83 | mg/L | EPA 200.7 | 0.05 | 2013-08-23 | 14:28:00 | CM |
| Iron, Fe - Dissolved | <0.03 | mg/L | EPA 200.7 | 0.03 | 2013-08-28 | 15:00:00 | CM |
| Magnesium, Mg - Dissolved | 43.87 | mg/L | EPA 200.7 | 0.01 | 2013-08-29 | 10:45:34 | CM |
| Manganese, Mn - Total | 0.025 | mg/L | EPA 200.7 | 0.002 | 2013-08-28 | 15:00:00 | CM |
| Manganese, Mn - Dissolved | 0.025 | mg/L | EPA 200.7 | 0.002 | 2013-08-29 | 10:45:34 | CM |

Lab Supervisor

Domenic Ibanez
Lab Supervisor

SGS North America Inc. | Minerals Services Division
2035 North Airport Road Huntington UT 84528 t (435) 653-2311 f (435)-653-2436 www.sgs.com/minerals

Member of the SGS Group (Société Générale de Surveillance)

*This document is issued by the Company under its General Conditions of Service accessible at http://www.sgs.com/terms_and_conditions.htm. Attention is drawn to the limitation of liability, indemnification and jurisdiction issues defined therein.*

*Any holder of this document is advised that information contained hereon reflects the Company's findings at the time of its intervention only and within the limits of Client's instructions, if any. The Company's sole responsibility is to its Client and this document does not exonerate parties to a transaction from exercising all their rights and obligations under the transaction documents. Any unauthorized alteration, forgery or falsification of the content or appearance of this document is unlawful and offenders may be prosecuted to the fullest extent of the law*

# Analysis Report

September 05, 2013

**PACIFICORP**
FIELD OFFICE
PO BOX 1005
HUNTINGTON UT 84528



| | | | |
|---|---|---|---|
| Client Sample ID: | Deer Creek Mine | Sample ID By: | PacifiCorp |
| Date Sampled: | Aug 21, 2013 | Sample Taken By: | VBJ |
| Date Received: | Aug 21, 2013 | Time Received: | 1447 |
| Product Description: | WATER | Time Sampled: | 1139 |
| | | Location: | 17 W #2 Seal |
| | | Mine: | 4 |
| | | Field - pH: | 7.47 pH units |
| | | Field - Temperature: | 12.7 DEG. C |

Comments: Dissolved Metals Filtered at Lab

**SGS Minerals Sample ID: 782-1320697-002**

| TESTS | RESULT | UNIT | METHOD | REPORTING LIMIT | ANALYZED DATE | ANALYZED TIME | ANALYST |
|---|---|---|---|---|---|---|---|
| **METALS BY ICP (continued)** | | | | | | | |
| Potassium, K - Dissolved | 10.67 | mg/L | EPA 200.7 | 0.14 | 2013-08-29 | 14:30:00 | CM |
| Sodium, Na - Dissolved | 66.23 | mg/L | EPA 200.7 | 0.09 | 2013-08-28 | 15:00:00 | CM |

Lab Supervisor

Domenic Ibanez
Lab Supervisor

SGS North America Inc. | Minerals Services Division
2035 North Airport Road Huntington UT 84528 t (435) 653-2311 f (435)-653-2436 www.sgs.com/minerals

Member of the SGS Group (Société Générale de Surveillance)

*This document is issued by the Company under its General Conditions of Service accessible at http://www.sgs.com/terms_and_conditions.htm. Attention is drawn to the limitation of liability, indemnification and jurisdiction issues defined therein.*

*Any holder of this document is advised that information contained hereon reflects the Company's findings at the time of its intervention only and within the limits of Client's instructions, if any. The Company's sole responsibility is to its Client and this document does not exonerate parties to a transaction from exercising all their rights and obligations under the transaction documents. Any unauthorized alteration, forgery or falsification of the content or appearance of this document is unlawful and offenders may be prosecuted to the fullest extent of the law*

# Analysis Report

September 05, 2013

**PACIFICORP**
FIELD OFFICE
PO BOX 1005
HUNTINGTON UT 84528



| | | | |
|---|---|---|---|
| Client Sample ID: | Deer Creek Mine | Sample ID By: | PacifiCorp |
| Date Sampled: | Aug 21, 2013 | Sample Taken By: | VBJ |
| Date Received: | Aug 21, 2013 | Time Received: | 1447 |
| Product Description: | WATER | Time Sampled: | 1205 |
| | | Location: | 10 N XC-5 Borehole |
| | | Mine: | 4 |
| | | Field - pH: | 7.15 pH units |
| | | Field - Flow: | ~50 GPM |
| | | Field - Temperature: | 12.0 DEG. C |

Comments: Dissolved Metals Filtered at Lab

**SGS Minerals Sample ID: 782-1320697-003**

| TESTS | RESULT | UNIT | METHOD | REPORTING LIMIT | ANALYZED DATE | TIME | ANALYST |
|---|---|---|---|---|---|---|---|
| Hardness, mg equivalent CaCO3/L | 371 | mg/L | SM2340-B | 1 | 2013-09-04 | 14:45:00 | CM |
| Acidity | 21 | mg/L | D1067 | 5 | 2013-09-04 | 13:30:00 | CM |
| Anions | 13.27 | meq/L | SM1030E | 0 | 2013-09-04 | 14:45:00 | CM |
| Balance | -0.01 | % | SM1030E | -10 | 2013-09-04 | 14:45:00 | CM |
| Cations | 13.27 | meq/L | SM1030E | 0 | 2013-09-04 | 14:45:00 | CM |
| Alkalinity, mg CaCO3/L (pH 4.5) | 474 | mg/L | SM2320-B | 5 | 2013-08-28 | 13:00:00 | CM |
| Bicarbonate Alkalinity as CaCO3 | 474 | mg/L | SM2320-B | 5 | 2013-08-28 | 13:00:00 | CM |
| Carbonate Alkalinity as CaCO3 | <5 | mg/L | SM2320-B | 5 | 2013-08-28 | 13:00:00 | CM |
| pH | 7.36 | | SM4500-H | 0.01 | 2013-08-21 | 15:04:00 | AL |
| pH Temperature | 15.20 | °C | SM4500-H | 0.01 | 2013-08-21 | 15:04:00 | AL |
| Conductivity | 1200 | µmhos/cm | SM2510 | 0.1 | 2013-08-21 | 15:00:00 | AL |
| Total Dissolved Solids | 747 | mg/L | SM2540-C | 30 | 2013-08-28 | 12:45:00 | CM |
| Chloride, Cl | 7 | mg/L | EPA 300.0 | 1 | 2013-08-22 | 15:21:00 | CM |
| Sulfate, SO4 | 172 | mg/L | EPA 300.0 | 1 | 2013-08-22 | 15:21:00 | CM |
| **METALS BY ICP** | | | | | | | |
| Calcium, Ca - Dissolved | 74.08 | mg/L | EPA 200.7 | 0.03 | 2013-08-28 | 15:00:00 | CM |
| Iron, Fe - Total | <0.05 | mg/L | EPA 200.7 | 0.05 | 2013-08-23 | 14:28:00 | CM |
| Iron, Fe - Dissolved | <0.03 | mg/L | EPA 200.7 | 0.03 | 2013-08-28 | 15:00:00 | CM |
| Magnesium, Mg - Dissolved | 45.25 | mg/L | EPA 200.7 | 0.01 | 2013-08-29 | 10:45:35 | CM |
| Manganese, Mn - Total | 0.002 | mg/L | EPA 200.7 | 0.002 | 2013-08-28 | 15:00:00 | CM |

Lab Supervisor

Domenic Ibanez
Lab Supervisor

SGS North America Inc. | Minerals Services Division
2035 North Airport Road Huntington UT 84528 t (435) 653-2311 f (435)-653-2436 www.sgs.com/minerals

Member of the SGS Group (Société Générale de Surveillance)

*This document is issued by the Company under its General Conditions of Service accessible at http://www.sgs.com/terms_and_conditions.htm. Attention is drawn to the limitation of liability, indemnification and jurisdiction issues defined therein.*

*Any holder of this document is advised that information contained hereon reflects the Company's findings at the time of its intervention only and within the limits of Client's instructions, if any. The Company's sole responsibility is to its Client and this document does not exonerate parties to a transaction from exercising all their rights and obligations under the transaction documents. Any unauthorized alteration, forgery or falsification of the content or appearance of this document is unlawful and offenders may be prosecuted to the fullest extent of the law*

SGS

# Analysis Report

September 05, 2013

**PACIFICORP**
FIELD OFFICE
PO BOX 1005
HUNTINGTON UT 84528



| | | | |
|---|---|---|---|
| Client Sample ID: | Deer Creek Mine | Sample ID By: | PacifiCorp |
| Date Sampled: | Aug 21, 2013 | Sample Taken By: | VBJ |
| Date Received: | Aug 21, 2013 | Time Received: | 1447 |
| Product Description: | WATER | Time Sampled: | 1205 |
| | | Location: | 10 N XC-5 Borehole |
| | | Mine: | 4 |
| | | Field - pH: | 7.15 pH units |
| | | Field - Flow: | ~50 GPM |
| | | Field - Temperature: | 12.0 DEG. C |

Comments: Dissolved Metals Filtered at Lab

**SGS Minerals Sample ID: 782-1320697-003**

| TESTS | RESULT | UNIT | METHOD | REPORTING LIMIT | ANALYZED DATE | ANALYZED TIME | ANALYST |
|---|---|---|---|---|---|---|---|
| **METALS BY ICP (continued)** | | | | | | | |
| Manganese, Mn - Dissolved | <0.002 | mg/L | EPA 200.7 | 0.002 | 2013-08-29 | 10:45:35 | CM |
| Potassium, K - Dissolved | 10.40 | mg/L | EPA 200.7 | 0.14 | 2013-08-29 | 14:30:00 | CM |
| Sodium, Na - Dissolved | 128.39 | mg/L | EPA 200.7 | 0.09 | 2013-08-28 | 15:00:00 | CM |

Lab Supervisor

Domenic Ibanez
Lab Supervisor

SGS North America Inc. | Minerals Services Division
2035 North Airport Road Huntington UT 84528 t (435) 653-2311 f (435)-653-2436 www.sgs.com/minerals

Member of the SGS Group (Société Générale de Surveillance)

*This document is issued by the Company under its General Conditions of Service accessible at http://www.sgs.com/terms_and_conditions.htm. Attention is drawn to the limitation of liability, indemnification and jurisdiction issues defined therein.*

*Any holder of this document is advised that information contained hereon reflects the Company's findings at the time of its intervention only and within the limits of Client's instructions, if any. The Company's sole responsibility is to its Client and this document does not exonerate parties to a transaction from exercising all their rights and obligations under the transaction documents. Any unauthorized alteration, forgery or falsification of the content or appearance of this document is unlawful and offenders may be prosecuted to the fullest extent of the law*

# Analysis Report

October 02, 2013

**PACIFICORP**
FIELD OFFICE
PO BOX 1005
HUNTINGTON UT 84528



| | | | |
|---|---|---|---|
| Client Sample ID: | Deer Creek Mine | Sample ID By: | PacifiCorp |
| Date Sampled: | Sep 18, 2013 | Sample Taken By: | VBJ |
| Date Received: | Sep 18, 2013 | Time Received: | 1608 |
| Product Description: | WATER | Time Sampled: | 1230 |
| | | Location: | 11 W #2 SEAL |
| | | Mine: | 4 |
| | | Field - pH: | 7.35 pH units |
| | | Field - Flow: | 5 GPM |
| | | Field - Temperature: | 15.4 DEG. C |

Comments: Dissolved Metals Filtered at Lab

**SGS Minerals Sample ID: 782-1321130-003**

| TESTS | RESULT | UNIT | METHOD | REPORTING LIMIT | ANALYZED DATE | ANALYZED TIME | ANALYST |
|---|---|---|---|---|---|---|---|
| Hardness, mg equivalent CaCO3/L | 288 | mg/L | SM2340-B | 1 | 2013-09-30 | 17:33:53 | CM |
| Acidity | 24 | mg/L | D1067 | 5 | 2013-09-30 | 08:10:00 | CM |
| Anions | 10.06 | meq/L | SM1030E | 0 | 2013-09-30 | 17:33:53 | CM |
| Balance | -1.28 | % | SM1030E | -10 | 2013-09-30 | 17:33:53 | CM |
| Cations | 9.80 | meq/L | SM1030E | 0 | 2013-09-30 | 17:33:53 | CM |
| Alkalinity, mg CaCO3/L (pH 4.5) | 457 | mg/L | SM2320-B | 5 | 2013-09-24 | 11:50:00 | AL |
| Bicarbonate Alkalinity as CaCO3 | 457 | mg/L | SM2320-B | 5 | 2013-09-24 | 11:50:00 | AL |
| Carbonate Alkalinity as CaCO3 | <5 | mg/L | SM2320-B | 5 | 2013-09-24 | 11:50:00 | AL |
| pH | 7.17 | | SM4500-H | 0.01 | 2013-09-19 | 08:08:00 | CM |
| pH Temperature | 20.80 | °C | SM4500-H | 0.01 | 2013-09-19 | 08:08:00 | CM |
| Conductivity | 932 | µmhos/cm | SM2510 | 0.1 | 2013-09-19 | 08:10:00 | CM |
| Total Dissolved Solids | 520 | mg/L | SM2540-C | 30 | 2013-09-19 | 13:45:00 | CM |
| Chloride, Cl | 8 | mg/L | EPA 300.0 | 1 | 2013-09-24 | 00:10:00 | CM |
| Sulfate, SO4 | 34 | mg/L | EPA 300.0 | 1 | 2013-09-24 | 00:10:00 | CM |
| **METALS BY ICP** | | | | | | | |
| Calcium, Ca - Dissolved | 73.58 | mg/L | EPA 200.7 | 0.03 | 2013-09-25 | 15:40:00 | CM |
| Iron, Fe - Total | 2.58 | mg/L | EPA 200.7 | 0.05 | 2013-09-27 | 12:57:00 | CM |
| Iron, Fe - Dissolved | <0.03 | mg/L | EPA 200.7 | 0.03 | 2013-09-25 | 15:40:00 | CM |
| Magnesium, Mg - Dissolved | 25.39 | mg/L | EPA 200.7 | 0.01 | 2013-09-25 | 15:40:00 | CM |
| Manganese, Mn - Total | 0.082 | mg/L | EPA 200.7 | 0.002 | 2013-09-27 | 12:57:00 | CM |

Lab Supervisor

Domenic Ibanez
Lab Supervisor

SGS North America Inc. | Minerals Services Division
2035 North Airport Road Huntington UT 84528 t (435) 653-2311 f (435)-653-2436 www.sgs.com/minerals

Member of the SGS Group (Société Générale de Surveillance)

*This document is issued by the Company under its General Conditions of Service accessible at http://www.sgs.com/terms_and_conditions.htm. Attention is drawn to the limitation of liability, indemnification and jurisdiction issues defined therein.*

*Any holder of this document is advised that information contained hereon reflects the Company's findings at the time of its intervention only and within the limits of Client's instructions, if any. The Company's sole responsibility is to its Client and this document does not exonerate parties to a transaction from exercising all their rights and obligations under the transaction documents. Any unauthorized alteration, forgery or falsification of the content or appearance of this document is unlawful and offenders may be prosecuted to the fullest extent of the law*

# Analysis Report

October 02, 2013

**PACIFICORP**
FIELD OFFICE
PO BOX 1005
HUNTINGTON UT 84528



| | | | |
|---|---|---|---|
| Client Sample ID: | Deer Creek Mine | Sample ID By: | PacifiCorp |
| Date Sampled: | Sep 18, 2013 | Sample Taken By: | VBJ |
| Date Received: | Sep 18, 2013 | Time Received: | 1608 |
| Product Description: | WATER | Time Sampled: | 1230 |
| | | Location: | 11 W #2 SEAL |
| | | Mine: | 4 |
| | | Field - pH: | 7.35 pH units |
| | | Field - Flow: | 5 GPM |
| | | Field - Temperature: | 15.4 DEG. C |

Comments: Dissolved Metals Filtered at Lab

**SGS Minerals Sample ID: 782-1321130-003**

| TESTS | RESULT | UNIT | METHOD | REPORTING LIMIT | ANALYZED DATE | TIME | ANALYST |
|---|---|---|---|---|---|---|---|
| **METALS BY ICP (continued)** | | | | | | | |
| Manganese, Mn - Dissolved | 0.074 | mg/L | EPA 200.7 | 0.002 | 2013-09-25 | 15:40:00 | CM |
| Potassium, K - Dissolved | 9.81 | mg/L | EPA 200.7 | 0.14 | 2013-09-25 | 15:40:00 | CM |
| Sodium, Na - Dissolved | 87.17 | mg/L | EPA 200.7 | 0.09 | 2013-09-25 | 15:40:00 | CM |

Lab Supervisor

Domenic Ibanez
Lab Supervisor

SGS North America Inc. | Minerals Services Division
2035 North Airport Road Huntington UT 84528 t (435) 653-2311 f (435)-653-2436 www.sgs.com/minerals

Member of the SGS Group (Société Générale de Surveillance)

*This document is issued by the Company under its General Conditions of Service accessible at http://www.sgs.com/terms_and_conditions.htm. Attention is drawn to the limitation of liability, indemnification and jurisdiction issues defined therein.*

*Any holder of this document is advised that information contained hereon reflects the Company's findings at the time of its intervention only and within the limits of Client's instructions, if any. The Company's sole responsibility is to its Client and this document does not exonerate parties to a transaction from exercising all their rights and obligations under the transaction documents. Any unauthorized alteration, forgery or falsification of the content or appearance of this document is unlawful and offenders may be prosecuted to the fullest extent of the law*

# Analysis Report

October 02, 2013

**PACIFICORP**
FIELD OFFICE
PO BOX 1005
HUNTINGTON UT 84528



| | | | |
|---|---|---|---|
| Client Sample ID: | Deer Creek Mine | Sample ID By: | PacifiCorp |
| Date Sampled: | Sep 18, 2013 | Sample Taken By: | VBJ |
| Date Received: | Sep 18, 2013 | Time Received: | 1608 |
| Product Description: | WATER | Time Sampled: | 1258 |
| | | Location: | 17 W #2 SEAL |
| | | Mine: | 4 |
| | | Field - pH: | 7.8 pH units |
| | | Field - Temperature: | 12.9 DEG. C |

Comments: Dissolved Metals Filtered at Lab

**SGS Minerals Sample ID: 782-1321130-004**

| TESTS | RESULT | UNIT | METHOD | REPORTING LIMIT | ANALYZED DATE | ANALYZED TIME | ANALYST |
|---|---|---|---|---|---|---|---|
| Hardness, mg equivalent CaCO3/L | 346 | mg/L | SM2340-B | 1 | 2013-09-30 | 17:33:53 | CM |
| Acidity | 8 | mg/L | D1067 | 5 | 2013-09-30 | 08:10:00 | CM |
| Anions | 10.19 | meq/L | SM1030E | 0 | 2013-09-30 | 17:33:53 | CM |
| Balance | -0.11 | % | SM1030E | -10 | 2013-09-30 | 17:33:53 | CM |
| Cations | 9.97 | meq/L | SM1030E | 0 | 2013-09-30 | 17:33:53 | CM |
| Alkalinity, mg CaCO3/L (pH 4.5) | 363 | mg/L | SM2320-B | 5 | 2013-09-24 | 11:50:00 | AL |
| Bicarbonate Alkalinity as CaCO3 | 363 | mg/L | SM2320-B | 5 | 2013-09-24 | 11:50:00 | AL |
| Carbonate Alkalinity as CaCO3 | <5 | mg/L | SM2320-B | 5 | 2013-09-24 | 11:50:00 | AL |
| pH | 7.49 | | SM4500-H | 0.01 | 2013-09-19 | 08:10:00 | CM |
| pH Temperature | 20.70 | °C | SM4500-H | 0.01 | 2013-09-19 | 08:10:00 | CM |
| Conductivity | 946 | µmhos/cm | SM2510 | 0.1 | 2013-09-19 | 08:10:00 | CM |
| Total Dissolved Solids | 547 | mg/L | SM2540-C | 30 | 2013-09-19 | 13:45:00 | CM |
| Chloride, Cl | 12 | mg/L | EPA 300.0 | 1 | 2013-09-24 | 00:10:00 | CM |
| Sulfate, SO4 | 125 | mg/L | EPA 300.0 | 1 | 2013-09-24 | 00:10:00 | CM |
| **METALS BY ICP** | | | | | | | |
| Calcium, Ca - Dissolved | 66.07 | mg/L | EPA 200.7 | 0.03 | 2013-09-25 | 15:40:00 | CM |
| Iron, Fe - Total | 2.72 | mg/L | EPA 200.7 | 0.05 | 2013-09-27 | 12:57:00 | CM |
| Iron, Fe - Dissolved | <0.03 | mg/L | EPA 200.7 | 0.03 | 2013-09-25 | 15:40:00 | CM |
| Magnesium, Mg - Dissolved | 43.91 | mg/L | EPA 200.7 | 0.01 | 2013-09-25 | 15:40:00 | CM |
| Manganese, Mn - Total | 0.025 | mg/L | EPA 200.7 | 0.002 | 2013-09-27 | 12:57:00 | CM |
| Manganese, Mn - Dissolved | 0.023 | mg/L | EPA 200.7 | 0.002 | 2013-09-25 | 15:40:00 | CM |

Lab Supervisor

Domenic Ibanez
Lab Supervisor

SGS North America Inc. | Minerals Services Division
2035 North Airport Road Huntington UT 84528 t (435) 653-2311 f (435)-653-2436 www.sgs.com/minerals

Member of the SGS Group (Société Générale de Surveillance)

*This document is issued by the Company under its General Conditions of Service accessible at http://www.sgs.com/terms_and_conditions.htm. Attention is drawn to the limitation of liability, indemnification and jurisdiction issues defined therein.*

*Any holder of this document is advised that information contained hereon reflects the Company's findings at the time of its intervention only and within the limits of Client's instructions, if any. The Company's sole responsibility is to its Client and this document does not exonerate parties to a transaction from exercising all their rights and obligations under the transaction documents. Any unauthorized alteration, forgery or falsification of the content or appearance of this document is unlawful and offenders may be prosecuted to the fullest extent of the law*

# Analysis Report

October 02, 2013

**PACIFICORP**
FIELD OFFICE
PO BOX 1005
HUNTINGTON UT 84528



| | | | |
|---|---|---|---|
| Client Sample ID: | Deer Creek Mine | Sample ID By: | PacifiCorp |
| Date Sampled: | Sep 18, 2013 | Sample Taken By: | VBJ |
| Date Received: | Sep 18, 2013 | Time Received: | 1608 |
| Product Description: | WATER | Time Sampled: | 1258 |
| | | Location: | 17 W #2 SEAL |
| | | Mine: | 4 |
| | | Field - pH: | 7.8 pH units |
| | | Field - Temperature: | 12.9 DEG. C |

Comments: Dissolved Metals Filtered at Lab

**SGS Minerals Sample ID: 782-1321130-004**

| TESTS | RESULT | UNIT | METHOD | REPORTING LIMIT | ANALYZED DATE | ANALYZED TIME | ANALYST |
|---|---|---|---|---|---|---|---|
| **METALS BY ICP (continued)** | | | | | | | |
| Potassium, K - Dissolved | 10.89 | mg/L | EPA 200.7 | 0.14 | 2013-09-25 | 15:40:00 | CM |
| Sodium, Na - Dissolved | 63.97 | mg/L | EPA 200.7 | 0.09 | 2013-09-25 | 15:40:00 | CM |

Lab Supervisor

Domenic Ibanez
Lab Supervisor

SGS North America Inc. | Minerals Services Division
2035 North Airport Road Huntington UT 84528 t (435) 653-2311 f (435)-653-2436 www.sgs.com/minerals

Member of the SGS Group (Société Générale de Surveillance)

*This document is issued by the Company under its General Conditions of Service accessible at http://www.sgs.com/terms_and_conditions.htm. Attention is drawn to the limitation of liability, indemnification and jurisdiction issues defined therein.*

*Any holder of this document is advised that information contained hereon reflects the Company's findings at the time of its intervention only and within the limits of Client's instructions, if any. The Company's sole responsibility is to its Client and this document does not exonerate parties to a transaction from exercising all their rights and obligations under the transaction documents. Any unauthorized alteration, forgery or falsification of the content or appearance of this document is unlawful and offenders may be prosecuted to the fullest extent of the law*

# Analysis Report

October 02, 2013

**PACIFICORP**
FIELD OFFICE
PO BOX 1005
HUNTINGTON UT 84528



| | | | |
|---|---|---|---|
| Client Sample ID: | Deer Creek Mine | Sample ID By: | PacifiCorp |
| Date Sampled: | Sep 18, 2013 | Sample Taken By: | VBJ |
| Date Received: | Sep 18, 2013 | Time Received: | 1608 |
| Product Description: | WATER | Time Sampled: | 1322 |
| | | Location: | 10 N XC-5 BOREHOLE |
| | | Mine: | 4 |
| | | Field - pH: | 7.66 pH units |
| | | Field - Flow: | ~50 GPM |
| | | Field - Temperature: | 12.0 DEG. C |

Comments: Dissolved Metals Filtered at Lab

**SGS Minerals Sample ID: 782-1321130-005**

| TESTS | RESULT | UNIT | METHOD | REPORTING LIMIT | ANALYZED DATE | ANALYZED TIME | ANALYST |
|---|---|---|---|---|---|---|---|
| Hardness, mg equivalent CaCO3/L | 368 | mg/L | SM2340-B | 1 | 2013-09-30 | 17:33:53 | CM |
| Acidity | 15 | mg/L | D1067 | 5 | 2013-09-30 | 08:10:00 | CM |
| Anions | 13.28 | meq/L | SM1030E | 0 | 2013-09-30 | 17:33:53 | CM |
| Balance | -0.53 | % | SM1030E | -10 | 2013-09-30 | 17:33:53 | CM |
| Cations | 13.13 | meq/L | SM1030E | 0 | 2013-09-30 | 17:33:53 | CM |
| Alkalinity, mg CaCO3/L (pH 4.5) | 471 | mg/L | SM2320-B | 5 | 2013-09-24 | 11:50:00 | AL |
| Bicarbonate Alkalinity as CaCO3 | 471 | mg/L | SM2320-B | 5 | 2013-09-24 | 11:50:00 | AL |
| Carbonate Alkalinity as CaCO3 | <5 | mg/L | SM2320-B | 5 | 2013-09-24 | 11:50:00 | AL |
| pH | 7.41 | | SM4500-H | 0.01 | 2013-09-19 | 08:14:00 | CM |
| pH Temperature | 20.80 | °C | SM4500-H | 0.01 | 2013-09-19 | 08:14:00 | CM |
| Conductivity | 1214 | µmhos/cm | SM2510 | 0.1 | 2013-09-19 | 08:10:00 | CM |
| Total Dissolved Solids | 725 | mg/L | SM2540-C | 30 | 2013-09-19 | 13:45:00 | CM |
| Chloride, Cl | 7 | mg/L | EPA 300.0 | 1 | 2013-09-24 | 00:10:00 | CM |
| Sulfate, SO4 | 176 | mg/L | EPA 300.0 | 1 | 2013-09-24 | 00:10:00 | CM |
| **METALS BY ICP** | | | | | | | |
| Calcium, Ca - Dissolved | 73.23 | mg/L | EPA 200.7 | 0.03 | 2013-09-25 | 15:40:00 | CM |
| Iron, Fe - Total | <0.05 | mg/L | EPA 200.7 | 0.05 | 2013-09-27 | 12:57:00 | CM |
| Iron, Fe - Dissolved | <0.03 | mg/L | EPA 200.7 | 0.03 | 2013-09-25 | 15:40:00 | CM |
| Magnesium, Mg - Dissolved | 44.98 | mg/L | EPA 200.7 | 0.01 | 2013-09-25 | 15:40:00 | CM |
| Manganese, Mn - Total | 0.002 | mg/L | EPA 200.7 | 0.002 | 2013-09-27 | 12:57:00 | CM |

Lab Supervisor

Domenic Ibanez
Lab Supervisor

SGS North America Inc. | Minerals Services Division
2035 North Airport Road Huntington UT 84528 t (435) 653-2311 f (435)-653-2436 www.sgs.com/minerals

Member of the SGS Group (Société Générale de Surveillance)

*This document is issued by the Company under its General Conditions of Service accessible at http://www.sgs.com/terms_and_conditions.htm. Attention is drawn to the limitation of liability, indemnification and jurisdiction issues defined therein.*

*Any holder of this document is advised that information contained hereon reflects the Company's findings at the time of its intervention only and within the limits of Client's instructions, if any. The Company's sole responsibility is to its Client and this document does not exonerate parties to a transaction from exercising all their rights and obligations under the transaction documents. Any unauthorized alteration, forgery or falsification of the content or appearance of this document is unlawful and offenders may be prosecuted to the fullest extent of the law*

SGS

# Analysis Report

October 02, 2013

**PACIFICORP**
FIELD OFFICE
PO BOX 1005
HUNTINGTON UT 84528



| | | | |
|---|---|---|---|
| Client Sample ID: | Deer Creek Mine | Sample ID By: | PacifiCorp |
| Date Sampled: | Sep 18, 2013 | Sample Taken By: | VBJ |
| Date Received: | Sep 18, 2013 | Time Received: | 1608 |
| Product Description: | WATER | Time Sampled: | 1322 |
| | | Location: | 10 N XC-5 BOREHOLE |
| | | Mine: | 4 |
| | | Field - pH: | 7.66 pH units |
| | | Field - Flow: | ~50 GPM |
| | | Field - Temperature: | 12.0 DEG. C |

Comments: Dissolved Metals Filtered at Lab

**SGS Minerals Sample ID: 782-1321130-005**

| TESTS | RESULT | UNIT | METHOD | REPORTING LIMIT | ANALYZED DATE | ANALYZED TIME | ANALYST |
|---|---|---|---|---|---|---|---|
| **METALS BY ICP (continued)** | | | | | | | |
| Manganese, Mn - Dissolved | <0.002 | mg/L | EPA 200.7 | 0.002 | 2013-09-25 | 15:40:00 | CM |
| Potassium, K - Dissolved | 10.65 | mg/L | EPA 200.7 | 0.14 | 2013-09-25 | 15:40:00 | CM |
| Sodium, Na - Dissolved | 126.62 | mg/L | EPA 200.7 | 0.09 | 2013-09-25 | 15:40:00 | CM |

Lab Supervisor

Domenic Ibanez
Lab Supervisor

SGS North America Inc. | Minerals Services Division
2035 North Airport Road Huntington UT 84528 t (435) 653-2311 f (435)-653-2436 www.sgs.com/minerals

Member of the SGS Group (Société Générale de Surveillance)

*This document is issued by the Company under its General Conditions of Service accessible at http://www.sgs.com/terms_and_conditions.htm. Attention is drawn to the limitation of liability, indemnification and jurisdiction issues defined therein.*

*Any holder of this document is advised that information contained hereon reflects the Company's findings at the time of its intervention only and within the limits of Client's instructions, if any. The Company's sole responsibility is to its Client and this document does not exonerate parties to a transaction from exercising all their rights and obligations under the transaction documents. Any unauthorized alteration, forgery or falsification of the content or appearance of this document is unlawful and offenders may be prosecuted to the fullest extent of the law*

# Analysis Report

October 02, 2013

**PACIFICORP**
FIELD OFFICE
PO BOX 1005
HUNTINGTON UT 84528



| | | | |
|---|---|---|---|
| Client Sample ID: | Deer Creek Mine | Sample ID By: | PacifiCorp |
| Date Sampled: | Sep 18, 2013 | Sample Taken By: | VBJ |
| Date Received: | Sep 18, 2013 | Time Received: | 1608 |
| Product Description: | WATER | Time Sampled: | 1403 |
| | | Location: | 3 N 00 SUMP |
| | | Mine: | 4 |
| | | Field - pH: | 7.55 pH units |
| | | Field - Temperature: | 12.9 DEG. C |

Comments: Dissolved Metals Filtered at Lab

**SGS Minerals Sample ID: 782-1321130-006**

| TESTS | RESULT | UNIT | METHOD | REPORTING LIMIT | ANALYZED DATE | ANALYZED TIME | ANALYST |
|---|---|---|---|---|---|---|---|
| Hardness, mg equivalent CaCO3/L | 358 | mg/L | SM2340-B | 1 | 2013-09-30 | 17:33:53 | CM |
| Acidity | 17 | mg/L | D1067 | 5 | 2013-09-30 | 08:10:00 | CM |
| Anions | 8.12 | meq/L | SM1030E | 0 | 2013-09-30 | 17:33:53 | CM |
| Balance | -0.35 | % | SM1030E | -10 | 2013-09-30 | 17:33:53 | CM |
| Cations | 8.07 | meq/L | SM1030E | 0 | 2013-09-30 | 17:33:53 | CM |
| Alkalinity, mg CaCO3/L (pH 4.5) | 343 | mg/L | SM2320-B | 5 | 2013-09-24 | 11:50:00 | AL |
| Bicarbonate Alkalinity as CaCO3 | 343 | mg/L | SM2320-B | 5 | 2013-09-24 | 11:50:00 | AL |
| Carbonate Alkalinity as CaCO3 | <5 | mg/L | SM2320-B | 5 | 2013-09-24 | 11:50:00 | AL |
| pH | 7.21 | | SM4500-H | 0.01 | 2013-09-19 | 08:16:00 | CM |
| pH Temperature | 20.90 | °C | SM4500-H | 0.01 | 2013-09-19 | 08:16:00 | CM |
| Conductivity | 742 | µmhos/cm | SM2510 | 0.1 | 2013-09-19 | 08:10:00 | CM |
| Total Dissolved Solids | 393 | mg/L | SM2540-C | 30 | 2013-09-19 | 13:45:00 | CM |
| Chloride, Cl | 7 | mg/L | EPA 300.0 | 1 | 2013-09-24 | 00:10:00 | CM |
| Sulfate, SO4 | 52 | mg/L | EPA 300.0 | 1 | 2013-09-24 | 00:10:00 | CM |
| **METALS BY ICP** | | | | | | | |
| Calcium, Ca - Dissolved | 75.63 | mg/L | EPA 200.7 | 0.03 | 2013-09-25 | 15:40:00 | CM |
| Iron, Fe - Total | 2.01 | mg/L | EPA 200.7 | 0.05 | 2013-09-27 | 12:57:00 | CM |
| Iron, Fe - Dissolved | <0.03 | mg/L | EPA 200.7 | 0.03 | 2013-09-25 | 15:40:00 | CM |
| Magnesium, Mg - Dissolved | 41.16 | mg/L | EPA 200.7 | 0.01 | 2013-09-25 | 15:40:00 | CM |
| Manganese, Mn - Total | 0.024 | mg/L | EPA 200.7 | 0.002 | 2013-09-27 | 12:57:00 | CM |
| Manganese, Mn - Dissolved | <0.002 | mg/L | EPA 200.7 | 0.002 | 2013-09-25 | 15:40:00 | CM |

Lab Supervisor

Domenic Ibanez
Lab Supervisor

SGS North America Inc. | Minerals Services Division
2035 North Airport Road Huntington UT 84528 t (435) 653-2311 f (435)-653-2436 www.sgs.com/minerals

Member of the SGS Group (Société Générale de Surveillance)

*This document is issued by the Company under its General Conditions of Service accessible at http://www.sgs.com/terms_and_conditions.htm. Attention is drawn to the limitation of liability, indemnification and jurisdiction issues defined therein.*

*Any holder of this document is advised that information contained hereon reflects the Company's findings at the time of its intervention only and within the limits of Client's instructions, if any. The Company's sole responsibility is to its Client and this document does not exonerate parties to a transaction from exercising all their rights and obligations under the transaction documents. Any unauthorized alteration, forgery or falsification of the content or appearance of this document is unlawful and offenders may be prosecuted to the fullest extent of the law*

# Analysis Report

October 02, 2013

**PACIFICORP**
FIELD OFFICE
PO BOX 1005
HUNTINGTON UT 84528



| | | | |
|---|---|---|---|
| Client Sample ID: | Deer Creek Mine | Sample ID By: | PacifiCorp |
| Date Sampled: | Sep 18, 2013 | Sample Taken By: | VBJ |
| Date Received: | Sep 18, 2013 | Time Received: | 1608 |
| Product Description: | WATER | Time Sampled: | 1403 |
| | | Location: | 3 N 00 SUMP |
| | | Mine: | 4 |
| | | Field - pH: | 7.55 pH units |
| | | Field - Temperature: | 12.9 DEG. C |

Comments: Dissolved Metals Filtered at Lab

**SGS Minerals Sample ID: 782-1321130-006**

| TESTS | RESULT | UNIT | METHOD | REPORTING LIMIT | ANALYZED DATE | ANALYZED TIME | ANALYST |
|---|---|---|---|---|---|---|---|
| **METALS BY ICP (continued)** | | | | | | | |
| Potassium, K - Dissolved | 4.46 | mg/L | EPA 200.7 | 0.14 | 2013-09-25 | 15:40:00 | CM |
| Sodium, Na - Dissolved | 18.21 | mg/L | EPA 200.7 | 0.09 | 2013-09-25 | 15:40:00 | CM |

Lab Supervisor

Domenic Ibanez
Lab Supervisor

SGS North America Inc. | Minerals Services Division
2035 North Airport Road Huntington UT 84528 t (435) 653-2311 f (435)-653-2436 www.sgs.com/minerals

Member of the SGS Group (Société Générale de Surveillance)

*This document is issued by the Company under its General Conditions of Service accessible at http://www.sgs.com/terms_and_conditions.htm. Attention is drawn to the limitation of liability, indemnification and jurisdiction issues defined therein.*

*Any holder of this document is advised that information contained hereon reflects the Company's findings at the time of its intervention only and within the limits of Client's instructions, if any. The Company's sole responsibility is to its Client and this document does not exonerate parties to a transaction from exercising all their rights and obligations under the transaction documents. Any unauthorized alteration, forgery or falsification of the content or appearance of this document is unlawful and offenders may be prosecuted to the fullest extent of the law*

# Analysis Report

October 23, 2013

**PACIFICORP**
FIELD OFFICE
PO BOX 1005
HUNTINGTON UT 84528



| | | | |
|---|---|---|---|
| Client Sample ID: | Deer Creek Mine | Sample ID By: | PacifiCorp |
| Date Sampled: | Oct 11, 2013 | Sample Taken By: | VBJ |
| Date Received: | Oct 11, 2013 | Time Received: | 1500 |
| Product Description: | WATER | Time Sampled: | 1000 |
| | | Location: | 11 W #2 SEAL |
| | | Mine: | 4 |
| | | Field - pH: | 7.12 pH units |
| | | Field - Flow: | 5 GPM |
| | | Field - Temperature: | 15.6 DEG. C |

Comments: Dissolved Metals Filtered at Lab

**SGS Minerals Sample ID: 782-1321513-001**

| TESTS | RESULT | UNIT | METHOD | REPORTING LIMIT | ANALYZED DATE | ANALYZED TIME | ANALYST |
|---|---|---|---|---|---|---|---|
| Hardness, mg equivalent CaCO3/L | 289 | mg/L | SM2340-B | 1 | 2013-10-23 | 09:43:11 | AL |
| Acidity | 33 | mg/L | D1067 | 5 | 2013-10-18 | 12:00:00 | CM |
| Anions | 9.73 | meq/L | SM1030E | 0 | 2013-10-23 | 09:43:11 | AL |
| Balance | 0.37 | % | SM1030E | -10 | 2013-10-23 | 09:43:11 | AL |
| Cations | 9.80 | meq/L | SM1030E | 0 | 2013-10-23 | 09:43:11 | AL |
| Alkalinity, mg CaCO3/L (pH 4.5) | 439 | mg/L | SM2320-B | 5 | 2013-10-22 | 08:30:00 | CM |
| Bicarbonate Alkalinity as CaCO3 | 439 | mg/L | SM2320-B | 5 | 2013-10-22 | 08:30:00 | CM |
| Carbonate Alkalinity as CaCO3 | <5 | mg/L | SM2320-B | 5 | 2013-10-22 | 08:30:00 | CM |
| pH | 7.17 | | SM4500-H | 0.01 | 2013-10-11 | 15:22:00 | CM |
| pH Temperature | 12.20 | °C | SM4500-H | 0.01 | 2013-10-11 | 15:22:00 | CM |
| Conductivity | 881 | µmhos/cm | SM2510 | 0.1 | 2013-10-11 | 15:25:00 | CM |
| Total Dissolved Solids | 520 | mg/L | SM2540-C | 30 | 2013-10-15 | 15:00:00 | AL |
| Chloride, Cl | 8 | mg/L | EPA 300.0 | 1 | 2013-10-15 | 19:57:00 | CM |
| Sulfate, SO4 | 35 | mg/L | EPA 300.0 | 1 | 2013-10-15 | 19:57:00 | CM |
| **METALS BY ICP** | | | | | | | |
| Calcium, Ca - Dissolved | 74.07 | mg/L | EPA 200.7 | 0.03 | 2013-10-14 | 22:32:00 | CM |
| Iron, Fe - Total | 0.97 | mg/L | EPA 200.7 | 0.05 | 2013-10-16 | 15:55:00 | CM |
| Iron, Fe - Dissolved | <0.03 | mg/L | EPA 200.7 | 0.03 | 2013-10-14 | 22:32:00 | CM |
| Magnesium, Mg - Dissolved | 25.26 | mg/L | EPA 200.7 | 0.01 | 2013-10-14 | 22:32:00 | CM |
| Manganese, Mn - Total | 0.084 | mg/L | EPA 200.7 | 0.002 | 2013-10-16 | 15:55:00 | CM |

Lab Supervisor

Domenic Ibanez
Lab Supervisor

SGS North America Inc. | Minerals Services Division
2035 North Airport Road Huntington UT 84528 t (435) 653-2311 f (435)-653-2436 www.sgs.com/minerals

Member of the SGS Group (Société Générale de Surveillance)

*This document is issued by the Company under its General Conditions of Service accessible at http://www.sgs.com/terms_and_conditions.htm. Attention is drawn to the limitation of liability, indemnification and jurisdiction issues defined therein.*

*Any holder of this document is advised that information contained hereon reflects the Company's findings at the time of its intervention only and within the limits of Client's instructions, if any. The Company's sole responsibility is to its Client and this document does not exonerate parties to a transaction from exercising all their rights and obligations under the transaction documents. Any unauthorized alteration, forgery or falsification of the content or appearance of this document is unlawful and offenders may be prosecuted to the fullest extent of the law*

# Analysis Report

October 23, 2013

**PACIFICORP**
FIELD OFFICE
PO BOX 1005
HUNTINGTON UT 84528



| | | | |
|---|---|---|---|
| Client Sample ID: | Deer Creek Mine | Sample ID By: | PacifiCorp |
| Date Sampled: | Oct 11, 2013 | Sample Taken By: | VBJ |
| Date Received: | Oct 11, 2013 | Time Received: | 1500 |
| Product Description: | WATER | Time Sampled: | 1000 |
| | | Location: | 11 W #2 SEAL |
| | | Mine: | 4 |
| | | Field - pH: | 7.12 pH units |
| | | Field - Flow: | 5 GPM |
| | | Field - Temperature: | 15.6 DEG. C |

Comments: Dissolved Metals Filtered at Lab

**SGS Minerals Sample ID: 782-1321513-001**

| TESTS | RESULT | UNIT | METHOD | REPORTING LIMIT | ANALYZED DATE | ANALYZED TIME | ANALYST |
|---|---|---|---|---|---|---|---|
| **METALS BY ICP (continued)** | | | | | | | |
| Manganese, Mn - Dissolved | 0.080 | mg/L | EPA 200.7 | 0.002 | 2013-10-14 | 22:32:00 | CM |
| Potassium, K - Dissolved | 9.54 | mg/L | EPA 200.7 | 0.14 | 2013-10-14 | 22:32:00 | CM |
| Sodium, Na - Dissolved | 86.95 | mg/L | EPA 200.7 | 0.09 | 2013-10-14 | 22:32:00 | CM |

Lab Supervisor

Domenic Ibanez
Lab Supervisor

SGS North America Inc. | Minerals Services Division
2035 North Airport Road Huntington UT 84528 t (435) 653-2311 f (435)-653-2436 www.sgs.com/minerals

Member of the SGS Group (Société Générale de Surveillance)

*This document is issued by the Company under its General Conditions of Service accessible at http://www.sgs.com/terms_and_conditions.htm. Attention is drawn to the limitation of liability, indemnification and jurisdiction issues defined therein.*

*Any holder of this document is advised that information contained hereon reflects the Company's findings at the time of its intervention only and within the limits of Client's instructions, if any. The Company's sole responsibility is to its Client and this document does not exonerate parties to a transaction from exercising all their rights and obligations under the transaction documents. Any unauthorized alteration, forgery or falsification of the content or appearance of this document is unlawful and offenders may be prosecuted to the fullest extent of the law*

SGS

# Analysis Report

October 23, 2013

**PACIFICORP**
FIELD OFFICE
PO BOX 1005
HUNTINGTON UT 84528



| | | | |
|---|---|---|---|
| Client Sample ID: | Deer Creek Mine | Sample ID By: | PacifiCorp |
| Date Sampled: | Oct 11, 2013 | Sample Taken By: | VBJ |
| Date Received: | Oct 11, 2013 | Time Received: | 1500 |
| Product Description: | WATER | Time Sampled: | 1022 |
| | | Location: | 17 W #2 SEAL |
| | | Mine: | 4 |
| | | Field - pH: | 7.31 pH units |
| | | Field - Temperature: | 12.6 DEG. C |

Comments: Dissolved Metals Filtered at Lab

**SGS Minerals Sample ID: 782-1321513-002**

| TESTS | RESULT | UNIT | METHOD | REPORTING LIMIT | ANALYZED DATE | ANALYZED TIME | ANALYST |
|---|---|---|---|---|---|---|---|
| Hardness, mg equivalent CaCO3/L | 340 | mg/L | SM2340-B | 1 | 2013-10-23 | 09:43:11 | AL |
| Acidity | 21 | mg/L | D1067 | 5 | 2013-10-18 | 12:00:00 | CM |
| Anions | 9.94 | meq/L | SM1030E | 0 | 2013-10-23 | 09:43:11 | AL |
| Balance | -0.75 | % | SM1030E | -10 | 2013-10-23 | 09:43:11 | AL |
| Cations | 9.79 | meq/L | SM1030E | 0 | 2013-10-23 | 09:43:11 | AL |
| Alkalinity, mg CaCO3/L (pH 4.5) | 352 | mg/L | SM2320-B | 5 | 2013-10-22 | 08:30:00 | CM |
| Bicarbonate Alkalinity as CaCO3 | 352 | mg/L | SM2320-B | 5 | 2013-10-22 | 08:30:00 | CM |
| Carbonate Alkalinity as CaCO3 | <5 | mg/L | SM2320-B | 5 | 2013-10-22 | 08:30:00 | CM |
| pH | 7.33 | | SM4500-H | 0.01 | 2013-10-11 | 15:24:00 | CM |
| pH Temperature | 11.70 | °C | SM4500-H | 0.01 | 2013-10-11 | 15:24:00 | CM |
| Conductivity | 913 | µmhos/cm | SM2510 | 0.1 | 2013-10-11 | 15:25:00 | CM |
| Total Dissolved Solids | 547 | mg/L | SM2540-C | 30 | 2013-10-15 | 15:00:00 | AL |
| Chloride, Cl | 12 | mg/L | EPA 300.0 | 1 | 2013-10-15 | 19:57:00 | CM |
| Sulfate, SO4 | 123 | mg/L | EPA 300.0 | 1 | 2013-10-15 | 19:57:00 | CM |
| **METALS BY ICP** | | | | | | | |
| Calcium, Ca - Dissolved | 64.84 | mg/L | EPA 200.7 | 0.03 | 2013-10-14 | 22:32:00 | CM |
| Iron, Fe - Total | 2.54 | mg/L | EPA 200.7 | 0.05 | 2013-10-16 | 15:55:00 | CM |
| Iron, Fe - Dissolved | <0.03 | mg/L | EPA 200.7 | 0.03 | 2013-10-14 | 22:32:00 | CM |
| Magnesium, Mg - Dissolved | 43.20 | mg/L | EPA 200.7 | 0.01 | 2013-10-14 | 22:32:00 | CM |
| Manganese, Mn - Total | 0.025 | mg/L | EPA 200.7 | 0.002 | 2013-10-16 | 15:55:00 | CM |
| Manganese, Mn - Dissolved | 0.021 | mg/L | EPA 200.7 | 0.002 | 2013-10-14 | 22:32:00 | CM |

Lab Supervisor

Domenic Ibanez
Lab Supervisor

SGS North America Inc. | Minerals Services Division
2035 North Airport Road Huntington UT 84528 t (435) 653-2311 f (435)-653-2436 www.sgs.com/minerals

Member of the SGS Group (Société Générale de Surveillance)

*This document is issued by the Company under its General Conditions of Service accessible at http://www.sgs.com/terms_and_conditions.htm. Attention is drawn to the limitation of liability, indemnification and jurisdiction issues defined therein.*

*Any holder of this document is advised that information contained hereon reflects the Company's findings at the time of its intervention only and within the limits of Client's instructions, if any. The Company's sole responsibility is to its Client and this document does not exonerate parties to a transaction from exercising all their rights and obligations under the transaction documents. Any unauthorized alteration, forgery or falsification of the content or appearance of this document is unlawful and offenders may be prosecuted to the fullest extent of the law*

# Analysis Report

October 23, 2013

**PACIFICORP**
FIELD OFFICE
PO BOX 1005
HUNTINGTON UT 84528



| | | | |
|---|---|---|---|
| Client Sample ID: | Deer Creek Mine | Sample ID By: | PacifiCorp |
| Date Sampled: | Oct 11, 2013 | Sample Taken By: | VBJ |
| Date Received: | Oct 11, 2013 | Time Received: | 1500 |
| Product Description: | WATER | Time Sampled: | 1022 |
| | | Location: | 17 W #2 SEAL |
| | | Mine: | 4 |
| | | Field - pH: | 7.31 pH units |
| | | Field - Temperature: | 12.6 DEG. C |

Comments: Dissolved Metals Filtered at Lab

**SGS Minerals Sample ID: 782-1321513-002**

| TESTS | RESULT | UNIT | METHOD | REPORTING LIMIT | ANALYZED DATE | ANALYZED TIME | ANALYST |
|---|---|---|---|---|---|---|---|
| **METALS BY ICP (continued)** | | | | | | | |
| Potassium, K - Dissolved | 10.54 | mg/L | EPA 200.7 | 0.14 | 2013-10-14 | 22:32:00 | CM |
| Sodium, Na - Dissolved | 62.88 | mg/L | EPA 200.7 | 0.09 | 2013-10-14 | 22:32:00 | CM |

Lab Supervisor

Domenic Ibanez
Lab Supervisor

SGS North America Inc. | Minerals Services Division
2035 North Airport Road Huntington UT 84528 t (435) 653-2311 f (435)-653-2436 www.sgs.com/minerals

Member of the SGS Group (Société Générale de Surveillance)

*This document is issued by the Company under its General Conditions of Service accessible at http://www.sgs.com/terms_and_conditions.htm. Attention is drawn to the limitation of liability, indemnification and jurisdiction issues defined therein.*

*Any holder of this document is advised that information contained hereon reflects the Company's findings at the time of its intervention only and within the limits of Client's instructions, if any. The Company's sole responsibility is to its Client and this document does not exonerate parties to a transaction from exercising all their rights and obligations under the transaction documents. Any unauthorized alteration, forgery or falsification of the content or appearance of this document is unlawful and offenders may be prosecuted to the fullest extent of the law*

# Analysis Report

October 23, 2013

**PACIFICORP**
FIELD OFFICE
PO BOX 1005
HUNTINGTON UT 84528



| | | | |
|---|---|---|---|
| Client Sample ID: | Deer Creek Mine | Sample ID By: | PacifiCorp |
| Date Sampled: | Oct 11, 2013 | Sample Taken By: | VBJ |
| Date Received: | Oct 11, 2013 | Time Received: | 1500 |
| Product Description: | WATER | Time Sampled: | 1147 |
| | | Location: | 10 N XC-5 BOREHOLE |
| | | Mine: | 4 |
| | | Field - pH: | 7.38 pH units |
| | | Field - Flow: | ~50 GPM |
| | | Field - Temperature: | 11.7 DEG. C |

Comments: Dissolved Metals Filtered at Lab

**SGS Minerals Sample ID: 782-1321513-003**

| TESTS | RESULT | UNIT | METHOD | REPORTING LIMIT | ANALYZED DATE | ANALYZED TIME | ANALYST |
|---|---|---|---|---|---|---|---|
| Hardness, mg equivalent CaCO3/L | 369 | mg/L | SM2340-B | 1 | 2013-10-23 | 09:43:11 | AL |
| Acidity | 24 | mg/L | D1067 | 5 | 2013-10-18 | 12:00:00 | CM |
| Anions | 13.31 | meq/L | SM1030E | 0 | 2013-10-23 | 09:43:11 | AL |
| Balance | -0.78 | % | SM1030E | -10 | 2013-10-23 | 09:43:11 | AL |
| Cations | 13.11 | meq/L | SM1030E | 0 | 2013-10-23 | 09:43:11 | AL |
| Alkalinity, mg CaCO3/L (pH 4.5) | 469 | mg/L | SM2320-B | 5 | 2013-10-22 | 08:30:00 | CM |
| Bicarbonate Alkalinity as CaCO3 | 469 | mg/L | SM2320-B | 5 | 2013-10-22 | 08:30:00 | CM |
| Carbonate Alkalinity as CaCO3 | <5 | mg/L | SM2320-B | 5 | 2013-10-22 | 08:30:00 | CM |
| pH | 7.46 | | SM4500-H | 0.01 | 2013-10-11 | 15:26:00 | CM |
| pH Temperature | 12.40 | °C | SM4500-H | 0.01 | 2013-10-11 | 15:26:00 | CM |
| Conductivity | 1181 | µmhos/cm | SM2510 | 0.1 | 2013-10-11 | 15:25:00 | CM |
| Total Dissolved Solids | 728 | mg/L | SM2540-C | 30 | 2013-10-15 | 15:00:00 | AL |
| Chloride, Cl | 7 | mg/L | EPA 300.0 | 1 | 2013-10-15 | 19:57:00 | AL |
| Sulfate, SO4 | 180 | mg/L | EPA 300.0 | 1 | 2013-10-15 | 19:57:00 | AL |
| **METALS BY ICP** | | | | | | | |
| Calcium, Ca - Dissolved | 73.19 | mg/L | EPA 200.7 | 0.03 | 2013-10-14 | 22:32:00 | CM |
| Iron, Fe - Total | <0.05 | mg/L | EPA 200.7 | 0.05 | 2013-10-16 | 15:55:00 | CM |
| Iron, Fe - Dissolved | <0.03 | mg/L | EPA 200.7 | 0.03 | 2013-10-14 | 22:32:00 | CM |
| Magnesium, Mg - Dissolved | 45.23 | mg/L | EPA 200.7 | 0.01 | 2013-10-14 | 22:32:00 | CM |
| Manganese, Mn - Total | 0.002 | mg/L | EPA 200.7 | 0.002 | 2013-10-16 | 15:55:00 | CM |

Lab Supervisor

Domenic Ibanez
Lab Supervisor

SGS North America Inc. | Minerals Services Division
2035 North Airport Road Huntington UT 84528 t (435) 653-2311 f (435)-653-2436 www.sgs.com/minerals

Member of the SGS Group (Société Générale de Surveillance)

*This document is issued by the Company under its General Conditions of Service accessible at http://www.sgs.com/terms_and_conditions.htm. Attention is drawn to the limitation of liability, indemnification and jurisdiction issues defined therein.*

*Any holder of this document is advised that information contained hereon reflects the Company's findings at the time of its intervention only and within the limits of Client's instructions, if any. The Company's sole responsibility is to its Client and this document does not exonerate parties to a transaction from exercising all their rights and obligations under the transaction documents. Any unauthorized alteration, forgery or falsification of the content or appearance of this document is unlawful and offenders may be prosecuted to the fullest extent of the law*

SGS

# Analysis Report

October 23, 2013

**PACIFICORP**
FIELD OFFICE
PO BOX 1005
HUNTINGTON UT 84528



| | | | |
|---|---|---|---|
| Client Sample ID: | Deer Creek Mine | Sample ID By: | PacifiCorp |
| Date Sampled: | Oct 11, 2013 | Sample Taken By: | VBJ |
| Date Received: | Oct 11, 2013 | Time Received: | 1500 |
| Product Description: | WATER | Time Sampled: | 1147 |
| | | Location: | 10 N XC-5 BOREHOLE |
| | | Mine: | 4 |
| | | Field - pH: | 7.38 pH units |
| | | Field - Flow: | ~50 GPM |
| | | Field - Temperature: | 11.7 DEG. C |

Comments: Dissolved Metals Filtered at Lab

**SGS Minerals Sample ID: 782-1321513-003**

| TESTS | RESULT | UNIT | METHOD | REPORTING LIMIT | ANALYZED DATE | ANALYZED TIME | ANALYST |
|---|---|---|---|---|---|---|---|
| **METALS BY ICP (continued)** | | | | | | | |
| Manganese, Mn - Dissolved | <0.002 | mg/L | EPA 200.7 | 0.002 | 2013-10-14 | 22:32:00 | CM |
| Potassium, K - Dissolved | 10.31 | mg/L | EPA 200.7 | 0.14 | 2013-10-14 | 22:32:00 | CM |
| Sodium, Na - Dissolved | 125.80 | mg/L | EPA 200.7 | 0.09 | 2013-10-14 | 22:32:00 | CM |

Lab Supervisor

Domenic Ibanez
Lab Supervisor

SGS North America Inc. | Minerals Services Division
2035 North Airport Road Huntington UT 84528 t (435) 653-2311 f (435)-653-2436 www.sgs.com/minerals

Member of the SGS Group (Société Générale de Surveillance)

*This document is issued by the Company under its General Conditions of Service accessible at http://www.sgs.com/terms_and_conditions.htm. Attention is drawn to the limitation of liability, indemnification and jurisdiction issues defined therein.*

*Any holder of this document is advised that information contained hereon reflects the Company's findings at the time of its intervention only and within the limits of Client's instructions, if any. The Company's sole responsibility is to its Client and this document does not exonerate parties to a transaction from exercising all their rights and obligations under the transaction documents. Any unauthorized alteration, forgery or falsification of the content or appearance of this document is unlawful and offenders may be prosecuted to the fullest extent of the law*

SGS

# Analysis Report

October 23, 2013

**PACIFICORP**
FIELD OFFICE
PO BOX 1005
HUNTINGTON UT 84528



| | | | |
|---|---|---|---|
| Client Sample ID: | Deer Creek Mine | Sample ID By: | PacifiCorp |
| Date Sampled: | Oct 11, 2013 | Sample Taken By: | VBJ |
| Date Received: | Oct 11, 2013 | Time Received: | 1500 |
| Product Description: | WATER | Time Sampled: | 1232 |
| | | Location: | 3 N 00 |
| | | Mine: | 4 |
| | | Field - pH: | 7.17 pH units |
| | | Field - Temperature: | 12.7 DEG. C |

Comments: Dissolved Metals Filtered at Lab

**SGS Minerals Sample ID: 782-1321513-004**

| TESTS | RESULT | UNIT | METHOD | REPORTING LIMIT | ANALYZED DATE | ANALYZED TIME | ANALYST |
|---|---|---|---|---|---|---|---|
| Hardness, mg equivalent CaCO3/L | 364 | mg/L | SM2340-B | 1 | 2013-10-23 | 09:43:11 | AL |
| Acidity | 26 | mg/L | D1067 | 5 | 2013-10-18 | 12:00:00 | CM |
| Anions | 7.83 | meq/L | SM1030E | 0 | 2013-10-23 | 09:43:11 | AL |
| Balance | 2.15 | % | SM1030E | -10 | 2013-10-23 | 09:43:11 | AL |
| Cations | 8.17 | meq/L | SM1030E | 0 | 2013-10-23 | 09:43:11 | AL |
| Alkalinity, mg CaCO3/L (pH 4.5) | 329 | mg/L | SM2320-B | 5 | 2013-10-22 | 08:30:00 | CM |
| Bicarbonate Alkalinity as CaCO3 | 329 | mg/L | SM2320-B | 5 | 2013-10-22 | 08:30:00 | CM |
| Carbonate Alkalinity as CaCO3 | <5 | mg/L | SM2320-B | 5 | 2013-10-22 | 08:30:00 | CM |
| pH | 7.26 | | SM4500-H | 0.01 | 2013-10-11 | 15:28:00 | CM |
| pH Temperature | 14.40 | °C | SM4500-H | 0.01 | 2013-10-11 | 15:28:00 | CM |
| Conductivity | 728 | µmhos/cm | SM2510 | 0.1 | 2013-10-11 | 15:25:00 | CM |
| Total Dissolved Solids | 407 | mg/L | SM2540-C | 30 | 2013-10-15 | 15:00:00 | AL |
| Chloride, Cl | 7 | mg/L | EPA 300.0 | 1 | 2013-10-15 | 19:57:00 | CM |
| Sulfate, SO4 | 51 | mg/L | EPA 300.0 | 1 | 2013-10-15 | 19:57:00 | CM |
| **METALS BY ICP** | | | | | | | |
| Calcium, Ca - Dissolved | 76.58 | mg/L | EPA 200.7 | 0.03 | 2013-10-14 | 22:32:00 | CM |
| Iron, Fe - Total | 0.55 | mg/L | EPA 200.7 | 0.05 | 2013-10-16 | 15:55:00 | CM |
| Iron, Fe - Dissolved | <0.03 | mg/L | EPA 200.7 | 0.03 | 2013-10-14 | 22:32:00 | CM |
| Magnesium, Mg - Dissolved | 42.01 | mg/L | EPA 200.7 | 0.01 | 2013-10-14 | 22:32:00 | CM |
| Manganese, Mn - Total | 0.021 | mg/L | EPA 200.7 | 0.002 | 2013-10-16 | 15:55:00 | CM |
| Manganese, Mn - Dissolved | 0.017 | mg/L | EPA 200.7 | 0.002 | 2013-10-14 | 22:32:00 | CM |

Lab Supervisor

Domenic Ibanez
Lab Supervisor

SGS North America Inc. | Minerals Services Division
2035 North Airport Road Huntington UT 84528 t (435) 653-2311 f (435)-653-2436 www.sgs.com/minerals

Member of the SGS Group (Société Générale de Surveillance)

*This document is issued by the Company under its General Conditions of Service accessible at http://www.sgs.com/terms_and_conditions.htm. Attention is drawn to the limitation of liability, indemnification and jurisdiction issues defined therein.*

*Any holder of this document is advised that information contained hereon reflects the Company's findings at the time of its intervention only and within the limits of Client's instructions, if any. The Company's sole responsibility is to its Client and this document does not exonerate parties to a transaction from exercising all their rights and obligations under the transaction documents. Any unauthorized alteration, forgery or falsification of the content or appearance of this document is unlawful and offenders may be prosecuted to the fullest extent of the law*

# Analysis Report

October 23, 2013

**PACIFICORP**
FIELD OFFICE
PO BOX 1005
HUNTINGTON UT 84528



| | | | |
|---|---|---|---|
| Client Sample ID: | Deer Creek Mine | Sample ID By: | PacifiCorp |
| Date Sampled: | Oct 11, 2013 | Sample Taken By: | VBJ |
| Date Received: | Oct 11, 2013 | Time Received: | 1500 |
| Product Description: | WATER | Time Sampled: | 1232 |
| | | Location: | 3 N 00 |
| | | Mine: | 4 |
| | | Field - pH: | 7.17 pH units |
| | | Field - Temperature: | 12.7 DEG. C |

Comments: Dissolved Metals Filtered at Lab

**SGS Minerals Sample ID: 782-1321513-004**

| TESTS | RESULT | UNIT | METHOD | REPORTING LIMIT | ANALYZED DATE | ANALYZED TIME | ANALYST |
|---|---|---|---|---|---|---|---|
| **METALS BY ICP (continued)** | | | | | | | |
| Potassium, K - Dissolved | 4.36 | mg/L | EPA 200.7 | 0.14 | 2013-10-14 | 22:32:00 | CM |
| Sodium, Na - Dissolved | 17.99 | mg/L | EPA 200.7 | 0.09 | 2013-10-14 | 22:32:00 | CM |

Lab Supervisor

Domenic Ibanez
Lab Supervisor

SGS North America Inc. | Minerals Services Division
2035 North Airport Road Huntington UT 84528 t (435) 653-2311 f (435)-653-2436 www.sgs.com/minerals

Member of the SGS Group (Société Générale de Surveillance)

*This document is issued by the Company under its General Conditions of Service accessible at http://www.sgs.com/terms_and_conditions.htm. Attention is drawn to the limitation of liability, indemnification and jurisdiction issues defined therein.*

*Any holder of this document is advised that information contained hereon reflects the Company's findings at the time of its intervention only and within the limits of Client's instructions, if any. The Company's sole responsibility is to its Client and this document does not exonerate parties to a transaction from exercising all their rights and obligations under the transaction documents. Any unauthorized alteration, forgery or falsification of the content or appearance of this document is unlawful and offenders may be prosecuted to the fullest extent of the law*

SGS

# Analysis Report

November 14, 2013

**PACIFICORP**
FIELD OFFICE
PO BOX 1005
HUNTINGTON UT 84528



| | | | |
|---|---|---|---|
| Client Sample ID: | Deer Creek Mine | Sample ID By: | PacifiCorp |
| Date Sampled: | Nov 6, 2013 | Sample Taken By: | VBJ |
| Date Received: | Nov 7, 2013 | Time Received: | 0925 |
| Product Description: | WATER | Time Sampled: | 1027 |
| | | Location: | 11 W #2 Seal |
| | | Mine: | 4 |
| | | Field - pH: | 7.44 pH units |
| | | Field - Flow: | 5 GPM |
| | | Field - Temperature: | 15.7 DEG. C |

Comments: Dissolved Metals Filtered at Lab

**SGS Minerals Sample ID: 782-1321872-001**

| TESTS | RESULT | UNIT | METHOD | REPORTING LIMIT | ANALYZED DATE | ANALYZED TIME | ANALYST |
|---|---|---|---|---|---|---|---|
| Hardness, mg equivalent CaCO3/L | 290 | mg/L | SM2340-B | 1 | 2013-11-14 | 09:30:17 | AL |
| Acidity | 20 | mg/L | D1067 | 5 | 2013-11-12 | 10:45:00 | CM |
| Anions | 9.81 | meq/L | SM1030E | 0 | 2013-11-14 | 09:30:17 | AL |
| Balance | 0.49 | % | SM1030E | -10 | 2013-11-14 | 09:30:17 | AL |
| Cations | 9.91 | meq/L | SM1030E | 0 | 2013-11-14 | 09:30:17 | AL |
| Alkalinity, mg CaCO3/L (pH 4.5) | 443 | mg/L | SM2320-B | 5 | 2013-11-08 | 08:02:00 | CM |
| Bicarbonate Alkalinity as CaCO3 | 443 | mg/L | SM2320-B | 5 | 2013-11-08 | 08:02:00 | CM |
| Carbonate Alkalinity as CaCO3 | <5 | mg/L | SM2320-B | 5 | 2013-11-08 | 08:02:00 | CM |
| pH | 7.47 | | SM4500-H | 0.01 | 2013-11-07 | 09:35:00 | CM |
| pH Temperature | 9.20 | °C | SM4500-H | 0.01 | 2013-11-07 | 09:35:00 | CM |
| Conductivity | 882 | µmhos/cm | SM2510 | 0.1 | 2013-11-07 | 09:40:00 | CM |
| Total Dissolved Solids | 510 | mg/L | SM2540-C | 30 | 2013-11-07 | 14:45:00 | CM |
| Chloride, Cl | 8 | mg/L | EPA 300.0 | 1 | 2013-11-11 | 22:18:00 | CM |
| Sulfate, SO4 | 35 | mg/L | EPA 300.0 | 1 | 2013-11-11 | 22:18:00 | CM |
| **METALS BY ICP** | | | | | | | |
| Calcium, Ca - Dissolved | 75.26 | mg/L | EPA 200.7 | 0.03 | 2013-11-07 | 15:00:00 | CM |
| Iron, Fe - Total | 0.62 | mg/L | EPA 200.7 | 0.05 | 2013-11-13 | 12:36:00 | CM |
| Iron, Fe - Dissolved | <0.03 | mg/L | EPA 200.7 | 0.03 | 2013-11-07 | 15:00:00 | CM |
| Magnesium, Mg - Dissolved | 24.79 | mg/L | EPA 200.7 | 0.01 | 2013-11-07 | 15:00:00 | CM |
| Manganese, Mn - Total | 0.071 | mg/L | EPA 200.7 | 0.002 | 2013-11-13 | 12:36:00 | CM |

Lab Supervisor

Domenic Ibanez
Lab Supervisor

SGS North America Inc. | Minerals Services Division
2035 North Airport Road Huntington UT 84528 t (435) 653-2311 f (435)-653-2436 www.sgs.com/minerals

Member of the SGS Group (Société Générale de Surveillance)

*This document is issued by the Company under its General Conditions of Service accessible at http://www.sgs.com/terms_and_conditions.htm. Attention is drawn to the limitation of liability, indemnification and jurisdiction issues defined therein.*

*Any holder of this document is advised that information contained hereon reflects the Company's findings at the time of its intervention only and within the limits of Client's instructions, if any. The Company's sole responsibility is to its Client and this document does not exonerate parties to a transaction from exercising all their rights and obligations under the transaction documents. Any unauthorized alteration, forgery or falsification of the content or appearance of this document is unlawful and offenders may be prosecuted to the fullest extent of the law*

SGS

# Analysis Report

November 14, 2013

**PACIFICORP**
FIELD OFFICE
PO BOX 1005
HUNTINGTON UT 84528



| | | | |
|---|---|---|---|
| Client Sample ID: | Deer Creek Mine | Sample ID By: | PacifiCorp |
| Date Sampled: | Nov 6, 2013 | Sample Taken By: | VBJ |
| Date Received: | Nov 7, 2013 | Time Received: | 0925 |
| Product Description: | WATER | Time Sampled: | 1027 |
| | | Location: | 11 W #2 Seal |
| | | Mine: | 4 |
| | | Field - pH: | 7.44 pH units |
| | | Field - Flow: | 5 GPM |
| | | Field - Temperature: | 15.7 DEG. C |

Comments: Dissolved Metals Filtered at Lab

**SGS Minerals Sample ID: 782-1321872-001**

| TESTS | RESULT | UNIT | METHOD | REPORTING LIMIT | ANALYZED DATE | ANALYZED TIME | ANALYST |
|---|---|---|---|---|---|---|---|
| **METALS BY ICP (continued)** | | | | | | | |
| Manganese, Mn - Dissolved | 0.071 | mg/L | EPA 200.7 | 0.002 | 2013-11-07 | 15:00:00 | CM |
| Potassium, K - Dissolved | 9.92 | mg/L | EPA 200.7 | 0.14 | 2013-11-07 | 15:00:00 | CM |
| Sodium, Na - Dissolved | 88.74 | mg/L | EPA 200.7 | 0.09 | 2013-11-07 | 15:00:00 | CM |

Lab Supervisor

Domenic Ibanez
Lab Supervisor

SGS North America Inc. | Minerals Services Division
2035 North Airport Road Huntington UT 84528 t (435) 653-2311 f (435)-653-2436 www.sgs.com/minerals

Member of the SGS Group (Société Générale de Surveillance)

*This document is issued by the Company under its General Conditions of Service accessible at http://www.sgs.com/terms_and_conditions.htm. Attention is drawn to the limitation of liability, indemnification and jurisdiction issues defined therein.*

*Any holder of this document is advised that information contained hereon reflects the Company's findings at the time of its intervention only and within the limits of Client's instructions, if any. The Company's sole responsibility is to its Client and this document does not exonerate parties to a transaction from exercising all their rights and obligations under the transaction documents. Any unauthorized alteration, forgery or falsification of the content or appearance of this document is unlawful and offenders may be prosecuted to the fullest extent of the law*

# Analysis Report

November 14, 2013

**PACIFICORP**
FIELD OFFICE
PO BOX 1005
HUNTINGTON UT 84528



| | | | |
|---|---|---|---|
| Client Sample ID: | Deer Creek Mine | Sample ID By: | PacifiCorp |
| Date Sampled: | Nov 6, 2013 | Sample Taken By: | VBJ |
| Date Received: | Nov 7, 2013 | Time Received: | 0925 |
| Product Description: | WATER | Time Sampled: | 1053 |
| | | Location: | 17 W #2 Seal |
| | | Mine: | 4 |
| | | Field - pH: | 7.55 pH units |
| | | Field - Temperature: | 12.6 DEG. C |

Comments: Dissolved Metals Filtered at Lab

**SGS Minerals Sample ID: 782-1321872-002**

| TESTS | RESULT | UNIT | METHOD | REPORTING LIMIT | ANALYZED DATE | ANALYZED TIME | ANALYST |
|---|---|---|---|---|---|---|---|
| Hardness, mg equivalent CaCO3/L | 341 | mg/L | SM2340-B | 1 | 2013-11-14 | 09:30:17 | AL |
| Acidity | 18 | mg/L | D1067 | 5 | 2013-11-12 | 10:45:00 | CM |
| Anions | 10.18 | meq/L | SM1030E | 0 | 2013-11-14 | 09:30:17 | AL |
| Balance | -1.58 | % | SM1030E | -10 | 2013-11-14 | 09:30:17 | AL |
| Cations | 9.87 | meq/L | SM1030E | 0 | 2013-11-14 | 09:30:17 | AL |
| Alkalinity, mg CaCO3/L (pH 4.5) | 363 | mg/L | SM2320-B | 5 | 2013-11-08 | 08:02:00 | CM |
| Bicarbonate Alkalinity as CaCO3 | 363 | mg/L | SM2320-B | 5 | 2013-11-08 | 08:02:00 | CM |
| Carbonate Alkalinity as CaCO3 | <5 | mg/L | SM2320-B | 5 | 2013-11-08 | 08:02:00 | CM |
| pH | 7.51 | | SM4500-H | 0.01 | 2013-11-07 | 09:37:00 | CM |
| pH Temperature | 9.70 | °C | SM4500-H | 0.01 | 2013-11-07 | 09:37:00 | CM |
| Conductivity | 889 | µmhos/cm | SM2510 | 0.1 | 2013-11-07 | 09:40:00 | CM |
| Total Dissolved Solids | 529 | mg/L | SM2540-C | 30 | 2013-11-07 | 14:45:00 | CM |
| Chloride, Cl | 12 | mg/L | EPA 300.0 | 1 | 2013-11-11 | 22:18:00 | CM |
| Sulfate, SO4 | 125 | mg/L | EPA 300.0 | 1 | 2013-11-11 | 22:18:00 | CM |
| **METALS BY ICP** | | | | | | | |
| Calcium, Ca - Dissolved | 65.79 | mg/L | EPA 200.7 | 0.03 | 2013-11-07 | 15:00:00 | CM |
| Iron, Fe - Total | 2.48 | mg/L | EPA 200.7 | 0.05 | 2013-11-13 | 12:36:00 | CM |
| Iron, Fe - Dissolved | <0.03 | mg/L | EPA 200.7 | 0.03 | 2013-11-07 | 15:00:00 | CM |
| Magnesium, Mg - Dissolved | 42.81 | mg/L | EPA 200.7 | 0.01 | 2013-11-07 | 15:00:00 | CM |
| Manganese, Mn - Total | 0.024 | mg/L | EPA 200.7 | 0.002 | 2013-11-13 | 12:36:00 | CM |
| Manganese, Mn - Dissolved | 0.024 | mg/L | EPA 200.7 | 0.002 | 2013-11-07 | 15:00:00 | CM |

Lab Supervisor

Domenic Ibanez
Lab Supervisor

SGS North America Inc. | Minerals Services Division
2035 North Airport Road Huntington UT 84528 t (435) 653-2311 f (435)-653-2436 www.sgs.com/minerals

Member of the SGS Group (Société Générale de Surveillance)

*This document is issued by the Company under its General Conditions of Service accessible at http://www.sgs.com/terms_and_conditions.htm. Attention is drawn to the limitation of liability, indemnification and jurisdiction issues defined therein.*

*Any holder of this document is advised that information contained hereon reflects the Company's findings at the time of its intervention only and within the limits of Client's instructions, if any. The Company's sole responsibility is to its Client and this document does not exonerate parties to a transaction from exercising all their rights and obligations under the transaction documents. Any unauthorized alteration, forgery or falsification of the content or appearance of this document is unlawful and offenders may be prosecuted to the fullest extent of the law*

SGS

# Analysis Report

November 14, 2013

**PACIFICORP**
FIELD OFFICE
PO BOX 1005
HUNTINGTON UT 84528



| | | | |
|---|---|---|---|
| Client Sample ID: | Deer Creek Mine | Sample ID By: | PacifiCorp |
| Date Sampled: | Nov 6, 2013 | Sample Taken By: | VBJ |
| Date Received: | Nov 7, 2013 | Time Received: | 0925 |
| Product Description: | WATER | Time Sampled: | 1053 |
| | | Location: | 17 W #2 Seal |
| | | Mine: | 4 |
| | | Field - pH: | 7.55 pH units |
| | | Field - Temperature: | 12.6 DEG. C |

Comments: Dissolved Metals Filtered at Lab

**SGS Minerals Sample ID: 782-1321872-002**

| TESTS | RESULT | UNIT | METHOD | REPORTING LIMIT | ANALYZED DATE | ANALYZED TIME | ANALYST |
|---|---|---|---|---|---|---|---|
| **METALS BY ICP (continued)** | | | | | | | |
| Potassium, K - Dissolved | 11.03 | mg/L | EPA 200.7 | 0.14 | 2013-11-07 | 15:00:00 | CM |
| Sodium, Na - Dissolved | 63.88 | mg/L | EPA 200.7 | 0.09 | 2013-11-07 | 15:00:00 | CM |

Lab Supervisor

Domenic Ibanez
Lab Supervisor

SGS North America Inc. | Minerals Services Division
2035 North Airport Road Huntington UT 84528 t (435) 653-2311 f (435)-653-2436 www.sgs.com/minerals

Member of the SGS Group (Société Générale de Surveillance)

*This document is issued by the Company under its General Conditions of Service accessible at http://www.sgs.com/terms_and_conditions.htm. Attention is drawn to the limitation of liability, indemnification and jurisdiction issues defined therein.*

*Any holder of this document is advised that information contained hereon reflects the Company's findings at the time of its intervention only and within the limits of Client's instructions, if any. The Company's sole responsibility is to its Client and this document does not exonerate parties to a transaction from exercising all their rights and obligations under the transaction documents. Any unauthorized alteration, forgery or falsification of the content or appearance of this document is unlawful and offenders may be prosecuted to the fullest extent of the law*

# Analysis Report

November 14, 2013

**PACIFICORP**
FIELD OFFICE
PO BOX 1005
HUNTINGTON UT 84528



| | | | |
|---|---|---|---|
| Client Sample ID: | Deer Creek Mine | Sample ID By: | PacifiCorp |
| Date Sampled: | Nov 6, 2013 | Sample Taken By: | VBJ |
| Date Received: | Nov 7, 2013 | Time Received: | 0925 |
| Product Description: | WATER | Time Sampled: | 1350 |
| | | Location: | 10 N XC-5 Borehole |
| | | Mine: | 4 |
| | | Field - pH: | 7.46 pH units |
| | | Field - Flow: | ~50 GPM |
| | | Field - Temperature: | 11.4 DEG. C |

Comments: Dissolved Metals Filtered at Lab

**SGS Minerals Sample ID: 782-1321872-005**

| TESTS | RESULT | UNIT | METHOD | REPORTING LIMIT | ANALYZED DATE | ANALYZED TIME | ANALYST |
|---|---|---|---|---|---|---|---|
| Hardness, mg equivalent CaCO3/L | 366 | mg/L | SM2340-B | 1 | 2013-11-14 | 09:30:17 | AL |
| Acidity | 25 | mg/L | D1067 | 5 | 2013-11-12 | 10:45:00 | CM |
| Anions | 13.36 | meq/L | SM1030E | 0 | 2013-11-14 | 09:30:17 | AL |
| Balance | -0.83 | % | SM1030E | -10 | 2013-11-14 | 09:30:17 | AL |
| Cations | 13.14 | meq/L | SM1030E | 0 | 2013-11-14 | 09:30:17 | AL |
| Alkalinity, mg CaCO3/L (pH 4.5) | 472 | mg/L | SM2320-B | 5 | 2013-11-08 | 08:02:00 | CM |
| Bicarbonate Alkalinity as CaCO3 | 472 | mg/L | SM2320-B | 5 | 2013-11-08 | 08:02:00 | CM |
| Carbonate Alkalinity as CaCO3 | <5 | mg/L | SM2320-B | 5 | 2013-11-08 | 08:02:00 | CM |
| pH | 7.44 | | SM4500-H | 0.01 | 2013-11-07 | 09:43:00 | CM |
| pH Temperature | 10.60 | °C | SM4500-H | 0.01 | 2013-11-07 | 09:43:00 | CM |
| Conductivity | 1183 | µmhos/cm | SM2510 | 0.1 | 2013-11-07 | 09:40:00 | CM |
| Total Dissolved Solids | 737 | mg/L | SM2540-C | 30 | 2013-11-12 | 12:10:00 | CM |
| Chloride, Cl | 7 | mg/L | EPA 300.0 | 1 | 2013-11-11 | 22:18:00 | CM |
| Sulfate, SO4 | 179 | mg/L | EPA 300.0 | 1 | 2013-11-11 | 22:18:00 | CM |
| **METALS BY ICP** | | | | | | | |
| Calcium, Ca - Dissolved | 73.06 | mg/L | EPA 200.7 | 0.03 | 2013-11-07 | 15:00:00 | CM |
| Iron, Fe - Total | <0.05 | mg/L | EPA 200.7 | 0.05 | 2013-11-13 | 12:36:00 | CM |
| Iron, Fe - Dissolved | <0.03 | mg/L | EPA 200.7 | 0.03 | 2013-11-07 | 15:00:00 | CM |
| Magnesium, Mg - Dissolved | 44.63 | mg/L | EPA 200.7 | 0.01 | 2013-11-07 | 15:00:00 | CM |
| Manganese, Mn - Total | 0.002 | mg/L | EPA 200.7 | 0.002 | 2013-11-13 | 12:36:00 | CM |

Lab Supervisor

Domenic Ibanez
Lab Supervisor

SGS North America Inc. | Minerals Services Division
2035 North Airport Road Huntington UT 84528 t (435) 653-2311 f (435)-653-2436 www.sgs.com/minerals

Member of the SGS Group (Société Générale de Surveillance)

*This document is issued by the Company under its General Conditions of Service accessible at http://www.sgs.com/terms_and_conditions.htm. Attention is drawn to the limitation of liability, indemnification and jurisdiction issues defined therein.*

*Any holder of this document is advised that information contained hereon reflects the Company's findings at the time of its intervention only and within the limits of Client's instructions, if any. The Company's sole responsibility is to its Client and this document does not exonerate parties to a transaction from exercising all their rights and obligations under the transaction documents. Any unauthorized alteration, forgery or falsification of the content or appearance of this document is unlawful and offenders may be prosecuted to the fullest extent of the law*

SGS

# Analysis Report

November 14, 2013

**PACIFICORP**
FIELD OFFICE
PO BOX 1005
HUNTINGTON UT 84528



| | | | |
|---|---|---|---|
| Client Sample ID: | Deer Creek Mine | Sample ID By: | PacifiCorp |
| Date Sampled: | Nov 6, 2013 | Sample Taken By: | VBJ |
| Date Received: | Nov 7, 2013 | Time Received: | 0925 |
| Product Description: | WATER | Time Sampled: | 1350 |
| | | Location: | 10 N XC-5 Borehole |
| | | Mine: | 4 |
| | | Field - pH: | 7.46 pH units |
| | | Field - Flow: | ~50 GPM |
| | | Field - Temperature: | 11.4 DEG. C |

Comments: Dissolved Metals Filtered at Lab

**SGS Minerals Sample ID: 782-1321872-005**

| TESTS | RESULT | UNIT | METHOD | REPORTING LIMIT | ANALYZED DATE | ANALYZED TIME | ANALYST |
|---|---|---|---|---|---|---|---|
| **METALS BY ICP (continued)** | | | | | | | |
| Manganese, Mn - Dissolved | <0.002 | mg/L | EPA 200.7 | 0.002 | 2013-11-07 | 15:00:00 | CM |
| Potassium, K - Dissolved | 10.65 | mg/L | EPA 200.7 | 0.14 | 2013-11-07 | 15:00:00 | CM |
| Sodium, Na - Dissolved | 127.54 | mg/L | EPA 200.7 | 0.09 | 2013-11-07 | 15:00:00 | CM |

Lab Supervisor

Domenic Ibanez
Lab Supervisor

SGS North America Inc. | Minerals Services Division
2035 North Airport Road Huntington UT 84528 t (435) 653-2311 f (435)-653-2436 www.sgs.com/minerals

Member of the SGS Group (Société Générale de Surveillance)

*This document is issued by the Company under its General Conditions of Service accessible at http://www.sgs.com/terms_and_conditions.htm. Attention is drawn to the limitation of liability, indemnification and jurisdiction issues defined therein.*

*Any holder of this document is advised that information contained hereon reflects the Company's findings at the time of its intervention only and within the limits of Client's instructions, if any. The Company's sole responsibility is to its Client and this document does not exonerate parties to a transaction from exercising all their rights and obligations under the transaction documents. Any unauthorized alteration, forgery or falsification of the content or appearance of this document is unlawful and offenders may be prosecuted to the fullest extent of the law*

SGS

# Analysis Report

November 14, 2013

**PACIFICORP**
FIELD OFFICE
PO BOX 1005
HUNTINGTON UT 84528



| | | | |
|---|---|---|---|
| Client Sample ID: | Deer Creek Mine | Sample ID By: | PacifiCorp |
| Date Sampled: | Nov 6, 2013 | Sample Taken By: | VBJ |
| Date Received: | Nov 7, 2013 | Time Received: | 0925 |
| Product Description: | WATER | Time Sampled: | 1610 |
| | | Location: | 3 N 00 |
| | | Mine: | 4 |
| | | Field - pH: | 7.22 pH units |
| | | Field - Temperature: | 12.8 DEG. C |

Comments: Dissolved Metals Filtered at Lab

**SGS Minerals Sample ID: 782-1321872-006**

| TESTS | RESULT | UNIT | METHOD | REPORTING LIMIT | ANALYZED DATE | ANALYZED TIME | ANALYST |
|---|---|---|---|---|---|---|---|
| Hardness, mg equivalent CaCO3/L | 355 | mg/L | SM2340-B | 1 | 2013-11-14 | 09:30:17 | AL |
| Acidity | 32 | mg/L | D1067 | 5 | 2013-11-12 | 10:45:00 | CM |
| Anions | 8.07 | meq/L | SM1030E | 0 | 2013-11-14 | 09:30:17 | AL |
| Balance | -0.39 | % | SM1030E | -10 | 2013-11-14 | 09:30:17 | AL |
| Cations | 8.01 | meq/L | SM1030E | 0 | 2013-11-14 | 09:30:17 | AL |
| Alkalinity, mg CaCO3/L (pH 4.5) | 340 | mg/L | SM2320-B | 5 | 2013-11-08 | 08:02:00 | CM |
| Bicarbonate Alkalinity as CaCO3 | 340 | mg/L | SM2320-B | 5 | 2013-11-08 | 08:02:00 | CM |
| Carbonate Alkalinity as CaCO3 | <5 | mg/L | SM2320-B | 5 | 2013-11-08 | 08:02:00 | CM |
| pH | 7.25 | | SM4500-H | 0.01 | 2013-11-07 | 09:47:00 | CM |
| pH Temperature | 11.10 | °C | SM4500-H | 0.01 | 2013-11-07 | 09:47:00 | CM |
| Conductivity | 714 | µmhos/cm | SM2510 | 0.1 | 2013-11-07 | 09:40:00 | CM |
| Total Dissolved Solids | 394 | mg/L | SM2540-C | 30 | 2013-11-12 | 12:10:00 | CM |
| Chloride, Cl | 7 | mg/L | EPA 300.0 | 1 | 2013-11-11 | 22:18:00 | CM |
| Sulfate, SO4 | 52 | mg/L | EPA 300.0 | 1 | 2013-11-11 | 22:18:00 | CM |
| **METALS BY ICP** | | | | | | | |
| Calcium, Ca - Dissolved | 76.32 | mg/L | EPA 200.7 | 0.03 | 2013-11-07 | 15:00:00 | CM |
| Iron, Fe - Total | 0.52 | mg/L | EPA 200.7 | 0.05 | 2013-11-13 | 12:36:00 | CM |
| Iron, Fe - Dissolved | 0.06 | mg/L | EPA 200.7 | 0.03 | 2013-11-07 | 15:00:00 | CM |
| Magnesium, Mg - Dissolved | 40.04 | mg/L | EPA 200.7 | 0.01 | 2013-11-07 | 15:00:00 | CM |
| Manganese, Mn - Total | 0.021 | mg/L | EPA 200.7 | 0.002 | 2013-11-13 | 12:36:00 | CM |
| Manganese, Mn - Dissolved | 0.021 | mg/L | EPA 200.7 | 0.002 | 2013-11-07 | 15:00:00 | CM |

Lab Supervisor

Domenic Ibanez
Lab Supervisor

SGS North America Inc. | Minerals Services Division
2035 North Airport Road Huntington UT 84528 t (435) 653-2311 f (435)-653-2436 www.sgs.com/minerals

Member of the SGS Group (Société Générale de Surveillance)

*This document is issued by the Company under its General Conditions of Service accessible at http://www.sgs.com/terms_and_conditions.htm. Attention is drawn to the limitation of liability, indemnification and jurisdiction issues defined therein.*

*Any holder of this document is advised that information contained hereon reflects the Company's findings at the time of its intervention only and within the limits of Client's instructions, if any. The Company's sole responsibility is to its Client and this document does not exonerate parties to a transaction from exercising all their rights and obligations under the transaction documents. Any unauthorized alteration, forgery or falsification of the content or appearance of this document is unlawful and offenders may be prosecuted to the fullest extent of the law*

SGS

# Analysis Report

November 14, 2013

**PACIFICORP**
FIELD OFFICE
PO BOX 1005
HUNTINGTON UT 84528



| | | | |
|---|---|---|---|
| Client Sample ID: | Deer Creek Mine | Sample ID By: | PacifiCorp |
| Date Sampled: | Nov 6, 2013 | Sample Taken By: | VBJ |
| Date Received: | Nov 7, 2013 | Time Received: | 0925 |
| Product Description: | WATER | Time Sampled: | 1610 |
| | | Location: | 3 N 00 |
| | | Mine: | 4 |
| | | Field - pH: | 7.22 pH units |
| | | Field - Temperature: | 12.8 DEG. C |

Comments: Dissolved Metals Filtered at Lab

**SGS Minerals Sample ID: 782-1321872-006**

| TESTS | RESULT | UNIT | METHOD | REPORTING LIMIT | ANALYZED DATE | ANALYZED TIME | ANALYST |
|---|---|---|---|---|---|---|---|
| **METALS BY ICP (continued)** | | | | | | | |
| Potassium, K - Dissolved | 4.52 | mg/L | EPA 200.7 | 0.14 | 2013-11-07 | 15:00:00 | CM |
| Sodium, Na - Dissolved | 18.18 | mg/L | EPA 200.7 | 0.09 | 2013-11-07 | 15:00:00 | CM |

Lab Supervisor

Domenic Ibanez
Lab Supervisor

SGS North America Inc. | Minerals Services Division
2035 North Airport Road Huntington UT 84528 t (435) 653-2311 f (435)-653-2436 www.sgs.com/minerals

Member of the SGS Group (Société Générale de Surveillance)

*This document is issued by the Company under its General Conditions of Service accessible at http://www.sgs.com/terms_and_conditions.htm. Attention is drawn to the limitation of liability, indemnification and jurisdiction issues defined therein.*

*Any holder of this document is advised that information contained hereon reflects the Company's findings at the time of its intervention only and within the limits of Client's instructions, if any. The Company's sole responsibility is to its Client and this document does not exonerate parties to a transaction from exercising all their rights and obligations under the transaction documents. Any unauthorized alteration, forgery or falsification of the content or appearance of this document is unlawful and offenders may be prosecuted to the fullest extent of the law*

# Analysis Report

November 14, 2013

**PACIFICORP**
FIELD OFFICE
PO BOX 1005
HUNTINGTON UT 84528



| | | | |
|---|---|---|---|
| Client Sample ID: | Deer Creek Mine | Sample ID By: | PacifiCorp |
| Date Sampled: | Nov 6, 2013 | Sample Taken By: | VBJ |
| Date Received: | Nov 7, 2013 | Time Received: | 0925 |
| Product Description: | WATER | Time Sampled: | 1130 |
| | | Location: | 8th W XC-25 #2 |
| | | Mine: | 4 |
| | | Field - pH: | 7.91 pH units |
| | | Field - Temperature: | 12.7 DEG. C |

Comments: Dissolved Metals Filtered at Lab

**SGS Minerals Sample ID: 782-1321872-003**

| TESTS | RESULT | UNIT | METHOD | REPORTING LIMIT | ANALYZED DATE | ANALYZED TIME | ANALYST |
|---|---|---|---|---|---|---|---|
| Hardness, mg equivalent CaCO3/L | 289 | mg/L | SM2340-B | 1 | 2013-11-14 | 09:30:17 | AL |
| Acidity | 11 | mg/L | D1067 | 5 | 2013-11-12 | 10:45:00 | CM |
| Anions | 6.58 | meq/L | SM1030E | 0 | 2013-11-14 | 09:30:17 | AL |
| Balance | 0.27 | % | SM1030E | -10 | 2013-11-14 | 09:30:17 | AL |
| Cations | 6.62 | meq/L | SM1030E | 0 | 2013-11-14 | 09:30:17 | AL |
| Alkalinity, mg CaCO3/L (pH 4.5) | 255 | mg/L | SM2320-B | 5 | 2013-11-08 | 08:02:00 | CM |
| Bicarbonate Alkalinity as CaCO3 | 255 | mg/L | SM2320-B | 5 | 2013-11-08 | 08:02:00 | CM |
| Carbonate Alkalinity as CaCO3 | <5 | mg/L | SM2320-B | 5 | 2013-11-08 | 08:02:00 | CM |
| pH | 7.70 | | SM4500-H | 0.01 | 2013-11-07 | 09:39:00 | CM |
| pH Temperature | 9.80 | °C | SM4500-H | 0.01 | 2013-11-07 | 09:39:00 | CM |
| Conductivity | 601 | µmhos/cm | SM2510 | 0.1 | 2013-11-07 | 09:40:00 | CM |
| Total Dissolved Solids | 325 | mg/L | SM2540-C | 30 | 2013-11-07 | 14:45:00 | CM |
| Chloride, Cl | 16 | mg/L | EPA 300.0 | 1 | 2013-11-11 | 22:18:00 | CM |
| Sulfate, SO4 | 50 | mg/L | EPA 300.0 | 1 | 2013-11-11 | 22:18:00 | CM |
| **METALS BY ICP** | | | | | | | |
| Calcium, Ca - Dissolved | 56.81 | mg/L | EPA 200.7 | 0.03 | 2013-11-07 | 15:00:00 | CM |
| Iron, Fe - Total | 0.13 | mg/L | EPA 200.7 | 0.05 | 2013-11-13 | 12:36:00 | CM |
| Iron, Fe - Dissolved | <0.03 | mg/L | EPA 200.7 | 0.03 | 2013-11-07 | 15:00:00 | CM |
| Magnesium, Mg - Dissolved | 35.70 | mg/L | EPA 200.7 | 0.01 | 2013-11-07 | 15:00:00 | CM |
| Manganese, Mn - Total | 0.003 | mg/L | EPA 200.7 | 0.002 | 2013-11-13 | 12:36:00 | CM |
| Manganese, Mn - Dissolved | 0.003 | mg/L | EPA 200.7 | 0.002 | 2013-11-07 | 15:00:00 | CM |

Lab Supervisor

Domenic Ibanez
Lab Supervisor

SGS North America Inc. | Minerals Services Division
2035 North Airport Road Huntington UT 84528 t (435) 653-2311 f (435)-653-2436 www.sgs.com/minerals

Member of the SGS Group (Société Générale de Surveillance)

*This document is issued by the Company under its General Conditions of Service accessible at http://www.sgs.com/terms_and_conditions.htm. Attention is drawn to the limitation of liability, indemnification and jurisdiction issues defined therein.*

*Any holder of this document is advised that information contained hereon reflects the Company's findings at the time of its intervention only and within the limits of Client's instructions, if any. The Company's sole responsibility is to its Client and this document does not exonerate parties to a transaction from exercising all their rights and obligations under the transaction documents. Any unauthorized alteration, forgery or falsification of the content or appearance of this document is unlawful and offenders may be prosecuted to the fullest extent of the law*

SGS

# Analysis Report

November 14, 2013

**PACIFICORP**
FIELD OFFICE
PO BOX 1005
HUNTINGTON UT 84528



| | | | |
|---|---|---|---|
| Client Sample ID: | Deer Creek Mine | Sample ID By: | PacifiCorp |
| Date Sampled: | Nov 6, 2013 | Sample Taken By: | VBJ |
| Date Received: | Nov 7, 2013 | Time Received: | 0925 |
| Product Description: | WATER | Time Sampled: | 1130 |
| | | Location: | 8th W XC-25 #2 |
| | | Mine: | 4 |
| | | Field - pH: | 7.91 pH units |
| | | Field - Temperature: | 12.7 DEG. C |
| Comments: | Dissolved Metals Filtered at Lab | | |

**SGS Minerals Sample ID: 782-1321872-003**

| TESTS | RESULT | UNIT | METHOD | REPORTING LIMIT | ANALYZED DATE | ANALYZED TIME | ANALYST |
|---|---|---|---|---|---|---|---|
| **METALS BY ICP (continued)** | | | | | | | |
| Potassium, K - Dissolved | 5.15 | mg/L | EPA 200.7 | 0.14 | 2013-11-07 | 15:00:00 | CM |
| Sodium, Na - Dissolved | 16.42 | mg/L | EPA 200.7 | 0.09 | 2013-11-07 | 15:00:00 | CM |

Lab Supervisor

Domenic Ibanez
Lab Supervisor

SGS North America Inc. | Minerals Services Division
2035 North Airport Road Huntington UT 84528 t (435) 653-2311 f (435)-653-2436 www.sgs.com/minerals

Member of the SGS Group (Société Générale de Surveillance)

*This document is issued by the Company under its General Conditions of Service accessible at http://www.sgs.com/terms_and_conditions.htm. Attention is drawn to the limitation of liability, indemnification and jurisdiction issues defined therein.*

*Any holder of this document is advised that information contained hereon reflects the Company's findings at the time of its intervention only and within the limits of Client's instructions, if any. The Company's sole responsibility is to its Client and this document does not exonerate parties to a transaction from exercising all their rights and obligations under the transaction documents. Any unauthorized alteration, forgery or falsification of the content or appearance of this document is unlawful and offenders may be prosecuted to the fullest extent of the law*

# Analysis Report

November 14, 2013

**PACIFICORP**
FIELD OFFICE
PO BOX 1005
HUNTINGTON UT 84528



| | | | |
|---|---|---|---|
| Client Sample ID: | Deer Creek Mine | Sample ID By: | PacifiCorp |
| Date Sampled: | Nov 6, 2013 | Sample Taken By: | VBJ |
| Date Received: | Nov 7, 2013 | Time Received: | 0925 |
| Product Description: | WATER | Time Sampled: | 1225 |
| | | Location: | 11 N XC-9 #2 |
| | | Mine: | 4 |
| | | Field - pH: | 7.85 pH units |
| | | Field - Temperature: | 12.5 DEG. C |

Comments: Dissolved Metals Filtered at Lab

**SGS Minerals Sample ID: 782-1321872-004**

| TESTS | RESULT | UNIT | METHOD | REPORTING LIMIT | ANALYZED DATE | ANALYZED TIME | ANALYST |
|---|---|---|---|---|---|---|---|
| Hardness, mg equivalent CaCO3/L | 281 | mg/L | SM2340-B | 1 | 2013-11-14 | 09:30:17 | AL |
| Acidity | 8 | mg/L | D1067 | 5 | 2013-11-12 | 10:45:00 | CM |
| Anions | 6.25 | meq/L | SM1030E | 0 | 2013-11-14 | 09:30:17 | AL |
| Balance | 0.37 | % | SM1030E | -10 | 2013-11-14 | 09:30:17 | AL |
| Cations | 6.30 | meq/L | SM1030E | 0 | 2013-11-14 | 09:30:17 | AL |
| Alkalinity, mg CaCO3/L (pH 4.5) | 252 | mg/L | SM2320-B | 5 | 2013-11-08 | 08:02:00 | CM |
| Bicarbonate Alkalinity as CaCO3 | 252 | mg/L | SM2320-B | 5 | 2013-11-08 | 08:02:00 | CM |
| Carbonate Alkalinity as CaCO3 | <5 | mg/L | SM2320-B | 5 | 2013-11-08 | 08:02:00 | CM |
| pH | 7.97 | | SM4500-H | 0.01 | 2013-11-07 | 09:41:00 | CM |
| pH Temperature | 10.10 | °C | SM4500-H | 0.01 | 2013-11-07 | 09:41:00 | CM |
| Conductivity | 575 | µmhos/cm | SM2510 | 0.1 | 2013-11-07 | 09:40:00 | CM |
| Total Dissolved Solids | 313 | mg/L | SM2540-C | 30 | 2013-11-07 | 14:45:00 | CM |
| Chloride, Cl | 9 | mg/L | EPA 300.0 | 1 | 2013-11-11 | 22:18:00 | CM |
| Sulfate, SO4 | 46 | mg/L | EPA 300.0 | 1 | 2013-11-11 | 22:18:00 | CM |
| **METALS BY ICP** | | | | | | | |
| Calcium, Ca - Dissolved | 57.37 | mg/L | EPA 200.7 | 0.03 | 2013-11-07 | 15:00:00 | CM |
| Iron, Fe - Total | <0.05 | mg/L | EPA 200.7 | 0.05 | 2013-11-13 | 12:36:00 | CM |
| Iron, Fe - Dissolved | <0.03 | mg/L | EPA 200.7 | 0.03 | 2013-11-07 | 15:00:00 | CM |
| Magnesium, Mg - Dissolved | 33.40 | mg/L | EPA 200.7 | 0.01 | 2013-11-07 | 15:00:00 | CM |
| Manganese, Mn - Total | 0.005 | mg/L | EPA 200.7 | 0.002 | 2013-11-13 | 12:36:00 | CM |
| Manganese, Mn - Dissolved | 0.005 | mg/L | EPA 200.7 | 0.002 | 2013-11-07 | 15:00:00 | CM |

Lab Supervisor

Domenic Ibanez
Lab Supervisor

SGS North America Inc. | Minerals Services Division
2035 North Airport Road Huntington UT 84528 t (435) 653-2311 f (435)-653-2436 www.sgs.com/minerals

Member of the SGS Group (Société Générale de Surveillance)

*This document is issued by the Company under its General Conditions of Service accessible at http://www.sgs.com/terms_and_conditions.htm. Attention is drawn to the limitation of liability, indemnification and jurisdiction issues defined therein.*

*Any holder of this document is advised that information contained hereon reflects the Company's findings at the time of its intervention only and within the limits of Client's instructions, if any. The Company's sole responsibility is to its Client and this document does not exonerate parties to a transaction from exercising all their rights and obligations under the transaction documents. Any unauthorized alteration, forgery or falsification of the content or appearance of this document is unlawful and offenders may be prosecuted to the fullest extent of the law*

# Analysis Report

November 14, 2013

**PACIFICORP**
FIELD OFFICE
PO BOX 1005
HUNTINGTON UT 84528



| | | | |
|---|---|---|---|
| Client Sample ID: | Deer Creek Mine | Sample ID By: | PacifiCorp |
| Date Sampled: | Nov 6, 2013 | Sample Taken By: | VBJ |
| Date Received: | Nov 7, 2013 | Time Received: | 0925 |
| Product Description: | WATER | Time Sampled: | 1225 |
| | | Location: | 11 N XC-9 #2 |
| | | Mine: | 4 |
| | | Field - pH: | 7.85 pH units |
| | | Field - Temperature: | 12.5 DEG. C |

Comments: Dissolved Metals Filtered at Lab

**SGS Minerals Sample ID: 782-1321872-004**

| TESTS | RESULT | UNIT | METHOD | REPORTING LIMIT | ANALYZED DATE | ANALYZED TIME | ANALYST |
|---|---|---|---|---|---|---|---|
| **METALS BY ICP (continued)** | | | | | | | |
| Potassium, K - Dissolved | 5.77 | mg/L | EPA 200.7 | 0.14 | 2013-11-07 | 15:00:00 | CM |
| Sodium, Na - Dissolved | 12.45 | mg/L | EPA 200.7 | 0.09 | 2013-11-07 | 15:00:00 | CM |

Lab Supervisor

Domenic Ibanez
Lab Supervisor

SGS North America Inc. | Minerals Services Division
2035 North Airport Road Huntington UT 84528 t (435) 653-2311 f (435)-653-2436 www.sgs.com/minerals

Member of the SGS Group (Société Générale de Surveillance)

*This document is issued by the Company under its General Conditions of Service accessible at http://www.sgs.com/terms_and_conditions.htm. Attention is drawn to the limitation of liability, indemnification and jurisdiction issues defined therein.*

*Any holder of this document is advised that information contained hereon reflects the Company's findings at the time of its intervention only and within the limits of Client's instructions, if any. The Company's sole responsibility is to its Client and this document does not exonerate parties to a transaction from exercising all their rights and obligations under the transaction documents. Any unauthorized alteration, forgery or falsification of the content or appearance of this document is unlawful and offenders may be prosecuted to the fullest extent of the law*

SGS

# Analysis Report

January 08, 2014

**PACIFICORP**
FIELD OFFICE
PO BOX 1005
HUNTINGTON UT 84528



| | | | |
|---|---|---|---|
| Client Sample ID: | Deer Creek Mine | Sample ID By: | PacifiCorp |
| Date Sampled: | Dec 18, 2013 | Sample Taken By: | VBJ |
| Date Received: | Dec 18, 2013 | Time Received: | 1500 |
| Product Description: | WATER | Time Sampled: | 1050 |
| | | Location: | 11 W #2 SEAL |
| | | Mine: | 4 |
| | | Field - pH: | 7.25 pH units |
| | | Field - Flow: | 4.29 GPM |
| | | Field - Temperature: | 15.7 DEG. C |

Comments: Dissolved Metals Filtered at Lab

**SGS Minerals Sample ID: 782-1322384-003**

| TESTS | RESULT | UNIT | METHOD | REPORTING LIMIT | ANALYZED DATE | ANALYZED TIME | ANALYST |
|---|---|---|---|---|---|---|---|
| Hardness, mg equivalent CaCO3/L | 283 | mg/L | SM2340-B | 1 | 2013-12-31 | 12:51:00 | AL |
| Acidity | 38 | mg/L | D1067 | 5 | 2013-12-18 | 15:00:00 | AL |
| Anions | 9.81 | meq/L | SM1030E | 0 | 2013-12-31 | 12:51:00 | AL |
| Balance | 0.15 | % | SM1030E | -10 | 2013-12-31 | 12:51:00 | AL |
| Cations | 9.84 | meq/L | SM1030E | 0 | 2013-12-31 | 12:51:00 | AL |
| Alkalinity, mg CaCO3/L (pH 4.5) | 442 | mg/L | SM2320-B | 5 | 2013-12-19 | 15:29:00 | DI |
| Bicarbonate Alkalinity as CaCO3 | 442 | mg/L | SM2320-B | 5 | 2013-12-19 | 15:29:00 | DI |
| Carbonate Alkalinity as CaCO3 | <5 | mg/L | SM2320-B | 5 | 2013-12-19 | 15:29:00 | DI |
| pH | 7.28 | | SM4500-H | 0.01 | 2013-12-18 | 15:19:00 | AL |
| pH Temperature | 16.20 | °C | SM4500-H | 0.01 | 2013-12-18 | 15:19:00 | AL |
| Conductivity | 900 | µmhos/cm | SM2510 | 0.1 | 2013-12-19 | 08:00:00 | AL |
| Total Dissolved Solids | 499 | mg/L | SM2540-C | 30 | 2013-12-19 | 13:45:00 | AL |
| Chloride, Cl | 8 | mg/L | EPA 300.0 | 1 | 2013-12-21 | 01:52:00 | AL |
| Sulfate, SO4 | 35 | mg/L | EPA 300.0 | 1 | 2013-12-21 | 01:52:00 | AL |
| **METALS BY ICP** | | | | | | | |
| Calcium, Ca - Dissolved | 73.30 | mg/L | EPA 200.7 | 0.03 | 2013-12-20 | 07:00:00 | AL |
| Iron, Fe - Total | 0.48 | mg/L | EPA 200.7 | 0.05 | 2013-12-30 | 12:18:00 | AL |
| Iron, Fe - Dissolved | <0.03 | mg/L | EPA 200.7 | 0.03 | 2013-12-20 | 07:00:00 | AL |
| Magnesium, Mg - Dissolved | 24.36 | mg/L | EPA 200.7 | 0.01 | 2013-12-20 | 07:00:00 | AL |
| Manganese, Mn - Total | 0.091 | mg/L | EPA 200.7 | 0.002 | 2013-12-30 | 12:18:00 | AL |

Lab Supervisor

Domenic Ibanez
Lab Supervisor

SGS North America Inc. | Minerals Services Division
2035 North Airport Road Huntington UT 84528 t (435) 653-2311 f (435)-653-2436 www.sgs.com/minerals

Member of the SGS Group (Société Générale de Surveillance)

*This document is issued by the Company under its General Conditions of Service accessible at http://www.sgs.com/terms_and_conditions.htm. Attention is drawn to the limitation of liability, indemnification and jurisdiction issues defined therein.*

*Any holder of this document is advised that information contained hereon reflects the Company's findings at the time of its intervention only and within the limits of Client's instructions, if any. The Company's sole responsibility is to its Client and this document does not exonerate parties to a transaction from exercising all their rights and obligations under the transaction documents. Any unauthorized alteration, forgery or falsification of the content or appearance of this document is unlawful and offenders may be prosecuted to the fullest extent of the law*

# Analysis Report

January 08, 2014

**PACIFICORP**
FIELD OFFICE
PO BOX 1005
HUNTINGTON UT 84528



| | | | |
|---|---|---|---|
| Client Sample ID: | Deer Creek Mine | Sample ID By: | PacifiCorp |
| Date Sampled: | Dec 18, 2013 | Sample Taken By: | VBJ |
| Date Received: | Dec 18, 2013 | Time Received: | 1500 |
| Product Description: | WATER | Time Sampled: | 1050 |
| | | Location: | 11 W #2 SEAL |
| | | Mine: | 4 |
| | | Field - pH: | 7.25 pH units |
| | | Field - Flow: | 4.29 GPM |
| | | Field - Temperature: | 15.7 DEG. C |

Comments: Dissolved Metals Filtered at Lab

**SGS Minerals Sample ID: 782-1322384-003**

| TESTS | RESULT | UNIT | METHOD | REPORTING LIMIT | ANALYZED DATE | ANALYZED TIME | ANALYST |
|---|---|---|---|---|---|---|---|
| **METALS BY ICP (continued)** | | | | | | | |
| Manganese, Mn - Dissolved | 0.086 | mg/L | EPA 200.7 | 0.002 | 2013-12-20 | 07:00:00 | AL |
| Potassium, K - Dissolved | 9.90 | mg/L | EPA 200.7 | 0.14 | 2013-12-20 | 07:00:00 | AL |
| Sodium, Na - Dissolved | 90.16 | mg/L | EPA 200.7 | 0.09 | 2013-12-20 | 07:00:00 | AL |

Lab Supervisor

Domenic Ibanez
Lab Supervisor

SGS North America Inc. | Minerals Services Division
2035 North Airport Road Huntington UT 84528 t (435) 653-2311 f (435)-653-2436 www.sgs.com/minerals

Member of the SGS Group (Société Générale de Surveillance)

*This document is issued by the Company under its General Conditions of Service accessible at http://www.sgs.com/terms_and_conditions.htm. Attention is drawn to the limitation of liability, indemnification and jurisdiction issues defined therein.*

*Any holder of this document is advised that information contained hereon reflects the Company's findings at the time of its intervention only and within the limits of Client's instructions, if any. The Company's sole responsibility is to its Client and this document does not exonerate parties to a transaction from exercising all their rights and obligations under the transaction documents. Any unauthorized alteration, forgery or falsification of the content or appearance of this document is unlawful and offenders may be prosecuted to the fullest extent of the law*

# Analysis Report

January 08, 2014

**PACIFICORP**
FIELD OFFICE
PO BOX 1005
HUNTINGTON UT 84528



| | | | |
|---|---|---|---|
| Client Sample ID: | Deer Creek Mine | Sample ID By: | PacifiCorp |
| Date Sampled: | Dec 18, 2013 | Sample Taken By: | VBJ |
| Date Received: | Dec 18, 2013 | Time Received: | 1500 |
| Product Description: | WATER | Time Sampled: | 1115 |
| | | Location: | 17 W #2 SEAL |
| | | Mine: | 4 |
| | | Field - pH: | 7.22 pH units |
| | | Field - Temperature: | 12.5 DEG. C |

Comments: Dissolved Metals Filtered at Lab

**SGS Minerals Sample ID: 782-1322384-004**

| TESTS | RESULT | UNIT | METHOD | REPORTING LIMIT | ANALYZED DATE | ANALYZED TIME | ANALYST |
|---|---|---|---|---|---|---|---|
| Hardness, mg equivalent CaCO3/L | 336 | mg/L | SM2340-B | 1 | 2013-12-31 | 12:51:00 | AL |
| Acidity | 36 | mg/L | D1067 | 5 | 2013-12-18 | 15:00:00 | AL |
| Anions | 9.28 | meq/L | SM1030E | 0 | 2013-12-31 | 12:51:00 | AL |
| Balance | 2.78 | % | SM1030E | -10 | 2013-12-31 | 12:51:00 | AL |
| Cations | 9.81 | meq/L | SM1030E | 0 | 2013-12-31 | 12:51:00 | AL |
| Alkalinity, mg CaCO3/L (pH 4.5) | 319 | mg/L | SM2320-B | 5 | 2013-12-31 | 12:41:50 | AL |
| Bicarbonate Alkalinity as CaCO3 | 319 | mg/L | SM2320-B | 5 | 2013-12-31 | 12:41:50 | AL |
| Carbonate Alkalinity as CaCO3 | <5 | mg/L | SM2320-B | 5 | 2013-12-31 | 12:41:50 | AL |
| pH | 7.48 | | SM4500-H | 0.01 | 2013-12-18 | 15:21:00 | AL |
| pH Temperature | 15.90 | °C | SM4500-H | 0.01 | 2013-12-18 | 15:21:00 | AL |
| Conductivity | 928 | µmhos/cm | SM2510 | 0.1 | 2013-12-19 | 08:00:00 | AL |
| Total Dissolved Solids | 536 | mg/L | SM2540-C | 30 | 2013-12-19 | 13:45:00 | AL |
| Chloride, Cl | 12 | mg/L | EPA 300.0 | 1 | 2013-12-21 | 01:52:00 | AL |
| Sulfate, SO4 | 124 | mg/L | EPA 300.0 | 1 | 2013-12-21 | 01:52:00 | AL |
| **METALS BY ICP** | | | | | | | |
| Calcium, Ca - Dissolved | 64.37 | mg/L | EPA 200.7 | 0.03 | 2013-12-20 | 07:00:00 | AL |
| Iron, Fe - Total | 2.53 | mg/L | EPA 200.7 | 0.05 | 2013-12-30 | 12:18:00 | AL |
| Iron, Fe - Dissolved | <0.03 | mg/L | EPA 200.7 | 0.03 | 2013-12-20 | 07:00:00 | AL |
| Magnesium, Mg - Dissolved | 42.46 | mg/L | EPA 200.7 | 0.01 | 2013-12-20 | 07:00:00 | AL |
| Manganese, Mn - Total | 0.023 | mg/L | EPA 200.7 | 0.002 | 2013-12-30 | 12:18:00 | AL |
| Manganese, Mn - Dissolved | 0.023 | mg/L | EPA 200.7 | 0.002 | 2013-12-20 | 07:00:00 | AL |

Lab Supervisor

Domenic Ibanez
Lab Supervisor

SGS North America Inc. | Minerals Services Division
2035 North Airport Road Huntington UT 84528 t (435) 653-2311 f (435)-653-2436 www.sgs.com/minerals

Member of the SGS Group (Société Générale de Surveillance)

*This document is issued by the Company under its General Conditions of Service accessible at http://www.sgs.com/terms_and_conditions.htm. Attention is drawn to the limitation of liability, indemnification and jurisdiction issues defined therein.*

*Any holder of this document is advised that information contained hereon reflects the Company's findings at the time of its intervention only and within the limits of Client's instructions, if any. The Company's sole responsibility is to its Client and this document does not exonerate parties to a transaction from exercising all their rights and obligations under the transaction documents. Any unauthorized alteration, forgery or falsification of the content or appearance of this document is unlawful and offenders may be prosecuted to the fullest extent of the law*

SGS

# Analysis Report

January 08, 2014

**PACIFICORP**
FIELD OFFICE
PO BOX 1005
HUNTINGTON UT 84528



| | | | |
|---|---|---|---|
| Client Sample ID: | Deer Creek Mine | Sample ID By: | PacifiCorp |
| Date Sampled: | Dec 18, 2013 | Sample Taken By: | VBJ |
| Date Received: | Dec 18, 2013 | Time Received: | 1500 |
| Product Description: | WATER | Time Sampled: | 1115 |
| | | Location: | 17 W #2 SEAL |
| | | Mine: | 4 |
| | | Field - pH: | 7.22 pH units |
| | | Field - Temperature: | 12.5 DEG. C |

Comments: Dissolved Metals Filtered at Lab

**SGS Minerals Sample ID: 782-1322384-004**

| TESTS | RESULT | UNIT | METHOD | REPORTING LIMIT | ANALYZED DATE | ANALYZED TIME | ANALYST |
|---|---|---|---|---|---|---|---|
| **METALS BY ICP (continued)** | | | | | | | |
| Potassium, K - Dissolved | 11.21 | mg/L | EPA 200.7 | 0.14 | 2013-12-20 | 07:00:00 | AL |
| Sodium, Na - Dissolved | 64.84 | mg/L | EPA 200.7 | 0.09 | 2013-12-20 | 07:00:00 | AL |

Lab Supervisor

Domenic Ibanez
Lab Supervisor

SGS North America Inc. | Minerals Services Division
2035 North Airport Road Huntington UT 84528 t (435) 653-2311 f (435)-653-2436 www.sgs.com/minerals

Member of the SGS Group (Société Générale de Surveillance)

*This document is issued by the Company under its General Conditions of Service accessible at http://www.sgs.com/terms_and_conditions.htm. Attention is drawn to the limitation of liability, indemnification and jurisdiction issues defined therein.*

*Any holder of this document is advised that information contained hereon reflects the Company's findings at the time of its intervention only and within the limits of Client's instructions, if any. The Company's sole responsibility is to its Client and this document does not exonerate parties to a transaction from exercising all their rights and obligations under the transaction documents. Any unauthorized alteration, forgery or falsification of the content or appearance of this document is unlawful and offenders may be prosecuted to the fullest extent of the law*

# Analysis Report

January 08, 2014

**PACIFICORP**
FIELD OFFICE
PO BOX 1005
HUNTINGTON UT 84528



| | | | |
|---|---|---|---|
| Client Sample ID: | Deer Creek Mine | Sample ID By: | PacifiCorp |
| Date Sampled: | Dec 18, 2013 | Sample Taken By: | VBJ |
| Date Received: | Dec 18, 2013 | Time Received: | 1500 |
| Product Description: | WATER | Time Sampled: | 1135 |
| | | Location: | 10 N XC-5 BOREHOLE |
| | | Mine: | 4 |
| | | Field - pH: | 7.26 pH units |
| | | Field - Flow: | ~50 GPM |
| | | Field - Temperature: | 11.6 DEG. C |

Comments: Dissolved Metals Filtered at Lab

**SGS Minerals Sample ID: 782-1322384-005**

| TESTS | RESULT | UNIT | METHOD | REPORTING LIMIT | ANALYZED DATE | ANALYZED TIME | ANALYST |
|---|---|---|---|---|---|---|---|
| Hardness, mg equivalent CaCO3/L | 381 | mg/L | SM2340-B | 1 | 2013-12-31 | 12:51:00 | AL |
| Acidity | 39 | mg/L | D1067 | 5 | 2013-12-18 | 15:00:00 | AL |
| Anions | 13.09 | meq/L | SM1030E | 0 | 2013-12-31 | 12:51:00 | AL |
| Balance | 2.48 | % | SM1030E | -10 | 2013-12-31 | 12:51:00 | AL |
| Cations | 13.75 | meq/L | SM1030E | 0 | 2013-12-31 | 12:51:00 | AL |
| Alkalinity, mg CaCO3/L (pH 4.5) | 455 | mg/L | SM2320-B | 5 | 2013-12-31 | 12:41:51 | AL |
| Bicarbonate Alkalinity as CaCO3 | 455 | mg/L | SM2320-B | 5 | 2013-12-31 | 12:41:51 | AL |
| Carbonate Alkalinity as CaCO3 | <5 | mg/L | SM2320-B | 5 | 2013-12-31 | 12:41:51 | AL |
| pH | 7.35 | | SM4500-H | 0.01 | 2013-12-18 | 15:23:00 | AL |
| pH Temperature | 16.70 | °C | SM4500-H | 0.01 | 2013-12-18 | 15:23:00 | AL |
| Conductivity | 1206 | µmhos/cm | SM2510 | 0.1 | 2013-12-19 | 08:00:00 | AL |
| Total Dissolved Solids | 733 | mg/L | SM2540-C | 30 | 2013-12-19 | 13:45:00 | AL |
| Chloride, Cl | 7 | mg/L | EPA 300.0 | 1 | 2013-12-21 | 01:52:00 | AL |
| Sulfate, SO4 | 182 | mg/L | EPA 300.0 | 1 | 2013-12-21 | 01:52:00 | AL |
| **METALS BY ICP** | | | | | | | |
| Calcium, Ca - Dissolved | 75.84 | mg/L | EPA 200.7 | 0.03 | 2013-12-20 | 07:00:00 | AL |
| Iron, Fe - Total | <0.05 | mg/L | EPA 200.7 | 0.05 | 2013-12-30 | 12:18:00 | AL |
| Iron, Fe - Dissolved | <0.03 | mg/L | EPA 200.7 | 0.03 | 2013-12-20 | 07:00:00 | AL |
| Magnesium, Mg - Dissolved | 46.46 | mg/L | EPA 200.7 | 0.01 | 2013-12-20 | 07:00:00 | AL |
| Manganese, Mn - Total | <0.002 | mg/L | EPA 200.7 | 0.002 | 2013-12-30 | 12:18:00 | AL |

Lab Supervisor

Domenic Ibanez
Lab Supervisor

SGS North America Inc. | Minerals Services Division
2035 North Airport Road Huntington UT 84528 t (435) 653-2311 f (435)-653-2436 www.sgs.com/minerals

Member of the SGS Group (Société Générale de Surveillance)

*This document is issued by the Company under its General Conditions of Service accessible at http://www.sgs.com/terms_and_conditions.htm. Attention is drawn to the limitation of liability, indemnification and jurisdiction issues defined therein.*

*Any holder of this document is advised that information contained hereon reflects the Company's findings at the time of its intervention only and within the limits of Client's instructions, if any. The Company's sole responsibility is to its Client and this document does not exonerate parties to a transaction from exercising all their rights and obligations under the transaction documents. Any unauthorized alteration, forgery or falsification of the content or appearance of this document is unlawful and offenders may be prosecuted to the fullest extent of the law*

# Analysis Report

January 08, 2014

**PACIFICORP**
FIELD OFFICE
PO BOX 1005
HUNTINGTON UT 84528



| | | | |
|---|---|---|---|
| Client Sample ID: | Deer Creek Mine | Sample ID By: | PacifiCorp |
| Date Sampled: | Dec 18, 2013 | Sample Taken By: | VBJ |
| Date Received: | Dec 18, 2013 | Time Received: | 1500 |
| Product Description: | WATER | Time Sampled: | 1135 |
| | | Location: | 10 N XC-5 BOREHOLE |
| | | Mine: | 4 |
| | | Field - pH: | 7.26 pH units |
| | | Field - Flow: | ~50 GPM |
| | | Field - Temperature: | 11.6 DEG. C |

Comments: Dissolved Metals Filtered at Lab

**SGS Minerals Sample ID: 782-1322384-005**

| TESTS | RESULT | UNIT | METHOD | REPORTING LIMIT | ANALYZED DATE | ANALYZED TIME | ANALYST |
|---|---|---|---|---|---|---|---|
| **METALS BY ICP (continued)** | | | | | | | |
| Manganese, Mn - Dissolved | <0.002 | mg/L | EPA 200.7 | 0.002 | 2013-12-20 | 07:00:00 | AL |
| Potassium, K - Dissolved | 11.35 | mg/L | EPA 200.7 | 0.14 | 2013-12-20 | 07:00:00 | AL |
| Sodium, Na - Dissolved | 134.65 | mg/L | EPA 200.7 | 0.09 | 2013-12-20 | 07:00:00 | AL |

Lab Supervisor

Domenic Ibanez
Lab Supervisor

SGS North America Inc. | Minerals Services Division
2035 North Airport Road Huntington UT 84528 t (435) 653-2311 f (435)-653-2436 www.sgs.com/minerals

Member of the SGS Group (Société Générale de Surveillance)

*This document is issued by the Company under its General Conditions of Service accessible at http://www.sgs.com/terms_and_conditions.htm. Attention is drawn to the limitation of liability, indemnification and jurisdiction issues defined therein.*

*Any holder of this document is advised that information contained hereon reflects the Company's findings at the time of its intervention only and within the limits of Client's instructions, if any. The Company's sole responsibility is to its Client and this document does not exonerate parties to a transaction from exercising all their rights and obligations under the transaction documents. Any unauthorized alteration, forgery or falsification of the content or appearance of this document is unlawful and offenders may be prosecuted to the fullest extent of the law*

SGS

# Analysis Report

February 04, 2014

**PACIFICORP**
FIELD OFFICE
PO BOX 1005
HUNTINGTON UT 84528



| | | | |
|---|---|---|---|
| Client Sample ID: | Deer Creek Mine | Sample ID By: | PacifiCorp |
| Date Sampled: | Jan 15, 2014 | Sample Taken By: | VBJ |
| Date Received: | Jan 15, 2014 | Time Received: | 1357 |
| Product Description: | WATER | Time Sampled: | 1012 |
| | | Location: | 11 W #2 Seal |
| | | Mine: | 4 |
| | | Field - pH: | 7.62 pH units |
| | | Field - Flow: | 4.6 GPM |
| | | Field - Temperature: | 15.7 DEG. C |

Comments: Dissolved Metals Filtered at Lab

**SGS Minerals Sample ID: 782-1422737-001**

| TESTS | RESULT | UNIT | METHOD | REPORTING LIMIT | ANALYZED DATE | ANALYZED TIME | ANALYST |
|---|---|---|---|---|---|---|---|
| Hardness, mg equivalent CaCO3/L | 295 | mg/L | SM2340-B | 1 | 2014-02-04 | 11:00:00 | DI |
| Acidity | 11 | mg/L | D1067 | 5 | 2014-01-23 | 13:00:00 | AL |
| Anions | 9.70 | meq/L | SM1030E | 0 | 2014-02-04 | 11:00:00 | DI |
| Balance | 1.57 | % | SM1030E | -10 | 2014-02-04 | 11:00:00 | DI |
| Cations | 10.01 | meq/L | SM1030E | 0 | 2014-02-04 | 11:00:00 | DI |
| Alkalinity, mg CaCO3/L (pH 4.5) | 440 | mg/L | SM2320-B | 5 | 2014-01-20 | 08:45:00 | AL |
| Bicarbonate Alkalinity as CaCO3 | 440 | mg/L | SM2320-B | 5 | 2014-01-20 | 08:45:00 | AL |
| Carbonate Alkalinity as CaCO3 | <5 | mg/L | SM2320-B | 5 | 2014-01-20 | 08:45:00 | AL |
| pH | 7.62 | | SM4500-H | 0.01 | 2014-01-16 | 09:35:00 | DI |
| pH Temperature | 19.20 | °C | SM4500-H | 0.01 | 2014-01-16 | 09:35:00 | DI |
| Conductivity | 913 | µmhos/cm | SM2510 | 0.1 | 2014-01-16 | 10:40:00 | DI |
| Total Dissolved Solids | 525 | mg/L | SM2540-C | 30 | 2014-01-16 | 14:10:00 | DI |
| Chloride, Cl | 8 | mg/L | EPA 300.0 | 1 | 2014-01-17 | 19:48:00 | DI |
| Sulfate, SO4 | 32 | mg/L | EPA 300.0 | 1 | 2014-01-17 | 19:48:00 | DI |
| **METALS BY ICP** | | | | | | | |
| Calcium, Ca - Dissolved | 75.86 | mg/L | EPA 200.7 | 0.03 | 2014-01-20 | 15:08:00 | AL |
| Iron, Fe - Total | 0.44 | mg/L | EPA 200.7 | 0.05 | 2014-01-20 | 11:36:00 | AL |
| Iron, Fe - Dissolved | <0.03 | mg/L | EPA 200.7 | 0.03 | 2014-01-20 | 15:08:00 | AL |
| Magnesium, Mg - Dissolved | 25.75 | mg/L | EPA 200.7 | 0.01 | 2014-01-20 | 15:08:00 | AL |
| Manganese, Mn - Total | 0.051 | mg/L | EPA 200.7 | 0.002 | 2014-01-20 | 11:36:00 | AL |

Lab Supervisor

Domenic Ibanez
Lab Supervisor

SGS North America Inc. | Minerals Services Division
2035 North Airport Road Huntington UT 84528 t (435) 653-2311 f (435)-653-2436 www.sgs.com/minerals

Member of the SGS Group (Société Générale de Surveillance)

*This document is issued by the Company under its General Conditions of Service accessible at http://www.sgs.com/terms_and_conditions.htm. Attention is drawn to the limitation of liability, indemnification and jurisdiction issues defined therein.*

*Any holder of this document is advised that information contained hereon reflects the Company's findings at the time of its intervention only and within the limits of Client's instructions, if any. The Company's sole responsibility is to its Client and this document does not exonerate parties to a transaction from exercising all their rights and obligations under the transaction documents. Any unauthorized alteration, forgery or falsification of the content or appearance of this document is unlawful and offenders may be prosecuted to the fullest extent of the law*

SGS

# Analysis Report

February 04, 2014

**PACIFICORP**
FIELD OFFICE
PO BOX 1005
HUNTINGTON UT 84528



| | | | |
|---|---|---|---|
| Client Sample ID: | Deer Creek Mine | Sample ID By: | PacifiCorp |
| Date Sampled: | Jan 15, 2014 | Sample Taken By: | VBJ |
| Date Received: | Jan 15, 2014 | Time Received: | 1357 |
| Product Description: | WATER | Time Sampled: | 1012 |
| | | Location: | 11 W #2 Seal |
| | | Mine: | 4 |
| | | Field - pH: | 7.62 pH units |
| | | Field - Flow: | 4.6 GPM |
| | | Field - Temperature: | 15.7 DEG. C |

Comments: Dissolved Metals Filtered at Lab

**SGS Minerals Sample ID: 782-1422737-001**

| TESTS | RESULT | UNIT | METHOD | REPORTING LIMIT | ANALYZED DATE | ANALYZED TIME | ANALYST |
|---|---|---|---|---|---|---|---|
| **METALS BY ICP (continued)** | | | | | | | |
| Manganese, Mn - Dissolved | 0.046 | mg/L | EPA 200.7 | 0.002 | 2014-01-20 | 15:08:00 | AL |
| Potassium, K - Dissolved | 9.84 | mg/L | EPA 200.7 | 0.14 | 2014-01-20 | 15:08:00 | AL |
| Sodium, Na - Dissolved | 88.52 | mg/L | EPA 200.7 | 0.09 | 2014-01-20 | 15:08:00 | AL |

Lab Supervisor

Domenic Ibanez
Lab Supervisor

SGS North America Inc. | Minerals Services Division
2035 North Airport Road Huntington UT 84528 t (435) 653-2311 f (435)-653-2436 www.sgs.com/minerals

Member of the SGS Group (Société Générale de Surveillance)

*This document is issued by the Company under its General Conditions of Service accessible at http://www.sgs.com/terms_and_conditions.htm. Attention is drawn to the limitation of liability, indemnification and jurisdiction issues defined therein.*

*Any holder of this document is advised that information contained hereon reflects the Company's findings at the time of its intervention only and within the limits of Client's instructions, if any. The Company's sole responsibility is to its Client and this document does not exonerate parties to a transaction from exercising all their rights and obligations under the transaction documents. Any unauthorized alteration, forgery or falsification of the content or appearance of this document is unlawful and offenders may be prosecuted to the fullest extent of the law*

# Analysis Report

February 04, 2014

**PACIFICORP**
FIELD OFFICE
PO BOX 1005
HUNTINGTON UT 84528



| | | | |
|---|---|---|---|
| Client Sample ID: | Deer Creek Mine | Sample ID By: | PacifiCorp |
| Date Sampled: | Jan 15, 2014 | Sample Taken By: | VBJ |
| Date Received: | Jan 15, 2014 | Time Received: | 1357 |
| Product Description: | WATER | Time Sampled: | 1037 |
| | | Location: | 17 W #2 Seal |
| | | Mine: | 4 |
| | | Field - pH: | 7.2 pH units |
| | | Field - Temperature: | 12.6 DEG. C |

Comments: Dissolved Metals Filtered at Lab

**SGS Minerals Sample ID: 782-1422737-002**

| TESTS | RESULT | UNIT | METHOD | REPORTING LIMIT | ANALYZED DATE | ANALYZED TIME | ANALYST |
|---|---|---|---|---|---|---|---|
| Hardness, mg equivalent CaCO3/L | 341 | mg/L | SM2340-B | 1 | 2014-02-04 | 11:00:00 | DI |
| Acidity | 17 | mg/L | D1067 | 5 | 2014-01-23 | 13:00:00 | AL |
| Anions | 9.75 | meq/L | SM1030E | 0 | 2014-02-04 | 11:00:00 | DI |
| Balance | 0.31 | % | SM1030E | -10 | 2014-02-04 | 11:00:00 | DI |
| Cations | 9.81 | meq/L | SM1030E | 0 | 2014-02-04 | 11:00:00 | DI |
| Alkalinity, mg CaCO3/L (pH 4.5) | 346 | mg/L | SM2320-B | 5 | 2014-01-20 | 08:45:00 | AL |
| Bicarbonate Alkalinity as CaCO3 | 346 | mg/L | SM2320-B | 5 | 2014-01-20 | 08:45:00 | AL |
| Carbonate Alkalinity as CaCO3 | <5 | mg/L | SM2320-B | 5 | 2014-01-20 | 08:45:00 | AL |
| pH | 7.33 | | SM4500-H | 0.01 | 2014-01-16 | 09:36:00 | DI |
| pH Temperature | 19.10 | °C | SM4500-H | 0.01 | 2014-01-16 | 09:36:00 | DI |
| Conductivity | 921 | µmhos/cm | SM2510 | 0.1 | 2014-01-16 | 10:40:00 | DI |
| Total Dissolved Solids | 542 | mg/L | SM2540-C | 30 | 2014-01-16 | 14:10:00 | DI |
| Chloride, Cl | 12 | mg/L | EPA 300.0 | 1 | 2014-01-17 | 19:48:00 | DI |
| Sulfate, SO4 | 120 | mg/L | EPA 300.0 | 1 | 2014-01-17 | 19:48:00 | DI |
| **METALS BY ICP** | | | | | | | |
| Calcium, Ca - Dissolved | 65.40 | mg/L | EPA 200.7 | 0.03 | 2014-01-20 | 15:08:00 | AL |
| Iron, Fe - Total | 2.15 | mg/L | EPA 200.7 | 0.05 | 2014-01-20 | 11:36:00 | AL |
| Iron, Fe - Dissolved | <0.03 | mg/L | EPA 200.7 | 0.03 | 2014-01-20 | 15:08:00 | AL |
| Magnesium, Mg - Dissolved | 43.19 | mg/L | EPA 200.7 | 0.01 | 2014-01-20 | 15:08:00 | AL |
| Manganese, Mn - Total | 0.024 | mg/L | EPA 200.7 | 0.002 | 2014-01-20 | 11:36:00 | AL |
| Manganese, Mn - Dissolved | 0.022 | mg/L | EPA 200.7 | 0.002 | 2014-01-20 | 15:08:00 | AL |

Lab Supervisor

Domenic Ibanez
Lab Supervisor

SGS North America Inc. | Minerals Services Division
2035 North Airport Road Huntington UT 84528 t (435) 653-2311 f (435)-653-2436 www.sgs.com/minerals

Member of the SGS Group (Société Générale de Surveillance)

*This document is issued by the Company under its General Conditions of Service accessible at http://www.sgs.com/terms_and_conditions.htm. Attention is drawn to the limitation of liability, indemnification and jurisdiction issues defined therein.*

*Any holder of this document is advised that information contained hereon reflects the Company's findings at the time of its intervention only and within the limits of Client's instructions, if any. The Company's sole responsibility is to its Client and this document does not exonerate parties to a transaction from exercising all their rights and obligations under the transaction documents. Any unauthorized alteration, forgery or falsification of the content or appearance of this document is unlawful and offenders may be prosecuted to the fullest extent of the law*

SGS

# Analysis Report

February 04, 2014

**PACIFICORP**
FIELD OFFICE
PO BOX 1005
HUNTINGTON UT 84528



| | | | |
|---|---|---|---|
| Client Sample ID: | Deer Creek Mine | Sample ID By: | PacifiCorp |
| Date Sampled: | Jan 15, 2014 | Sample Taken By: | VBJ |
| Date Received: | Jan 15, 2014 | Time Received: | 1357 |
| Product Description: | WATER | Time Sampled: | 1037 |
| | | Location: | 17 W #2 Seal |
| | | Mine: | 4 |
| | | Field - pH: | 7.2 pH units |
| | | Field - Temperature: | 12.6 DEG. C |

Comments: Dissolved Metals Filtered at Lab

**SGS Minerals Sample ID: 782-1422737-002**

| TESTS | RESULT | UNIT | METHOD | REPORTING LIMIT | ANALYZED DATE | ANALYZED TIME | ANALYST |
|---|---|---|---|---|---|---|---|
| **METALS BY ICP (continued)** | | | | | | | |
| Potassium, K - Dissolved | 10.58 | mg/L | EPA 200.7 | 0.14 | 2014-01-20 | 15:08:00 | AL |
| Sodium, Na - Dissolved | 62.58 | mg/L | EPA 200.7 | 0.09 | 2014-01-20 | 15:08:00 | AL |

Lab Supervisor

Domenic Ibanez
Lab Supervisor

SGS North America Inc. | Minerals Services Division
2035 North Airport Road Huntington UT 84528 t (435) 653-2311 f (435)-653-2436 www.sgs.com/minerals

Member of the SGS Group (Société Générale de Surveillance)

*This document is issued by the Company under its General Conditions of Service accessible at http://www.sgs.com/terms_and_conditions.htm. Attention is drawn to the limitation of liability, indemnification and jurisdiction issues defined therein.*

*Any holder of this document is advised that information contained hereon reflects the Company's findings at the time of its intervention only and within the limits of Client's instructions, if any. The Company's sole responsibility is to its Client and this document does not exonerate parties to a transaction from exercising all their rights and obligations under the transaction documents. Any unauthorized alteration, forgery or falsification of the content or appearance of this document is unlawful and offenders may be prosecuted to the fullest extent of the law*

# Analysis Report

February 04, 2014

**PACIFICORP**
FIELD OFFICE
PO BOX 1005
HUNTINGTON UT 84528



| | | | |
|---|---|---|---|
| Client Sample ID: | Deer Creek Mine | Sample ID By: | PacifiCorp |
| Date Sampled: | Jan 15, 2014 | Sample Taken By: | VBJ |
| Date Received: | Jan 15, 2014 | Time Received: | 1357 |
| Product Description: | WATER | Time Sampled: | 1057 |
| | | Location: | 10 N XC-5 Borehole |
| | | Mine: | 4 |
| | | Field - pH: | 7.17 pH units |
| | | Field - Flow: | ~50 GPM |
| | | Field - Temperature: | 11.6 DEG. C |

Comments: Dissolved Metals Filtered at Lab

**SGS Minerals Sample ID: 782-1422737-003**

| TESTS | RESULT | UNIT | METHOD | REPORTING LIMIT | ANALYZED DATE | ANALYZED TIME | ANALYST |
|---|---|---|---|---|---|---|---|
| Hardness, mg equivalent CaCO3/L | 391 | mg/L | SM2340-B | 1 | 2014-02-04 | 11:00:00 | DI |
| Acidity | 23 | mg/L | D1067 | 5 | 2014-01-23 | 13:00:00 | AL |
| Anions | 13.35 | meq/L | SM1030E | 0 | 2014-02-04 | 11:00:00 | DI |
| Balance | 1.29 | % | SM1030E | -10 | 2014-02-04 | 11:00:00 | DI |
| Cations | 13.70 | meq/L | SM1030E | 0 | 2014-02-04 | 11:00:00 | DI |
| Alkalinity, mg CaCO3/L (pH 4.5) | 469 | mg/L | SM2320-B | 5 | 2014-01-20 | 08:45:00 | AL |
| Bicarbonate Alkalinity as CaCO3 | 469 | mg/L | SM2320-B | 5 | 2014-01-20 | 08:45:00 | AL |
| Carbonate Alkalinity as CaCO3 | <5 | mg/L | SM2320-B | 5 | 2014-01-20 | 08:45:00 | AL |
| pH | 7.30 | | SM4500-H | 0.01 | 2014-01-16 | 09:38:00 | DI |
| pH Temperature | 19.50 | °C | SM4500-H | 0.01 | 2014-01-16 | 09:38:00 | DI |
| Conductivity | 1216 | µmhos/cm | SM2510 | 0.1 | 2014-01-16 | 10:40:00 | DI |
| Total Dissolved Solids | 749 | mg/L | SM2540-C | 30 | 2014-01-16 | 14:10:00 | DI |
| Chloride, Cl | 7 | mg/L | EPA 300.0 | 1 | 2014-01-17 | 19:48:00 | DI |
| Sulfate, SO4 | 182 | mg/L | EPA 300.0 | 1 | 2014-01-17 | 19:48:00 | DI |
| **METALS BY ICP** | | | | | | | |
| Calcium, Ca - Dissolved | 76.83 | mg/L | EPA 200.7 | 0.03 | 2014-02-04 | 10:00:00 | AL |
| Iron, Fe - Total | <0.05 | mg/L | EPA 200.7 | 0.05 | 2014-01-20 | 11:36:00 | AL |
| Iron, Fe - Dissolved | <0.03 | mg/L | EPA 200.7 | 0.03 | 2014-01-20 | 15:08:00 | AL |
| Magnesium, Mg - Dissolved | 48.45 | mg/L | EPA 200.7 | 0.01 | 2014-02-04 | 10:00:00 | AL |
| Manganese, Mn - Total | <0.002 | mg/L | EPA 200.7 | 0.002 | 2014-01-20 | 11:36:00 | AL |

Lab Supervisor

Domenic Ibanez
Lab Supervisor

SGS North America Inc. | Minerals Services Division
2035 North Airport Road Huntington UT 84528 t (435) 653-2311 f (435)-653-2436 www.sgs.com/minerals

Member of the SGS Group (Société Générale de Surveillance)

*This document is issued by the Company under its General Conditions of Service accessible at http://www.sgs.com/terms_and_conditions.htm. Attention is drawn to the limitation of liability, indemnification and jurisdiction issues defined therein.*

*Any holder of this document is advised that information contained hereon reflects the Company's findings at the time of its intervention only and within the limits of Client's instructions, if any. The Company's sole responsibility is to its Client and this document does not exonerate parties to a transaction from exercising all their rights and obligations under the transaction documents. Any unauthorized alteration, forgery or falsification of the content or appearance of this document is unlawful and offenders may be prosecuted to the fullest extent of the law*

SGS

# Analysis Report

February 04, 2014

**PACIFICORP**
FIELD OFFICE
PO BOX 1005
HUNTINGTON UT 84528



| | | | |
|---|---|---|---|
| Client Sample ID: | Deer Creek Mine | Sample ID By: | PacifiCorp |
| Date Sampled: | Jan 15, 2014 | Sample Taken By: | VBJ |
| Date Received: | Jan 15, 2014 | Time Received: | 1357 |
| Product Description: | WATER | Time Sampled: | 1057 |
| | | Location: | 10 N XC-5 Borehole |
| | | Mine: | 4 |
| | | Field - pH: | 7.17 pH units |
| | | Field - Flow: | ~50 GPM |
| | | Field - Temperature: | 11.6 DEG. C |

Comments: Dissolved Metals Filtered at Lab

**SGS Minerals Sample ID: 782-1422737-003**

| TESTS | RESULT | UNIT | METHOD | REPORTING LIMIT | ANALYZED DATE | ANALYZED TIME | ANALYST |
|---|---|---|---|---|---|---|---|
| **METALS BY ICP (continued)** | | | | | | | |
| Manganese, Mn - Dissolved | <0.002 | mg/L | EPA 200.7 | 0.002 | 2014-01-20 | 15:08:00 | AL |
| Potassium, K - Dissolved | 10.88 | mg/L | EPA 200.7 | 0.14 | 2014-02-04 | 10:00:00 | AL |
| Sodium, Na - Dissolved | 128.88 | mg/L | EPA 200.7 | 0.09 | 2014-02-04 | 10:00:00 | AL |

Lab Supervisor

Domenic Ibanez
Lab Supervisor

SGS North America Inc. | Minerals Services Division
2035 North Airport Road Huntington UT 84528 t (435) 653-2311 f (435)-653-2436 www.sgs.com/minerals

Member of the SGS Group (Société Générale de Surveillance)

*This document is issued by the Company under its General Conditions of Service accessible at http://www.sgs.com/terms_and_conditions.htm. Attention is drawn to the limitation of liability, indemnification and jurisdiction issues defined therein.*

*Any holder of this document is advised that information contained hereon reflects the Company's findings at the time of its intervention only and within the limits of Client's instructions, if any. The Company's sole responsibility is to its Client and this document does not exonerate parties to a transaction from exercising all their rights and obligations under the transaction documents. Any unauthorized alteration, forgery or falsification of the content or appearance of this document is unlawful and offenders may be prosecuted to the fullest extent of the law*

SGS

# Analysis Report

October 28, 2015

**PACIFICORP**
FIELD OFFICE
PO BOX 1005
HUNTINGTON UT 84528



| | | | |
|---|---|---|---|
| Client Sample ID: | Deer Creek Mine | Sample ID By: | PacifiCorp |
| Date Sampled: | Oct 12, 2015 | Sample Taken By: | CAS |
| Date Received: | Oct 13, 2015 | Time Received: | 0903 |
| Product Description: | WATER | Time Sampled: | 1100 |
| | | Location: | 17 w #2 SEAL |
| | | Mine: | 4 |
| | | Field - pH: | 7.65 pH units |
| | | Field - Conductivity: | 1045 UMHOS/CM |
| | | Field - Temperature: | 13.0 DEG. C |

Comments: Dissolved Metals Filtered at Lab

**SGS Minerals Sample ID: 782-1530993-001**

| TESTS | RESULT | UNIT | METHOD | REPORTING LIMIT | ANALYZED DATE | TIME | ANALYST |
|---|---|---|---|---|---|---|---|
| Hardness, mg equivalent CaCO3/L | 307 | mg/L | SM2340-B | 1 | 2015-10-26 | 17:17:00 | DI |
| Acidity | 8 | mg/L | D1067 | 5 | 2015-10-23 | 15:00:00 | HF |
| Anions | 9.22 | meq/L | SM1030E | 0 | 2015-10-26 | 17:17:00 | DI |
| Balance | -0.02 | % | SM1030E | -10 | 2015-10-26 | 17:17:00 | DI |
| Cations | 9.22 | meq/L | SM1030E | 0 | 2015-10-26 | 17:17:00 | DI |
| Oxygen, Dissolved | 6.9 | mg/L | SM 4500-O G | 0.1 | 2015-10-13 | 10:32:00 | HF |
| Alkalinity, mg CaCO3/L (pH 4.5) | 342 | mg/L | SM2320-B | 5 | 2015-10-13 | 16:11:00 | HF |
| Bicarbonate Alkalinity as CaCO3 | 342 | mg/L | SM2320-B | 5 | 2015-10-13 | 16:11:00 | HF |
| Carbonate Alkalinity as CaCO3 | <5 | mg/L | SM2320-B | 5 | 2015-10-13 | 16:11:00 | HF |
| pH | 7.34 | | SM4500-H | 0.01 | 2015-10-13 | 10:31:00 | HF |
| pH Temperature | 17.50 | °C | SM4500-H | 0.01 | 2015-10-13 | 10:31:00 | HF |
| Conductivity | 872 | µmhos/cm | SM2510 | 0.1 | 2015-10-13 | 10:00:00 | HF |
| Total Dissolved Solids | 511 | mg/L | SM2540-C | 30 | 2015-10-13 | 14:00:00 | MS |
| Chloride, Cl | 9 | mg/L | EPA 300.0 | 1 | 2015-10-16 | 14:23:30 | HF |
| Sulfate, SO4 | 101 | mg/L | EPA 300.0 | 1 | 2015-10-16 | 14:23:30 | HF |
| **METALS BY ICP** | | | | | | | |
| Calcium, Ca - Dissolved | 58.43 | mg/L | EPA 200.7 | 0.03 | 2015-10-22 | 16:20:00 | HF |
| Iron, Fe - Total | 1.85 | mg/L | EPA 200.7 | 0.05 | 2015-10-21 | 19:55:00 | HF |
| Iron, Fe - Dissolved | <0.03 | mg/L | EPA 200.7 | 0.03 | 2015-10-22 | 16:20:00 | HF |
| Magnesium, Mg - Dissolved | 39.09 | mg/L | EPA 200.7 | 0.01 | 2015-10-22 | 16:20:00 | HF |

Lab Supervisor

Domenic Ibanez
Lab Supervisor

SGS North America Inc. | Minerals Services Division
2035 North Airport Road Huntington UT 84528 t (435) 653-2311 f (435)-653-2436 www.sgs.com/minerals

Member of the SGS Group (Société Générale de Surveillance)

*This document is issued by the Company under its General Conditions of Service accessible at http://www.sgs.com/terms_and_conditions.htm. Attention is drawn to the limitation of liability, indemnification and jurisdiction issues defined therein.*

*Any holder of this document is advised that information contained hereon reflects the Company's findings at the time of its intervention only and within the limits of Client's instructions, if any. The Company's sole responsibility is to its Client and this document does not exonerate parties to a transaction from exercising all their rights and obligations under the transaction documents. Any unauthorized alteration, forgery or falsification of the content or appearance of this document is unlawful and offenders may be prosecuted to the fullest extent of the law*

SGS

# Analysis Report

October 28, 2015

**PACIFICORP**
FIELD OFFICE
PO BOX 1005
HUNTINGTON UT 84528



| | | | |
|---|---|---|---|
| Client Sample ID: | Deer Creek Mine | Sample ID By: | PacifiCorp |
| Date Sampled: | Oct 12, 2015 | Sample Taken By: | CAS |
| Date Received: | Oct 13, 2015 | Time Received: | 0903 |
| Product Description: | WATER | Time Sampled: | 1100 |
| | | Location: | 17 w #2 SEAL |
| | | Mine: | 4 |
| | | Field - pH: | 7.65 pH units |
| | | Field - Conductivity: | 1045 UMHOS/CM |
| | | Field - Temperature: | 13.0 DEG. C |

Comments: Dissolved Metals Filtered at Lab

**SGS Minerals Sample ID: 782-1530993-001**

| TESTS | RESULT | UNIT | METHOD | REPORTING LIMIT | ANALYZED DATE | TIME | ANALYST |
|---|---|---|---|---|---|---|---|
| **METALS BY ICP (continued)** | | | | | | | |
| Manganese, Mn - Total | 0.021 | mg/L | EPA 200.7 | 0.002 | 2015-10-21 | 19:55:00 | HF |
| Manganese, Mn - Dissolved | 0.021 | mg/L | EPA 200.7 | 0.002 | 2015-10-22 | 16:20:00 | HF |
| Potassium, K - Dissolved | 10.81 | mg/L | EPA 200.7 | 0.14 | 2015-10-22 | 16:20:00 | HF |
| Sodium, Na - Dissolved | 64.59 | mg/L | EPA 200.7 | 0.09 | 2015-10-22 | 16:20:00 | HF |

Lab Supervisor

Domenic Ibanez
Lab Supervisor

SGS North America Inc. | Minerals Services Division
2035 North Airport Road Huntington UT 84528 t (435) 653-2311 f (435)-653-2436 www.sgs.com/minerals

Member of the SGS Group (Société Générale de Surveillance)

*This document is issued by the Company under its General Conditions of Service accessible at http://www.sgs.com/terms_and_conditions.htm. Attention is drawn to the limitation of liability, indemnification and jurisdiction issues defined therein.*

*Any holder of this document is advised that information contained hereon reflects the Company's findings at the time of its intervention only and within the limits of Client's instructions, if any. The Company's sole responsibility is to its Client and this document does not exonerate parties to a transaction from exercising all their rights and obligations under the transaction documents. Any unauthorized alteration, forgery or falsification of the content or appearance of this document is unlawful and offenders may be prosecuted to the fullest extent of the law*

SGS

# Analysis Report

April 20, 2016

**PACIFICORP**
FIELD OFFICE
PO BOX 1005
HUNTINGTON UT 84528



| | | | |
|---|---|---|---|
| Client Sample ID: | 17 W #2 SEAL | Sample ID By: | PacifiCorp |
| Date Sampled: | Apr 7, 2016 | Sample Taken By: | CAS |
| Date Received: | Apr 7, 2016 | Time Received: | 1505 |
| Product Description: | WATER | Time Sampled: | 1119 |
| | | Sample Type: | DC-IN |
| | | Location: | 17 W #2 SEAL |
| | | Mine: | 4 |
| | | Field - pH: | 7.2 pH units |
| | | Field - Flow: | 300 GPM |
| | | Field - Conductivity: | 964 UMHOS/CM |
| | | Field - Temperature: | 12.3 DEG. C |

Comments: Dissolved Metals Filtered at Lab

**SGS Minerals Sample ID: 782-1635351-001**

| TESTS | RESULT | UNIT | METHOD | REPORTING LIMIT | ANALYZED DATE | ANALYZED TIME | ANALYST |
|---|---|---|---|---|---|---|---|
| Hardness, mg equivalent CaCO3/L | 330 | mg/L | SM2340-B | 1 | 2016-04-20 | 13:00:00 | HF |
| Acidity | 8 | mg/L | D1067 | 5 | 2016-04-20 | 12:30:00 | HF |
| Anions | 9.52 | meq/L | SM1030E | 0 | 2016-04-20 | 13:00:00 | HF |
| Balance | 1.31 | % | SM1030E | -10 | 2016-04-20 | 13:00:00 | HF |
| Cations | 9.77 | meq/L | SM1030E | 0 | 2016-04-20 | 13:00:00 | HF |
| Oxygen, Dissolved | 5.0 | mg/L | SM 4500-O G | 0.1 | 2016-04-08 | 09:40:00 | MS |
| Alkalinity, mg CaCO3/L (pH 4.5) | 360 | mg/L | SM2320-B | 5 | 2016-04-20 | 09:00:00 | MS |
| Bicarbonate Alkalinity as CaCO3 | 360 | mg/L | SM2320-B | 5 | 2016-04-20 | 09:00:00 | MS |
| Carbonate Alkalinity as CaCO3 | <5 | mg/L | SM2320-B | 5 | 2016-04-20 | 09:00:00 | MS |
| pH | 7.39 | | SM4500-H | 0.01 | 2016-04-08 | 08:16:00 | MS |
| pH Temperature | 17.50 | °C | SM4500-H | 0.01 | 2016-04-08 | 08:16:00 | MS |
| Conductivity | 721 | µmhos/cm | SM2510 | 0.1 | 2016-04-08 | 08:00:00 | MS |
| Total Dissolved Solids | 509 | mg/L | SM2540-C | 30 | 2016-04-12 | 08:00:00 | MS |
| Chloride, Cl | 11 | mg/L | EPA 300.0 | 1 | 2016-04-15 | 13:07:00 | HF |
| Sulfate, SO4 | 96 | mg/L | EPA 300.0 | 1 | 2016-04-15 | 13:07:00 | HF |
| **METALS BY ICP** | | | | | | | |
| Calcium, Ca - Dissolved | 61.73 | mg/L | EPA 200.7 | 0.03 | 2016-04-19 | 12:26:00 | HF |
| Iron, Fe - Total | 2.73 | mg/L | EPA 200.7 | 0.05 | 2016-04-14 | 09:55:00 | HF |

Lab Supervisor

Domenic Ibanez
Lab Supervisor

SGS North America Inc. | Minerals Services Division
2035 North Airport Road Huntington UT 84528 t (435) 653-2311 f (435)-653-2436 www.sgs.com/minerals

Member of the SGS Group (Société Générale de Surveillance)

*This document is issued by the Company under its General Conditions of Service accessible at http://www.sgs.com/terms_and_conditions.htm. Attention is drawn to the limitation of liability, indemnification and jurisdiction issues defined therein.*

*Any holder of this document is advised that information contained hereon reflects the Company's findings at the time of its intervention only and within the limits of Client's instructions, if any. The Company's sole responsibility is to its Client and this document does not exonerate parties to a transaction from exercising all their rights and obligations under the transaction documents. Any unauthorized alteration, forgery or*

SGS

# Analysis Report

April 20, 2016

**PACIFICORP**
FIELD OFFICE
PO BOX 1005
HUNTINGTON UT 84528



| | | | |
|---|---|---|---|
| Client Sample ID: | 17 W #2 SEAL | Sample ID By: | PacifiCorp |
| Date Sampled: | Apr 7, 2016 | Sample Taken By: | CAS |
| Date Received: | Apr 7, 2016 | Time Received: | 1505 |
| Product Description: | WATER | Time Sampled: | 1119 |
| | | Sample Type: | DC-IN |
| | | Location: | 17 W #2 SEAL |
| | | Mine: | 4 |
| | | Field - pH: | 7.2 pH units |
| | | Field - Flow: | 300 GPM |
| | | Field - Conductivity: | 964 UMHOS/CM |
| | | Field - Temperature: | 12.3 DEG. C |

Comments: Dissolved Metals Filtered at Lab

**SGS Minerals Sample ID: 782-1635351-001**

| TESTS | RESULT | UNIT | METHOD | REPORTING LIMIT | ANALYZED DATE | ANALYZED TIME | ANALYST |
|---|---|---|---|---|---|---|---|
| **METALS BY ICP (continued)** | | | | | | | |
| Iron, Fe - Dissolved | <0.03 | mg/L | EPA 200.7 | 0.03 | 2016-04-19 | 12:26:00 | HF |
| Magnesium, Mg - Dissolved | 42.67 | mg/L | EPA 200.7 | 0.01 | 2016-04-19 | 12:26:00 | HF |
| Manganese, Mn - Total | 0.021 | mg/L | EPA 200.7 | 0.002 | 2016-04-14 | 09:55:00 | HF |
| Manganese, Mn - Dissolved | 0.019 | mg/L | EPA 200.7 | 0.002 | 2016-04-19 | 12:26:00 | HF |
| Potassium, K - Dissolved | 10.73 | mg/L | EPA 200.7 | 0.14 | 2016-04-19 | 12:26:00 | HF |
| Sodium, Na - Dissolved | 66.75 | mg/L | EPA 200.7 | 0.09 | 2016-04-19 | 12:26:00 | HF |

Lab Supervisor

Domenic Ibanez
Lab Supervisor

SGS North America Inc. | Minerals Services Division
2035 North Airport Road Huntington UT 84528 t (435) 653-2311 f (435)-653-2436 www.sgs.com/minerals

Member of the SGS Group (Société Générale de Surveillance)

*This document is issued by the Company under its General Conditions of Service accessible at http://www.sgs.com/terms_and_conditions.htm. Attention is drawn to the limitation of liability, indemnification and jurisdiction issues defined therein.*

*Any holder of this document is advised that information contained hereon reflects the Company's findings at the time of its intervention only and within the limits of Client's instructions, if any. The Company's sole responsibility is to its Client and this document does not exonerate parties to a transaction from exercising all their rights and obligations under the transaction documents. Any unauthorized alteration, forgery or*

# Analysis Report

June 09, 2016

**PACIFICORP**
FIELD OFFICE
PO BOX 1005
HUNTINGTON UT 84528



| | | | |
|---|---|---|---|
| Client Sample ID: | Deer Creek Mine 11th-17th seals | Sample ID By: | PacifiCorp |
| Date Sampled: | May 26, 2016 | Sample Taken By: | CAS |
| Date Received: | May 26, 2016 | Time Received: | 1341 |
| Product Description: | WATER | Time Sampled: | 1029 |
| | | Location: | 11TH-17TH SEALS |
| | | Mine: | 4 |
| | | Field - pH: | 7.64 pH units |
| | | Field - Conductivity: | 926 UMHOS/CM |
| | | Field - Temperature: | 13.1 DEG. C |

Comments: Dissolved Metals Filtered at Lab

**SGS Minerals Sample ID: 782-1636822-001**

| TESTS | RESULT | UNIT | METHOD | REPORTING LIMIT | ANALYZED DATE | TIME | ANALYST |
|---|---|---|---|---|---|---|---|
| Hardness, mg equivalent CaCO3/L | 324 | mg/L | SM2340-B | 1 | 2016-06-07 | 14:00:00 | HF |
| Acidity | 17 | mg/L | D1067 | 5 | 2016-06-03 | 10:00:00 | HF |
| Anions | 9.44 | meq/L | SM1030E | 0 | 2016-06-07 | 14:00:00 | HF |
| Balance | 0.32 | % | SM1030E | -10 | 2016-06-07 | 14:00:00 | HF |
| Cations | 9.50 | meq/L | SM1030E | 0 | 2016-06-07 | 14:00:00 | HF |
| Alkalinity, mg CaCO3/L (pH 4.5) | 356 | mg/L | SM2320-B | 5 | 2016-05-31 | 14:00:00 | MS |
| Bicarbonate Alkalinity as CaCO3 | 356 | mg/L | SM2320-B | 5 | 2016-05-31 | 14:00:00 | MS |
| Carbonate Alkalinity as CaCO3 | <5 | mg/L | SM2320-B | 5 | 2016-05-31 | 14:00:00 | MS |
| pH | 7.47 | | SM4500-H | 0.01 | 2016-05-27 | 08:05:00 | MS |
| pH Temperature | 20.70 | °C | SM4500-H | 0.01 | 2016-05-27 | 08:05:00 | MS |
| Conductivity | 864 | µmhos/cm | SM2510 | 0.1 | 2016-05-27 | 08:00:00 | MS |
| Total Dissolved Solids | 491 | mg/L | SM2540-C | 30 | 2016-05-31 | 15:00:00 | HF |
| Chloride, Cl | 12 | mg/L | EPA 300.0 | 1 | 2016-06-06 | 21:30:00 | HF |
| Sulfate, SO4 | 96 | mg/L | EPA 300.0 | 1 | 2016-06-06 | 21:30:00 | HF |
| **METALS BY ICP** | | | | | | | |
| Calcium, Ca - Dissolved | 61.66 | mg/L | EPA 200.7 | 0.03 | 2016-06-01 | 10:00:00 | HF |
| Iron, Fe - Total | 1.21 | mg/L | EPA 200.7 | 0.05 | 2016-05-31 | 09:00:00 | HF |
| Iron, Fe - Dissolved | <0.03 | mg/L | EPA 200.7 | 0.03 | 2016-06-01 | 10:00:00 | HF |
| Magnesium, Mg - Dissolved | 41.24 | mg/L | EPA 200.7 | 0.01 | 2016-06-01 | 10:00:00 | HF |
| Manganese, Mn - Total | 0.020 | mg/L | EPA 200.7 | 0.002 | 2016-05-31 | 09:00:00 | HF |

Lab Supervisor

Domenic Ibanez
Lab Supervisor

SGS North America Inc. | Minerals Services Division
2035 North Airport Road Huntington UT 84528 t (435) 653-2311 f (435)-653-2436 www.sgs.com/minerals

Member of the SGS Group (Société Générale de Surveillance)

*This document is issued by the Company under its General Conditions of Service accessible at http://www.sgs.com/terms_and_conditions.htm. Attention is drawn to the limitation of liability, indemnification and jurisdiction issues defined therein.*

*Any holder of this document is advised that information contained hereon reflects the Company's findings at the time of its intervention only and within the limits of Client's instructions, if any. The Company's sole responsibility is to its Client and this document does not exonerate parties to a transaction from exercising all their rights and obligations under the transaction documents. Any unauthorized alteration, forgery or falsification of the content or appearance of this document is unlawful and offenders may be prosecuted to the fullest extent of the law*

SGS

# Analysis Report

June 09, 2016

**PACIFICORP**
FIELD OFFICE
PO BOX 1005
HUNTINGTON UT 84528



| | | | |
|---|---|---|---|
| Client Sample ID: | Deer Creek Mine 11th-17th seals | Sample ID By: | PacifiCorp |
| Date Sampled: | May 26, 2016 | Sample Taken By: | CAS |
| Date Received: | May 26, 2016 | Time Received: | 1341 |
| Product Description: | WATER | Time Sampled: | 1029 |
| | | Location: | 11TH-17TH SEALS |
| | | Mine: | 4 |
| | | Field - pH: | 7.64 pH units |
| | | Field - Conductivity: | 926 UMHOS/CM |
| | | Field - Temperature: | 13.1 DEG. C |

Comments: Dissolved Metals Filtered at Lab

**SGS Minerals Sample ID: 782-1636822-001**

| TESTS | RESULT | UNIT | METHOD | REPORTING LIMIT | ANALYZED DATE | ANALYZED TIME | ANALYST |
|---|---|---|---|---|---|---|---|
| **METALS BY ICP (continued)** | | | | | | | |
| Manganese, Mn - Dissolved | 0.019 | mg/L | EPA 200.7 | 0.002 | 2016-06-01 | 10:00:00 | HF |
| Potassium, K - Dissolved | 9.73 | mg/L | EPA 200.7 | 0.14 | 2016-06-01 | 10:00:00 | HF |
| Sodium, Na - Dissolved | 63.93 | mg/L | EPA 200.7 | 0.09 | 2016-06-01 | 10:00:00 | HF |

Lab Supervisor

Domenic Ibanez
Lab Supervisor

SGS North America Inc. | Minerals Services Division
2035 North Airport Road Huntington UT 84528 t (435) 653-2311 f (435)-653-2436 www.sgs.com/minerals

Member of the SGS Group (Société Générale de Surveillance)

*This document is issued by the Company under its General Conditions of Service accessible at http://www.sgs.com/terms_and_conditions.htm. Attention is drawn to the limitation of liability, indemnification and jurisdiction issues defined therein.*

*Any holder of this document is advised that information contained hereon reflects the Company's findings at the time of its intervention only and within the limits of Client's instructions, if any. The Company's sole responsibility is to its Client and this document does not exonerate parties to a transaction from exercising all their rights and obligations under the transaction documents. Any unauthorized alteration, forgery or falsification of the content or appearance of this document is unlawful and offenders may be prosecuted to the fullest extent of the law*

SGS

# Analysis Report

June 09, 2016

**PACIFICORP**
FIELD OFFICE
PO BOX 1005
HUNTINGTON UT 84528



| | | | |
|---|---|---|---|
| Client Sample ID: | Deer Creek Mine 1st RT XC-26 | Sample ID By: | PacifiCorp |
| Date Sampled: | May 26, 2016 | Sample Taken By: | CAS |
| Date Received: | May 26, 2016 | Time Received: | 1341 |
| Product Description: | WATER | Time Sampled: | 1100 |
| | | Location: | 1ST RT XC-26 |
| | | Mine: | 4 |
| | | Field - pH: | 8.56 pH units |
| | | Field - Conductivity: | 450 UMHOS/CM |
| | | Field - Temperature: | 2.9 DEG. C |

Comments: Dissolved Metals Filtered at Lab

**SGS Minerals Sample ID: 782-1636822-002**

| TESTS | RESULT | UNIT | METHOD | REPORTING LIMIT | ANALYZED DATE | ANALYZED TIME | ANALYST |
|---|---|---|---|---|---|---|---|
| Hardness, mg equivalent CaCO3/L | 226 | mg/L | SM2340-B | 1 | 2016-06-07 | 14:00:00 | HF |
| Acidity | <5 | mg/L | D1067 | 5 | 2016-06-03 | 10:00:00 | HF |
| Anions | 4.98 | meq/L | SM1030E | 0 | 2016-06-07 | 14:00:00 | HF |
| Balance | 0.82 | % | SM1030E | -10 | 2016-06-07 | 14:00:00 | HF |
| Cations | 5.06 | meq/L | SM1030E | 0 | 2016-06-07 | 14:00:00 | HF |
| Alkalinity, mg CaCO3/L (pH 4.5) | 195 | mg/L | SM2320-B | 5 | 2016-05-31 | 14:00:00 | MS |
| Bicarbonate Alkalinity as CaCO3 | 195 | mg/L | SM2320-B | 5 | 2016-05-31 | 14:00:00 | MS |
| Carbonate Alkalinity as CaCO3 | <5 | mg/L | SM2320-B | 5 | 2016-05-31 | 14:00:00 | MS |
| pH | 8.23 | | SM4500-H | 0.01 | 2016-05-27 | 08:06:00 | MS |
| pH Temperature | 20.10 | °C | SM4500-H | 0.01 | 2016-05-27 | 08:06:00 | MS |
| Conductivity | 466 | µmhos/cm | SM2510 | 0.1 | 2016-05-27 | 08:00:00 | MS |
| Total Dissolved Solids | 260 | mg/L | SM2540-C | 30 | 2016-05-31 | 15:00:00 | HF |
| Chloride, Cl | 6 | mg/L | EPA 300.0 | 1 | 2016-06-06 | 21:30:00 | HF |
| Sulfate, SO4 | 43 | mg/L | EPA 300.0 | 1 | 2016-06-06 | 21:30:00 | HF |
| **METALS BY ICP** | | | | | | | |
| Calcium, Ca - Dissolved | 32.71 | mg/L | EPA 200.7 | 0.03 | 2016-06-01 | 10:00:00 | HF |
| Iron, Fe - Total | 0.49 | mg/L | EPA 200.7 | 0.05 | 2016-05-31 | 09:00:00 | HF |
| Iron, Fe - Dissolved | <0.03 | mg/L | EPA 200.7 | 0.03 | 2016-06-01 | 10:00:00 | HF |
| Magnesium, Mg - Dissolved | 35.15 | mg/L | EPA 200.7 | 0.01 | 2016-06-01 | 10:00:00 | HF |
| Manganese, Mn - Total | 0.003 | mg/L | EPA 200.7 | 0.002 | 2016-05-31 | 09:00:00 | HF |

Lab Supervisor

Domenic Ibanez
Lab Supervisor

SGS North America Inc. | Minerals Services Division
2035 North Airport Road Huntington UT 84528 t (435) 653-2311 f (435)-653-2436 www.sgs.com/minerals

Member of the SGS Group (Société Générale de Surveillance)

*This document is issued by the Company under its General Conditions of Service accessible at http://www.sgs.com/terms_and_conditions.htm. Attention is drawn to the limitation of liability, indemnification and jurisdiction issues defined therein.*

*Any holder of this document is advised that information contained hereon reflects the Company's findings at the time of its intervention only and within the limits of Client's instructions, if any. The Company's sole responsibility is to its Client and this document does not exonerate parties to a transaction from exercising all their rights and obligations under the transaction documents. Any unauthorized alteration, forgery or falsification of the content or appearance of this document is unlawful and offenders may be prosecuted to the fullest extent of the law*

SGS

# Analysis Report

June 09, 2016

**PACIFICORP**
FIELD OFFICE
PO BOX 1005
HUNTINGTON UT 84528



| | | | |
|---|---|---|---|
| Client Sample ID: | Deer Creek Mine 1st RT XC-26 | Sample ID By: | PacifiCorp |
| Date Sampled: | May 26, 2016 | Sample Taken By: | CAS |
| Date Received: | May 26, 2016 | Time Received: | 1341 |
| Product Description: | WATER | Time Sampled: | 1100 |
| | | Location: | 1ST RT XC-26 |
| | | Mine: | 4 |
| | | Field - pH: | 8.56 pH units |
| | | Field - Conductivity: | 450 UMHOS/CM |
| | | Field - Temperature: | 2.9 DEG. C |

Comments: Dissolved Metals Filtered at Lab

**SGS Minerals Sample ID: 782-1636822-002**

| TESTS | RESULT | UNIT | METHOD | REPORTING LIMIT | ANALYZED DATE | ANALYZED TIME | ANALYST |
|---|---|---|---|---|---|---|---|
| **METALS BY ICP (continued)** | | | | | | | |
| Manganese, Mn - Dissolved | <0.002 | mg/L | EPA 200.7 | 0.002 | 2016-06-01 | 10:00:00 | HF |
| Potassium, K - Dissolved | 1.09 | mg/L | EPA 200.7 | 0.14 | 2016-06-01 | 10:00:00 | HF |
| Sodium, Na - Dissolved | 11.79 | mg/L | EPA 200.7 | 0.09 | 2016-06-01 | 10:00:00 | HF |

Lab Supervisor

Domenic Ibanez
Lab Supervisor

SGS North America Inc. | Minerals Services Division
2035 North Airport Road Huntington UT 84528 t (435) 653-2311 f (435)-653-2436 www.sgs.com/minerals

Member of the SGS Group (Société Générale de Surveillance)

*This document is issued by the Company under its General Conditions of Service accessible at http://www.sgs.com/terms_and_conditions.htm. Attention is drawn to the limitation of liability, indemnification and jurisdiction issues defined therein.*

*Any holder of this document is advised that information contained hereon reflects the Company's findings at the time of its intervention only and within the limits of Client's instructions, if any. The Company's sole responsibility is to its Client and this document does not exonerate parties to a transaction from exercising all their rights and obligations under the transaction documents. Any unauthorized alteration, forgery or falsification of the content or appearance of this document is unlawful and offenders may be prosecuted to the fullest extent of the law*

# Analysis Report

June 23, 2016

**PACIFICORP**
FIELD OFFICE
PO BOX 1005
HUNTINGTON UT 84528



| | | | |
|---|---|---|---|
| Client Sample ID: | [illegible] | Sample ID By: | PacifiCorp |
| Date Sampled: | Jun 9, 2016 | Sample Taken By: | CAS |
| Date Received: | Jun 9, 2016 | Time Received: | 1505 |
| Product Description: | WATER | Time Sampled: | 1132 |
| | | Location: | |
| | | Mine: | 4 |
| | | Field - pH: | 7.83 pH units |
| | | Field - Conductivity: | 1045 UMHOS/CM |
| | | Field - Temperature: | 13.2 DEG. C |

Comments: Dissolved Metals Filtered at Lab

**SGS Minerals Sample ID: 782-1637261-001**

| TESTS | RESULT | UNIT | METHOD | REPORTING LIMIT | ANALYZED DATE | ANALYZED TIME | ANALYST |
|---|---|---|---|---|---|---|---|
| Hardness, mg equivalent CaCO3/L | 388 | mg/L | SM2340-B | 1 | 2016-06-23 | 13:00:00 | HF |
| Acidity | 24 | mg/L | D1067 | 5 | 2016-06-16 | 13:00:00 | HF |
| Anions | 10.26 | meq/L | SM1030E | 0 | 2016-06-23 | 13:00:00 | HF |
| Balance | 2.74 | % | SM1030E | -10 | 2016-06-23 | 13:00:00 | HF |
| Cations | 10.83 | meq/L | SM1030E | 0 | 2016-06-23 | 13:00:00 | HF |
| Oxygen, Dissolved | 4.2 | mg/L | SM 4500-O G | 0.1 | 2016-06-10 | 15:10:00 | HF |
| Alkalinity, mg CaCO3/L (pH 4.5) | 359 | mg/L | SM2320-B | 5 | 2016-06-17 | 13:00:00 | MS |
| Bicarbonate Alkalinity as CaCO3 | 359 | mg/L | SM2320-B | 5 | 2016-06-17 | 13:00:00 | MS |
| Carbonate Alkalinity as CaCO3 | <5 | mg/L | SM2320-B | 5 | 2016-06-17 | 13:00:00 | MS |
| pH | 7.30 | | SM4500-H | 0.01 | 2016-06-10 | 14:57:06 | MS |
| pH Temperature | 13.90 | °C | SM4500-H | 0.01 | 2016-06-10 | 14:57:06 | MS |
| Conductivity | 703 | µmhos/cm | SM2510 | 0.1 | 2016-06-10 | 14:57:06 | MS |
| Total Dissolved Solids | 497 | mg/L | SM2540-C | 30 | 2016-06-14 | 15:00:00 | MS |
| Chloride, Cl | 10 | mg/L | EPA 300.0 | 1 | 2016-06-22 | 13:00:00 | HF |
| Sulfate, SO4 | 93 | mg/L | EPA 300.0 | 1 | 2016-06-22 | 13:00:00 | HF |
| **METALS BY ICP** | | | | | | | |
| Calcium, Ca - Dissolved | 72.50 | mg/L | EPA 200.7 | 0.03 | 2016-06-15 | 19:00:00 | HF |
| Iron, Fe - Total | 1.21 | mg/L | EPA 200.7 | 0.05 | 2016-06-16 | 12:01:02 | HF |
| Iron, Fe - Dissolved | <0.03 | mg/L | EPA 200.7 | 0.03 | 2016-06-15 | 19:00:00 | HF |
| Magnesium, Mg - Dissolved | 50.32 | mg/L | EPA 200.7 | 0.01 | 2016-06-15 | 19:00:00 | HF |

Lab Supervisor

Domenic Ibanez
Lab Supervisor

SGS North America Inc. | Minerals Services Division
2035 North Airport Road Huntington UT 84528 t (435) 653-2311 f (435)-653-2436 www.sgs.com/minerals

Member of the SGS Group (Société Générale de Surveillance)

*This document is issued by the Company under its General Conditions of Service accessible at http://www.sgs.com/terms_and_conditions.htm. Attention is drawn to the limitation of liability, indemnification and jurisdiction issues defined therein.*

*Any holder of this document is advised that information contained hereon reflects the Company's findings at the time of its intervention only and within the limits of Client's instructions, if any. The Company's sole responsibility is to its Client and this document does not exonerate parties to a transaction from exercising all their rights and obligations under the transaction documents. Any unauthorized alteration, forgery or falsification of the content or appearance of this document is unlawful and offenders may be prosecuted to the fullest extent of the law*

# Analysis Report

June 23, 2016

**PACIFICORP**
FIELD OFFICE
PO BOX 1005
HUNTINGTON UT 84528



11th W - 17th W

| | | | |
|---|---|---|---|
| Client Sample ID: | ~~17 W #2 Seal~~ | Sample ID By: | PacifiCorp |
| Date Sampled: | Jun 9, 2016 | Sample Taken By: | CAS |
| Date Received: | Jun 9, 2016 | Time Received: | 1505 |
| Product Description: | WATER | Time Sampled: | 1132 |
| | | Location: | 17 W #2 Seal |
| | | Mine: | 4 |
| | | Field - pH: | 7.83 pH units |
| | | Field - Conductivity: | 1045 UMHOS/CM |
| | | Field - Temperature: | 13.2 DEG. C |

Comments: Dissolved Metals Filtered at Lab

**SGS Minerals Sample ID: 782-1637261-001**

| TESTS | RESULT | UNIT | METHOD | REPORTING LIMIT | ANALYZED DATE | TIME | ANALYST |
|---|---|---|---|---|---|---|---|
| **METALS BY ICP (continued)** | | | | | | | |
| Manganese, Mn - Total | 0.024 | mg/L | EPA 200.7 | 0.002 | 2016-06-16 | 12:01:02 | HF |
| Manganese, Mn - Dissolved | 0.024 | mg/L | EPA 200.7 | 0.002 | 2016-06-15 | 19:00:00 | HF |
| Potassium, K - Dissolved | 10.20 | mg/L | EPA 200.7 | 0.14 | 2016-06-15 | 19:00:00 | HF |
| Sodium, Na - Dissolved | 64.74 | mg/L | EPA 200.7 | 0.09 | 2016-06-15 | 19:00:00 | HF |

Lab Supervisor

Domenic Ibanez
Lab Supervisor

SGS North America Inc. | Minerals Services Division
2035 North Airport Road Huntington UT 84528 t (435) 653-2311 f (435)-653-2436 www.sgs.com/minerals

Member of the SGS Group (Société Générale de Surveillance)

*This document is issued by the Company under its General Conditions of Service accessible at http://www.sgs.com/terms_and_conditions.htm. Attention is drawn to the limitation of liability, indemnification and jurisdiction issues defined therein.*

*Any holder of this document is advised that information contained hereon reflects the Company's findings at the time of its intervention only and within the limits of Client's instructions, if any. The Company's sole responsibility is to its Client and this document does not exonerate parties to a transaction from exercising all their rights and obligations under the transaction documents. Any unauthorized alteration, forgery or falsification of the content or appearance of this document is unlawful and offenders may be prosecuted to the fullest extent of the law*

# Analysis Report

July 07, 2016

**PACIFICORP**
FIELD OFFICE
PO BOX 1005
HUNTINGTON UT 84528



| | | | |
|---|---|---|---|
| Client Sample ID: | 11W-17WSEALS | Sample ID By: | PacifiCorp |
| Date Sampled: | Jun 16, 2016 | Sample Taken By: | CAS/KSF |
| Date Received: | Jun 16, 2016 | Time Received: | 1135 |
| Product Description: | WATER | Time Sampled: | 1021 |
| | | Location: | 11W - 17W Seals |
| | | Mine: | 4 |
| | | Field - Conductivity: | 934 UMHOS/CM |
| | | Field - Temperature: | 13.0 DEG. C |
| Comments: | Dissolved Metals Filtered at Lab | FIELD - PH | 7.67 UNITS |

**SGS Minerals Sample ID: 782-1637554-001**

| TESTS | RESULT | UNIT | METHOD | REPORTING LIMIT | ANALYZED DATE | ANALYZED TIME | ANALYST |
|---|---|---|---|---|---|---|---|
| Hardness, mg equivalent CaCO3/L | 301 | mg/L | SM2340-B | 1 | 2016-06-30 | 10:00:00 | HF |
| Acidity | <5 | mg/L | D1067 | 5 | 2016-06-22 | 09:00:00 | HF |
| Anions | 9.44 | meq/L | SM1030E | 0 | 2016-06-30 | 10:00:00 | HF |
| Balance | -1.55 | % | SM1030E | -10 | 2016-06-30 | 10:00:00 | HF |
| Cations | 9.15 | meq/L | SM1030E | 0 | 2016-06-30 | 10:00:00 | HF |
| Alkalinity, mg CaCO3/L (pH 4.5) | 363 | mg/L | SM2320-B | 5 | 2016-06-21 | 09:00:00 | MS |
| Bicarbonate Alkalinity as CaCO3 | 363 | mg/L | SM2320-B | 5 | 2016-06-21 | 09:00:00 | MS |
| Carbonate Alkalinity as CaCO3 | <5 | mg/L | SM2320-B | 5 | 2016-06-21 | 09:00:00 | MS |
| Nitrogen, Ammonia | 1.1 | mg/L | SM4500-B-D | 0.1 | 2016-07-05 | 13:30:00 | MS |
| pH | 7.41 | | SM4500-H | 0.01 | 2016-06-17 | 12:31:00 | MS |
| pH Temperature | 14.00 | °C | SM4500-H | 0.01 | 2016-06-17 | 12:31:00 | MS |
| Conductivity | 934 | µmhos/cm | SM2510 | 0.1 | 2016-06-17 | 09:00:00 | MS |
| Total Dissolved Solids | 511 | mg/L | SM2540-C | 30 | 2016-06-20 | 15:10:00 | MS |
| Nitrate | <0.05 | mg/L | EPA 300.0 | 0.05 | 2016-06-23 | 22:58:00 | HF |
| Nitrite | <0.05 | mg/L | EPA 300.0 | 0.05 | 2016-06-23 | 22:58:00 | HF |
| Chloride, Cl | 10 | mg/L | EPA 300.0 | 1 | 2016-06-23 | 22:58:00 | HF |
| Sulfate, SO4 | 91 | mg/L | EPA 300.0 | 1 | 2016-06-23 | 22:58:00 | HF |
| Ortho-Phosphate-P | <0.05 | mg/L | EPA 300.0 | 0.05 | 2016-06-23 | 22:58:00 | HF |
| **METALS BY ICP** | | | | | | | |
| Aluminum, Al - Dissolved | <0.03 | mg/L | EPA 200.7 | 0.03 | 2016-06-23 | 12:00:00 | HF |
| Arsenic, As - Dissolved | <0.01 | mg/L | EPA 200.7 | 0.01 | 2016-06-23 | 12:00:00 | HF |

Lab Supervisor

Domenic Ibanez
Lab Supervisor

SGS North America Inc. | Minerals Services Division
2035 North Airport Road Huntington UT 84528 t (435) 653-2311 f (435)-653-2436 www.sgs.com/minerals

Member of the SGS Group (Société Générale de Surveillance)

*This document is issued by the Company under its General Conditions of Service accessible at http://www.sgs.com/terms_and_conditions.htm. Attention is drawn to the limitation of liability, indemnification and jurisdiction issues defined therein.*

*Any holder of this document is advised that information contained hereon reflects the Company's findings at the time of its intervention only and within the limits of Client's instructions, if any. The Company's sole responsibility is to its Client and this document does not exonerate parties to a transaction from exercising all their rights and obligations under the transaction documents. Any unauthorized alteration, forgery or falsification of the content or appearance of this document is unlawful and offenders may be prosecuted to the fullest extent of the law*

SGS

# Analysis Report

July 07, 2016

**PACIFICORP**
FIELD OFFICE
PO BOX 1005
HUNTINGTON UT 84528



| | | | |
|---|---|---|---|
| Client Sample ID: | 11W-17WSEALS | Sample ID By: | PacifiCorp |
| Date Sampled: | Jun 16, 2016 | Sample Taken By: | CAS/KSF |
| Date Received: | Jun 16, 2016 | Time Received: | 1135 |
| Product Description: | WATER | Time Sampled: | 1021 |
| | | Location: | 11W - 17W Seals |
| | | Mine: | 4 |
| | | Field - Conductivity: | 934 UMHOS/CM |
| | | Field - Temperature: | 13.0 DEG. C |
| Comments: | Dissolved Metals Filtered at Lab | FIELD - pH | 7.67 UNITS |

**SGS Minerals Sample ID: 782-1637554-001**

| TESTS | RESULT | UNIT | METHOD | REPORTING LIMIT | ANALYZED DATE | ANALYZED TIME | ANALYST |
|---|---|---|---|---|---|---|---|
| **METALS BY ICP (continued)** | | | | | | | |
| Cadmium, Cd - Dissolved | <0.001 | mg/L | EPA 200.7 | 0.001 | 2016-06-23 | 12:00:00 | HF |
| Calcium, Ca - Dissolved | 57.79 | mg/L | EPA 200.7 | 0.03 | 2016-06-23 | 12:00:00 | HF |
| Copper, Cu - Dissolved | <0.01 | mg/L | EPA 200.7 | 0.01 | 2016-06-23 | 12:00:00 | HF |
| Iron, Fe - Total | 1.21 | mg/L | EPA 200.7 | 0.05 | 2016-06-20 | 13:00:00 | HF |
| Iron, Fe - Dissolved | <0.03 | mg/L | EPA 200.7 | 0.03 | 2016-06-23 | 12:00:00 | HF |
| Lead, Pb - Dissolved | <0.01 | mg/L | EPA 200.7 | 0.01 | 2016-06-23 | 12:00:00 | HF |
| Magnesium, Mg - Dissolved | 37.94 | mg/L | EPA 200.7 | 0.01 | 2016-06-23 | 12:00:00 | HF |
| Manganese, Mn - Total | 0.020 | mg/L | EPA 200.7 | 0.002 | 2016-06-20 | 13:00:00 | HF |
| Manganese, Mn - Dissolved | 0.018 | mg/L | EPA 200.7 | 0.002 | 2016-06-23 | 12:00:00 | HF |
| Molybdenum, Mo - Dissolved | 0.012 | mg/L | EPA 200.7 | 0.005 | 2016-06-23 | 12:00:00 | HF |
| Potassium, K - Dissolved | 10.55 | mg/L | EPA 200.7 | 0.14 | 2016-06-23 | 12:00:00 | HF |
| Sodium, Na - Dissolved | 66.16 | mg/L | EPA 200.7 | 0.09 | 2016-06-23 | 12:00:00 | HF |
| Zinc, Zn - Dissolved | 0.049 | mg/L | EPA 200.7 | 0.004 | 2016-06-23 | 12:00:00 | HF |

Lab Supervisor

Domenic Ibanez
Lab Supervisor

SGS North America Inc. | Minerals Services Division
2035 North Airport Road Huntington UT 84528 t (435) 653-2311 f (435)-653-2436 www.sgs.com/minerals

Member of the SGS Group (Société Générale de Surveillance)

*This document is issued by the Company under its General Conditions of Service accessible at http://www.sgs.com/terms_and_conditions.htm. Attention is drawn to the limitation of liability, indemnification and jurisdiction issues defined therein.*

*Any holder of this document is advised that information contained hereon reflects the Company's findings at the time of its intervention only and within the limits of Client's instructions, if any. The Company's sole responsibility is to its Client and this document does not exonerate parties to a transaction from exercising all their rights and obligations under the transaction documents. Any unauthorized alteration, forgery or falsification of the content or appearance of this document is unlawful and offenders may be prosecuted to the fullest extent of the law*

CHEMTECH-FORD
LABORATORIES

7/6/2016

# Work Order: 16F0973
# Project: Deer Creek Mine 11th-17th West

**Pacificorp - Huntington Plant**
**Attn: Chuck Sembroski**
**P.O. Box 680**
**Huntington, UT 84528**

**Client Service Contact: 801.262.7299**

The analyses presented on this report were performed in accordance with the National Environmental Laboratory Accreditation Program (NELAP) unless noted in the comments, flags, or case narrative. If the report is to be used for regulatory compliance, it should be presented in its entirety, and not be altered.

Approved By:

Reed Hendricks, Senior Project Manager

CHEMTECH-FORD LABORATORIES

# Chemtech-Ford Laboratories

Serving the Intermountain West Since 1953

9632 South 500 West
Sandy, UT 84070
O:(801) 262-7299 F: (866) 792-0093
www.ChemtechFord.com

## Certificate of Analysis

**Pacificorp - Huntington Plant**
**Chuck Sembroski**
**P.O. Box 680**
**Huntington, UT 84528**

PO#: **3000116067**
Receipt: **6/17/16 14:52 @ 10.60 °C**
Date Reported: 7/6/2016
Project Name: **Deer Creek Mine 11th-17th West**

Sample ID: **Deer Creek Mine 11th-17th West**
Matrix: **Water**
Date Sampled: **6/17/16 10:21**
Sampled By: **Chuck Sembroski**
Lab ID: **16F0973-01**

| Parameter | Result | Units | Minimum Reporting Limit | Method | Preparation Date/Time | Analysis Date/Time | Flag(s) |
|---|---|---|---|---|---|---|---|
| **Pesticides** | | | | | | | |
| 4,4'-DDD | ND | ug/L | 0.2 | EPA 608 | 6/21/16 | 6/28/16 | |
| 4,4'-DDE | ND | ug/L | 0.1 | EPA 608 | 6/21/16 | 6/28/16 | |
| 4,4'-DDT | ND | ug/L | 0.2 | EPA 608 | 6/21/16 | 6/28/16 | |
| alpha-Chlordane | ND | ug/L | 0.1 | EPA 608 | 6/21/16 | 6/28/16 | |
| Aldrin | ND | ug/L | 0.2 | EPA 608 | 6/21/16 | 6/28/16 | |
| alpha-BHC | ND | ug/L | 0.05 | EPA 608 | 6/21/16 | 6/28/16 | |
| beta-BHC | ND | ug/L | 0.1 | EPA 608 | 6/21/16 | 6/28/16 | |
| delta-BHC | ND | ug/L | 0.1 | EPA 608 | 6/21/16 | 6/28/16 | |
| Dieldrin | ND | ug/L | 0.1 | EPA 608 | 6/21/16 | 6/28/16 | |
| Endosulfan I | ND | ug/L | 0.1 | EPA 608 | 6/21/16 | 6/28/16 | |
| Endosulfan II | ND | ug/L | 0.2 | EPA 608 | 6/21/16 | 6/28/16 | |
| Endosulfan sulfate | ND | ug/L | 0.2 | EPA 608 | 6/21/16 | 6/28/16 | |
| Endrin | ND | ug/L | 0.1 | EPA 608 | 6/21/16 | 6/28/16 | |
| Endrin aldehyde | ND | ug/L | 0.2 | EPA 608 | 6/21/16 | 6/28/16 | |
| gamma-Chlordane | ND | ug/L | 0.1 | EPA 608 | 6/21/16 | 6/28/16 | |
| Heptachlor | ND | ug/L | 0.1 | EPA 608 | 6/21/16 | 6/28/16 | |
| Heptachlor epoxide | ND | ug/L | 0.1 | EPA 608 | 6/21/16 | 6/28/16 | |
| Lindane | ND | ug/L | 0.05 | EPA 608 | 6/21/16 | 6/28/16 | |
| PCB-1016 | ND | ug/L | 2.0 | EPA 608 | 6/21/16 | 6/28/16 | |
| PCB-1221 | ND | ug/L | 2.0 | EPA 608 | 6/21/16 | 6/28/16 | |
| PCB-1232 | ND | ug/L | 2.0 | EPA 608 | 6/21/16 | 6/28/16 | |
| PCB-1242 | ND | ug/L | 2.0 | EPA 608 | 6/21/16 | 6/28/16 | |
| PCB-1248 | ND | ug/L | 2.0 | EPA 608 | 6/21/16 | 6/28/16 | |
| PCB-1254 | ND | ug/L | 2.0 | EPA 608 | 6/21/16 | 6/28/16 | |
| PCB-1260 | ND | ug/L | 2.0 | EPA 608 | 6/21/16 | 6/28/16 | |
| Toxaphene | ND | ug/L | 2.0 | EPA 608 | 6/21/16 | 6/28/16 | |
| **Semi-Volatile Compounds** | | | | | | | |
| 1,2,4-Trichlorobenzene | ND | ug/L | 5 | EPA 625 | 6/21/16 | 6/27/16 | |
| 1,2-Dichlorobenzene | ND | ug/L | 5 | EPA 625 | 6/21/16 | 6/27/16 | |
| 1,3-Dichlorobenzene | ND | ug/L | 5 | EPA 625 | 6/21/16 | 6/27/16 | |
| 1,4-Dichlorobenzene | ND | ug/L | 5 | EPA 625 | 6/21/16 | 6/27/16 | |
| 2,4,6-Trichlorophenol | ND | ug/L | 5 | EPA 625 | 6/21/16 | 6/27/16 | |
| 2,4-Dichlorophenol | ND | ug/L | 5 | EPA 625 | 6/21/16 | 6/27/16 | |
| 2,4-Dimethylphenol | ND | ug/L | 5 | EPA 625 | 6/21/16 | 6/27/16 | |
| 2,4-Dinitrophenol | ND | ug/L | 10 | EPA 625 | 6/21/16 | 6/27/16 | |
| 2,4-Dinitrotoluene | ND | ug/L | 5 | EPA 625 | 6/21/16 | 6/27/16 | |
| 2,6-Dinitrotoluene | ND | ug/L | 5 | EPA 625 | 6/21/16 | 6/27/16 | |
| 2-Chloronaphthalene | ND | ug/L | 5 | EPA 625 | 6/21/16 | 6/27/16 | |
| 2-Chlorophenol | ND | ug/L | 5 | EPA 625 | 6/21/16 | 6/27/16 | |
| 2-Nitrophenol | ND | ug/L | 10 | EPA 625 | 6/21/16 | 6/27/16 | |
| 3,3'-Dichlorobenzidine | ND | ug/L | 10 | EPA 625 | 6/21/16 | 6/27/16 | |
| 4,6-Dinitro-2-methylphenol | ND | ug/L | 10 | EPA 625 | 6/21/16 | 6/27/16 | |
| 4-Bromophenyl phenyl ether | ND | ug/L | 5 | EPA 625 | 6/21/16 | 6/27/16 | |

CHEMTECH-FORD LABORATORIES

# Chemtech-Ford Laboratories

Serving the Intermountain West Since 1953

9632 South 500 West
Sandy, UT 84070
O:(801) 262-7299 F: (866) 792-0093
www.ChemtechFord.com

## Certificate of Analysis

**Pacificorp - Huntington Plant**
**Chuck Sembroski**
**P.O. Box 680**
**Huntington, UT 84528**

PO#: **3000116067**
Receipt: **6/17/16 14:52 @ 10.60 °C**
Date Reported: 7/6/2016
Project Name: **Deer Creek Mine 11th-17th West**

Sample ID: **Deer Creek Mine 11th-17th West (cont.)**
Matrix: **Water**
Date Sampled: **6/17/16 10:21**
Sampled By: **Chuck Sembroski**
Lab ID: **16F0973-01**

| Parameter | Result | Units | Minimum Reporting Limit | Method | Preparation Date/Time | Analysis Date/Time | Flag(s) |
|---|---|---|---|---|---|---|---|
| **Semi-Volatile Compounds (cont.)** | | | | | | | |
| 4-Chloro-3-methylphenol | ND | ug/L | 5 | EPA 625 | 6/21/16 | 6/27/16 | |
| 4-Chlorophenyl Phenyl Ether | ND | ug/L | 5 | EPA 625 | 6/21/16 | 6/27/16 | |
| 4-Nitrophenol | ND | ug/L | 10 | EPA 625 | 6/21/16 | 6/27/16 | |
| Acenaphthene | ND | ug/L | 5 | EPA 625 | 6/21/16 | 6/27/16 | |
| Acenaphthylene | ND | ug/L | 5 | EPA 625 | 6/21/16 | 6/27/16 | |
| Anthracene | ND | ug/L | 5 | EPA 625 | 6/21/16 | 6/27/16 | |
| Azobenzene | ND | ug/L | 5 | EPA 625 | 6/21/16 | 6/27/16 | |
| Benzidine | ND | ug/L | 10 | EPA 625 | 6/21/16 | 6/27/16 | |
| Benzo (a) anthracene | ND | ug/L | 5 | EPA 625 | 6/21/16 | 6/27/16 | |
| Benzo (a) pyrene | ND | ug/L | 5 | EPA 625 | 6/21/16 | 6/27/16 | |
| Benzo (b) fluoranthene | ND | ug/L | 5 | EPA 625 | 6/21/16 | 6/27/16 | |
| Benzo (g,h,i) perylene | ND | ug/L | 5 | EPA 625 | 6/21/16 | 6/27/16 | |
| Benzo (k) fluoranthene | ND | ug/L | 5 | EPA 625 | 6/21/16 | 6/27/16 | |
| Bis (2-chloroethoxy) Methane | ND | ug/L | 5 | EPA 625 | 6/21/16 | 6/27/16 | |
| Bis (2-chloroethyl) Ether | ND | ug/L | 5 | EPA 625 | 6/21/16 | 6/27/16 | |
| Bis (2-chloroisopropyl) Ether | ND | ug/L | 5 | EPA 625 | 6/21/16 | 6/27/16 | |
| Bis (2-ethylhexyl) Phthalate | ND | ug/L | 10 | EPA 625 | 6/21/16 | 6/27/16 | |
| Butylbenzylphthalate | ND | ug/L | 5 | EPA 625 | 6/21/16 | 6/27/16 | |
| Chrysene | ND | ug/L | 5 | EPA 625 | 6/21/16 | 6/27/16 | |
| Dibenzo (a,h) anthracene | ND | ug/L | 5 | EPA 625 | 6/21/16 | 6/27/16 | |
| Diethylphthalate | ND | ug/L | 5 | EPA 625 | 6/21/16 | 6/27/16 | |
| Dimethyl phthalate | ND | ug/L | 5 | EPA 625 | 6/21/16 | 6/27/16 | |
| Di-n-butylphthalate | ND | ug/L | 5 | EPA 625 | 6/21/16 | 6/27/16 | |
| Di-n-Octylphthalate | ND | ug/L | 5 | EPA 625 | 6/21/16 | 6/27/16 | |
| Fluoranthene | ND | ug/L | 5 | EPA 625 | 6/21/16 | 6/27/16 | |
| Fluorene | ND | ug/L | 5 | EPA 625 | 6/21/16 | 6/27/16 | |
| Hexachlorobenzene | ND | ug/L | 5 | EPA 625 | 6/21/16 | 6/27/16 | |
| Hexachlorobutadiene | ND | ug/L | 5 | EPA 625 | 6/21/16 | 6/27/16 | |
| Hexachlorocyclopentadiene | ND | ug/L | 10 | EPA 625 | 6/21/16 | 6/27/16 | |
| Hexachloroethane | ND | ug/L | 5 | EPA 625 | 6/21/16 | 6/27/16 | |
| Indeno (1,2,3-cd) pyrene | ND | ug/L | 5 | EPA 625 | 6/21/16 | 6/27/16 | |
| Isophorone | ND | ug/L | 5 | EPA 625 | 6/21/16 | 6/27/16 | |
| Naphthalene | ND | ug/L | 5 | EPA 625 | 6/21/16 | 6/27/16 | |
| Nitrobenzene | ND | ug/L | 5 | EPA 625 | 6/21/16 | 6/27/16 | |
| N-Nitrosodimethylamine | ND | ug/L | 10 | EPA 625 | 6/21/16 | 6/27/16 | |
| N-Nitrosodi-n-propylamine | ND | ug/L | 5 | EPA 625 | 6/21/16 | 6/27/16 | |
| N-Nitrosodiphenylamine | ND | ug/L | 5 | EPA 625 | 6/21/16 | 6/27/16 | |
| Pentachlorophenol | ND | ug/L | 5 | EPA 625 | 6/21/16 | 6/27/16 | |
| Phenanthrene | ND | ug/L | 5 | EPA 625 | 6/21/16 | 6/27/16 | |
| Phenol | ND | ug/L | 5 | EPA 625 | 6/21/16 | 6/27/16 | |
| Pyrene | ND | ug/L | 5 | EPA 625 | 6/21/16 | 6/27/16 | |
| **Volatile Organic Compounds** | | | | | | | |
| 1,1,1,2-Tetrachloroethane | ND | ug/L | 5 | EPA 624 | 6/20/16 | 6/20/16 | |

CHEMTECH-FORD LABORATORIES

# Chemtech-Ford Laboratories

Serving the Intermountain West Since 1953

9632 South 500 West
Sandy, UT 84070
O:(801) 262-7299 F: (866) 792-0093
www.ChemtechFord.com

## Certificate of Analysis

**Pacificorp - Huntington Plant**
**Chuck Sembroski**
**P.O. Box 680**
**Huntington, UT 84528**

PO#: **3000116067**
Receipt: **6/17/16 14:52 @ 10.60 °C**
Date Reported: 7/6/2016
Project Name: **Deer Creek Mine 11th-17th West**

Sample ID: **Deer Creek Mine 11th-17th West (cont.)**
Matrix: **Water**
Date Sampled: **6/17/16 10:21**
Sampled By: **Chuck Sembroski**
Lab ID: **16F0973-01**

| Parameter | Result | Units | Minimum Reporting Limit | Method | Preparation Date/Time | Analysis Date/Time | Flag(s) |
|---|---|---|---|---|---|---|---|
| **Volatile Organic Compounds (cont.)** | | | | | | | |
| 1,1,1-Trichloroethane | ND | ug/L | 5 | EPA 624 | 6/20/16 | 6/20/16 | |
| 1,1,2-Trichloroethane | ND | ug/L | 5 | EPA 624 | 6/20/16 | 6/20/16 | |
| 1,1-Dichloroethane | ND | ug/L | 5 | EPA 624 | 6/20/16 | 6/20/16 | |
| 1,1-Dichloroethene | ND | ug/L | 5 | EPA 624 | 6/20/16 | 6/20/16 | |
| 1,2-Dichlorobenzene | ND | ug/L | 5 | EPA 624 | 6/20/16 | 6/20/16 | |
| 1,2-Dichloroethane | ND | ug/L | 5 | EPA 624 | 6/20/16 | 6/20/16 | |
| 1,2-Dichloropropane | ND | ug/L | 5 | EPA 624 | 6/20/16 | 6/20/16 | |
| 1,3-Dichlorobenzene | ND | ug/L | 5 | EPA 624 | 6/20/16 | 6/20/16 | |
| 1,4-Dichlorobenzene | ND | ug/L | 5 | EPA 624 | 6/20/16 | 6/20/16 | |
| 2-Chloroethyl vinyl ether | ND | ug/L | 5 | EPA 624 | 6/20/16 | 6/20/16 | |
| Acrolein | ND | ug/L | 100 | EPA 624 | 6/20/16 | 6/20/16 | |
| Acrylonitrile | ND | ug/L | 50 | EPA 624 | 6/20/16 | 6/20/16 | |
| Benzene | ND | ug/L | 5 | EPA 624 | 6/20/16 | 6/20/16 | |
| Bromodichloromethane | ND | ug/L | 5 | EPA 624 | 6/20/16 | 6/20/16 | |
| Bromoform | ND | ug/L | 5 | EPA 624 | 6/20/16 | 6/20/16 | |
| Bromomethane | ND | ug/L | 5 | EPA 624 | 6/20/16 | 6/20/16 | |
| Carbon Tetrachloride | ND | ug/L | 5 | EPA 624 | 6/20/16 | 6/20/16 | |
| Chlorobenzene | ND | ug/L | 5 | EPA 624 | 6/20/16 | 6/20/16 | |
| Chloroethane | ND | ug/L | 5 | EPA 624 | 6/20/16 | 6/20/16 | |
| Chloroform | ND | ug/L | 5 | EPA 624 | 6/20/16 | 6/20/16 | |
| Chloromethane | ND | ug/L | 5 | EPA 624 | 6/20/16 | 6/20/16 | |
| cis-1,3-Dichloropropene | ND | ug/L | 5 | EPA 624 | 6/20/16 | 6/20/16 | |
| Dibromochloromethane | ND | ug/L | 5 | EPA 624 | 6/20/16 | 6/20/16 | |
| Ethylbenzene | ND | ug/L | 5 | EPA 624 | 6/20/16 | 6/20/16 | |
| Methylene Chloride | ND | ug/L | 5 | EPA 624 | 6/20/16 | 6/20/16 | |
| Tetrachloroethene | ND | ug/L | 5 | EPA 624 | 6/20/16 | 6/20/16 | |
| Toluene | ND | ug/L | 5 | EPA 624 | 6/20/16 | 6/20/16 | |
| trans-1,2-Dichloroethene | ND | ug/L | 5 | EPA 624 | 6/20/16 | 6/20/16 | |
| trans-1,3-Dichloropropene | ND | ug/L | 5 | EPA 624 | 6/20/16 | 6/20/16 | |
| Trichloroethene | ND | ug/L | 5 | EPA 624 | 6/20/16 | 6/20/16 | |
| Vinyl Chloride | ND | ug/L | 5 | EPA 624 | 6/20/16 | 6/20/16 | |

## Certificate of Analysis

**Pacificorp - Huntington Plant**
**Chuck Sembroski**
**P.O. Box 680**
**Huntington, UT 84528**

PO#: **3000116067**
Receipt: **6/17/16 14:52 @ 10.60 °C**
Date Reported: 7/6/2016
Project Name: **Deer Creek Mine 11th-17th West**

# Report Footnotes

**Abbreviations**

ND = Not detected at the corresponding Minimum Reporting Limit (MRL).
1 mg/L = one milligram per liter or 1 mg/kg = one milligram per kilogram = 1 part per million.
1 ug/L = one microgram per liter or 1 ug/kg = one microgram per kilogram = 1 part per billion.
1 ng/L = one nanogram per liter or 1 ng/kg = one nanogram per kilogram = 1 part per trillion.

## CHEMTECH - FORD ANALYTICAL LABORATORY

## CHAIN OF CUSTODY

COMPANY: PacifiCorp - Interwest Mining Company
ADDRESS: P.O. Box 310 15 North Main
CITY/STATE/ZIP: Huntington, UT 84528
PHONE #: 435-687-4720 FAX: 435-687-2695
CONTACT: Chucks Semborski PROJECT: Deer Creek Mine 11TH-17TH West
EMAIL: Chuck.Semborski@Pacificorp.com

BILLING ADDRESS: 15 North Main Street
BILLING CITY/STATE/ZIP: Huntington UT 84528
PURCHASE ORDER #: 3000116067

CHEMTECH-FORD LABORATORIES

TURNAROUND REQUIRED:* July 1, 2016
* Expedited turnaround subject to additional charge

| Lab Use Only | CLIENT SAMPLE INFORMATION | | | | | TESTS REQUESTED | Bacteria | | | |
|---|---|---|---|---|---|---|---|---|---|---|
| | LOCATION / IDENTIFICATION | DATE | TIME | MATRIX | Field: Residual Chlorine | | Total Coliform + E. coli (Present/Absent) | Total Coliform + E. coli (Enumerated) | HPC (Plate Count) | E. Coli Only |
| E0973 -01 | 1. Deer Creek Mine 11TH-17TH West | 6/17/16 | 10:21 | | | See Attached Sheet | | | | |
| | 2. | | | | | | | | | |
| | 3. | | | | | | | | | |
| | 4. | | | | | | | | | |
| | 5. | | | | | | | | | |
| | 6. | | | | | | | | | |
| | 7. | | | | | | | | | |
| | 8. | | | | | | | | | |
| | 9. | | | | | | | | | |
| | 10. | | | | | | | | | |

Sampled by: [print] Chuck Semborski
Sampled by: [signature] [signature]

ON ICE NOT ON ICE Temp (C°): 10.6

Samples received outside the EPA recommended temperature range of 0-6 C° may be rejected.

Special Instructions:

| Relinquished by: [signature] | Date/Time | Received by: [signature] | Date/Time |
|---|---|---|---|
| [signature] | 6/17/16 @ 11:25 | [signature] | 6/17/16 11:25am |
| [signature] | 6/17/16 @ 14:52 | [signature] | 6-17-16 14:52 |
| | | | |

CHEMTECH-FORD
9632 South 500 West
Sandy, UT 84070
801.262.7299 PHONE
866.792.0093 FAX
www.chemtechford.com

Payment Terms are net 30 days OAC. 1.5% interest charge per month (18% per annum). Client agrees to pay collection costs and attorney's fees.

United States Environmental Protection Agency

# Priority Pollutant List

**Priority Pollutants** are a set of chemical pollutants we regulate, and for which we have developed analytical test methods. The current list of 126 Priority Pollutants, shown below, can also be found at 40 CFR Part 423, Appendix A.

These are not the only pollutants regulated in Clean Water Act programs. The list is an important starting point for EPA to consider, for example, in developing national discharge standards (such as Effluent Guidelines) or in national permitting programs (such as NPDES).

1. Acenaphthene
2. Acrolein
3. Acrylonitrile
4. Benzene
5. Benzidine
6. Carbon tetrachloride
7. Chlorobenzene
8. 1,2,4-trichlorobenzene
9. Hexachlorobenzene
10. 1,2-dichloroethane
11. 1,1,1-trichloreothane
12. Hexachloroethane
13. 1,1-dichloroethane
14. 1,1,2-trichloroethane
15. 1,1,2,2-tetrachloroethane
16. Chloroethane
17. (Removed)
18. Bis(2-chloroethyl) ether
19. 2-chloroethyl vinyl ethers
20. 2-chloronaphthalene
21. 2,4,6-trichlorophenol
22. Parachlorometa cresol
23. Chloroform
24. 2-chlorophenol
25. 1,2-dichlorobenzene
26. 1,3-dichlorobenzene
27. 1,4-dichlorobenzene
28. 3,3-dichlorobenzidine
29. 1,1-dichloroethylene
30. 1,2-trans-dichloroethylene
31. 2,4-dichlorophenol
32. 1,2-dichloropropane
33. 1,3-dichloropropylene
34. 2,4-dimethylphenol
35. 2,4-dinitrotoluene
36. 2,6-dinitrotoluene
37. 1,2-diphenylhydrazine
38. Ethylbenzene
39. Fluoranthene
40. 4-chlorophenyl phenyl ether
41. 4-bromophenyl phenyl ether
42. Bis(2-chloroisopropyl) ether
43. Bis(2-chloroethoxy) methane
44. Methylene chloride
45. Methyl chloride
46. Methyl bromide
47. Bromoform
48. Dichlorobromomethane
49. (Removed)
50. (Removed)
51. Chlorodibromomethane
52. Hexachlorobutadiene
53. Hexachlorocyclopentadiene
54. Isophorone
55. Naphthalene
56. Nitrobenzene
57. 2-nitrophenol
58. 4-nitrophenol
59. 2,4-dinitrophenol
60. 4,6-dinitro-o-cresol
61. N-nitrosodimethylamine
62. N-nitrosodiphenylamine
63. N-nitrosodi-n-propylamine
64. Pentachlorophenol
65. Phenol
66. Bis(2-ethylhexyl) phthalate
67. Butyl benzyl phthalate
68. Di-N-Butyl Phthalate

69. Di-n-octyl phthalate
70. Diethyl Phthalate
71. Dimethyl phthalate
72. Benzo(a) anthracene
73. Benzo(a) pyrene
74. Benzo(b) fluoranthene
75. Benzo(k) fluoranthene
76. Chrysene
77. Acenaphthylene
78. Anthracene
79. Benzo(ghi) perylene
80. Fluorene
81. Phenanthrene
82. Dibenzo(,h) anthracene
83. Indeno (1,2,3-cd) pyrene
84. Pyrene
85. Tetrachloroethylene
86. Toluene
87. Trichloroethylene
88. Vinyl chloride
89. Aldrin
90. Dieldrin
91. Chlordane
92. 4,4-DDT
93. 4,4-DDE
94. 4,4-DDD
95. Alpha-endosulfan
96. Beta-endosulfan
97. Endosulfan sulfate
98. Endrin
99. Endrin aldehyde
100. Heptachlor
101. Heptachlor epoxide
102. Alpha-BHC
103. Beta-BHC
104. Gamma-BHC
105. Delta-BHC
106. ~~PCB-1242 (Arochlor 1242)~~
107. ~~PCB-1254 (Arochlor 1254)~~
108. ~~PCB-1221 (Arochlor 1221)~~
109. ~~PCB-1232 (Arochlor 1232)~~
110. ~~PCB-1248 (Arochlor 1248)~~
111. ~~PCB-1260 (Arochlor 1260)~~
112. ~~PCB-1016 (Arochlor 1016)~~
113. Toxaphene
114. ~~Antimony~~
115. Arsenic
116. ~~Asbestos~~
117. ~~Beryllium~~
118. ~~Cadmium~~
119. ~~Chromium~~
120. ~~Copper~~
121. ~~Cyanide, Total~~
122. ~~Lead~~
123. ~~Mercury~~
124. ~~Nickel~~
125. ~~Selenium~~
126. ~~Silver~~
127. ~~Thallium~~
128. ~~Zinc~~
129. ~~2,3,7,8-TCDD~~

**Additional Information**

- Toxic and Priority Pollutants Under the Clean Water Act

# CHEMTECH FORD LABORATORIES

Sample Receipt

CHEMTECH-FORD LABORATORIES

**Work Order #** F0973

**Delivery Method:**

- ☐ UPS
- ☐ USPS
- ☐ FedEx
- ☐ Chemtech Courier
- ☒ Walk-in
- ☐ Customer Courier

**Receiving Temperature** 10.6 °C

| Sample # | Container | Chemtech Lot # or Preservative | Number of Subsamples | Preserved by Client/Third Party | Preserved in Receiving Laboratory | Filtered in Field by Client | Misc. Volume (oz/mL) | Comments |
|---|---|---|---|---|---|---|---|---|
| -01 | M | | | | | | | Lot # illegible |
| | Y (1-2) | 644 | | | | | | |
| | X (1-4) | | | | | | | |
| | X (1-4) | | | | | | | |
| | | | | | | | | |
| | | | | | | | | |
| | | | | | | | | |
| | | | | | | | | |
| | | | | | | | | |
| | | | | | | | | |
| | | | | | | | | |
| | | | | | | | | |
| | | | | | | | | |
| | | | | | | | | |
| | | | | | | | | |
| | | | | | | | | |
| | | | | | | | | |
| | | | | | | | | |
| | | | | | | | | |
| | | | | | | | | |
| | | | | | | | | |
| | | | | | | | | |
| | | | | | | | | |
| | | | | | | | | |
| | | | | | | | | |
| | | | | | | | | |

**Sample Condition** (check if yes)

- ☐ Custody Seals
- ☑ Containers Intact
- ☑ COC/Labels Agree
- ☑ Preservation Confirmed
- ☑ Received on Ice
- ☑ Correct Containers(s)
- ☑ Sufficent Sample Volume
- ☐ Headspace Present (VOC)
- ☐ Temperature Blank
- ☑ Received within Holding Time

**Plastic Containers**

A- Plastic Unpreserved
B- Miscellaneous Plastic
C- Cyanide Qt (NaOH)
E- Coliform/Ecoli/HPC
F- Sulfide Qt (Zn Acetate)
L- Mercury 1631
M- Metals Pint (HNO3)
N- Nutrient Pint (H2SO4)
R- Radiological (HNO3)
S- Sludge Cups/Tubs
Q- Plastic Bag

**Glass Containers**

D- 625 (Na2S2O3)
G- Glass Unpreserved
H- HAAs (NH4Cl)
J- 508/515/525 (Na2SO3)
K- 515.3 Herbicides
O- Oil & Grease (HCl)
P- Phenols (H2SO4)
T- TOC/TOX (H3PO4)
U- 531 (MCAA, Na2S2O3)
V- 524/THMs (Ascorbic Acid)
W- 8260 VOC (1:1 HCl)
X- Vial Unpreserved
Y- 624/504 (Na2S2O3)
Z- Miscellaneous Glass

# Analysis Report

August 16, 2016

**PACIFICORP**
FIELD OFFICE
PO BOX 1005
HUNTINGTON UT 84528



| | | | |
|---|---|---|---|
| Client Sample ID: | 11W-17W SEALS | Sample ID By: | PacifiCorp |
| Date Sampled: | Jul 12, 2016 | Sample Taken By: | CAS KSF |
| Date Received: | Jul 12, 2016 | Time Received: | 1325 |
| Product Description: | WATER | Time Sampled: | 1021 |
| | | Location: | 11W-17W SEALS |
| | | Mine: | 4 |
| | | Field - pH: | 7.66 pH units |
| | | Field - Conductivity: | 929 UMHOS/CM |
| | | Field - Temperature: | 13.4 DEG. C |

Comments: Dissolved Metals Filtered at Lab: Total Selenium 200.8 Analyzed at A.W.A.L.

**SGS Minerals Sample ID: 782-1638403-001**

| TESTS | RESULT | UNIT | METHOD | REPORTING LIMIT | ANALYZED DATE | ANALYZED TIME | ANALYST |
|---|---|---|---|---|---|---|---|
| Hardness, mg equivalent CaCO3/L | 304 | mg/L | SM2340-B | 1 | 2016-07-26 | 12:00:00 | HF |
| Acidity | <5 | mg/L | D1067 | 5 | 2016-06-30 | 15:00:00 | MS |
| Anions | 9.48 | meq/L | SM1030E | 0 | 2016-07-26 | 12:00:00 | HF |
| Balance | -2.24 | % | SM1030E | -10 | 2016-07-26 | 12:00:00 | HF |
| Cations | 9.07 | meq/L | SM1030E | 0 | 2016-07-26 | 12:00:00 | HF |
| Alkalinity, mg CaCO3/L (pH 4.5) | 362 | mg/L | SM2320-B | 5 | 2016-07-19 | 10:00:05 | MS |
| Bicarbonate Alkalinity as CaCO3 | 362 | mg/L | SM2320-B | 5 | 2016-07-19 | 10:00:05 | MS |
| Carbonate Alkalinity as CaCO3 | <5 | mg/L | SM2320-B | 5 | 2016-07-19 | 10:00:05 | MS |
| Nitrogen, Ammonia | 3.9 | mg/L | SM4500-B-D | 0.1 | 2016-07-25 | 07:30:00 | MS |
| pH | 7.39 | | SM4500-H | 0.01 | 2016-07-03 | 09:00:00 | MS |
| pH Temperature | 20.00 | °C | SM4500-H | 0.01 | 2016-07-03 | 09:00:00 | MS |
| Conductivity | 842 | µmhos/cm | SM2510 | 0.1 | 2016-07-21 | 11:37:32 | MS |
| Total Dissolved Solids | 489 | mg/L | SM2540-C | 30 | 2016-07-14 | 14:30:00 | MS |
| Nitrate | <0.05 | mg/L | EPA 300.0 | 0.05 | 2016-07-13 | 12:00:00 | HF |
| Nitrite | <0.05 | mg/L | EPA 300.0 | 0.05 | 2016-07-13 | 12:00:00 | HF |
| Chloride, Ci | 11 | mg/L | EPA 300.0 | 1 | 2016-07-13 | 12:00:00 | HF |
| Sulfate, SO4 | 93 | mg/L | EPA 300.0 | 1 | 2016-07-13 | 12:00:00 | HF |
| Ortho-Phosphate-P | <0.05 | mg/L | EPA 300.0 | 0.05 | 2016-07-13 | 12:00:00 | HF |
| Mercury, Hg - Total | <0.2 | µg/L | EPA 245.1 | 0.2 | 2016-08-04 | 07:00:00 | HF |

**METALS BY ICP**

Lab Supervisor

Domenic Ibanez
Lab Supervisor

SGS North America Inc. | Minerals Services Division
2035 North Airport Road Huntington UT 84528 t (435) 653-2311 f (435)-653-2436 www.sgs.com/minerals

Member of the SGS Group (Société Générale de Surveillance)

*This document is issued by the Company under its General Conditions of Service accessible at http://www.sgs.com/terms_and_conditions.htm. Attention is drawn to the limitation of liability, indemnification and jurisdiction issues defined therein.*

*Any holder of this document is advised that information contained hereon reflects the Company's findings at the time of its intervention only and within the limits of Client's instructions, if any. The Company's sole responsibility is to its Client and this document does not exonerate parties to a transaction from exercising all their rights and obligations under the transaction documents. Any unauthorized alteration, forgery or falsification of the content or appearance of this document is unlawful and offenders may be prosecuted to the fullest extent of the law*

SGS

# Analysis Report

August 16, 2016

**PACIFICORP**
FIELD OFFICE
PO BOX 1005
HUNTINGTON UT 84528



| | | | |
|---|---|---|---|
| Client Sample ID: | 11W-17W SEALS | Sample ID By: | PacifiCorp |
| Date Sampled: | Jul 12, 2016 | Sample Taken By: | CAS KSF |
| Date Received: | Jul 12, 2016 | Time Received: | 1325 |
| Product Description: | WATER | Time Sampled: | 1021 |
| | | Location: | 11W-17W SEALS |
| | | Mine: | 4 |
| | | Field - pH: | 7.66 pH units |
| | | Field - Conductivity: | 929 UMHOS/CM |
| | | Field - Temperature: | 13.4 DEG. C |

Comments: Dissolved Metals Filtered at Lab: Total Selenium 200.8 Analyzed at A.W.A.L.

**SGS Minerals Sample ID: 782-1638403-001**

| TESTS | RESULT | UNIT | METHOD | REPORTING LIMIT | ANALYZED DATE | ANALYZED TIME | ANALYST |
|---|---|---|---|---|---|---|---|
| **METALS BY ICP (continued)** | | | | | | | |
| Aluminum, Al - Dissolved | 0.04 | mg/L | EPA 200.7 | 0.03 | 2016-07-19 | 10:00:00 | HF |
| Arsenic, As - Dissolved | <0.01 | mg/L | EPA 200.7 | 0.01 | 2016-07-19 | 10:00:00 | HF |
| Arsenic, As - Total | <0.01 | mg/L | EPA 200.7 | 0.01 | 2016-08-03 | 10:23:19 | HF |
| Boron, B - Total | 0.22 | mg/L | EPA 200.7 | 0.01 | 2016-08-03 | 10:23:19 | HF |
| Cadmium, Cd - Dissolved | <0.001 | mg/L | EPA 200.7 | 0.001 | 2016-07-19 | 10:00:00 | HF |
| Cadmium, Cd - Total | <0.001 | mg/L | EPA 200.7 | 0.001 | 2016-08-03 | 10:23:19 | HF |
| Calcium, Ca - Dissolved | 57.96 | mg/L | EPA 200.7 | 0.03 | 2016-07-19 | 10:00:00 | HF |
| Chromium, Cr - Total | 0.005 | mg/L | EPA 200.7 | 0.001 | 2016-08-03 | 10:23:19 | HF |
| Copper, Cu - Dissolved | <0.01 | mg/L | EPA 200.7 | 0.01 | 2016-07-19 | 10:00:00 | HF |
| Copper, Cu - Total | <0.01 | mg/L | EPA 200.7 | 0.01 | 2016-07-14 | 13:00:00 | HF |
| Iron, Fe - Total | 1.35 | mg/L | EPA 200.7 | 0.05 | 2016-07-14 | 13:00:00 | HF |
| Iron, Fe - Dissolved | <0.03 | mg/L | EPA 200.7 | 0.03 | 2016-07-19 | 10:00:00 | HF |
| Lead, Pb - Dissolved | <0.01 | mg/L | EPA 200.7 | 0.01 | 2016-07-19 | 10:00:00 | HF |
| Lead, Pb - Total | <0.01 | mg/L | EPA 200.7 | 0.01 | 2016-07-14 | 13:00:00 | HF |
| Magnesium, Mg - Dissolved | 38.76 | mg/L | EPA 200.7 | 0.01 | 2016-07-19 | 10:00:00 | HF |
| Manganese, Mn - Total | 0.020 | mg/L | EPA 200.7 | 0.002 | 2016-07-14 | 13:00:00 | HF |
| Manganese, Mn - Dissolved | 0.018 | mg/L | EPA 200.7 | 0.002 | 2016-07-19 | 10:00:00 | HF |
| Molybdenum, Mo - Dissolved | 0.011 | mg/L | EPA 200.7 | 0.005 | 2016-07-19 | 10:00:00 | HF |
| Nickel, Ni - Total | 0.037 | mg/L | EPA 200.7 | 0.001 | 2016-07-14 | 13:00:00 | HF |
| Potassium, K - Dissolved | 10.40 | mg/L | EPA 200.7 | 0.14 | 2016-07-19 | 10:00:00 | HF |

Lab Supervisor

Domenic Ibanez
Lab Supervisor

SGS North America Inc. | Minerals Services Division
2035 North Airport Road Huntington UT 84528 t (435) 653-2311 f (435)-653-2436 www.sgs.com/minerals

Member of the SGS Group (Société Générale de Surveillance)

*This document is issued by the Company under its General Conditions of Service accessible at http://www.sgs.com/terms_and_conditions.htm. Attention is drawn to the limitation of liability, indemnification and jurisdiction issues defined therein.*

*Any holder of this document is advised that information contained hereon reflects the Company's findings at the time of its intervention only and within the limits of Client's instructions, if any. The Company's sole responsibility is to its Client and this document does not exonerate parties to a transaction from exercising all their rights and obligations under the transaction documents. Any unauthorized alteration, forgery or falsification of the content or appearance of this document is unlawful and offenders may be prosecuted to the fullest extent of the law*

# Analysis Report

August 16, 2016

**PACIFICORP**
FIELD OFFICE
PO BOX 1005
HUNTINGTON UT 84528



| | | | |
|---|---|---|---|
| Client Sample ID: | 11W-17W SEALS | Sample ID By: | PacifiCorp |
| Date Sampled: | Jul 12, 2016 | Sample Taken By: | CAS KSF |
| Date Received: | Jul 12, 2016 | Time Received: | 1325 |
| Product Description: | WATER | Time Sampled: | 1021 |
| | | Location: | 11W-17W SEALS |
| | | Mine: | 4 |
| | | Field - pH: | 7.66 pH units |
| | | Field - Conductivity: | 929 UMHOS/CM |
| | | Field - Temperature: | 13.4 DEG. C |

Comments: Dissolved Metals Filtered at Lab: Total Selenium 200.8 Analyzed at A.W.A.L.

**SGS Minerals Sample ID: 782-1638403-001**

| TESTS | RESULT | UNIT | METHOD | REPORTING LIMIT | ANALYZED DATE | ANALYZED TIME | ANALYST |
|---|---|---|---|---|---|---|---|
| **METALS BY ICP (continued)** | | | | | | | |
| Selenium, Se - Total | <0.02 | mg/L | EPA 200.7 | 0.02 | 2016-07-14 | 13:00:00 | HF |
| Selenium, Se - Total | <0.002 | mg/L | EPA 200.8 | 0.002 | 2016-08-05 | 13:24:00 | DI |
| Silver, Ag - Total | <0.002 | mg/L | EPA 200.7 | 0.002 | 2016-08-04 | 06:00:00 | HF |
| Sodium, Na - Dissolved | 62.50 | mg/L | EPA 200.7 | 0.09 | 2016-07-19 | 10:00:00 | HF |
| Zinc, Zn - Dissolved | <0.004 | mg/L | EPA 200.7 | 0.004 | 2016-07-19 | 10:00:00 | HF |
| Zinc, Zn - Total | <0.004 | mg/L | EPA 200.7 | 0.004 | 2016-07-14 | 13:00:00 | HF |

Lab Supervisor

Domenic Ibanez
Lab Supervisor

SGS North America Inc. | Minerals Services Division
2035 North Airport Road Huntington UT 84528 t (435) 653-2311 f (435)-653-2436 www.sgs.com/minerals

Member of the SGS Group (Société Générale de Surveillance)

*This document is issued by the Company under its General Conditions of Service accessible at http://www.sgs.com/terms_and_conditions.htm. Attention is drawn to the limitation of liability, indemnification and jurisdiction issues defined therein.*

*Any holder of this document is advised that information contained hereon reflects the Company's findings at the time of its intervention only and within the limits of Client's instructions, if any. The Company's sole responsibility is to its Client and this document does not exonerate parties to a transaction from exercising all their rights and obligations under the transaction documents. Any unauthorized alteration, forgery or falsification of the content or appearance of this document is unlawful and offenders may be prosecuted to the fullest extent of the law*

# Analysis Report

September 03, 2016

**PACIFICORP**
FIELD OFFICE
PO BOX 1005
HUNTINGTON UT 84528



| | | | |
|---|---|---|---|
| Client Sample ID: | 11 W 17 W Seals | Sample ID By: | PacifiCorp |
| Date Sampled: | Aug 2, 2016 | Sample Taken By: | CAS |
| Date Received: | Aug 2, 2016 | Time Received: | 1300 |
| Product Description: | WATER | Time Sampled: | 1119 |
| | | Location: | 11W -17W Seals |
| | | Mine: | 4 |
| | | Field - pH: | 7.57 pH units |
| | | Field - Conductivity: | 644 UMHOS/CM |
| | | Field - Temperature: | 13.9 DEG. C |

Comments: Dissolved Metals Filtered at Lab: Total Selenium 200.8 Analyzed at A.W.A.L.

**SGS Minerals Sample ID: 782-1639055-001**

| TESTS | RESULT | UNIT | METHOD | REPORTING LIMIT | ANALYZED DATE | ANALYZED TIME | ANALYST |
|---|---|---|---|---|---|---|---|
| Hardness, mg equivalent CaCO3/L | 314 | mg/L | SM2340-B | 1 | 2016-08-17 | 13:00:00 | HF |
| Acidity | 26 | mg/L | D1067 | 5 | 2016-08-02 | 13:15:00 | MS |
| Anions | 9.26 | meq/L | SM1030E | 0 | 2016-08-17 | 13:00:00 | HF |
| Balance | -0.31 | % | SM1030E | -10 | 2016-08-17 | 13:00:00 | HF |
| Cations | 9.20 | meq/L | SM1030E | 0 | 2016-08-17 | 13:00:00 | HF |
| Alkalinity, mg CaCO3/L (pH 4.5) | 350 | mg/L | SM2320-B | 5 | 2016-08-15 | 12:00:00 | HF |
| Bicarbonate Alkalinity as CaCO3 | 350 | mg/L | SM2320-B | 5 | 2016-08-15 | 12:00:00 | HF |
| Carbonate Alkalinity as CaCO3 | <5 | mg/L | SM2320-B | 5 | 2016-08-15 | 12:00:00 | HF |
| Nitrogen, Ammonia | 2.0 | mg/L | SM4500-B-D | 0.1 | 2016-08-25 | 08:00:00 | MS |
| pH | 7.40 | | SM4500-H | 0.01 | 2016-08-02 | 13:15:00 | MS |
| pH Temperature | 16.00 | °C | SM4500-H | 0.01 | 2016-08-02 | 13:15:00 | MS |
| Conductivity | 785 | µmhos/cm | SM2510 | 0.1 | 2016-08-02 | 13:15:00 | MS |
| Total Dissolved Solids | 499 | mg/L | SM2540-C | 30 | 2016-08-03 | 14:00:00 | HF |
| Nitrate | 0.05 | mg/L | EPA 300.0 | 0.05 | 2016-08-02 | 21:47:00 | HF |
| Nitrite | <0.05 | mg/L | EPA 300.0 | 0.05 | 2016-08-02 | 21:47:00 | HF |
| Chloride, Cl | 11 | mg/L | EPA 300.0 | 1 | 2016-08-02 | 21:47:00 | HF |
| Sulfate, SO4 | 94 | mg/L | EPA 300.0 | 1 | 2016-08-02 | 21:47:00 | HF |
| Ortho-Phosphate-P | <0.05 | mg/L | EPA 300.0 | 0.05 | 2016-08-02 | 21:47:00 | HF |
| Mercury, Hg - Total | <0.2 | µg/L | EPA 245.1 | 0.2 | 2016-08-04 | 07:00:00 | HF |

**METALS BY ICP**

Lab Supervisor

Domenic Ibanez
Lab Supervisor

SGS North America Inc. | Minerals Services Division
2035 North Airport Road Huntington UT 84528 t (435) 653-2311 f (435)-653-2436 www.sgs.com/minerals

Member of the SGS Group (Société Générale de Surveillance)

*This document is issued by the Company under its General Conditions of Service accessible at http://www.sgs.com/terms_and_conditions.htm. Attention is drawn to the limitation of liability, indemnification and jurisdiction issues defined therein.*

*Any holder of this document is advised that information contained hereon reflects the Company's findings at the time of its intervention only and within the limits of Client's instructions, if any. The Company's sole responsibility is to its Client and this document does not exonerate parties to a transaction from exercising all their rights and obligations under the transaction documents. Any unauthorized alteration, forgery or falsification of the content or appearance of this document is unlawful and offenders may be prosecuted to the fullest extent of the law*

SGS

# Analysis Report

September 03, 2016

**PACIFICORP**
FIELD OFFICE
PO BOX 1005
HUNTINGTON UT 84528



| | | | |
|---|---|---|---|
| Client Sample ID: | 11 W 17 W Seals | Sample ID By: | PacifiCorp |
| Date Sampled: | Aug 2, 2016 | Sample Taken By: | CAS |
| Date Received: | Aug 2, 2016 | Time Received: | 1300 |
| Product Description: | WATER | Time Sampled: | 1119 |
| | | Location: | 11W -17W Seals |
| | | Mine: | 4 |
| | | Field - pH: | 7.57 pH units |
| | | Field - Conductivity: | 644 UMHOS/CM |
| | | Field - Temperature: | 13.9 DEG. C |

Comments: Dissolved Metals Filtered at Lab: Total Selenium 200.8 Analyzed at A.W.A.L.

**SGS Minerals Sample ID: 782-1639055-001**

| TESTS | RESULT | UNIT | METHOD | REPORTING LIMIT | ANALYZED DATE | ANALYZED TIME | ANALYST |
|---|---|---|---|---|---|---|---|
| **METALS BY ICP (continued)** | | | | | | | |
| Aluminum, Al - Dissolved | <0.03 | mg/L | EPA 200.7 | 0.03 | 2016-08-16 | 17:00:00 | HF |
| Arsenic, As - Total | <0.01 | mg/L | EPA 200.7 | 0.01 | 2016-08-08 | 11:35:00 | HF |
| Arsenic, As - Dissolved | <0.01 | mg/L | EPA 200.7 | 0.01 | 2016-08-16 | 17:00:00 | HF |
| Boron, B - Total | 0.21 | mg/L | EPA 200.7 | 0.01 | 2016-08-08 | 11:35:00 | HF |
| Cadmium, Cd - Total | <0.001 | mg/L | EPA 200.7 | 0.001 | 2016-08-08 | 11:35:00 | HF |
| Cadmium, Cd - Dissolved | <0.001 | mg/L | EPA 200.7 | 0.001 | 2016-08-16 | 17:00:00 | HF |
| Calcium, Ca - Dissolved | 59.54 | mg/L | EPA 200.7 | 0.03 | 2016-08-16 | 17:00:00 | HF |
| Chromium, Cr - Total | 0.004 | mg/L | EPA 200.7 | 0.001 | 2016-08-08 | 11:35:00 | HF |
| Copper, Cu - Total | <0.01 | mg/L | EPA 200.7 | 0.01 | 2016-08-08 | 11:35:00 | HF |
| Copper, Cu - Dissolved | <0.01 | mg/L | EPA 200.7 | 0.01 | 2016-08-16 | 17:00:00 | HF |
| Iron, Fe - Total | 1.48 | mg/L | EPA 200.7 | 0.05 | 2016-08-08 | 11:35:00 | HF |
| Iron, Fe - Dissolved | <0.03 | mg/L | EPA 200.7 | 0.03 | 2016-08-16 | 17:00:00 | HF |
| Lead, Pb - Total | <0.01 | mg/L | EPA 200.7 | 0.01 | 2016-08-08 | 11:35:00 | HF |
| Lead, Pb - Dissolved | <0.01 | mg/L | EPA 200.7 | 0.01 | 2016-08-16 | 17:00:00 | HF |
| Magnesium, Mg - Dissolved | 40.04 | mg/L | EPA 200.7 | 0.01 | 2016-08-16 | 17:00:00 | HF |
| Manganese, Mn - Total | 0.021 | mg/L | EPA 200.7 | 0.002 | 2016-08-08 | 11:35:00 | HF |
| Manganese, Mn - Dissolved | 0.015 | mg/L | EPA 200.7 | 0.002 | 2016-08-16 | 17:00:00 | HF |
| Molybdenum, Mo - Dissolved | 0.010 | mg/L | EPA 200.7 | 0.005 | 2016-08-16 | 17:00:00 | HF |
| Nickel, Ni - Total | 0.036 | mg/L | EPA 200.7 | 0.001 | 2016-08-08 | 11:35:00 | HF |
| Potassium, K - Dissolved | 10.12 | mg/L | EPA 200.7 | 0.14 | 2016-08-16 | 17:00:00 | HF |

Lab Supervisor

Domenic Ibanez
Lab Supervisor

SGS North America Inc. | Minerals Services Division
2035 North Airport Road Huntington UT 84528 t (435) 653-2311 f (435)-653-2436 www.sgs.com/minerals

Member of the SGS Group (Société Générale de Surveillance)

*This document is issued by the Company under its General Conditions of Service accessible at http://www.sgs.com/terms_and_conditions.htm. Attention is drawn to the limitation of liability, indemnification and jurisdiction issues defined therein.*

*Any holder of this document is advised that information contained hereon reflects the Company's findings at the time of its intervention only and within the limits of Client's instructions, if any. The Company's sole responsibility is to its Client and this document does not exonerate parties to a transaction from exercising all their rights and obligations under the transaction documents. Any unauthorized alteration, forgery or falsification of the content or appearance of this document is unlawful and offenders may be prosecuted to the fullest extent of the law*

SGS

# Analysis Report

September 03, 2016

**PACIFICORP**
FIELD OFFICE
PO BOX 1005
HUNTINGTON UT 84528



| | | | |
|---|---|---|---|
| Client Sample ID: | 11 W 17 W Seals | Sample ID By: | PacifiCorp |
| Date Sampled: | Aug 2, 2016 | Sample Taken By: | CAS |
| Date Received: | Aug 2, 2016 | Time Received: | 1300 |
| Product Description: | WATER | Time Sampled: | 1119 |
| | | Location: | 11W -17W Seals |
| | | Mine: | 4 |
| | | Field - pH: | 7.57 pH units |
| | | Field - Conductivity: | 644 UMHOS/CM |
| | | Field - Temperature: | 13.9 DEG. C |

Comments: Dissolved Metals Filtered at Lab: Total Selenium 200.8 Analyzed at A.W.A.L.

**SGS Minerals Sample ID: 782-1639055-001**

| TESTS | RESULT | UNIT | METHOD | REPORTING LIMIT | ANALYZED DATE | TIME | ANALYST |
|---|---|---|---|---|---|---|---|
| **METALS BY ICP (continued)** | | | | | | | |
| Selenium, Se - Total | <0.02 | mg/L | EPA 200.7 | 0.02 | 2016-08-08 | 11:35:00 | HF |
| Selenium, Se - Total | <0.002 | mg/L | EPA 200.8 | 0.002 | 2016-08-05 | 13:24:00 | DI |
| Silver, Ag - Total | <0.002 | mg/L | EPA 200.7 | 0.002 | 2016-08-04 | 06:00:00 | HF |
| Sodium, Na - Dissolved | 61.54 | mg/L | EPA 200.7 | 0.09 | 2016-08-16 | 17:00:00 | HF |
| Zinc, Zn - Dissolved | 0.012 | mg/L | EPA 200.7 | 0.004 | 2016-08-16 | 17:00:00 | HF |
| Zinc, Zn - Total | <0.004 | mg/L | EPA 200.7 | 0.004 | 2016-08-08 | 11:35:00 | HF |

Lab Supervisor

Domenic Ibanez
Lab Supervisor

SGS North America Inc. | Minerals Services Division
2035 North Airport Road Huntington UT 84528 t (435) 653-2311 f (435)-653-2436 www.sgs.com/minerals

Member of the SGS Group (Société Générale de Surveillance)

*This document is issued by the Company under its General Conditions of Service accessible at http://www.sgs.com/terms_and_conditions.htm. Attention is drawn to the limitation of liability, indemnification and jurisdiction issues defined therein.*

*Any holder of this document is advised that information contained hereon reflects the Company's findings at the time of its intervention only and within the limits of Client's instructions, if any. The Company's sole responsibility is to its Client and this document does not exonerate parties to a transaction from exercising all their rights and obligations under the transaction documents. Any unauthorized alteration, forgery or falsification of the content or appearance of this document is unlawful and offenders may be prosecuted to the fullest extent of the law*

# Analysis Report

December 09, 2016

**PACIFICORP**
FIELD OFFICE
PO BOX 1005
HUNTINGTON UT 84528



| | | | |
|---|---|---|---|
| Client Sample ID: | 11W - 17W SEALS | Sample ID By: | PacifiCorp |
| Date Sampled: | Sep 6, 2016 | Sample Taken By: | KSF |
| Date Received: | Sep 6, 2016 | Time Received: | 1540 |
| Product Description: | WATER | Time Sampled: | 1416 |
| | | Location: | 11W - 17W SEALS |
| | | Mine: | 4 |
| | | Site: | 52 |
| | | Field - pH: | 7.51 pH units |
| | | Field - Conductivity: | 930 UMHOS/CM |
| | | Field - Temperature: | 12.4 DEG. C |

Comments: Dissolved Metals Filtered at Lab; Selenium 200.8 Analyzed at A.W.A.L.

**SGS Minerals Sample ID: 782-1640262-001**

| TESTS | RESULT | UNIT | METHOD | REPORTING LIMIT | ANALYZED DATE | ANALYZED TIME | ANALYST |
|---|---|---|---|---|---|---|---|
| Hardness, mg equivalent CaCO3/L | 307 | mg/L | SM2340-B | 1 | 2016-09-26 | 17:25:33 | DI |
| Acidity | 15 | mg/L | D1067 | 5 | 2016-09-15 | 08:00:00 | MS |
| Anions | 9.41 | meq/L | SM1030E | 0 | 2016-09-26 | 17:25:33 | DI |
| Balance | -1.50 | % | SM1030E | -10 | 2016-09-26 | 17:25:33 | DI |
| Cations | 9.13 | meq/L | SM1030E | 0 | 2016-09-26 | 17:25:33 | DI |
| Alkalinity, mg CaCO3/L (pH 4.5) | 358 | mg/L | SM2320-B | 5 | 2016-09-08 | 09:00:00 | MS |
| Bicarbonate Alkalinity as CaCO3 | 358 | mg/L | SM2320-B | 5 | 2016-09-08 | 09:00:00 | MS |
| Carbonate Alkalinity as CaCO3 | <5 | mg/L | SM2320-B | 5 | 2016-09-08 | 09:00:00 | MS |
| Nitrogen, Ammonia | 0.6 | mg/L | SM4500-B-D | 0.1 | 2016-09-23 | 09:00:00 | MS |
| pH | 7.40 | | SM4500-H | 0.01 | 2016-09-06 | 16:57:00 | SM |
| pH Temperature | 14.70 | °C | SM4500-H | 0.01 | 2016-09-06 | 16:57:00 | SM |
| Conductivity | 889 | µmhos/cm | SM2510 | 0.1 | 2016-09-09 | 07:30:00 | MS |
| Total Dissolved Solids | 506 | mg/L | SM2540-C | 30 | 2016-09-06 | 18:00:00 | MS |
| Nitrate | 0.07 | mg/L | EPA 300.0 | 0.05 | 2016-09-06 | 21:21:00 | DI |
| Nitrite | <0.05 | mg/L | EPA 300.0 | 0.05 | 2016-09-06 | 21:21:00 | DI |
| Chloride, Cl | 11 | mg/L | EPA 300.0 | 1 | 2016-09-06 | 21:21:00 | DI |
| Sulfate, SO4 | 93 | mg/L | EPA 300.0 | 1 | 2016-09-06 | 21:21:00 | DI |
| Ortho-Phosphate-P | <0.05 | mg/L | EPA 300.0 | 0.05 | 2016-09-06 | 21:21:00 | DI |
| Mercury, Hg - Total | <0.2 | µg/L | EPA 245.1 | 0.2 | 2016-10-03 | 08:00:00 | DI |

Lab Supervisor

Domenic Ibanez
Lab Supervisor

SGS North America Inc. | Minerals Services Division
2035 North Airport Road Huntington UT 84528 t (435) 653-2311 f (435)-653-2436 www.sgs.com/minerals

Member of the SGS Group (Société Générale de Surveillance)

*This document is issued by the Company under its General Conditions of Service accessible at http://www.sgs.com/terms_and_conditions.htm. Attention is drawn to the limitation of liability, indemnification and jurisdiction issues defined therein.*

*Any holder of this document is advised that information contained hereon reflects the Company's findings at the time of its intervention only and within the limits of Client's instructions, if any. The Company's sole responsibility is to its Client and this document does not exonerate parties to a transaction from exercising all their rights and obligations under the transaction documents. Any unauthorized alteration, forgery or falsification of the content or appearance of this document is unlawful and offenders may be prosecuted to the fullest extent of the law*

# Analysis Report

December 09, 2016

**PACIFICORP**
FIELD OFFICE
PO BOX 1005
HUNTINGTON UT 84528



| | | | |
|---|---|---|---|
| Client Sample ID: | 11W - 17W SEALS | Sample ID By: | PacifiCorp |
| Date Sampled: | Sep 6, 2016 | Sample Taken By: | KSF |
| Date Received: | Sep 6, 2016 | Time Received: | 1540 |
| Product Description: | WATER | Time Sampled: | 1416 |
| | | Location: | 11W - 17W SEALS |
| | | Mine: | 4 |
| | | Site: | 52 |
| | | Field - pH: | 7.51 pH units |
| | | Field - Conductivity: | 930 UMHOS/CM |
| | | Field - Temperature: | 12.4 DEG. C |

Comments: Dissolved Metals Filtered at Lab; Selenium 200.8 Analyzed at A.W.A.L.

**SGS Minerals Sample ID: 782-1640262-001**

| TESTS | RESULT | UNIT | METHOD | REPORTING LIMIT | ANALYZED DATE | ANALYZED TIME | ANALYST |
|---|---|---|---|---|---|---|---|
| **METALS BY ICP** | | | | | | | |
| Aluminum, Al - Dissolved | 0.05 | mg/L | EPA 200.7 | 0.03 | 2016-09-21 | 15:18:00 | DI |
| Arsenic, As - Total | <0.01 | mg/L | EPA 200.7 | 0.01 | 2016-09-07 | 16:30:00 | DI |
| Arsenic, As - Dissolved | <0.01 | mg/L | EPA 200.7 | 0.01 | 2016-09-21 | 15:18:00 | DI |
| Boron, B - Total | 0.21 | mg/L | EPA 200.7 | 0.01 | 2016-09-07 | 16:30:00 | DI |
| Cadmium, Cd - Total | <0.001 | mg/L | EPA 200.7 | 0.001 | 2016-09-07 | 16:30:00 | DI |
| Cadmium, Cd - Dissolved | <0.001 | mg/L | EPA 200.7 | 0.001 | 2016-09-21 | 15:18:00 | DI |
| Calcium, Ca - Dissolved | 55.74 | mg/L | EPA 200.7 | 0.03 | 2016-09-21 | 15:18:00 | DI |
| Chromium, Cr - Total | 0.003 | mg/L | EPA 200.7 | 0.001 | 2016-09-07 | 16:30:00 | DI |
| Copper, Cu - Total | <0.01 | mg/L | EPA 200.7 | 0.01 | 2016-09-07 | 16:30:00 | DI |
| Copper, Cu - Dissolved | <0.01 | mg/L | EPA 200.7 | 0.01 | 2016-09-21 | 15:18:00 | DI |
| Iron, Fe - Total | 1.44 | mg/L | EPA 200.7 | 0.05 | 2016-09-07 | 16:30:00 | DI |
| Iron, Fe - Dissolved | <0.03 | mg/L | EPA 200.7 | 0.03 | 2016-09-21 | 15:18:00 | DI |
| Lead, Pb - Total | <0.01 | mg/L | EPA 200.7 | 0.01 | 2016-09-07 | 16:30:00 | DI |
| Lead, Pb - Dissolved | <0.01 | mg/L | EPA 200.7 | 0.01 | 2016-09-21 | 15:18:00 | DI |
| Magnesium, Mg - Dissolved | 40.79 | mg/L | EPA 200.7 | 0.01 | 2016-09-21 | 15:18:00 | DI |
| Manganese, Mn - Total | 0.018 | mg/L | EPA 200.7 | 0.002 | 2016-09-07 | 16:30:00 | DI |
| Manganese, Mn - Dissolved | 0.009 | mg/L | EPA 200.7 | 0.002 | 2016-09-21 | 15:18:00 | DI |
| Molybdenum, Mo - Dissolved | 0.014 | mg/L | EPA 200.7 | 0.005 | 2016-09-26 | 10:15:39 | DI |
| Nickel, Ni - Total | 0.035 | mg/L | EPA 200.7 | 0.001 | 2016-09-07 | 16:30:00 | DI |

Lab Supervisor

Domenic Ibanez
Lab Supervisor

SGS North America Inc. | Minerals Services Division
2035 North Airport Road Huntington UT 84528 t (435) 653-2311 f (435)-653-2436 www.sgs.com/minerals

Member of the SGS Group (Société Générale de Surveillance)

*This document is issued by the Company under its General Conditions of Service accessible at http://www.sgs.com/terms_and_conditions.htm. Attention is drawn to the limitation of liability, indemnification and jurisdiction issues defined therein.*

*Any holder of this document is advised that information contained hereon reflects the Company's findings at the time of its intervention only and within the limits of Client's instructions, if any. The Company's sole responsibility is to its Client and this document does not exonerate parties to a transaction from exercising all their rights and obligations under the transaction documents. Any unauthorized alteration, forgery or falsification of the content or appearance of this document is unlawful and offenders may be prosecuted to the fullest extent of the law*

SGS

# Analysis Report

December 09, 2016

**PACIFICORP**
FIELD OFFICE
PO BOX 1005
HUNTINGTON UT 84528



| | | | |
|---|---|---|---|
| Client Sample ID: | 11W - 17W SEALS | Sample ID By: | PacifiCorp |
| Date Sampled: | Sep 6, 2016 | Sample Taken By: | KSF |
| Date Received: | Sep 6, 2016 | Time Received: | 1540 |
| Product Description: | WATER | Time Sampled: | 1416 |
| | | Location: | 11W - 17W SEALS |
| | | Mine: | 4 |
| | | Site: | 52 |
| | | Field - pH: | 7.51 pH units |
| | | Field - Conductivity: | 930 UMHOS/CM |
| | | Field - Temperature: | 12.4 DEG. C |

Comments: Dissolved Metals Filtered at Lab; Selenium 200.8 Analyzed at A.W.A.L.

**SGS Minerals Sample ID: 782-1640262-001**

| TESTS | RESULT | UNIT | METHOD | REPORTING LIMIT | ANALYZED DATE | ANALYZED TIME | ANALYST |
|---|---|---|---|---|---|---|---|
| **METALS BY ICP (continued)** | | | | | | | |
| Potassium, K - Dissolved | 10.21 | mg/L | EPA 200.7 | 0.14 | 2016-09-21 | 15:18:00 | DI |
| Selenium, Se - Total | <0.02 | mg/L | EPA 200.7 | 0.02 | 2016-09-07 | 16:30:00 | DI |
| Selenium, Se - Total | <0.002 | mg/L | EPA 200.8 | 0.002 | 2016-09-09 | 09:47:00 | DI |
| Silver, Ag - Total | <0.002 | mg/L | EPA 200.7 | 0.002 | 2016-10-03 | 17:00:36 | DI |
| Sodium, Na - Dissolved | 62.81 | mg/L | EPA 200.7 | 0.09 | 2016-09-26 | 10:15:39 | DI |
| Zinc, Zn - Total | <0.004 | mg/L | EPA 200.7 | 0.004 | 2016-09-07 | 16:30:00 | DI |
| Zinc, Zn - Dissolved | <0.004 | mg/L | EPA 200.7 | 0.004 | 2016-09-21 | 15:18:00 | DI |

Lab Supervisor

Domenic Ibanez
Lab Supervisor

SGS North America Inc. | Minerals Services Division
2035 North Airport Road Huntington UT 84528 t (435) 653-2311 f (435)-653-2436 www.sgs.com/minerals

Member of the SGS Group (Société Générale de Surveillance)

*This document is issued by the Company under its General Conditions of Service accessible at http://www.sgs.com/terms_and_conditions.htm. Attention is drawn to the limitation of liability, indemnification and jurisdiction issues defined therein.*

*Any holder of this document is advised that information contained hereon reflects the Company's findings at the time of its intervention only and within the limits of Client's instructions, if any. The Company's sole responsibility is to its Client and this document does not exonerate parties to a transaction from exercising all their rights and obligations under the transaction documents. Any unauthorized alteration, forgery or falsification of the content or appearance of this document is unlawful and offenders may be prosecuted to the fullest extent of the law*

# Analysis Report

December 09, 2016

**PACIFICORP**
FIELD OFFICE
PO BOX 1005
HUNTINGTON UT 84528



| | | | |
|---|---|---|---|
| Client Sample ID: | 11W-17W Seals | Sample ID By: | PacifiCorp |
| Date Sampled: | Oct 6, 2016 | Sample Taken By: | KSF |
| Date Received: | Oct 6, 2016 | Time Received: | 1230 |
| Product Description: | WATER | Time Sampled: | 1058 |
| | | Location: | 11W-17W Seals |
| | | Mine: | 4 |
| | | Site: | 52 |
| | | Field - pH: | 7.41 pH units |
| | | Field - Conductivity: | 978 UMHOS/CM |
| | | Field - Temperature: | 12.4 DEG. C |

Comments: Dissolved Metals Filtered at Lab: Total Selenium analyzed at A.W.A.L.

**SGS Minerals Sample ID: 782-1641265-001**

| TESTS | RESULT | UNIT | METHOD | REPORTING LIMIT | ANALYZED DATE | ANALYZED TIME | ANALYST |
|---|---|---|---|---|---|---|---|
| Hardness, mg equivalent CaCO3/L | 310 | mg/L | SM2340-B | 1 | 2016-11-11 | 15:20:00 | DI |
| Acidity | <5 | mg/L | D1067 | 5 | 2016-10-11 | 09:00:00 | MS |
| Anions | 9.51 | meq/L | SM1030E | 0 | 2016-11-11 | 15:20:00 | DI |
| Balance | -1.99 | % | SM1030E | -10 | 2016-11-11 | 15:20:00 | DI |
| Cations | 9.14 | meq/L | SM1030E | 0 | 2016-11-11 | 15:20:00 | DI |
| Alkalinity, mg CaCO3/L (pH 4.5) | 364 | mg/L | SM2320-B | 5 | 2016-10-13 | 15:56:00 | LR |
| Bicarbonate Alkalinity as CaCO3 | 364 | mg/L | SM2320-B | 5 | 2016-10-13 | 15:56:00 | LR |
| Carbonate Alkalinity as CaCO3 | <5 | mg/L | SM2320-B | 5 | 2016-10-13 | 15:56:00 | LR |
| Nitrogen, Ammonia | <0.1 | mg/L | SM4500-B-D | 0.1 | 2016-10-14 | 08:00:00 | MS |
| pH | 8.33 | | SM4500-H | 0.01 | 2016-10-06 | 14:00:00 | SM |
| pH Temperature | 7.90 | °C | SM4500-H | 0.01 | 2016-10-06 | 14:00:00 | SM |
| Conductivity | 851 | µmhos/cm | SM2510 | 0.1 | 2016-10-07 | 12:00:00 | MS |
| Total Dissolved Solids | 523 | mg/L | SM2540-C | 30 | 2016-10-06 | 15:00:00 | MS |
| Nitrate | <0.05 | mg/L | EPA 300.0 | 0.05 | 2016-10-12 | 10:28:00 | LR |
| Nitrite | 0.11 | mg/L | EPA 300.0 | 0.05 | 2016-10-12 | 10:28:00 | LR |
| Chloride, Cl | 11 | mg/L | EPA 300.0 | 1 | 2016-10-12 | 10:28:00 | LR |
| Sulfate, SO4 | 93 | mg/L | EPA 300.0 | 1 | 2016-10-12 | 10:28:00 | LR |
| Ortho-Phosphate-P | <0.05 | mg/L | EPA 300.0 | 0.05 | 2016-10-12 | 10:28:00 | LR |
| Mercury, Hg - Total | <0.2 | µg/L | EPA 245.1 | 0.2 | 2016-11-03 | 14:41:00 | DI |

Lab Supervisor

Domenic Ibanez
Lab Supervisor

SGS North America Inc. | Minerals Services Division
2035 North Airport Road Huntington UT 84528 t (435) 653-2311 f (435)-653-2436 www.sgs.com/minerals

Member of the SGS Group (Société Générale de Surveillance)

*This document is issued by the Company under its General Conditions of Service accessible at http://www.sgs.com/terms_and_conditions.htm. Attention is drawn to the limitation of liability, indemnification and jurisdiction issues defined therein.*

*Any holder of this document is advised that information contained hereon reflects the Company's findings at the time of its intervention only and within the limits of Client's instructions, if any. The Company's sole responsibility is to its Client and this document does not exonerate parties to a transaction from exercising all their rights and obligations under the transaction documents. Any unauthorized alteration, forgery or falsification of the content or appearance of this document is unlawful and offenders may be prosecuted to the fullest extent of the law*

# Analysis Report

December 09, 2016

**PACIFICORP**
FIELD OFFICE
PO BOX 1005
HUNTINGTON UT 84528



| | | | |
|---|---|---|---|
| Client Sample ID: | 11W-17W Seals | Sample ID By: | PacifiCorp |
| Date Sampled: | Oct 6, 2016 | Sample Taken By: | KSF |
| Date Received: | Oct 6, 2016 | Time Received: | 1230 |
| Product Description: | WATER | Time Sampled: | 1058 |
| | | Location: | 11W-17W Seals |
| | | Mine: | 4 |
| | | Site: | 52 |
| | | Field - pH: | 7.41 pH units |
| | | Field - Conductivity: | 978 UMHOS/CM |
| | | Field - Temperature: | 12.4 DEG. C |

Comments: Dissolved Metals Filtered at Lab: Total Selenium analyzed at A.W.A.L.

**SGS Minerals Sample ID: 782-1641265-001**

| TESTS | RESULT | UNIT | METHOD | REPORTING LIMIT | ANALYZED DATE | ANALYZED TIME | ANALYST |
|---|---|---|---|---|---|---|---|
| **METALS BY ICP** | | | | | | | |
| Aluminum, Al - Dissolved | <0.03 | mg/L | EPA 200.7 | 0.03 | 2016-10-17 | 16:51:00 | DI |
| Arsenic, As - Total | <0.01 | mg/L | EPA 200.7 | 0.01 | 2016-10-12 | 11:39:00 | DI |
| Arsenic, As - Dissolved | <0.01 | mg/L | EPA 200.7 | 0.01 | 2016-10-17 | 16:51:00 | DI |
| Boron, B - Total | 0.21 | mg/L | EPA 200.7 | 0.01 | 2016-10-12 | 11:39:00 | DI |
| Cadmium, Cd - Total | <0.001 | mg/L | EPA 200.7 | 0.001 | 2016-10-12 | 11:39:00 | DI |
| Cadmium, Cd - Dissolved | <0.001 | mg/L | EPA 200.7 | 0.001 | 2016-10-17 | 16:51:00 | DI |
| Calcium, Ca - Dissolved | 59.27 | mg/L | EPA 200.7 | 0.03 | 2016-10-17 | 16:51:00 | DI |
| Chromium, Cr - Total | 0.002 | mg/L | EPA 200.7 | 0.001 | 2016-10-12 | 11:39:00 | DI |
| Copper, Cu - Total | <0.01 | mg/L | EPA 200.7 | 0.01 | 2016-10-12 | 11:39:00 | DI |
| Copper, Cu - Dissolved | <0.01 | mg/L | EPA 200.7 | 0.01 | 2016-10-17 | 16:51:00 | DI |
| Iron, Fe - Total | 1.45 | mg/L | EPA 200.7 | 0.05 | 2016-10-12 | 11:39:00 | DI |
| Iron, Fe - Dissolved | <0.03 | mg/L | EPA 200.7 | 0.03 | 2016-10-17 | 16:51:00 | DI |
| Lead, Pb - Total | <0.01 | mg/L | EPA 200.7 | 0.01 | 2016-10-12 | 11:39:00 | DI |
| Lead, Pb - Dissolved | <0.01 | mg/L | EPA 200.7 | 0.01 | 2016-10-17 | 16:51:00 | DI |
| Magnesium, Mg - Dissolved | 39.22 | mg/L | EPA 200.7 | 0.01 | 2016-10-17 | 16:51:00 | DI |
| Manganese, Mn - Total | 0.020 | mg/L | EPA 200.7 | 0.002 | 2016-10-12 | 11:39:00 | DI |
| Manganese, Mn - Dissolved | 0.017 | mg/L | EPA 200.7 | 0.002 | 2016-10-17 | 16:51:00 | DI |
| Molybdenum, Mo - Dissolved | 0.012 | mg/L | EPA 200.7 | 0.005 | 2016-10-17 | 16:51:00 | DI |
| Nickel, Ni - Total | 0.035 | mg/L | EPA 200.7 | 0.001 | 2016-10-12 | 11:39:00 | DI |

Lab Supervisor

Domenic Ibanez
Lab Supervisor

SGS North America Inc. | Minerals Services Division
2035 North Airport Road Huntington UT 84528 t (435) 653-2311 f (435)-653-2436 www.sgs.com/minerals

Member of the SGS Group (Société Générale de Surveillance)

*This document is issued by the Company under its General Conditions of Service accessible at http://www.sgs.com/terms_and_conditions.htm. Attention is drawn to the limitation of liability, indemnification and jurisdiction issues defined therein.*

*Any holder of this document is advised that information contained hereon reflects the Company's findings at the time of its intervention only and within the limits of Client's instructions, if any. The Company's sole responsibility is to its Client and this document does not exonerate parties to a transaction from exercising all their rights and obligations under the transaction documents. Any unauthorized alteration, forgery or falsification of the content or appearance of this document is unlawful and offenders may be prosecuted to the fullest extent of the law*

# Analysis Report

December 09, 2016

**PACIFICORP**
FIELD OFFICE
PO BOX 1005
HUNTINGTON UT 84528



| | | | |
|---|---|---|---|
| Client Sample ID: | 11W-17W Seals | Sample ID By: | PacifiCorp |
| Date Sampled: | Oct 6, 2016 | Sample Taken By: | KSF |
| Date Received: | Oct 6, 2016 | Time Received: | 1230 |
| Product Description: | WATER | Time Sampled: | 1058 |
| | | Location: | 11W-17W Seals |
| | | Mine: | 4 |
| | | Site: | 52 |
| | | Field - pH: | 7.41 pH units |
| | | Field - Conductivity: | 978 UMHOS/CM |
| | | Field - Temperature: | 12.4 DEG. C |

Comments: Dissolved Metals Filtered at Lab: Total Selenium analyzed at A.W.A.L.

**SGS Minerals Sample ID: 782-1641265-001**

| TESTS | RESULT | UNIT | METHOD | REPORTING LIMIT | ANALYZED DATE | ANALYZED TIME | ANALYST |
|---|---|---|---|---|---|---|---|
| **METALS BY ICP (continued)** | | | | | | | |
| Potassium, K - Dissolved | 10.28 | mg/L | EPA 200.7 | 0.14 | 2016-10-17 | 16:51:00 | DI |
| Selenium, Se - Total | <0.02 | mg/L | EPA 200.7 | 0.02 | 2016-10-12 | 11:39:00 | DI |
| Selenium, Se - Total | <0.002 | mg/L | EPA 200.8 | 0.002 | 2016-10-24 | 08:21:00 | DI |
| Silver, Ag - Total | <0.002 | mg/L | EPA 200.7 | 0.002 | 2016-11-04 | 11:00:00 | DI |
| Sodium, Na - Dissolved | 61.85 | mg/L | EPA 200.7 | 0.09 | 2016-10-17 | 16:51:00 | DI |
| Zinc, Zn - Total | <0.004 | mg/L | EPA 200.7 | 0.004 | 2016-10-12 | 11:39:00 | DI |
| Zinc, Zn - Dissolved | <0.004 | mg/L | EPA 200.7 | 0.004 | 2016-10-17 | 16:51:00 | DI |

Lab Supervisor

Domenic Ibanez
Lab Supervisor

SGS North America Inc. | Minerals Services Division
2035 North Airport Road Huntington UT 84528 t (435) 653-2311 f (435)-653-2436 www.sgs.com/minerals

Member of the SGS Group (Société Générale de Surveillance)

*This document is issued by the Company under its General Conditions of Service accessible at http://www.sgs.com/terms_and_conditions.htm. Attention is drawn to the limitation of liability, indemnification and jurisdiction issues defined therein.*

*Any holder of this document is advised that information contained hereon reflects the Company's findings at the time of its intervention only and within the limits of Client's instructions, if any. The Company's sole responsibility is to its Client and this document does not exonerate parties to a transaction from exercising all their rights and obligations under the transaction documents. Any unauthorized alteration, forgery or falsification of the content or appearance of this document is unlawful and offenders may be prosecuted to the fullest extent of the law*

# Analysis Report

December 12, 2016

**PACIFICORP**
FIELD OFFICE
PO BOX 1005
HUNTINGTON UT 84528



| | | | |
|---|---|---|---|
| Client Sample ID: | 11W - 17W Seals | Sample ID By: | PacifiCorp |
| Date Sampled: | Nov 3, 2016 | Sample Taken By: | KSF |
| Date Received: | Nov 3, 2016 | Time Received: | 1530 |
| Product Description: | WATER | Time Sampled: | 1321 |
| | | Location: | 11W - 17W Seals |
| | | Mine: | 4 |
| | | Site: | 52 |
| | | Field - pH: | 7.53 pH units |
| | | Field - Conductivity: | 895 UMHOS/CM |
| | | Field - Temperature: | 13.2 DEG. C |

Comments: Dissolved Metals Filtered at Lab; Total Selenium 200.8 Analyzed at A.W.A.L.

**SGS Minerals Sample ID: 782-1642142-001**

| TESTS | RESULT | UNIT | METHOD | REPORTING LIMIT | ANALYZED DATE | ANALYZED TIME | ANALYST |
|---|---|---|---|---|---|---|---|
| Hardness, mg equivalent CaCO3/L | 300 | mg/L | SM2340-B | 1 | 2016-12-02 | 10:23:40 | DI |
| Acidity | <5 | mg/L | D1067 | 5 | 2016-11-08 | 10:30:00 | SM |
| Anions | 9.60 | meq/L | SM1030E | 0 | 2016-12-02 | 10:23:40 | DI |
| Balance | -3.73 | % | SM1030E | -10 | 2016-12-02 | 10:23:40 | DI |
| Cations | 8.91 | meq/L | SM1030E | 0 | 2016-12-02 | 10:23:40 | DI |
| Alkalinity, mg CaCO3/L (pH 4.5) | 364 | mg/L | SM2320-B | 5 | 2016-11-08 | 13:47:00 | DI |
| Bicarbonate Alkalinity as CaCO3 | 364 | mg/L | SM2320-B | 5 | 2016-11-08 | 13:47:00 | DI |
| Carbonate Alkalinity as CaCO3 | <5 | mg/L | SM2320-B | 5 | 2016-11-08 | 13:47:00 | DI |
| Nitrogen, Ammonia | 3.5 | mg/L | SM4500-B-D | 0.1 | 2016-11-17 | 09:00:00 | MS |
| pH | 7.38 | | SM4500-H | 0.01 | 2016-11-03 | 15:40:00 | SM |
| pH Temperature | 15.40 | °C | SM4500-H | 0.01 | 2016-11-03 | 15:40:00 | SM |
| Conductivity | 845 | µmhos/cm | SM2510 | 0.1 | 2016-11-04 | 07:30:00 | SM |
| Total Dissolved Solids | 518 | mg/L | SM2540-C | 30 | 2016-11-07 | 14:00:00 | MS |
| Nitrate | 0.07 | mg/L | EPA 300.0 | 0.05 | 2016-11-04 | 03:43:00 | LR |
| Nitrite | 0.09 | mg/L | EPA 300.0 | 0.05 | 2016-11-04 | 03:43:00 | LR |
| Chloride, Cl | 11 | mg/L | EPA 300.0 | 1 | 2016-11-04 | 03:43:00 | LR |
| Sulfate, SO4 | 97 | mg/L | EPA 300.0 | 1 | 2016-11-04 | 03:43:00 | LR |
| Ortho-Phosphate-P | <0.05 | mg/L | EPA 300.0 | 0.05 | 2016-11-04 | 03:43:00 | LR |
| Mercury, Hg - Total | <0.2 | µg/L | EPA 245.1 | 0.2 | 2016-12-07 | 17:45:00 | MS |

Lab Supervisor

Domenic Ibanez
Lab Supervisor

SGS North America Inc. | Minerals Services Division
2035 North Airport Road Huntington UT 84528 t (435) 653-2311 f (435)-653-2436 www.sgs.com/minerals

Member of the SGS Group (Société Générale de Surveillance)

*This document is issued by the Company under its General Conditions of Service accessible at http://www.sgs.com/terms_and_conditions.htm. Attention is drawn to the limitation of liability, indemnification and jurisdiction issues defined therein.*

*Any holder of this document is advised that information contained hereon reflects the Company's findings at the time of its intervention only and within the limits of Client's instructions, if any. The Company's sole responsibility is to its Client and this document does not exonerate parties to a transaction from exercising all their rights and obligations under the transaction documents. Any unauthorized alteration, forgery or falsification of the content or appearance of this document is unlawful and offenders may be prosecuted to the fullest extent of the law*

SGS

# Analysis Report

December 12, 2016

**PACIFICORP**
FIELD OFFICE
PO BOX 1005
HUNTINGTON UT 84528



| | | | |
|---|---|---|---|
| Client Sample ID: | 11W - 17W Seals | Sample ID By: | PacifiCorp |
| Date Sampled: | Nov 3, 2016 | Sample Taken By: | KSF |
| Date Received: | Nov 3, 2016 | Time Received: | 1530 |
| Product Description: | WATER | Time Sampled: | 1321 |
| | | Location: | 11W - 17W Seals |
| | | Mine: | 4 |
| | | Site: | 52 |
| | | Field - pH: | 7.53 pH units |
| | | Field - Conductivity: | 895 UMHOS/CM |
| | | Field - Temperature: | 13.2 DEG. C |

Comments: Dissolved Metals Filtered at Lab; Total Selenium 200.8 Analyzed at A.W.A.L.

**SGS Minerals Sample ID: 782-1642142-001**

| TESTS | RESULT | UNIT | METHOD | REPORTING LIMIT | ANALYZED DATE | ANALYZED TIME | ANALYST |
|---|---|---|---|---|---|---|---|
| **METALS BY ICP** | | | | | | | |
| Aluminum, Al - Dissolved | 0.06 | mg/L | EPA 200.7 | 0.03 | 2016-11-08 | 15:20:00 | DI |
| Arsenic, As - Dissolved | <0.01 | mg/L | EPA 200.7 | 0.01 | 2016-11-08 | 15:20:00 | DI |
| Arsenic, As - Total | <0.01 | mg/L | EPA 200.7 | 0.01 | 2016-11-07 | 10:06:00 | DI |
| Boron, B - Total | 0.19 | mg/L | EPA 200.7 | 0.01 | 2016-11-07 | 14:00:29 | DI |
| Cadmium, Cd - Dissolved | <0.001 | mg/L | EPA 200.7 | 0.001 | 2016-11-08 | 15:20:00 | DI |
| Cadmium, Cd - Total | <0.001 | mg/L | EPA 200.7 | 0.001 | 2016-11-07 | 10:06:00 | DI |
| Calcium, Ca - Dissolved | 58.93 | mg/L | EPA 200.7 | 0.03 | 2016-11-08 | 15:20:00 | DI |
| Chromium, Cr - Total | 0.004 | mg/L | EPA 200.7 | 0.001 | 2016-11-07 | 10:06:00 | DI |
| Copper, Cu - Dissolved | <0.01 | mg/L | EPA 200.7 | 0.01 | 2016-11-08 | 15:20:00 | DI |
| Copper, Cu - Total | <0.01 | mg/L | EPA 200.7 | 0.01 | 2016-11-07 | 10:06:00 | DI |
| Iron, Fe - Total | 0.61 | mg/L | EPA 200.7 | 0.05 | 2016-11-07 | 10:06:00 | DI |
| Iron, Fe - Dissolved | <0.03 | mg/L | EPA 200.7 | 0.03 | 2016-11-08 | 15:20:00 | DI |
| Lead, Pb - Dissolved | <0.01 | mg/L | EPA 200.7 | 0.01 | 2016-11-08 | 15:20:00 | DI |
| Lead, Pb - Total | <0.01 | mg/L | EPA 200.7 | 0.01 | 2016-11-07 | 10:06:00 | DI |
| Magnesium, Mg - Dissolved | 37.07 | mg/L | EPA 200.7 | 0.01 | 2016-11-08 | 15:20:00 | DI |
| Manganese, Mn - Total | 0.020 | mg/L | EPA 200.7 | 0.002 | 2016-11-07 | 10:06:00 | DI |
| Manganese, Mn - Dissolved | 0.020 | mg/L | EPA 200.7 | 0.002 | 2016-11-08 | 15:20:00 | DI |
| Nickel, Ni - Dissolved | 0.030 | mg/L | EPA 200.7 | 0.001 | 2016-11-08 | 15:20:00 | DI |
| Nickel, Ni - Total | 0.030 | mg/L | EPA 200.7 | 0.001 | 2016-11-07 | 10:06:00 | DI |

Lab Supervisor

Domenic Ibanez
Lab Supervisor

SGS North America Inc. | Minerals Services Division
2035 North Airport Road Huntington UT 84528 t (435) 653-2311 f (435)-653-2436 www.sgs.com/minerals

Member of the SGS Group (Société Générale de Surveillance)

*This document is issued by the Company under its General Conditions of Service accessible at http://www.sgs.com/terms_and_conditions.htm. Attention is drawn to the limitation of liability, indemnification and jurisdiction issues defined therein.*

*Any holder of this document is advised that information contained hereon reflects the Company's findings at the time of its intervention only and within the limits of Client's instructions, if any. The Company's sole responsibility is to its Client and this document does not exonerate parties to a transaction from exercising all their rights and obligations under the transaction documents. Any unauthorized alteration, forgery or falsification of the content or appearance of this document is unlawful and offenders may be prosecuted to the fullest extent of the law*

# Analysis Report

December 12, 2016

**PACIFICORP**
FIELD OFFICE
PO BOX 1005
HUNTINGTON UT 84528



| | | | |
|---|---|---|---|
| Client Sample ID: | 11W - 17W Seals | Sample ID By: | PacifiCorp |
| Date Sampled: | Nov 3, 2016 | Sample Taken By: | KSF |
| Date Received: | Nov 3, 2016 | Time Received: | 1530 |
| Product Description: | WATER | Time Sampled: | 1321 |
| | | Location: | 11W - 17W Seals |
| | | Mine: | 4 |
| | | Site: | 52 |
| | | Field - pH: | 7.53 pH units |
| | | Field - Conductivity: | 895 UMHOS/CM |
| | | Field - Temperature: | 13.2 DEG. C |

Comments: Dissolved Metals Filtered at Lab; Total Selenium 200.8 Analyzed at A.W.A.L.

**SGS Minerals Sample ID: 782-1642142-001**

| TESTS | RESULT | UNIT | METHOD | REPORTING LIMIT | ANALYZED DATE | ANALYZED TIME | ANALYST |
|---|---|---|---|---|---|---|---|
| **METALS BY ICP (continued)** | | | | | | | |
| Potassium, K - Dissolved | 10.44 | mg/L | EPA 200.7 | 0.14 | 2016-11-08 | 15:20:00 | DI |
| Selenium, Se - Total | <0.02 | mg/L | EPA 200.7 | 0.02 | 2016-11-07 | 10:06:00 | DI |
| Selenium, Se - Total | <0.002 | mg/L | EPA 200.8 | 0.002 | 2016-11-11 | 12:13:00 | DI |
| Silver, Ag - Total | <0.002 | mg/L | EPA 200.7 | 0.002 | 2016-12-01 | 15:02:16 | DI |
| Sodium, Na - Dissolved | 60.89 | mg/L | EPA 200.7 | 0.09 | 2016-11-08 | 15:20:00 | DI |
| Zinc, Zn - Dissolved | <0.004 | mg/L | EPA 200.7 | 0.004 | 2016-11-08 | 15:20:00 | DI |
| Zinc, Zn - Total | 0.008 | mg/L | EPA 200.7 | 0.004 | 2016-11-07 | 10:06:00 | DI |

Lab Supervisor

Domenic Ibanez
Lab Supervisor

SGS North America Inc. | Minerals Services Division
2035 North Airport Road Huntington UT 84528 t (435) 653-2311 f (435)-653-2436 www.sgs.com/minerals

Member of the SGS Group (Société Générale de Surveillance)

*This document is issued by the Company under its General Conditions of Service accessible at http://www.sgs.com/terms_and_conditions.htm. Attention is drawn to the limitation of liability, indemnification and jurisdiction issues defined therein.*

*Any holder of this document is advised that information contained hereon reflects the Company's findings at the time of its intervention only and within the limits of Client's instructions, if any. The Company's sole responsibility is to its Client and this document does not exonerate parties to a transaction from exercising all their rights and obligations under the transaction documents. Any unauthorized alteration, forgery or falsification of the content or appearance of this document is unlawful and offenders may be prosecuted to the fullest extent of the law*

# Analysis Report

January 05, 2017

**PACIFICORP**
FIELD OFFICE
PO BOX 1005
HUNTINGTON UT 84528



| | | | |
|---|---|---|---|
| Client Sample ID: | 11W - 17W SEALS | Sample ID By: | PacifiCorp |
| Date Sampled: | Dec 7, 2016 | Sample Taken By: | CAS |
| Date Received: | Dec 7, 2016 | Time Received: | 1516 |
| Product Description: | WATER | Time Sampled: | 1230 |
| | | Location: | 11W - 17W SEALS |
| | | Mine: | 4 |
| | | Field - pH: | 7.68 pH units |
| | | Field - Conductivity: | 964 UMHOS/CM |
| | | Field - Temperature: | 12.3 DEG. C |

Comments: Dissolved Metals Filtered at Lab; Total Selenium, Silver, & Mercury Analyzed at A.W.A.L.

**SGS Minerals Sample ID: 782-1643204-001**

| TESTS | RESULT | UNIT | METHOD | REPORTING LIMIT | ANALYZED DATE | ANALYZED TIME | ANALYST |
|---|---|---|---|---|---|---|---|
| Hardness, mg equivalent CaCO3/L | 303 | mg/L | SM2340-B | 1 | 2016-12-22 | 18:30:18 | DI |
| Acidity | <5 | mg/L | D1067 | 5 | 2016-12-13 | 13:00:00 | SM |
| Anions | 9.61 | meq/L | SM1030E | 0 | 2016-12-22 | 18:30:18 | DI |
| Balance | -2.87 | % | SM1030E | -10 | 2016-12-22 | 18:30:18 | DI |
| Cations | 9.07 | meq/L | SM1030E | 0 | 2016-12-22 | 18:30:18 | DI |
| Alkalinity, mg CaCO3/L (pH 4.5) | 368 | mg/L | SM2320-B | 5 | 2016-12-09 | 09:30:00 | SM |
| Bicarbonate Alkalinity as CaCO3 | 368 | mg/L | SM2320-B | 5 | 2016-12-09 | 09:30:00 | SM |
| Carbonate Alkalinity as CaCO3 | <5 | mg/L | SM2320-B | 5 | 2016-12-09 | 09:30:00 | SM |
| Nitrogen, Ammonia | 1.6 | mg/L | SM4500-B-D | 0.1 | 2016-12-15 | 00:00:00 | LR |
| pH | 7.49 | | SM4500-H | 0.01 | 2016-12-07 | 17:19:00 | SM |
| pH Temperature | 11.60 | °C | SM4500-H | 0.01 | 2016-12-07 | 17:19:00 | SM |
| Conductivity | 849 | µmhos/cm | SM2510 | 0.1 | 2016-12-08 | 12:30:00 | SM |
| Total Dissolved Solids | 521 | mg/L | SM2540-C | 30 | 2016-12-12 | 13:00:00 | SM |
| Nitrate | 0.11 | mg/L | EPA 300.0 | 0.05 | 2016-12-08 | 23:44:00 | LR |
| Nitrite | <0.05 | mg/L | EPA 300.0 | 0.05 | 2016-12-08 | 23:44:00 | LR |
| Chloride, Cl | 11 | mg/L | EPA 300.0 | 1 | 2016-12-08 | 23:44:00 | LR |
| Sulfate, SO4 | 93 | mg/L | EPA 300.0 | 1 | 2016-12-08 | 23:44:00 | LR |
| Ortho-Phosphate-P | <0.05 | mg/L | EPA 300.0 | 0.05 | 2016-12-08 | 23:44:00 | LR |
| Mercury, Hg - Total | <0.150 | µg/L | EPA 245.1 | 0.15 | 2016-12-15 | 09:08:00 | DI |

**METALS BY ICP**

Lab Supervisor

Domenic Ibanez
Lab Supervisor

SGS North America Inc. | Minerals Services Division
2035 North Airport Road Huntington UT 84528 t (435) 653-2311 f (435)-653-2436 www.sgs.com/minerals

Member of the SGS Group (Société Générale de Surveillance)

*This document is issued by the Company under its General Conditions of Service accessible at http://www.sgs.com/terms_and_conditions.htm. Attention is drawn to the limitation of liability, indemnification and jurisdiction issues defined therein.*

*Any holder of this document is advised that information contained hereon reflects the Company's findings at the time of its intervention only and within the limits of Client's instructions, if any. The Company's sole responsibility is to its Client and this document does not exonerate parties to a transaction from exercising all their rights and obligations under the transaction documents. Any unauthorized alteration, forgery or falsification of the content or appearance of this document is unlawful and offenders may be prosecuted to the fullest extent of the law*

SGS

# Analysis Report

January 05, 2017

**PACIFICORP**
FIELD OFFICE
PO BOX 1005
HUNTINGTON UT 84528



| | | | |
|---|---|---|---|
| Client Sample ID: | 11W - 17W SEALS | Sample ID By: | PacifiCorp |
| Date Sampled: | Dec 7, 2016 | Sample Taken By: | CAS |
| Date Received: | Dec 7, 2016 | Time Received: | 1516 |
| Product Description: | WATER | Time Sampled: | 1230 |
| | | Location: | 11W - 17W SEALS |
| | | Mine: | 4 |
| | | Field - pH: | 7.68 pH units |
| | | Field - Conductivity: | 964 UMHOS/CM |
| | | Field - Temperature: | 12.3 DEG. C |

Comments: Dissolved Metals Filtered at Lab; Total Selenium, Silver, & Mercury Analyzed at A.W.A.L.

**SGS Minerals Sample ID: 782-1643204-001**

| TESTS | RESULT | UNIT | METHOD | REPORTING LIMIT | ANALYZED DATE | ANALYZED TIME | ANALYST |
|---|---|---|---|---|---|---|---|
| **METALS BY ICP (continued)** | | | | | | | |
| Aluminum, Al - Dissolved | <0.03 | mg/L | EPA 200.7 | 0.03 | 2016-12-21 | 08:14:00 | MS |
| Arsenic, As - Total | <0.01 | mg/L | EPA 200.7 | 0.01 | 2016-12-14 | 15:00:00 | MS |
| Arsenic, As - Dissolved | <0.01 | mg/L | EPA 200.7 | 0.01 | 2016-12-21 | 08:14:00 | MS |
| Boron, B - Total | 0.20 | mg/L | EPA 200.7 | 0.01 | 2016-12-14 | 15:00:00 | MS |
| Cadmium, Cd - Total | <0.001 | mg/L | EPA 200.7 | 0.001 | 2016-12-14 | 15:00:00 | MS |
| Cadmium, Cd - Dissolved | <0.001 | mg/L | EPA 200.7 | 0.001 | 2016-12-21 | 08:14:00 | MS |
| Calcium, Ca - Dissolved | 60.18 | mg/L | EPA 200.7 | 0.03 | 2016-12-21 | 08:14:00 | MS |
| Chromium, Cr - Total | 0.002 | mg/L | EPA 200.7 | 0.001 | 2016-12-14 | 15:00:00 | MS |
| Copper, Cu - Total | <0.01 | mg/L | EPA 200.7 | 0.01 | 2016-12-14 | 15:00:00 | MS |
| Copper, Cu - Dissolved | <0.01 | mg/L | EPA 200.7 | 0.01 | 2016-12-21 | 08:14:00 | MS |
| Iron, Fe - Total | 1.36 | mg/L | EPA 200.7 | 0.05 | 2016-12-14 | 15:00:00 | MS |
| Iron, Fe - Dissolved | <0.03 | mg/L | EPA 200.7 | 0.03 | 2016-12-21 | 08:14:00 | MS |
| Lead, Pb - Total | <0.01 | mg/L | EPA 200.7 | 0.01 | 2016-12-14 | 15:00:00 | MS |
| Lead, Pb - Dissolved | <0.01 | mg/L | EPA 200.7 | 0.01 | 2016-12-21 | 08:14:00 | MS |
| Magnesium, Mg - Dissolved | 37.19 | mg/L | EPA 200.7 | 0.01 | 2016-12-21 | 08:14:00 | MS |
| Manganese, Mn - Total | 0.021 | mg/L | EPA 200.7 | 0.002 | 2016-12-14 | 15:00:00 | MS |
| Manganese, Mn - Dissolved | 0.019 | mg/L | EPA 200.7 | 0.002 | 2016-12-21 | 08:14:00 | MS |
| Molybdenum, Mo - Dissolved | 0.008 | mg/L | EPA 200.7 | 0.005 | 2016-12-21 | 08:14:00 | MS |
| Nickel, Ni - Total | 0.035 | mg/L | EPA 200.7 | 0.001 | 2016-12-14 | 15:00:00 | MS |
| Potassium, K - Dissolved | 10.41 | mg/L | EPA 200.7 | 0.14 | 2016-12-21 | 08:14:00 | MS |

Lab Supervisor

Domenic Ibanez
Lab Supervisor



*This document is issued by the Company under its General Conditions of Service accessible at http://www.sgs.com/terms_and_conditions.htm. Attention is drawn to the limitation of liability, indemnification and jurisdiction issues defined therein.*

*Any holder of this document is advised that information contained hereon reflects the Company's findings at the time of its intervention only and within the limits of Client's instructions, if any. The Company's sole responsibility is to its Client and this document does not exonerate parties to a transaction from exercising all their rights and obligations under the transaction documents. Any unauthorized alteration, forgery or falsification of the content or appearance of this document is unlawful and offenders may be prosecuted to the fullest extent of the law*

# Analysis Report

January 05, 2017

**PACIFICORP**
FIELD OFFICE
PO BOX 1005
HUNTINGTON UT 84528



| | | | |
|---|---|---|---|
| Client Sample ID: | 11W - 17W SEALS | Sample ID By: | PacifiCorp |
| Date Sampled: | Dec 7, 2016 | Sample Taken By: | CAS |
| Date Received: | Dec 7, 2016 | Time Received: | 1516 |
| Product Description: | WATER | Time Sampled: | 1230 |
| | | Location: | 11W - 17W SEALS |
| | | Mine: | 4 |
| | | Field - pH: | 7.68 pH units |
| | | Field - Conductivity: | 964 UMHOS/CM |
| | | Field - Temperature: | 12.3 DEG. C |

Comments: Dissolved Metals Filtered at Lab; Total Selenium, Silver, & Mercury Analyzed at A.W.A.L.

**SGS Minerals Sample ID: 782-1643204-001**

| TESTS | RESULT | UNIT | METHOD | REPORTING LIMIT | ANALYZED DATE | ANALYZED TIME | ANALYST |
|---|---|---|---|---|---|---|---|
| **METALS BY ICP (continued)** | | | | | | | |
| Selenium, Se - Total | <0.002 | mg/L | EPA 200.8 | 0.002 | 2016-12-14 | 19:27:00 | DI |
| Silver, Ag - Total | <0.002 | mg/L | EPA 200.8 | 0.002 | 2016-12-14 | 19:27:00 | DI |
| Sodium, Na - Dissolved | 63.09 | mg/L | EPA 200.7 | 0.09 | 2016-12-21 | 08:14:00 | MS |
| Zinc, Zn - Total | <0.004 | mg/L | EPA 200.7 | 0.004 | 2016-12-14 | 15:00:00 | MS |
| Zinc, Zn - Dissolved | <0.004 | mg/L | EPA 200.7 | 0.004 | 2016-12-21 | 08:14:00 | MS |

Lab Supervisor

Domenic Ibanez
Lab Supervisor

SGS North America Inc. | Minerals Services Division
2035 North Airport Road Huntington UT 84528 t (435) 653-2311 f (435)-653-2436 www.sgs.com/minerals

Member of the SGS Group (Société Générale de Surveillance)

*This document is issued by the Company under its General Conditions of Service accessible at http://www.sgs.com/terms_and_conditions.htm. Attention is drawn to the limitation of liability, indemnification and jurisdiction issues defined therein.*

*Any holder of this document is advised that information contained hereon reflects the Company's findings at the time of its intervention only and within the limits of Client's instructions, if any. The Company's sole responsibility is to its Client and this document does not exonerate parties to a transaction from exercising all their rights and obligations under the transaction documents. Any unauthorized alteration, forgery or falsification of the content or appearance of this document is unlawful and offenders may be prosecuted to the fullest extent of the law*

# DEER CREEK MINE

# VOLUME 12

# MILL FORK LEASE

**R645-301-700**

**HYDROLOGY**

# APPENDIX D

**POST MINE CLOSURE HYDROLOGIC ANALYSIS**

- **Deer Creek In-Mine Sealed Area Water Quality Graphs: 2012 - 2016**

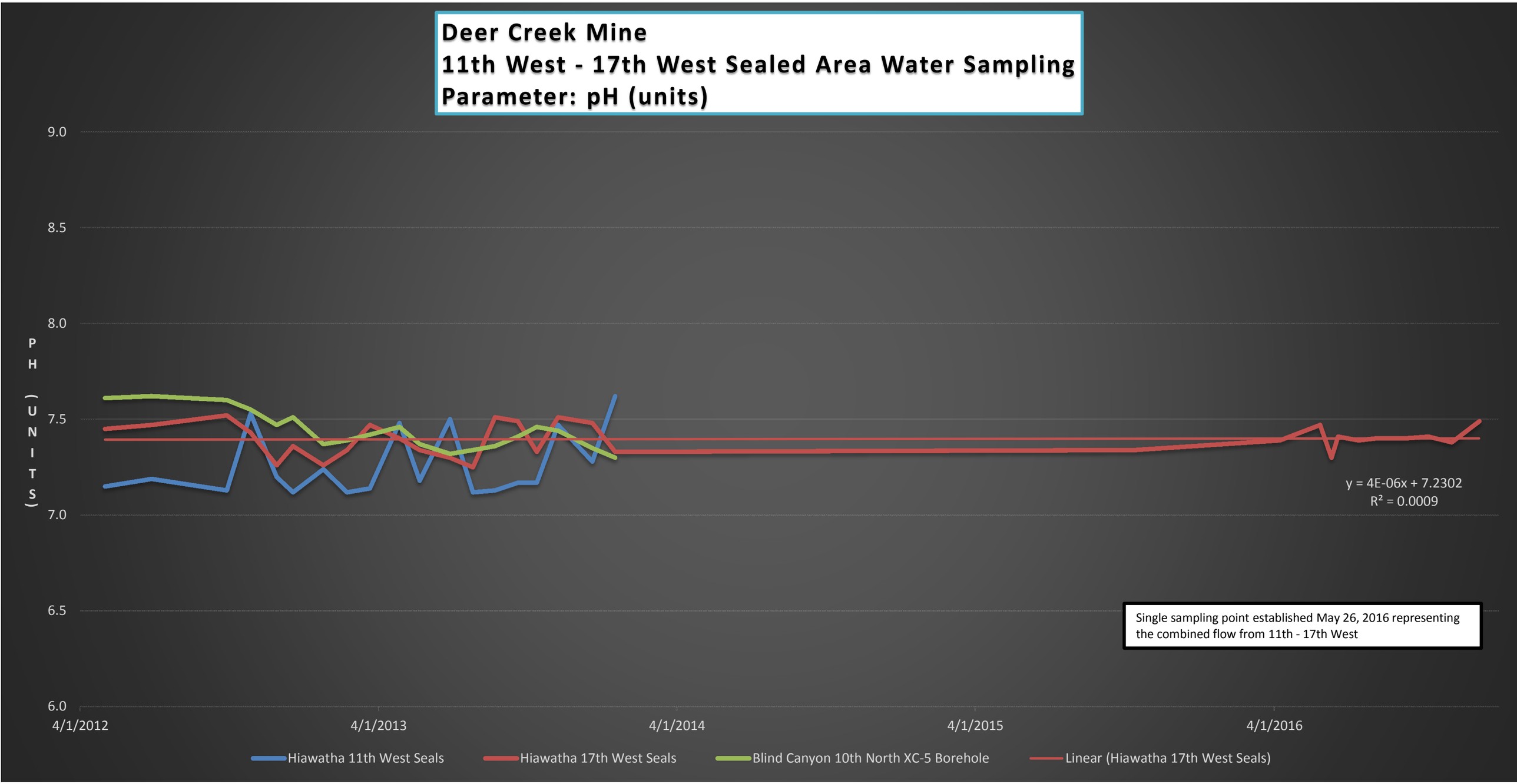
Deer Creek Mine
11th West - 17th West Sealed Area Water Sampling
Parameter: pH (units)
9.0
8.5
8.0
7.5
7.0
6.5
6.0
PH (UNITS)
4/1/2012
4/1/2013
4/1/2014
4/1/2015
4/1/2016
y = 4E-06x + 7.2302
R² = 0.0009
Single sampling point established May 26, 2016 representing the combined flow from 11th - 17th West
Hiawatha 11th West Seals
Hiawatha 17th West Seals
Blind Canyon 10th North XC-5 Borehole
Linear (Hiawatha 17th West Seals)

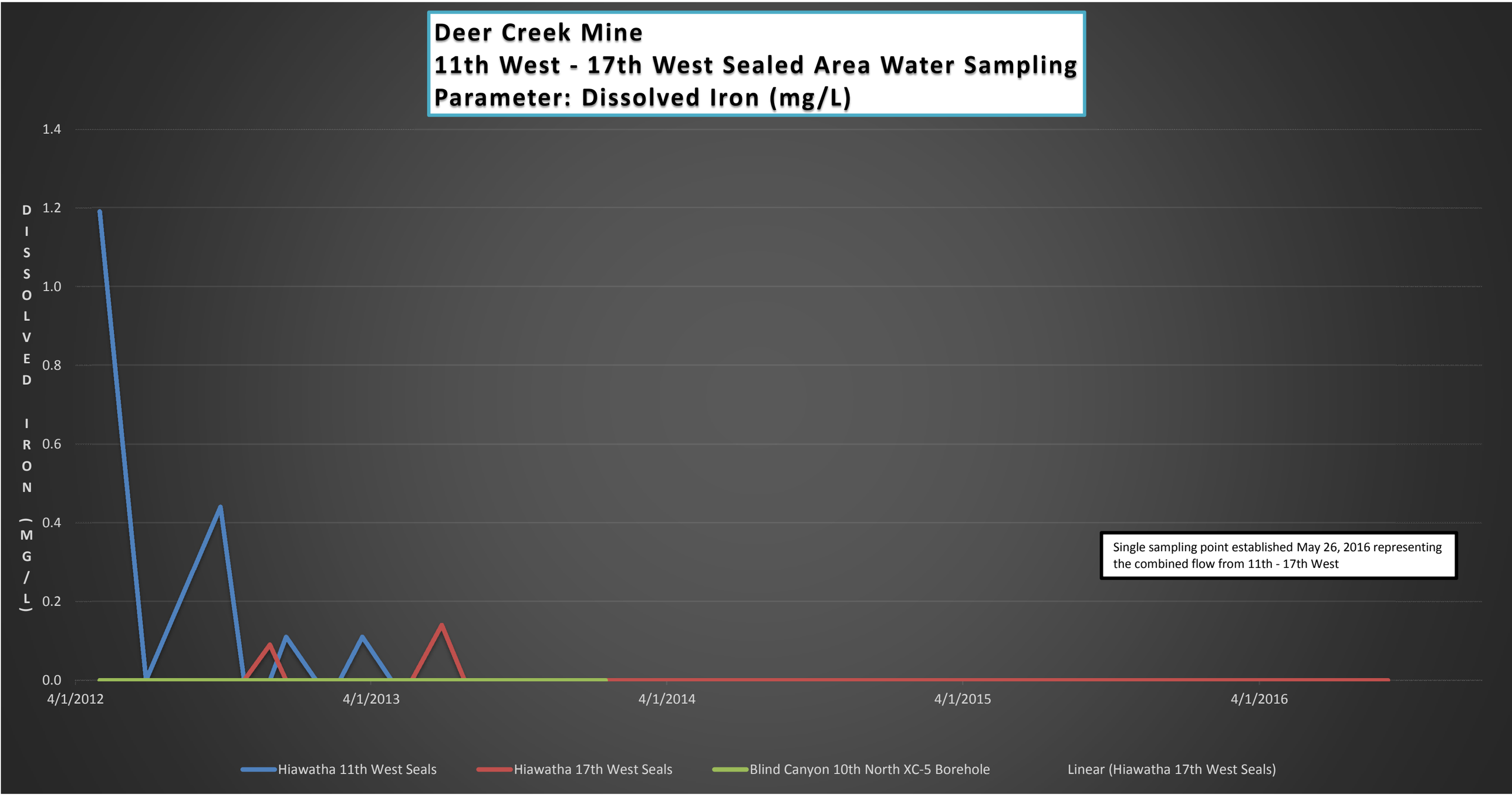
Deer Creek Mine
11th West - 17th West Sealed Area Water Sampling
Parameter: Dissolved Iron (mg/L)
DISSOLVED IRON (MG/L)
1.4
1.2
1.0
0.8
0.6
0.4
0.2
0.0
4/1/2012
4/1/2013
4/1/2014
4/1/2015
4/1/2016
Single sampling point established May 26, 2016 representing the combined flow from 11th - 17th West
Hiawatha 11th West Seals
Hiawatha 17th West Seals
Blind Canyon 10th North XC-5 Borehole
Linear (Hiawatha 17th West Seals)

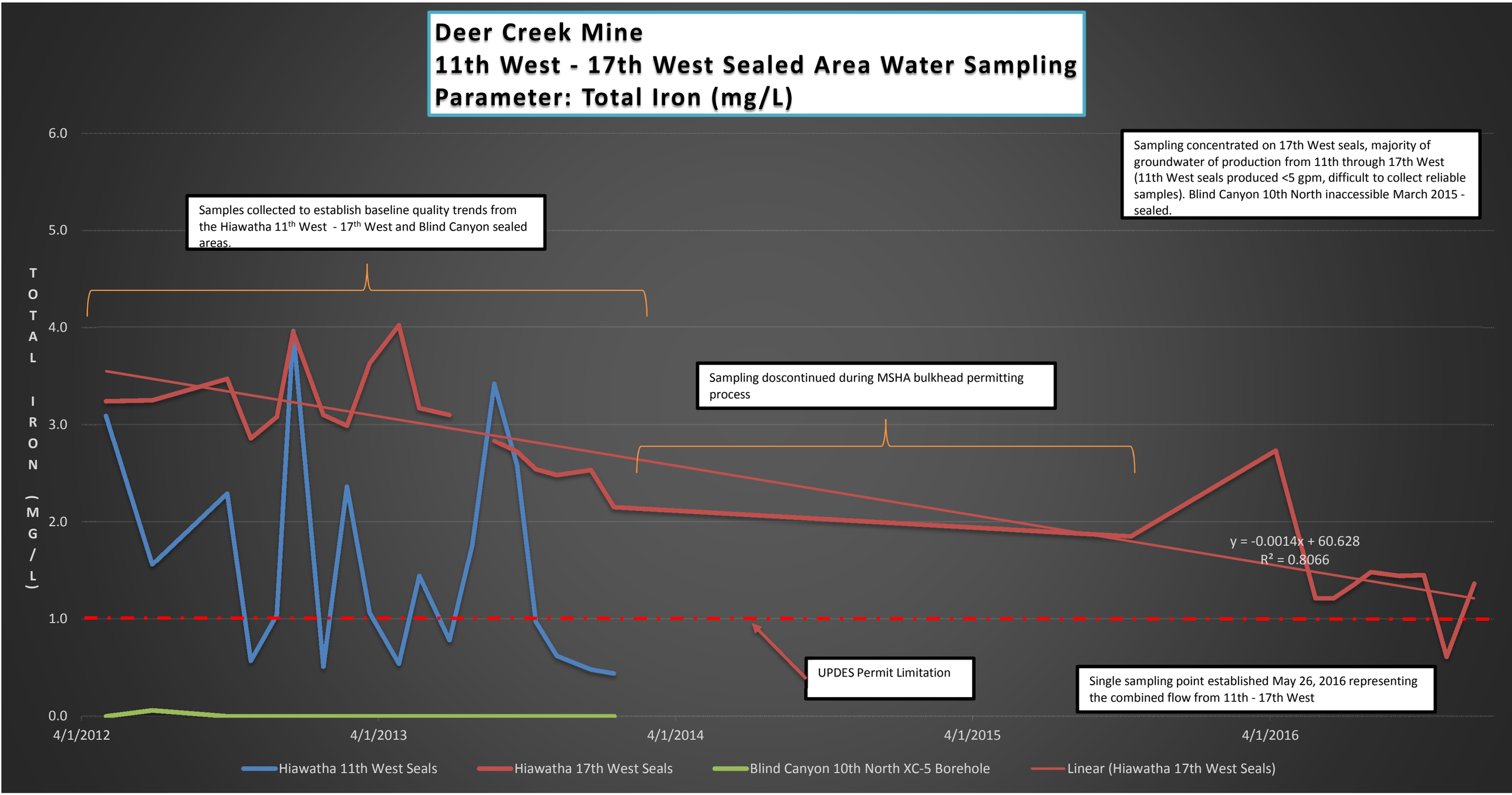
Deer Creek Mine
11th West - 17th West Sealed Area Water Sampling
Parameter: Total Iron (mg/L)
Samples collected to establish baseline quality trends from the Hiawatha 11th West - 17th West and Blind Canyon sealed areas.
Sampling concentrated on 17th West seals, majority of groundwater of production from 11th through 17th West (11th West seals produced <5 gm, difficult to collect reliable samples). Blind Canyon 10th North inaccessible March 2015 - sealed.
Sampling doscontinued during MSHA bulkhead permitting process
y = -0.0014x + 60.628
R² = 0.8066
UPDES Permit Limitation
Single sampling point established May 26, 2016 representing the combined flow from 11th - 17th West
TOTAL IRON (MG/L)
6.0
5.0
4.0
3.0
2.0
1.0
0.0
4/1/2012
4/1/2013
4/1/2014
4/1/2015
4/1/2016
Hiawatha 11th West Seals
Hiawatha 17th West Seals
Blind Canyon 10th North XC-5 Borehole
Linear (Hiawatha 17th West Seals)

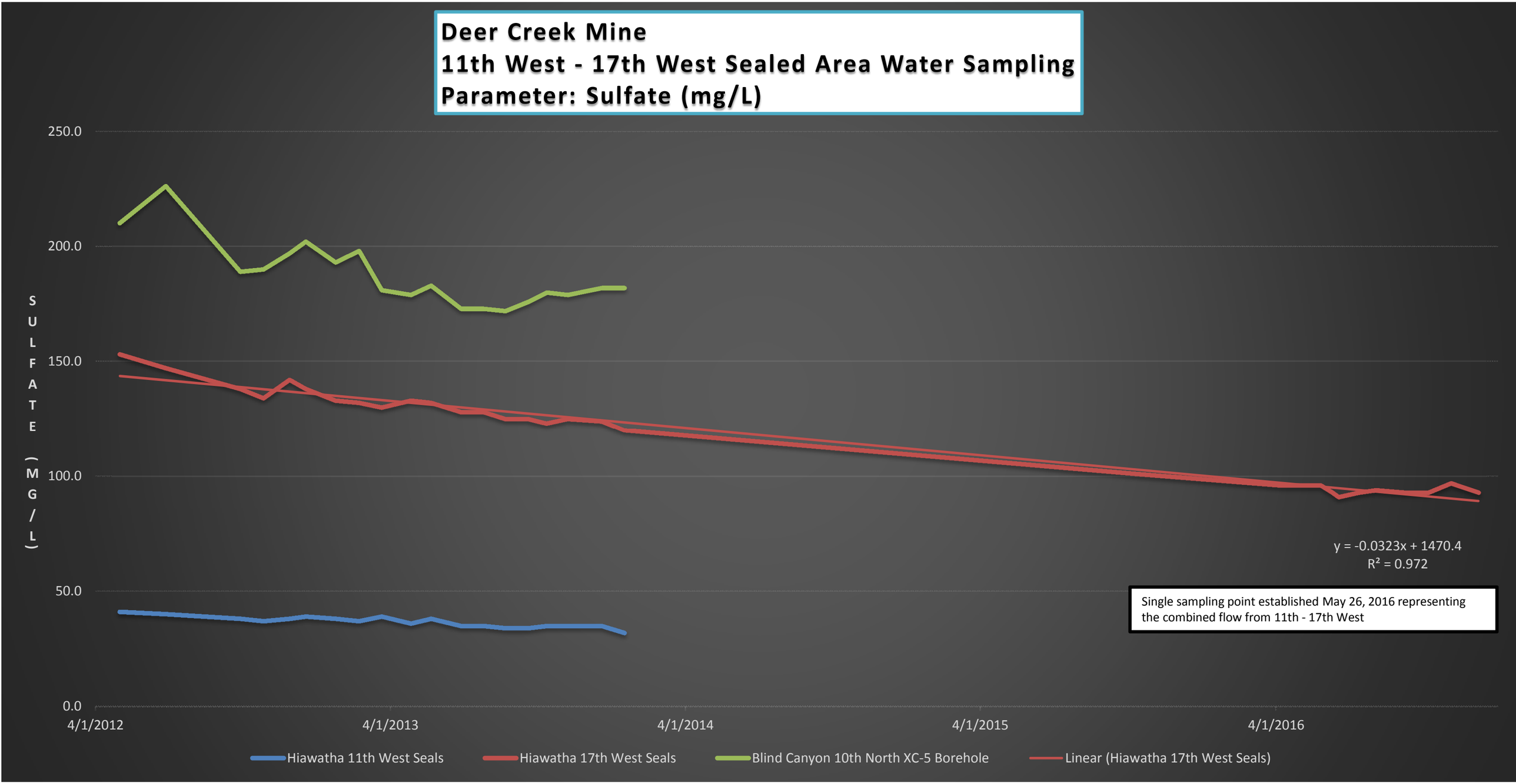
Deer Creek Mine
11th West - 17th West Sealed Area Water Sampling
Parameter: Sulfate (mg/L)
SULFATE (MG/L)
250.0
200.0
150.0
100.0
50.0
0.0
4/1/2012
4/1/2013
4/1/2014
4/1/2015
4/1/2016
y = -0.0323x + 1470.4
R² = 0.972
Single sampling point established May 26, 2016 representing the combined flow from 11th - 17th West
Hiawatha 11th West Seals
Hiawatha 17th West Seals
Blind Canyon 10th North XC-5 Borehole
Linear (Hiawatha 17th West Seals)

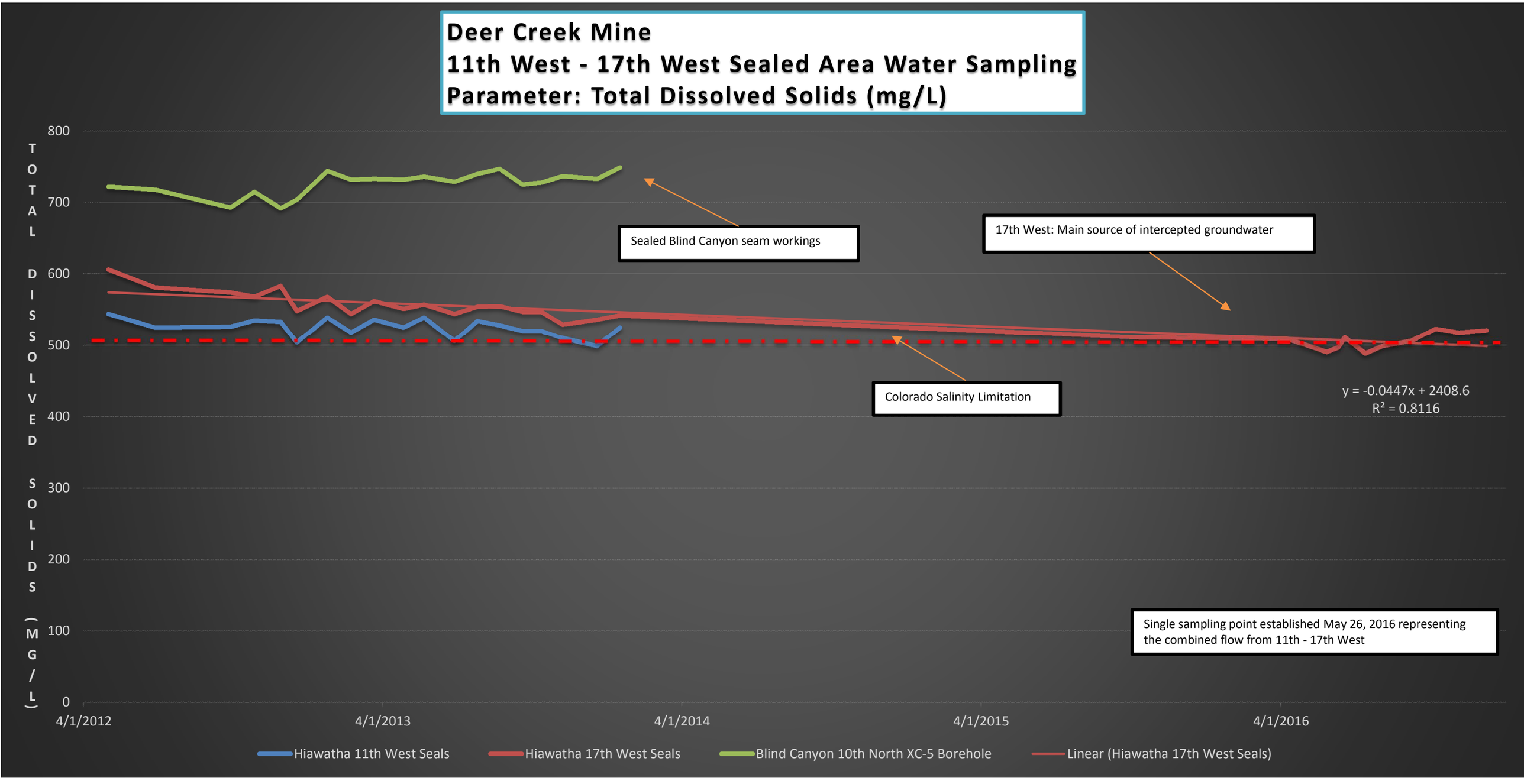
Deer Creek Mine
11th West - 17th West Sealed Area Water Sampling
Parameter: Total Dissolved Solids (mg/L)
TOTAL DISSOLVED SOLIDS (MG/L)
800
700
600
500
400
300
200
100
0
4/1/2012
4/1/2013
4/1/2014
4/1/2015
4/1/2016
Sealed Blind Canyon seam workings
17th West: Main source of intercepted groundwater
Colorado Salinity Limitation
y = -0.0447x + 2408.6
R² = 0.8116
Single sampling point established May 26, 2016 representing the combined flow from 11th - 17th West
Hiawatha 11th West Seals
Hiawatha 17th West Seals
Blind Canyon 10th North XC-5 Borehole
Linear (Hiawatha 17th West Seals)

# DEER CREEK MINE

# VOLUME 12

# MILL FORK LEASE

**R645-301-700**

**HYDROLOGY**

# APPENDIX D

**POST MINE CLOSURE HYDROLOGIC ANALYSIS**

- **Huntington Creek HCC01 Water Quality Analysis 1990 – 2016**

**Huntington Creek**

**Sampling Location HCC01 (west of Deer Creek Access Road/Huntington Plant bridge)**

| Date | IRON_TOT mg/L | TDS mg/L | SUSPENDED mg/L | PH units |
|---|---|---|---|---|
| 19901206 | 0.04 | 172 | 1 | 8.2 |
| 19901207 | 0.02 | 201 | 1 | 8.25 |
| 19901208 | 0.02 | 310 | 3 | 8.35 |
| 19901209 | 0.02 | 204 | 1 | 8.35 |
| 19901210 | 0.02 | 300 | 2 | 8.5 |
| 19901211 | 0.02 | 246 | 31 | 8.2 |
| 19901212 | 0.08 | 243 | 2 | 8.3 |
| 19901213 | | 235 | 5 | 8.2 |
| 19901214 | | 235 | 4 | 8.3 |
| 19901218 | | 268 | 1 | 8.4 |
| 19901219 | | 302 | 1 | 8.28 |
| 19901220 | | 264 | 1 | 8.3 |
| 19901221 | | 191 | 2 | 8.15 |
| 19901225 | | 266 | 1 | 8.1 |
| 19901226 | | 282 | 7 | 8.15 |
| 19910102 | | 369 | 6 | 8.3 |
| 19910204 | 0.04 | 241 | 4 | 8.4 |
| 19910219 | 0.02 | 278 | 7 | 8.3 |
| 19910225 | | 296 | 4 | 8.1 |
| 19910305 | 0.22 | 264 | 9 | 7.9 |
| 19910408 | 0.02 | 277 | 15 | 8.4 |
| 19910424 | 0.24 | 227 | 28 | 7.6 |
| 19910514 | 0.17 | 204 | 21 | 8.3 |
| 19910611 | 0.33 | 170 | 85 | 8.4 |
| 19910718 | 0.08 | 270 | 15 | 8.4 |
| 19910819 | 0.2 | 208 | 31 | 8.2 |
| 19910910 | 0.17 | 181 | 23 | 8.2 |
| 19911021 | 0.11 | 178 | 10 | 7.8 |
| 19911113 | | 256 | | 8.1 |
| 19911212 | 0.17 | 231 | 8 | 7.1 |
| 19920106 | 0.08 | 247 | 7 | 8.01 |
| 19920217 | 0.01 | 259 | 3 | 8.38 |
| 19920318 | 0.01 | 196 | 4 | 8.43 |
| 19920407 | 0.15 | 206 | 25 | 8.9 |
| 19920520 | 0.11 | 175 | 19 | 8.65 |
| 19920625 | 0.25 | 185 | 9 | 8.83 |
| 19920720 | 0.07 | 134 | 8 | 8.83 |
| 19920820 | 0.19 | 177 | 14 | 8.9 |
| 19920928 | 0.05 | 247 | 4 | 8.7 |
| 19921023 | 0.01 | 243 | 3 | 8.61 |
| 19921125 | 0.09 | 269 | 1 | 8.16 |
| 19921217 | 0.05 | 179 | 15 | 8.61 |
| 19930115 | | 252 | 6 | 7.95 |
| 19930226 | | 266 | 30 | 8.72 |
| 19930317 | | 330 | 19 | 8.43 |
| 19930422 | 1.01 | 264 | 40 | 8.85 |
| 19930513 | 1.95 | 190 | 95 | 8.38 |

**Huntington Creek**

**Sampling Location HCC01 (west of Deer Creek Access Road/Huntington Plant bridge)**

| Date | IRON_TOT mg/L | TDS mg/L | SUSPENDED mg/L | PH units |
|---|---|---|---|---|
| 19930611 | 0.17 | 194 | 17 | 8.63 |
| 19930716 | 0.17 | 181 | 12 | 8.71 |
| 19930823 | 0.1 | 200 | 25 | 8.5 |
| 19930920 | 0.41 | 164 | 22 | 7.63 |
| 19931022 | 0.2 | 246 | 10 | 8.2 |
| 19931122 | 0.3 | 228 | 9 | 8.06 |
| 19940120 | 0.4 | 278 | 12 | 8.69 |
| 19940218 | 0.2 | 250 | 27 | 8.36 |
| 19940323 | 0.2 | 280 | 15 | 8.41 |
| 19940425 | 0.3 | 190 | 14 | 8.53 |
| 19940524 | 0.6 | 190 | 40 | 8.56 |
| 19940621 | 0.2 | 190 | 13 | 8.48 |
| 19940714 | 0.3 | 170 | 22 | 8.88 |
| 19940822 | 0.2 | 170 | 9 | 8.84 |
| 19940913 | 0.3 | 180 | 13 | 8.8 |
| 19941031 | 0.2 | 240 | 4 | 8.74 |
| 19941128 | 0.2 | 280 | 8 | 8.56 |
| 19941219 | 0.2 | 270 | 14 | 8.75 |
| 19950329 | 0.2 | 210 | 10 | 8.57 |
| 19950630 | 1.4 | 170 | 70 | 8.1 |
| 19950918 | 0.6 | 190 | 35 | 8.76 |
| 19951214 | 0.1 | 260 | 5 | 8.81 |
| 19960329 | 0.08 | 248 | 5 | 8.38 |
| 19960612 | 0.6 | 184 | 32 | 8.54 |
| 19960911 | 0.5 | 157 | 15 | 8.42 |
| 19961211 | | 272 | | 8.44 |
| 19970319 | 0.3 | 170 | 17 | 8.4 |
| 19970624 | 0.1 | 190 | 17 | 8.5 |
| 19970916 | 13.3 | 230 | 504 | 8.18 |
| 19971204 | | 250 | | 8.32 |
| 19980311 | 0.2 | 275 | 12 | 8.16 |
| 19980609 | 0.5 | 209 | 100 | 8.34 |
| 19980915 | 0.2 | 214 | 16 | 8.65 |
| 19981202 | | 261 | 8 | 7.32 |
| 19990304 | 0.1 | 286 | 7 | 8.43 |
| 19990618 | 0.9 | 179 | 111 | 8.49 |
| 19990914 | 0.3 | 186 | 21 | 8.05 |
| 19991209 | | 305 | 9 | 8.39 |
| 20000310 | | 285 | | 8.53 |
| 20000627 | 0.2 | 168 | 19 | 8.46 |
| 20000925 | 0.2 | 186 | 27 | 8.28 |
| 20001205 | | 276 | 10 | 8.29 |
| 20010314 | 0.1 | 290 | 11 | 8.43 |
| 20010627 | 0.3 | 196 | 29 | 8.61 |
| 20010913 | 0.5 | 202 | 37 | 8.61 |
| 20011213 | | 283 | 7 | 8.44 |
| 20020320 | 0.4 | 276 | 58 | 8.42 |

**Huntington Creek**

**Sampling Location HCC01 (west of Deer Creek Access Road/Huntington Plant bridge)**

| Date | IRON_TOT mg/L | TDS mg/L | SUSPENDED mg/L | PH units |
|---|---|---|---|---|
| 20020626 | 0.2 | 153 | 17 | 8.58 |
| 20020919 | 0.6 | 268 | 32 | 8.44 |
| 20021205 | 2.1 | 221 | 143 | 8.4 |
| 20030313 | 0.126 | 321 | 8 | 8.42 |
| 20030626 | 0.239 | 248 | 17 | 8.56 |
| 20030917 | 0.108 | 231 | 6 | 8.44 |
| 20031209 | 0.7 | 200 | 14 | 8.25 |
| 20040309 | 0.276 | 287 | 18 | 8.41 |
| 20040604 | 0.22 | 259 | 37 | 8.47 |
| 20040910 | 0.25 | 153 | 13 | 8.63 |
| 20041214 | 0.12 | 249 | | 8.41 |
| 20050321 | 0.1 | 366 | | 8.45 |
| 20050622 | 0.39 | 225 | 38 | 8.29 |
| 20050923 | 0.49 | 204 | 31 | 8.35 |
| 20051213 | 0.08 | 323 | 14 | 8.28 |
| 20060314 | 0.18 | 467 | 12 | 8.31 |
| 20060622 | 0.27 | 245 | 16 | 8.43 |
| 20060928 | 8.77 | 209 | 969 | 8.03 |
| 20061207 | 0.12 | 302 | 8 | 7.99 |
| 20070327 | 0.3 | 291 | 13 | 8.23 |
| 20070629 | 0.25 | 216 | 13 | 8.47 |
| 20070920 | 0.22 | 193 | 19 | 8.37 |
| 20071205 | 0.13 | 301 | | 8.51 |
| 20080324 | 0.24 | 399 | 11 | 8.34 |
| 20080618 | 1.05 | 229 | | 8.6 |
| 20080923 | 0.15 | 250 | 6 | 8.58 |
| 20081204 | 0.12 | 306 | 0 | 8.51 |
| 20090324 | 0.13 | 341 | 10 | 8.39 |
| 20090618 | 0.27 | 233 | 13 | 8.63 |
| 20090909 | 0.17 | 219 | 13 | 8.55 |
| 20091202 | 0.12 | 318 | 5 | 8.58 |
| 20100317 | 0.15 | 320 | 42 | 8.5 |
| 20100609 | 1.43 | 188 | 128 | 8.47 |
| 20100920 | 0.23 | 196 | 21 | 8.61 |
| 20101207 | 0.09 | 322 | 9 | 8.52 |
| 20110322 | 0.13 | 265 | 13 | 8.61 |
| 20110620 | 1.19 | 183 | 85 | 8.5 |
| 20110907 | 0.14 | 194 | 8 | 8.56 |
| 20111206 | 0.08 | 329 | 8 | 8.48 |
| 20120313 | 0.26 | 279 | 24 | 8.47 |
| 20120612 | 0.27 | 210 | 24 | 8.58 |
| 20120910 | 1.03 | 241 | 111 | 8.57 |
| 20121204 | 0.12 | 326 | 6 | 8.42 |
| 20130312 | 0.29 | 307 | 23 | 8.44 |
| 20130606 | 0.92 | 218 | 84 | 8.58 |
| 20130906 | 1.77 | 203 | 161 | 8.58 |
| 20131203 | 0.23 | 284 | 13 | 8.5 |

**Huntington Creek**

**Sampling Location HCC01 (west of Deer Creek Access Road/Huntington Plant bridge)**

| Date | IRON_TOT mg/L | TDS mg/L | SUSPENDED mg/L | PH units |
|---|---|---|---|---|
| 20140317 | 0.5 | 316 | 39 | 8.36 |
| 20140605 | 0.41 | 223 | 108 | 8.53 |
| 20140903 | 0.3 | 250 | 76 | 8.57 |
| 20141209 | 0.22 | 365 | 23 | 8.53 |
| 20150311 | 0.52 | 319 | 32 | 8.4 |
| 20150603 | 1.3 | 249 | 323 | 8.52 |
| 20150916 | 0.38 | 200 | 47 | 8.33 |
| 20151210 | 0.15 | 327 | 0 | 8.25 |
| 20160309 | 0.16 | 298 | 8 | 8.32 |

| | IRON_TOT mg/L | TDS mg/L | SUSPENDED mg/L | PH units |
|---|---|---|---|---|
| Average | 0.48 | 244 | 35.4 | 8.40 |
| Maximum | 13.3 | 467 | 969 | 8.9 |
| Minimum | 0.01 | 134 | 0 | 7.1 |

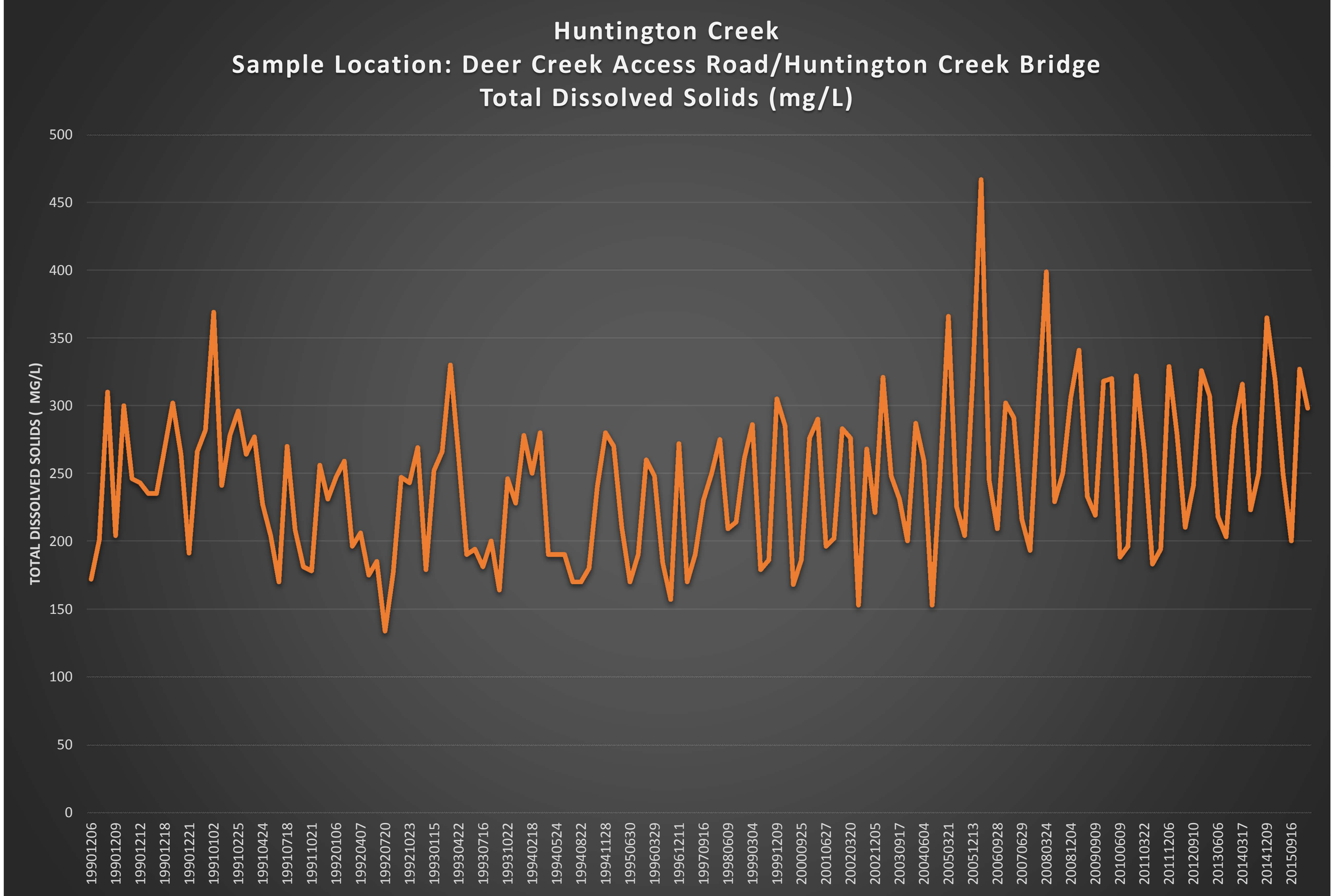
Huntington Creek
Sample Location: Deer Creek Access Road/Huntington Creek Bridge
Total Dissolved Solids (mg/L)
TOTAL DISSOLVED SOLIDS ( MG/L)
500
450
400
350
300
250
200
150
100
50
0
19901206
19901209
19901212
19901218
19901221
19910102
19910225
19910424
19910718
19911021
19920106
19920407
19920720
19921023
19930115
19930422
19930716
19931022
19940218
19940524
19940822
19941128
19950630
19960329
19961211
19970916
19980609
19990304
19991209
20000925
20010627
20020320
20021205
20030917
20040604
20050321
20051213
20060928
20070629
20080324
20081204
20090909
20100609
20110322
20111206
20120910
20130606
20140317
20141209
20150916

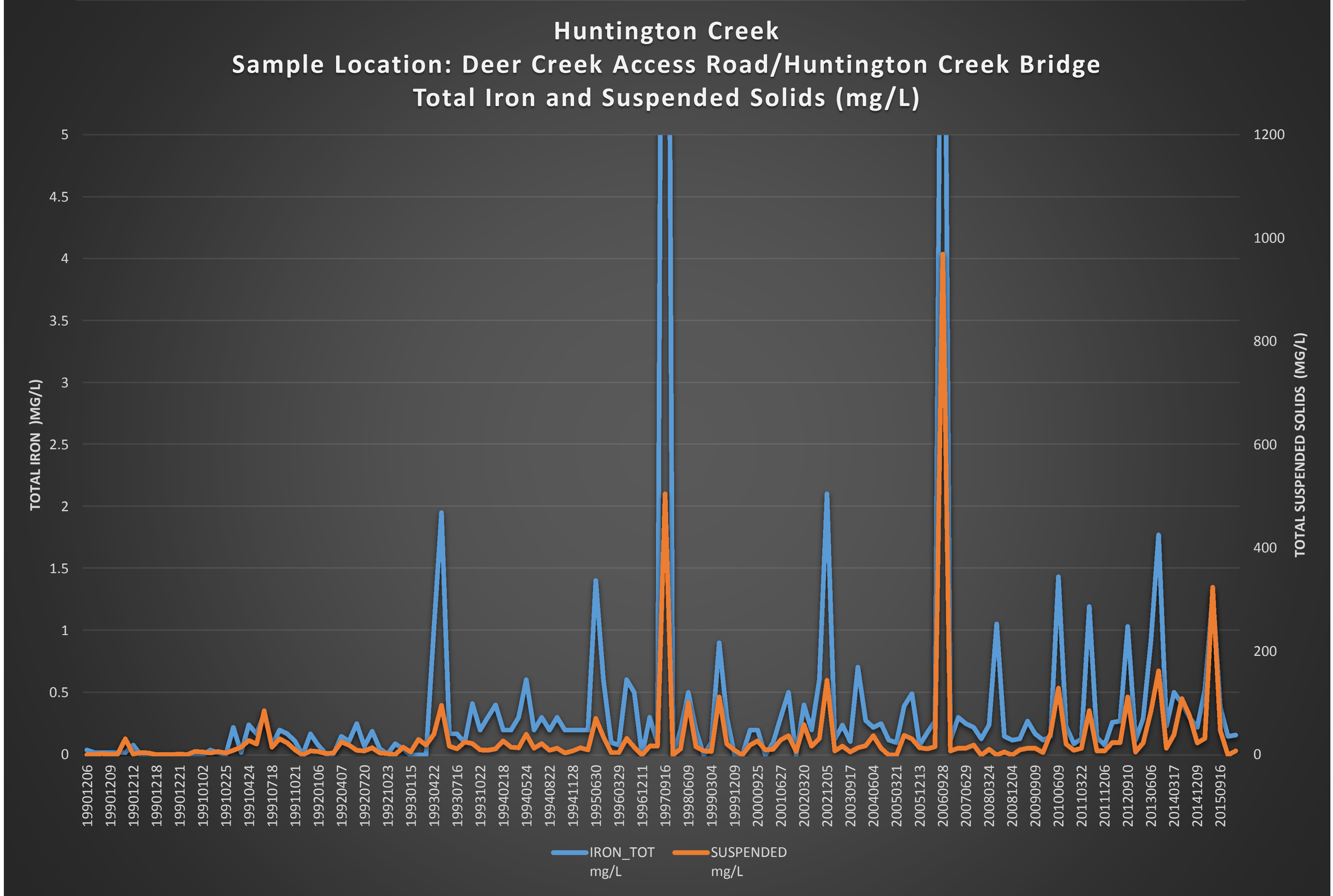
Huntington Creek
Sample Location: Deer Creek Access Road/Huntington Creek Bridge
Total Iron and Suspended Solids (mg/L)
TOTAL IRON )MG/L)
TOTAL SUSPENDED SOLIDS (MG/L)
5
4.5
4
3.5
3
2.5
2
1.5
1
0.5
0
1200
1000
800
600
400
200
0
19901206
19901209
19901212
19901218
19901221
19910102
19910225
19910424
19910718
19911021
19920106
19920407
19920720
19921023
19930115
19930422
19930716
19931022
19940218
19940524
19940822
19941128
19950630
19960329
19961211
19970916
19980609
19990304
19991209
20000925
20010627
20020320
20021205
20030917
20040604
20050321
20051213
20060928
20070629
20080324
20081204
20090909
20100609
20110322
20111206
20120910
20130606
20140317
20141209
20150916
IRON_TOT mg/L
SUSPENDED mg/L

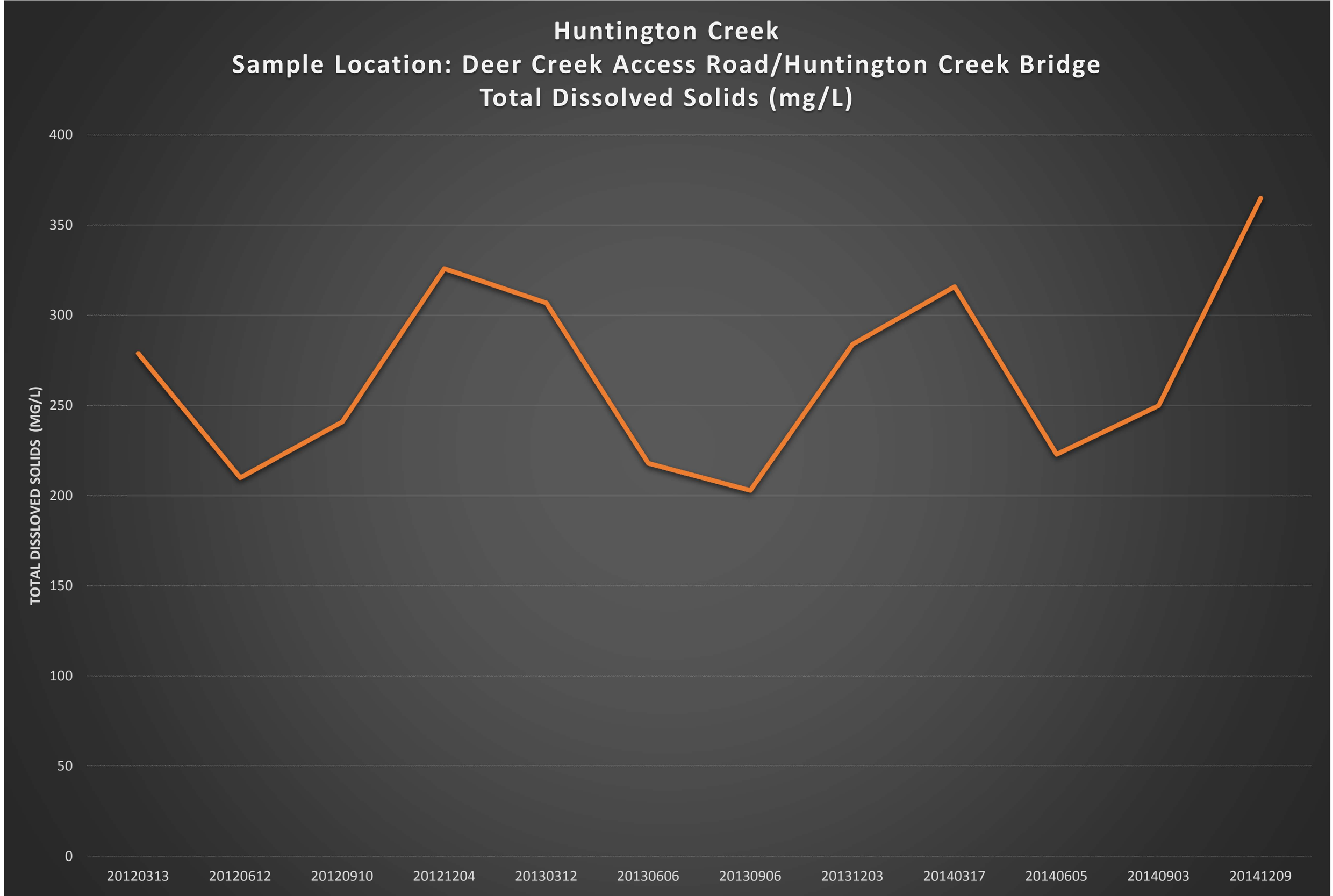
Huntington Creek
Sample Location: Deer Creek Access Road/Huntington Creek Bridge
Total Dissolved Solids (mg/L)
TOTAL DISSLOVED SOLIDS (MG/L)
400
350
300
250
200
150
100
50
0
20120313
20120612
20120910
20121204
20130312
20130606
20130906
20131203
20140317
20140605
20140903
20141209

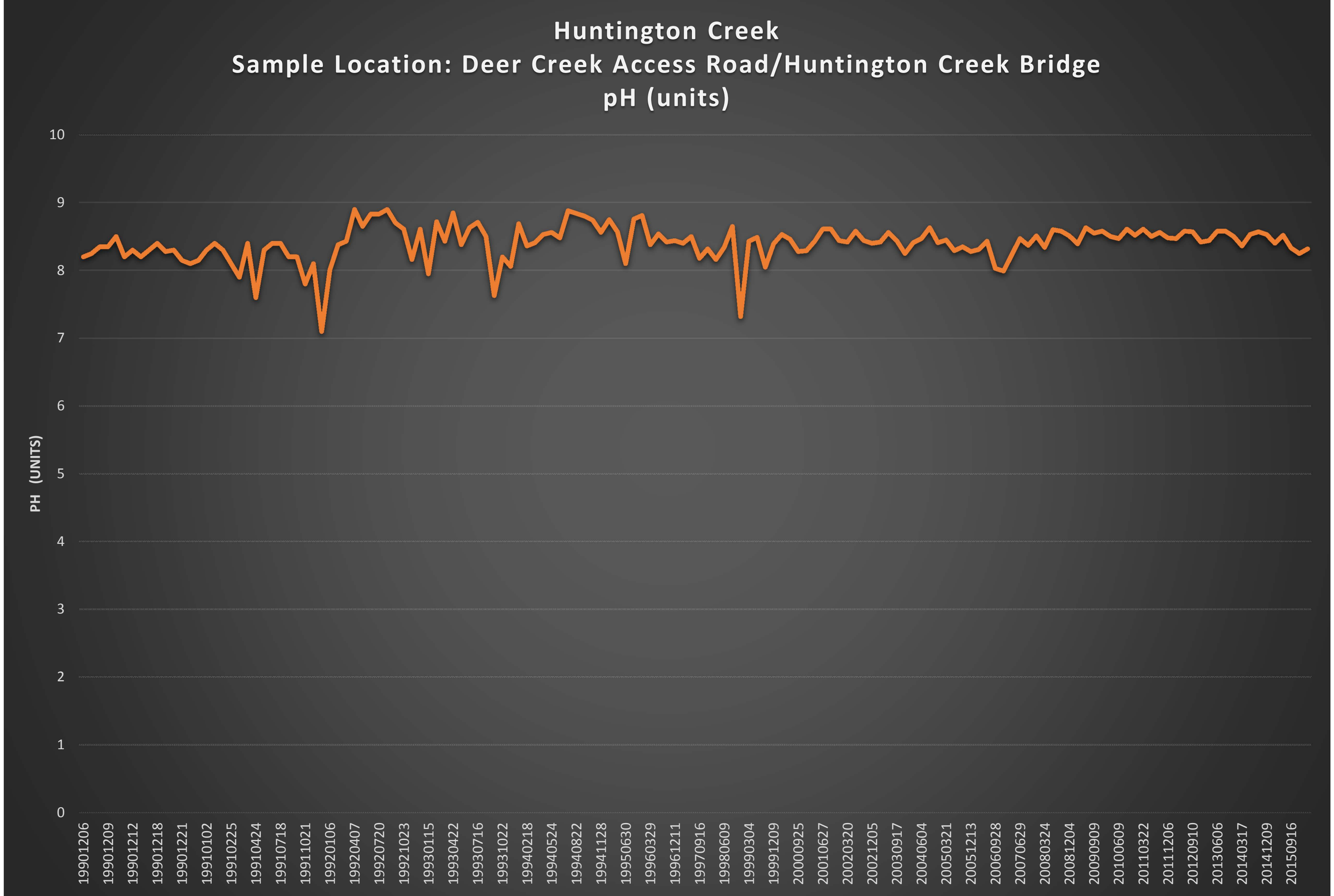
Huntington Creek
Sample Location: Deer Creek Access Road/Huntington Creek Bridge
pH (units)
PH (UNITS)
10
9
8
7
6
5
4
3
2
1
0
19901206
19901209
19901212
19901218
19901221
19910102
19910225
19910424
19910718
19911021
19920106
19920407
19920720
19921023
19930115
19930422
19930716
19931022
19940218
19940524
19940822
19941128
19950630
19960329
19961211
19970916
19980609
19990304
19991209
20000925
20010627
20020320
20021205
20030917
20040604
20050321
20051213
20060928
20070629
20080324
20081204
20090909
20100609
20110322
20111206
20120910
20130606
20140317
20141209
20150916

# DEER CREEK MINE

# VOLUME 12

# MILL FORK LEASE

**R645-301-700**

**HYDROLOGY**

# APPENDIX D

**POST MINE CLOSURE HYDROLOGIC ANALYSIS**

- **Sierra Club/HEAL Utah Objection Response December 21, 2016**

## Subject: NEPA Objection Document from Sierra Club and HEAL Utah – Summarized with Responses from PacifiCorp

In order to meet applicable mine closure requirements, PacifiCorp must manage the groundwater that naturally will build up in the Deer Creek Mine during its closure process. PacifiCorp has developed the most effective way to accomplish this task by taking advantage of ongoing water needs at the nearby Huntington power plant. Routing mine water to the power plant requires a pipeline, the installation of which across Forest Service land is the purpose for the current NEPA action. The mine water will be combined with other water sources (primarily Huntington Creek) in a lined pond at the plant. This combined water mostly will be consumed during normal plant operations. In fact, only about 3% of the combined water from all sources – including the mine water – will not be consumed and will be routed to the irrigation pond at the plant for management in accordance with the plant's permit requirements. Sierra Club/HEAL Utah attempt to twist these simple and straightforward facts into something they are not.

To do so, Sierra Club/Heal Utah base their objections on inaccurate and misleading statements and assumptions as detailed below. In addition, the Sierra Club/ HEAL Utah rely on outdated documents and data. Further, a closer look of the Sierra Club/HEAL's objections shows that their concerns are not whether the Forest Service complied with the National Environmental Policy Act in approving the pipeline, but whether the water management system at the Huntington Plant is environmentally sound. State regulatory processes govern these water management practices, not NEPA, and the Sierra Club/HEAL is currently litigating those issues in federal court.

PacifiCorp has been working diligently since December 2014 to close the Deer Creek Mine in a compliant and environmentally sound manner. PacifiCorp's commitment to protecting the hydrologic regime during this mine closure is unprecedented in the coal mine industry. Repeated throughout their objections, Sierra Club/Heal Utah misrepresent the hydrology of the Deer Creek Mine, mischaracterizing the mine drain water as highly polluted and as "acid mine drainage." Data was presented in the EA documenting the characteristics of the mine water as good quality and that it is impossible for this hydrologic system to produce water that is acidic.

The following are excerpts from the objection along with PacifiCorp's responses.

Sierra Club/HEAL Utah Objections:

**<u>Introductory Section:</u>**

Sierra Club/HEAL Utah Objections: Page 1:

"In an effort to protect water quality on federal lands, the FS has approved a project that will pipe 315 million gallons/year of mine drainage from federal lands to a downstream private property for <u>disposal in unlined ponds and land application sites immediately adjacent to Huntington Creek."</u>

(Underline added for emphasis)

***PacifiCorp Response #1:***

*Sierra Club/HEAL Utah's statement that the mine drainage will be disposed of in unlined ponds and land application sites is incorrect and misleading.*

- *PacifiCorp proposes to divert mine water drainage from the Deer Creek Mine to the Huntington Plant settling pond (also referred to as the Raw Water Pond). The settling pond, including its liner, was designed and engineered by Sterns Roger Corporation and approved for construction January 27, 1972.*
    - *Settling Pond Construction Details*
        - *Dead Storage Capacity 80.01 acre feet*
        - *Live Storage Capacity 256.43 acre feet*
        - *Pond liner*
            - *Thickness 3.0'*
                - *Compacted clay/silty soils compacted to 98% density (ASTM D1557-70)*
- *As indicated in the professional engineer certified construction drawing the settling pond includes a compacted clay liner three feet in thickness.*
- *The Huntington Plant's 2016 Groundwater Permit renewal application states that the pond has a clay liner.*
- *The second part of the statement indicating that PacifiCorp intends to divert the mine water for use in land application is incorrect. Mine water drainage will be diverted from the mine directly to the Raw Water Pond for use in the Power Plant operations. No physical connection exists to allow the mine water to be diverted directly for use in t land application practices*

Sierra Club/HEAL Utah Objections: Page 2:

"The Public Comment Package and the EA largely ignore the fate of the wastewater once it is disposed of at the Huntington Power Plant."

***PacifiCorp Response #2:***

*At the heart of this objection is the Sierra Club's faulty assumption that mine water will be discharged at the plant using the land application systems currently in place. This is not the case. The EA and corresponding references (Plan-of-Development – POD) outline the purpose and need of the mine water drain line. The POD expressly and clearly explains the final disposition of the mine drain water for use in power plant operations (POD page 6). As explained later in this response, 97 percent of the water from the Raw Water Pond will be consumed by plant operations. Because the Raw Water Pond contains other sources of water*

*(storm water from the lands surrounding the pond and Huntington river diversion), mine water will make up only a small fraction of the remaining three percent of total water.*

Sierra Club/HEAL Utah Objections: Page 2&3:

"In addition, the FS denied the Objectors the right to review and comment on its 197-page Environmental Assessment. Instead, the only public comment opportunity was on the FS's 6-page Public Comment Package, which was nothing more than a general scoping announcement."

"The FS's proposed project will harm Objectors and their members. As described below, the FS's failure to comply with the mandatory public involvement requirements of NEPA has denied the Objectors and their members a meaningful opportunity to comment on the environmental analysis for this project and the range of alternatives."

***PacifiCorp Response #3:***

*Sierra Club/Heal asserts without providing any supporting data that the drain water pipeline will harm the Objectors. Sierra Club/Heal Utah again misstates that the BLM and the USFS did not comply with the NEPA and CEQ regulations. BLM and USFS fully complied with the applicable laws, regulations and guidelines, including those pertaining to initial scoping and public notices, including the Council of Environmental Quality (CEQ) regulations. Federal law does not require the issuance of a "Draft EA" for public comment, or the opportunity for public comment on a final EA NEPA and its implementing CEQ regulations provide in general terms that agencies "shall involve environmental agencies, applicants, and the public, to the extent practicable, in preparing" EAs. 40 C.F.R. § 1501.4(b); see Sierra Club v. Hodel, 848 F.2d 1068, 1094 (10th Cir. 1988) (summarizing CEQ requirements for public participation related to EAs and FONSIs).*

*When an agency prepares an EA instead of an EIS, however, it is NOT required to make a draft EA available to the public for comment before making a final decision. Greater Yellowstone Coal. v. Flowers, 359 F.3d 1257, 1279 (10th Cir. 2004) (stating that "NEPA's public involvement requirements are not as well defined when an agency prepares only an EA and not an EIS" and rejecting argument that agency acted arbitrarily by failing to make EA and other documents available to the public before issuing a final decision); see Fund for Animals, Inc. v. Rice, 85 F.3d 535, 549 (11th Cir. 1996) ("[T]here is no legal requirement that an Environmental Assessment be circulated publicly and, in fact, they rarely are." (emphasis in original)); Theodore Roosevelt Conservation P'ship v. Salazar, 616 F.3d 497, 518-20 (D.C. Cir. 2010) (finding no violation of § 1501.4(b) despite failure to solicit comments on draft EA); Bering Strait Citizens for Responsible Res. Dev. v. U.S. Army Corps of Eng'rs, 524 F.3d 938 (9th Cir. 2008) (rejecting argument that public circulation and comment on draft EA is required in every case under NEPA and noting that "conclusion is consistent with the views of other circuits, which uniformly have not insisted on the circulation of a draft EA."); Pogliani v. U.S. Army Corps of Eng'rs, 306 F.3d 1235, 1238-39 (2d Cir. 2002) (refusing to require agency to provide opportunity for public comment on draft EA and FONSI where such opportunity was not required by agencies' regulations implementing NEPA); Como-Falcon Cmty Coal., Inc. v. U.S. Dept. of Labor, 609 F.2d 342, 345 (8th Cir. 1979) (holding there is no statutory requirement for*

*an agency to provide an opportunity for particular kind of method for public input and refusing to "by judicial decision legislate such a requirement into [NEPA]"); Alliance to Protect Nantucket Sound, Inc. v. U.S. Dept. of Army, 398 F.3d 105, 115-16 (1st Cir. 2005) (holding that nothing in the CEQ regulations required circulation of a draft EA for public comment, except under certain "limited circumstances").*[1]

*As reflected above, and as summarized by one court, "the vast majority of circuits addressing this issue have found that the [CEQ] regulations do not require an agency to circulate an [EA] for public comment." Montrose Parkway Alts Coal. v. U.S. Army Corps of Eng'rs, 405 F.Supp. 2d 587, 596 (D. Md. Dec. 16, 2005), citing Alliance to Protect Nantucket Sound, Inc., 398 F.3d 105, 115 (1st Cir.); Greater Yellowstone Coal., 359 F.3d 1257, 1279 (10th Cir. 2004); Pogliani, 306 F.3d 1235, 1238-39 (2d Cir. 2002); Como--Falcon Cmty Coal., Inc., 609 F.2d 342 (8th Cir. 1979);*[2] *see also Nat. Res. Def. Council, Inc. v. U.S. Forest Service, 634 F. Supp. 2d 1045 (E.D. Cal. Sept. 5, 2007); Nat. Res. Def. Council v. Kempthorne, 525 F.Supp. 2d 115 (D.D.C. Nov. 30, 2007); City of Irvine v. Fed. Aviation Admin., 539 F.Supp. 17, 31-32 (N.D. Tex. Dec. 28, 1981) (excusing an agency's failure to provide any opportunity for public input into an EA and FONSI on the grounds that the agency was already "fully aware" of public objections to its proposed action). In short, nothing in NEPA, the CEQ implementing regulations, USFS's NEPA regulations, or USFS's guidance documents required USFS to prepare a draft EA or to provide an opportunity for public comment on the final EA and draft FONSI.*

**<u>Section I - Sierra Club and HEAL Utah are both proper "entities" and "objectors"</u>**:

Sierra Club/HEAL Utah Objections: Page 3

"The FS's proposed project and discharges of contaminated mine drainage at the Huntington Power Plant site is likely to cause pollution of groundwater and local surface waters that is reasonably likely to impair the health of the aquatic ecosystem and impair the full use of the water, thus harming members of Sierra Club and HEAL Utah. The FS's proposed project and discharge of acid mine drainage at the Huntington power plant site is likely to degrade, and

---

[1] The CEQ regulations do provide that, in "certain limited circumstances" which do not apply here, the agency "shall make the finding of no significant impact available for public review … for 30 days before the agency makes its final decision on whether to prepare an environmental impact statement and before the action may begin." 40 C.F.R. § 1501.4(e)(2). These include inapposite situations in which "[t]he proposed action is, or is closely similar to, one which normally requires the preparation of an environmental impact statement" or in which "[t]he nature of the proposed action is one without precedent." *Id.*; *see Theodore Roosevelt Conservation P'ship*, 616 F.3d 497 (finding no violation of § 1501.4(e)(s)). In any event, USFS has made the draft FONSI available for public review for 30 days before the agency makes its final decision.

[2] *See also Bering Strait Citizens for Responsible Resource Dev.*, 524 F.3d at 952 (9th Cir. 2008) ("we stress that the regulations governing public involvement in the preparation of EAs are general in approach, *see* 40 C.F.R. § 1506.6, requiring the circulation of a draft EA in every case would apply a level of particularity to the EA process that is foreign to the regulations. Also, requiring the circulation of a draft EA in every case could require the reversal of permitting decisions where a draft EA was not circulated even though the permitting agency actively sought and achieved public participating through other means. The regulations do not compel such formality.")

continue to degrade, the quality of these waters, and thereby adversely affect the recreational, aesthetic, environmental, property, and other interests of the Objectors' members."

***PacifiCorp Response #5:***

*Sierra Club/Heal Utah mention "acid mine drainage" for the first time. As outlined in the EA document (POD), mine water drainage from Deer Creek is not "acid mine drainage." In fact, the excess alkalinity available from the dissolution of carbonate minerals of the strata of the Wasatch Plateau prevents acidity. Branding this water as "acid mine drainage" 12 times throughout the objection letter is patently incorrect. PacifiCorp has retained Petersen Hydrologic, Inc. to prepare an independent professional analysis of this issue, showing that the mine discharge water is clearly not "acid mine drainage",. A copy of the Peterson Hydrologic report is attached to this response letter*

**Section IV – General Statement of Objections:**

Sierra Club/HEAL Utah Objections: Pages 4-5

"The Forest Service's Public Notice Package dated June 13, 2016 states that, '[i]f the water is out of compliance with water quality standards it must be treated before being discharged. The Public Notice Package acknowledges that the water contains 'elevated iron.' The Forest Service's Project Initiation Direction states that a "[d]ischarge permit cannot be obtained within National Forest boundaries, due to elevated concentrations of iron, which would stain and discolor Huntington Creek."

***PacifiCorp Response #6:***

*The first two sentences stating that if the water is out of compliance with DWQ's water quality standards it has to be treated and that the mine discharge water contains elevated iron are correct. However, PacifiCorp is proposing to transport the groundwater via a pipeline to the Raw Water Pond for consumption, not for discharging to a receiving drainage. PacifiCorp has documented the hydrogeologic characteristics and outlined the scientific reasons for the elevated total iron in the groundwater. Monitoring of the intercepted groundwater has shown that the elevated total iron is related to the presence of a pyritic split in the coal seam. That contribution of iron is finite and the level of total iron will reduce in about four to five years. The third sentence stating that a "[d]ischarge permit cannot be obtained within National Forest boundaries, due to elevated concentrations of iron, is incorrect. All new point source discharges of water, treated or otherwise, are prohibited within the United States Forest Boundary after the effective date of designation (R317-2-3). This justification for the pipeline to route the intercepted groundwater from the Deer Creek Mine through a pipeline to a point outside the Forest Boundary is documented in the EA.*

Sierra Club/HEAL Utah Objections: Page 5

"The Project Initiation Direction states that "[t]his action is needed…to discharge that water from the mine in an environmentally sound manner in compliance with state and federal water quality standards. However, the Public Comment Package and Environmental Assessment fail to contain an adequate analysis of current baseline water quality conditions at the power plant site and also fails to conduct a complete analysis of the potential impacts of disposing of 315 million gallons/year of contaminated mine drainage into unlined ponds and land application sites at the power plant. Instead, the Public Comment Package and EA rely on unsubstantiated and conclusory findings of 'no impact.'

The Public Comment Package and EA are largely silent on the fate of the mine drainage once it is conveyed to the Huntington Power Plant other than vague statements such as the "pipeline would then be buried from the diversion structure to the Huntington Power Plant settling pond." The Forest Service's June 13, 2016 Location Map shows the pipeline terminating at an otherwise unidentified "pond" on the power plant property. The Plan of Development states that the "[i]ntercepted groundwater from Deer Creek Mine will be transported to Huntington Power Plant for plant feed water." However, the PacifiCorp Application states, '[w]ater from the pipeline…may be used further downstream for irrigation.'"

***PacifiCorp Response #7:***

- *In these two paragraphs the Sierra Club/HEAL Utah again misrepresent details related to the pipeline infrastructure, power plant site conditions, water quality of the mine drainage and usage of the mine drainage water for power plant operations. The EA and POD documents outline the construction details of the pipeline terminating at the power Raw Water pond. As stated earlier, the Raw Water Pond at the Huntington Plant includes a clay liner. The EA, POD or application documents never state that the water will be stored in an unlined reservoir. The Huntington Plant's 2016 Groundwater Permit renewal application – which is currently pending before the Utah Department of Environmental Quality states the pond has a clay liner.*
- *The POD document states that the mine water along with water diverted Huntington Creek will be stored in the Raw Water Pond for plant operations. Water from the Raw Water Pond is used for various plant operations. After usage in the plant, a small fraction (~3%) of the total combined water sources (including mine water) used at the plant will be routed to the irrigation reservoir. The Sierra Club/Heal Utah misconstrues the information provided in the application to mistakenly conclude that the 315 million gallons/year of diverted water will be used for land application. That is not correct. No physical connections exist that would allow for the water in the Raw Water pond to be r diverted for land application.*
- *As to allegation that the Public Comment Package and the EA "fail to contain an adequate analysis of current baseline water quality conditions," PacifiCorp has a comprehensive hydrologic monitoring program for the Deer Creek Mine including;*

*intercepted groundwater, groundwater springs and surface drainage systems for the East Mountain property. These data establish a solid baseline and support PacifiCorp's conclusions related to the hydrology of the intercepted groundwater in the Deer Creek Mine and ultimate use as a source of water for the Power Plant. PacifiCorp provided the water quality analyses to the governmental agencies to assist their review.*

Sierra Club/HEAL Utah Objections: Pages 5-6

"The 'pond' on the Huntington Power Plant property that will serve as the initial disposal site for the mine drainage is an unlined pond used to accumulate co-mingled liquid waste streams from the power plant...

Liquids in the Raw Water Pond include Huntington Creek water, groundwater from the Deer Creek mine, and process water from the power plant."

***PacifiCorp Response #8:***

- "unlined pond" – *refer to PacifiCorp Response #1 above.*
- "accumulate co-mingled liquid waste streams from the power plant", "Liquids in the Raw Water Pond include Huntington Creek water, groundwater from the Deer Creek mine, and process water from the power plant" *As documented in the Huntington Power Plant Storm Water Pollution Prevention Plan (amended June 2016), the Raw Water Ponds' only source of water is from the Huntington Creek and storm water runoff– no co-mingling occurs within the Raw Water Pond.*

Sierra Club/HEAL Utah Objections: Page 6

"The pond that is scheduled to initially receive the mine drainage has a history of seepage into Huntington Creek. PacifiCorp previously stated that "[a]ll attempts to control the seepage from the pond have failed. Although PacifiCorp terminated its discharge permit for the Raw Water Pond discharge in 2015, there is no analysis in the Public Comment Package of whether the substitution of contaminated mine drainage might exacerbate the history of seepage or contamination from the pond into groundwater and/or Huntington Creek. Further, while the EA includes a Hydrology Report by Jeff Salow, the hydrological analysis is incomplete and fails to meet the scientific requirements of NEPA."

***PacifiCorp Response #9:***

*PacifiCorp has previously acknowledged that the Raw Water Pond has had identifiable leaks of the liner system. When such leaks are identified, PacifiCorp has made immediate repairs to the liner system. PacifiCorp conducts routine inspections of the Pond, including of the dam and embankment structures to verify integrity. As part of the EA process, PacifiCorp provided a hydrologic analysis to the governmental agencies comparing the diverted water from Huntington Creek to the projected blended ratio including the intercepted groundwater from the Deer Creek*

*Mine. That analysis concluded that blending the Huntington Creek water with the intercepted groundwater from Deer Creek will cause insignificant geochemical change to the water stored in the Raw Water Pond. In the event of a future leak in the Raw Water pond liner, the relatively small amount of mine water in the Raw Water pond will cause not environmental harm to the hydrologic balance. (Refer to PacifiCorp's response #10 for a discussion mine water compliance to the Numeric Criteria for Aquatic Wildlife – 3C).*

Sierra Club/HEAL Utah Objections: Page 6

The EA misrepresents the water quality of the discharge by stating, "none of the pollutant parameters were detected" from PacifiCorp's water quality sample base on EPA's Priority Pollutant List. However, the EA fails to recognize that EPA's Priority Pollutant List largely contains manufactured organic pollutants that would not be expected to be found naturally in rural groundwater in a mountainous area of the state. The EA fails to acknowledge that additional analytical results were generated for inorganic compounds, such as salts and metals. These inorganic analytical results show significant detections for nitrogen, conductivity, TDS, chloride, sulfate, aluminum, boron, calcium, chromium, iron, magnesium, manganese, molybdenum, nickel, potassium, and sodium.

***PacifiCorp Response #10:***

*These statements are misleading and show a misunderstanding of the basic hydrology of the area. Sierra Club/HEAL Utah's attempt to portray PacifiCorp as misrepresenting the water quality of the mine water is without merit. In fact, PacifiCorp has collected hundreds of samples documenting the quality of the intercepted groundwater at the Deer Creek Mine. The analysis includes not only solute constituents documenting the geochemical nature of the groundwater, but also whole effluent testing that has verified the groundwater discharge is not detrimental to aquatic life. All water, whether surface or groundwater will include minor amounts of the constituents listed above. Levels of the constituents depends upon the hydrogeologic setting and interaction of the groundwater and the geologic formations from which it derives. Specifically to the statement concerning the EPA's Priority Pollutant List, DWQ requested that PacifiCorp analyze the intercepted groundwater to comply with the EPA Form 2C requirements. PacifiCorp continues to sample and analyze the intercepted groundwater at Deer Creek, and to provide the detailed results to multiple governmental agencies.*

*The following table compares the numeric standards established by the State of Utah (Table 2.14.2 – Numeric Criteria for Aquatic Wildlife 3C – Huntington Creek) and groundwater intercepted in the Deer Creek Mine projected to be discharged at Rilda Canyon Portals.*

| Parameter | State of Utah<br>Utah<br>Administrative Code<br><br>Standards of Quality for Waters of the State Rule R317.2<br><br>Table 2.14.2<br>*Numeric Criteria for Aquatic Wildlife 3C – Huntington Creek* | Deer Creek Mine Intercepted Groundwater Projected Discharge at Rilda Canyon Portals Note 1 |
|---|---|---|
| **pH (units)** | 6.5 – 9.0 | 7.38 |
| **Aluminum, ug/L (dissolved)**<br>**(1 hour average)** | 750 | 50<br>Detected in three out of the six samples |
| **Arsenic, ug/L (total)**<br>**(1 hour average)** | 340 | ND<br>Lab reporting limit 10 |
| **Cadmium, ug/L (total and dissolved)**<br>**(1 hour average)** | 2.0 | ND<br>Lab reporting limit 1 |
| **Chromium, ug/L (total)**<br>**(1 hour average)** | 16 | 3.6<br>Five samples analyzed |
| **Copper, ug/L (total and dissolved)**<br>**(1 hour average)** | 13 | ND<br>Lab reporting limit 10 |
| **Lead, ug/L (total and dissolved)**<br>**(1 hour average)** | 65 | ND<br>Lab reporting limit 10 |
| **Mercury, ug/L (total)**<br>**(4 day average)** | 0.012 | ND<br>Lab reporting limit <0.2<br>Five samples analyzed |
| **Nickel, ug/L (total)**<br>**(1 hour average)** | 468 | 34.6<br>Five samples analyzed |
| **Selenium, ug/L (total)**<br>**(1 hour average)** | 18.4 | ND<br>Lab reporting limit <2 |
| **Silver, ug/L (total)**<br>**(1 hour average)** | 1.6 | ND<br>Lab reporting limit <2 |
| **Zinc, ug/L (total and dissolved)**<br>**(1 hour average)** | 120 | 28.5<br>Detected in two out of the six samples |
| Sample period represents the last six months of sampling from 11th – 17th West sealed area<br>Note 1: Samples collected from 11th – 17th West discharge<br>ND: Not Detected | | |

*All of the water quality constituents analyzed in the Deer Creek Mine intercepted groundwater projected to discharge at Rilda Canyon Portals complies with the State of Utah (Table 2.14.2 – Numeric Criteria for Aquatic Wildlife 3C – Huntington Creek) numeric criteria for aquatic wildlife for the receiving waters of Huntington Canyon.*

Sierra Club/HEAL Utah Objections: Page 7

"The EA states that the mine drainage has an estimated Total Dissolved Solids ("TDS") level of 500 mg/l. In contrast, the TDS water quality data for Huntington Creek is much lower than the mine drainage, with an average of 244 mg/l. Therefore, the mine drainage has the potential to exacerbate the impairment to Huntington Creek. The Huntington Power Plant is located along a segment of Huntington Creek that is impaired for TDS, pH, temperature, and dissolved oxygen. The Public Comment Package and EA both fail to perform any field investigation, fate and transport modeling or other accepted scientific analysis to determine whether disposal of the mine drainage into the pond could contribute to the TDS impairment in Huntington Creek. In addition, the Public Comment Package and EA also fail to perform any similar analysis to determine whether the concentrations of salts in the mine drainage could interfere with compliance with Colorado River Salinity Standards."

***PacifiCorp Response #11:***

*As stated earlier, the POD (included as part of the EA) document states that the mine water along with water diverted from Huntington Creek will be stored in the Raw Water Pond for plant operations. Water from the Raw Water Pond will be used for various plant operations, and ultimately, after usage in the plant, a small fraction (~3%) of the water will remain and be routed to the irrigation reservoir. The objection above misconstrues the facts to suggest that groundwater from the mine will have a direct impact to Huntington Creek. As part of the EA process, PacifiCorp provided a hydrologic analysis to the governmental agencies comparing the diverted water from Huntington Creek to the projected blended ratio including the intercepted groundwater from the Deer Creek Mine. Blending the Huntington Creek water with the intercepted groundwater from Deer Creek will cause insignificant geochemical change to the water stored in the Raw Water Pond as outlined in the EA.*

Sierra Club/HEAL Utah Objections: Page 7

"Instead, the EA simply states that "[t]he water management and discharge would be regulated by PacifiCorp's existing UPDES permits. This statement is misleading because PacifiCorp does not have a UPDES permit to discharge into surface waters from the Huntington Power Plant. Moreover, PacifiCorp's current stormwater discharge permit and current groundwater discharge permit do not authorize a discharge of mine drainage water from the proposed project."

***PacifiCorp Response #12:***

*PacifiCorp does not currently have a UPDES permit to discharge from Huntington Plant because PacifiCorp does not discharge from the Huntington Plant and therefore is not required to have a UPDES permit. In the unlikely event that PacifiCorp desires to discharge the mine water into Huntington Creek at some future date, then the Deer Creek Mine UPDES permit could be amended (if approved by the State of Utah) to obtain another discharge point for the mine discharge water. If the State of Utah approves a new discharge point to Huntington Creek*

*under an amended UPDES discharge point, it will only allow for the discharge of mine water, and not Plant discharge water.*

*Sierra Club/HEAL Utah misrepresent the information from the EA. Simply put, PacifiCorp is not proposing to discharge the mine drainage to a receiving drainage of Huntington Canyon, but instead to consume the intercepted water in the power plant operations. If in the event PacifiCorp alters the plan and discharges the water to the receiving drainage of Huntington Canyon the following steps are required by state and federal regulations:*

- *Meeting with DWQ staff and management:*
    - *Discussion of optional point source discharge options*
    - *Water quality criteria sampling for application submittal*
- *Sample intercepted mine groundwater according to the specifications outlined by DWQ*
- *Apply for a point source discharge permit (important to note that in any event, PacifiCorp would not be allowed to establish a new point source discharge within the Forest Boundary, meaning that a pipeline would be required to be built at least to the Forest boundary). PacifiCorp officially submitted an application to DEQ on September 15, 2016 to revise the current Deer Creek UPDES permit to allow for a permanent discharge point to Huntington Creek outside the Forest boundary.*
    - *Provide the necessary hydrologic background data to DWQ including the anti-degradation analysis*
- *DWQ accepted PacifiCorp's application as complete on October 5, 2016*

Sierra Club/HEAL Utah Objections: Page 7

"PacifiCorp's application admits that '[w]ater from the pipeline…may be used further downstream for irrigation.' In fact, water in the initial receiving pond is transferred to an 'irrigation pond' and is land applied ('irrigated') to a so-called 'research farms' (land application site) at the Huntington Power Plant. The so-called research farm at the Huntington Power Plant is immediately adjacent to Huntington Creek. The research farm also has a history of discharge into Huntington Creek through a series of field drains constructed to collect seepage from the land application site and deliver it to Huntington Creek."

***PacifiCorp Response #13:***

*Again the Sierra Club/HEAL Utah misstate the facts related to the operation of the Huntington Plant water usage and land application practices. Water from the Raw Water pond is not physically connected to the irrigation reservoir. Water diverted from Huntington Creek to the Raw Water pond is used in various functions within the plant operations, mainly in the cooling towers and boiler vents. Approximately 97% of all water diverted from Huntington Creek is evaporated and the remaining 3% is transferred to the irrigation reservoir after plant utilization.*

*As to the last sentence, referring to the "field drains constructed to collect seepage from the land application site and deliver it to Huntington Creek", again Sierra Club/Heal Utah's*

*objections are referring to outdated documents accusing PacifiCorp of diverting the "field drains" directly to Huntington Creek. PacifiCorp amended the field drain collection system back in late 2008 and early 2009eliminating the potential diversion to Huntington Creek. Water from the field drains is diverted back to the plant with a lift station pump or diversion ditches for use in the plant scrubber operations or transferred to the irrigation reservoir.*

Sierra Club/HEAL Utah Objections: Page 8 Paragraph 2

"In the latest draft of Utah's list of impaired waters, Huntington Creek is listed as impaired for TDS, pH, dissolved oxygen, and temperature. The TDS, pH, oxygen, and temperature impair the water's use for agriculture and to support aquatic life."

***PacifiCorp Response #14:***

*The issue regarding the impairment of Huntington Creek is irrelevant to the Forest Service's approval of the pipeline across federal land. Further, Sierra Club/HEAL Utah simultaneously complain about the impairment to Huntington Creek while acknowledging that more water will be left in the Creek – thereby improving water quality – as a result of the pipeline supplying additional water to the Raw Water Pond from the Deer Creek Mine. As explained above, the water from the mine will not impair Huntington Creek because it will not be discharged, but consumptively used at the plant. In any event, the following addresses the reasons for Huntington Creek being listed as impaired.*

*Levels of TDS, pH, dissolved oxygen, and temperature outside the range of the numeric criteria set by EPA and DEQ do indeed impact the beneficial uses of the Huntington Creek. However, Huntington Creek has not always been listed as impaired. Prior to the current Integrated Report (IR), 6 year period of record from October 1, 2008 through September 30, 2014, data utilized by DEQ was collected by DEQ, USFS, BLM and a variety of other state and local agencies that strictly followed a QA/QC program where State of Utah certified analyzing equipment was calibrated and used by qualified and experienced individuals. During this current IR assessment period, EPA required DEQ to include data collected in rivers and streams as part of the compliance monitoring for the Division of Oil, Gas, and Mining (DOGM) as well as data collected by citizen groups. (2016 IR ver. 2.0, Introduction, page 16). The DOGM database in particular included field monitoring results which by their nature include results from instrumentation not as accurate as lab based instrumentation. Without the inclusion of this new data set, excluding TDS (see separate discussion concerning TDS below) for Assessment Units (AU) Huntington Creek 2 (HC2) and Huntington Creek 3 (HC3), would not have been designated as impaired.*

*The additional data set collected for these AUs came from the DOGM hydrology database. DOGM requires (R645-301-723) water samples to be collected and analyzed according to the methodology in the current edition of Standard Methods for Examination of Water and Wastewater" or the methodology in 40 CFR Parts 136 and 434. Field analytical results can vary from laboratory analytical results due to the type of instrumentation used (portable meters*

*and probes). For instance, the table below shows all samples collected within the period of record that fell out of the range of the numeric standard criteria for TDS (1200 mg/L), pH (6.5 – 9), Dissolved Oxygen (DO) (minimum 6.5 mg/L), and Temperature (20$^{o}$ C). Notably, pH units for the Deer Creek Mine Rilda Canyon impair the beneficial uses of Huntington Creek. All values excluding TDS showing impairment were field results. Lab results, excluding TDS, did not result in any impairment designations.*

*The following table identifies all sample sites that resulted in exceedances of the water quality numeric criteria used for DEQ's decision for determining whether Assessment Units HC2 and HC3 support their designated uses or not. Flow has been added to the table to show the contribution to Huntington Creek. (Data retrieved from the Excel file downloaded at www.deq.utah.gov, 2016 Integrated Report, Chapter 3, River and Stream Assessment. Select the link All Rivers and Stream Assessments)*

| Mine | Site | Date | TDS (mg/L) | pH (field) | pH (lab) | DO (mg/L) | Temp C° | Flow (gpm) |
|---|---|---|---|---|---|---|---|---|
| Bear Canyon | CK-2 | 6/10/16 | | | | | 23.7 | 140 |
| Bear Canyon | CK-2 | 6/8/15 | | | | | 22.1 | 150 |
| Bear Canyon | CK-2 | 10/22/14 | | | | | 23.3 | 100 |
| Bear Canyon | CK-2 | 6/10/14 | | | | | 22.3 | 140 |
| Bear Canyon | CK-2 | 6/27/13 | | | | | 23.5 | 120 |
| Bear Canyon | CK-2 | 6/25/12 | | | | | 20.5 | 160 |
| Bear Canyon | SBC-17 | 6/9/16 | | | | | 21.8 | 4 |
| Bear Canyon | SBC-17 | 6/8/15 | | | | | 22.1 | 20 |
| Bear Canyon | SBC-17 | 10/22/14 | | | | | 21.5 | 10 |
| Bear Canyon | SBC-17 | 6/10/14 | | | | | 20.2 | 10 |
| Bear Canyon | SBC-17 | 6/27/13 | | | | | 21.4 | 5 |
| Bear Canyon | SBC-17 | 6/25/12 | | | | | 20.1 | 7 |
| Bear Canyon | SBC-17 | 8/4/09 | | | | | 22.5 | 1 |
| Bear Canyon | SBC-17 | 2/22/06 See Note 1 | | | | | 50.8 | |
| Bear Canyon | FC-2 | 10/27/15 | | | | 6.1 | | 10 |
| Bear Canyon | FC-2 | 8/12/15 | | | | 3.6 | | 10 |
| Bear Canyon | FC-2 | 10/23/14 | | | | 6.1 | | 5 |
| Bear Canyon | FC-2 | 8/13/14 | | | | 6.3 | | 5 |
| Bear Canyon | FC-2 | 10/24/13 | | | | 6.0 | | 5 |
| Bear Canyon | FC-2 | 8/14/13 | | | | 6.1 | | 5 |
| Bear Canyon | FC-2 | 8/24/12 | | | | 6.03 | | 5 |
| Bear Canyon | BC-2 | 6/9/16 | 1290 | | | | | 40 |
| Bear Canyon | BC-2 | 8/10/15 | 1269 | | | | | 40 |
| Bear Canyon | BC-2 | 2/14/14 | 1244 | | | | | 50 |
| Bear Canyon | BC-2 | 9/27/11 | 1305 | | | | | 20 |
| Bear Canyon | BC-2 | 2/25/10 | 1238 | | | | | 1.5 |
| Crandall Canyon | UPF-1 | 6/27/14 | 1781 | | | | | 1540 |
| Deer Creek | HCC01 | 6/6/13 | | | | 4.6 | | 43,668.24 |
| Deer Creek | HCC01 | 3/12/13 | | | | 6.33 | | 3051.84 |
| Deer Creek | HCC01 | 6/9/10 | | | | 5.28 | | 102,102.00 |
| Deer Creek | HCC02 | 6/3/15 | | | | 6.25 | | 67,903.44 |
| Deer Creek | HCC02 | 9/3/14 | | | | 5.02 | | 18,535.44 |
| Deer Creek | RFC-1 | 6/4/14 | | 9.03 | 8.67 | | | 2894 |
| Deer Creek | RFC-1 | 9/5/13 | | 9.17 | 8.49 | | | 368 |
| Deer Creek | RFC-1 | 6/3/13 | | 9.08 | 8.55 | | | 1151 |
| Deer Creek | RFC-1 | 9/6/11 | | 9.05 | 8.55 | | | 190 |
| Deer Creek | RCF3 | 9/14/15 | | | | 5.59 | | 20 |
| Deer Creek | RCF3 | 6/2/15 | | | | 5.0 | | 2693 |
| Deer Creek | RCF3 | 6/4/14 | | | | 6.0 | | |
| Deer Creek | RCF3 | 3/12/13 | | | | 5.75 | | 50 |
| Deer Creek | RCF3 | 6/15/11 | | | | 5.5 | | 26076 |
| Deer Creek | RCF3 | 6/8/10 | | | | 5.74 | | 2903 |
| Deer Creek | RCW4 | 3/24/09 | 1393 | | | | | 148.6 |

*Note 1: Although outside the period of record for the current IR, this data point shows a water temperature of 123.44° F. Obviously this data is an outlier and should have been omitted during review of the data.*

*The analytical results for DO are also misleading. Both Bear Canyon and Deer Creek reported DO below the limit of the numeric criteria. However, when comparing the analysis results for DO to flow for the Deer Creek sites and Huntington Creek, a reviewer must conclude that there was a potential problem with instrumentation, or the selection of the stream segment. This provides insight on the potential problems of simply including additional hydrologic data without evaluating the merit of data. At the time the sample was collected, flow in Huntington Creek was well above average flow rates and it would not have been likely to produce low DO results as shown for the sites. The numeric results for DO for Bear Canyon and Deer Creek Canyon have an insignificant impact to the Huntington Canyon drainage as shown by the negligible flows reported in comparison to the total flow rate of Huntington Creek. Proportional flow rates from the contributing sub-drainages should have been evaluated in quantifying the relationship to the impairment of Huntington Creek.*

*TDS is also found in three monitoring locations to be outside the numeric criteria used for the AU. Bear Canyon exceeded the numeric criteria in one sample per year in very low flow conditions. Crandall Canyon and Deer Creek both exceeded one sample during the 6 year assessment period of the IR. Huntington Creek samples (sampling locations of Huntington Creek HCC01 and HCC02) did not exceed the numeric criteria during the 6 year assessment period of the IR. The exceedances reported have negligible impacts to the water quality of the entire Huntington Canyon drainage system.*

*Sierra Club/HEAL Utah's statement attempting to relate the impairment status of HC2 and HC3 with the irrigation practices of the Huntington Plant is very misleading and shows a complete misunderstanding of the assessment methods used to determine whether the designated uses are supported or not.*

Sierra Club/HEAL Utah Objections: Page 9 Paragraph 2-4, refer to Objection document

***PacifiCorp Response #15:***

*Paragraphs 2-4 repeatedly accuse PacifiCorp of conducting practices at the Huntington Plant that impact Huntington Creek, and fail to account for the mitigation efforts implemented by PacifiCorp. The operation of the Plant, including the use of waste water for irrigation is a separate issue in the context of evaluating the purpose and need of the mine closure pipeline project. Diverting mine water to the raw water pond that will be approximately 3% of the total diverted water to the pond, will not alter the operation of the plant. This means that the combined water in the Raw Water pond will continue to be used in plant operations using existing operational constraints just as it was used before the mine water was introduced. For example, if the mine drainage water flow rate diverted to the plant is 500 gpm and the average diversion of Huntington Creek is 8,500 gpm, and knowing that approximately 97% of the diverted water is evaporated, mainly by the cooling towers and boiler vents, approximately 15 gpm of the mine water diversion will be routed to the irrigation reservoir as a portion of the combined water. However, regardless of whether the water supply to the Raw Water pond is strictly from the Huntington Creek or includes the proposed mine water, total diversion from the*

*plant operations to the irrigation pond will remain constant. The Deer Creek Mine water supply has an increased TDS concentration as compared to the Huntington Creek supply; however, the Huntington plant cooling tower circulating water quality is controlled through a water treatment process such that the TDS concentration of the circulating water will not be affected by the use of the supplemental Deer Creek Mine supply. In essence, although the fraction of the make-up water supply to the Huntington cooling tower circulating water system from the Deer Creek Mine will have an increased TDS concentration as compared to the Huntington Creek water supply, the cooling tower circulating water system will be controlled to maintain the current TDS concentration.*

*Sierra Club/HEAL's assertion that water quality downstream of the plant will be impacted by the mine water in reality is a continuation of Sierra Club/HEAL's theme that the plant is impacting downstream water quality. Even if that were true – which it is not – that is an issue separate from the NEPA process for installation of the pipeline.*

Sierra Club/HEAL Utah Objections: Page 10, Paragraph 2

Section V – Specific Statement of Objections:

1. **The FS has failed to satisfy the mandatory public involvement requirements of NEPA and its implementing regulations.**

Sierra Club/HEAL Utah claim that the Public Comment Package is deficient because it did not include information on the fate of the water once it reached the Plant. The NEPA was done primarily for the construction of the pipeline, rather than the impacts of the water discharge. This NEPA action rightly focuses primarily on the pipeline construction impacts, whereas the water quality issues are appropriately addressed primarily in other forums such as UDEQ and UDOGM (e.g., the NEPA analysis for the pipeline project covers the cumulative impacts of the water quality issues).

Sierra Club/HEAL Utah Objections: Page 11

The claims that the 315 million gallons per year ("MGY") discharged at the pond will then be applied to a field immediately adjacent to Huntington Creek are unsupported and incorrect. The NEPA document was clear on what would happen to the water once it reached the plant; the water will be consumed in the plant cooling operations.

Sierra Club/HEAL Utah Objections: Page 12

2. **"The FS's 'purpose and need' statement is illegally narrow because it forecloses evaluation of reasonably foreseeable impacts that will occur off public lands."**

"The FS's Public Comment Package states, "the purpose of the pipeline is to avoid potential contamination of the water resources on ***federal lands*** due to water with high levels of iron filling the mine and naturally flowing out of the portals in Rilda

Canyon." Public Comment Package, p. 1 (emphasis added). The FS's statement of purpose and need is illegally narrow because it only serves to protect ***federal lands*** from contamination and ignores impacts to nonfederal lands downstream. Likewise, the FS's environmental analysis only focuses on impacts to lands and waters upgradient of the point of discharge at the Huntington Power Plant and fails to analyze impacts to ground and surface waters at the power plant site, to Huntington Creek, and areas downstream. Here the FS violated NEPA by refusing to consider reasonably foreseeable impacts to ground and surface waters by impermissibly cutting off its evaluation as soon as the water reaches an unlined pond at the Huntington Power Plant. NEPA, however, does not allow federal agencies to avoid analyzing and disclosing the reasonable foreseeable impacts of their decision merely by crafting a narrow purpose and need statement."

***PacifiCorp Response #17:***

*Sierra Club/HEAL Utah oversimplifies the asserted purpose and need of the mine water drain pipeline and the arduous steps taken by PacifiCorp dealing the mine closure. BLM and USFS accurately disclosed the potential environmental impacts associated with the installation mine water drain line and the usage at the power plant. Sierra Club/Heal Utah fails to understand the water diversion and usage in the plant. Use of the mine water will not alter the plant operations and diversions by the plant are not directly linked to the irrigation reservoir as stated by the Sierra Club/Heal Utah. The use of the term "high levels of iron" is used by the Sierra Club/Heal Utah to suggest adverse changes to the water quality when in fact the total iron level, (based on hydrologic sampling, which data was transmitted to the governmental agencies during the preparation of the EA) is slightly above one part million. As stated in the EA, total iron is expected to dissipate in time to back-ground levels of intercepted groundwater.*

*The USFS did not shirk a duty by not analyzing the groundwater and surface water in the Huntington Plant vicinity because the irrigation systems and ground and surface water are regulated by the State of Utah Division of Water Quality.*

Sierra Club/HEAL Utah Objections: Pages 15-29 Objections #3 through #13

*In Objections #3 through #13 the Sierra Club/Heal Utah restates the same main objections discussed previously through multiple scenarios. PacifiCorp will respond only to points previously not addressed.*

Sierra Club/HEAL Utah Objection

"The Forest Service failed to undertake public comment on its range of alternatives and failed to consider reasonable and less environmentally harmful alternatives." Page 18.

***PacifiCorp Response #18:***

*The EA, which includes the POD documents, discloses PacifiCorp's attempts to close the mine and redirect the water from the northwest portion of the mine to the Deer Creek portals. USFS did consider alternatives, such as installing a hydrologic bulkhead in the Deer Creek Mine. Mine Safety and Health Administration (MSHA) denied PacifiCorp's request to install hydrologic bulkheads in the Deer Creek Mine in April 2016. That action causes water intercepted in the mine to gravity flow to the Rilda Canyon portals and if discharged, would result in non-approved point source discharge. Location of the Rilda Canyon portals within the Forest boundary presents another level of difficultly. Anti-degradation regulations prohibit any new point source discharges within the forest boundary. Given these circumstances, options to drain the intercepted groundwater from the mine become problematic. PacifiCorp, after discussions with parties of interest, including local, state and federal agencies, proposed the pipeline alternative to drain the mine minimizing the impacts to the environment.*

Sierra Club/HEAL Utah Objection

"The FS failed to adequately present information on the baseline ground and surface water conditions at the disposal site downstream." Pages 18-20.

***PacifiCorp Response #19:***

*PacifiCorp has conducted extensive hydrologic monitoring related to the Deer Creek Mine including; groundwater studies (seeps and springs), intercepted groundwater in the mine and surface drainage systems. Routine hydrologic data collected by PacifiCorp is uploaded to the DOGM database. In addition to the hydrologic monitoring, PacifiCorp has conducted numerous studies to determine the hydrologic regime and potential hydrologic consequences of conducting underground coal mining. Applicable data related to the proposed mine drain line was transmitted to USFS to evaluate the hydrologic conclusions.*

Sierra Club/HEAL Utah Objection

"The FS illegally deferred to the unsubstantiated, undisclosed, and sometimes future determinations of state agencies to satisfy its obligations under NEPA." Pages 20-21.

***PacifiCorp Response #20:***

*The Objection claims that it is illegal to defer to other agencies to ensure compliance with laws and regulations regarding ground and surface water impacts. PacifiCorp applied and received approval from Division of Water Rights to include the mine portals of the Deer Creek Mine (Deer Creek Canyon and Rilda Canyon) as permanent points of division for use in the Power Plant (approved November 2016). PacifiCorp has applied for an additional UPDES outfall for the Deer Creek Mine (Outfall 003) to potentially discharge intercepted groundwater directly to Huntington Creek at some future date if necessary. The UPDES permitting process will ensure*

*that potential impacts to the receiving stream are properly regulated. USFS is not deferring to these permitting processes in lieu of a NEPA analysis, rather in analyzing the potential impact of the proposed action on water quality, it is taking into consideration that any such future discharges will be subjected to a rigorous regulatory permitting process.*

Sierra Club/HEAL Utah Objection

"The Public Comment Package and EA acknowledges that PacifiCorp may have to acquire a Clean Water Act Section 404 dredge and fill permit to proceed with this project." Page 21.

***PacifiCorp Response #21:***

*As stated in the EA and POD documents, PacifiCorp proposes to construct/bury a HDPE pipeline within the existing rights-of-way in Rilda Canyon along Emery County Road #306 and Huntington Canyon State Highway 31. Construction layout and installation techniques employed avoids impacts to the streams in Rilda and Huntington canyons. PacifiCorp coordinated these pipeline construction efforts with State of Utah Water Rights and the United States Army Corps of Engineers. Both agencies verified that neither a State of Utah (Stream Alternation permit) nor a US Army Corps of Engineers (Federal Clean Water Act Section 404) permit is required for the proposed Deer Creek Mine water relief pipeline project. Even if such permits were required, it is not USFS's responsibility under NEPA to ensure that a proponent obtains the needed permits; rather, USFS's responsibility is simply to take a hard look at the reasonably foreseeable environmental impacts. It is the proponent's responsibility to obtain the needed permits.*

Sierra Club/HEAL Utah Objection

"The DN/FONSI fails to require any mitigation or monitoring despite approving disposal of 315 MGY of mine drainage into unlined ponds and land application sites at the Huntington Power Plant." Page 22.

***PacifiCorp Response #22:***

*The Objection claims that no mitigation measures were "imposed" by the FS. PacifiCorp has complied with all rules and statutes that deal with protective measures to prevent leakage / contamination of existing water resources while the pipeline is transporting water. PacifiCorp has committed to monthly monitoring of water quantity and quality at the upstream and downstream ends of the pipeline, when transporting water, to ensure that there are no leaks or water quality excursions until the water quality has reached compliance levels. In any event, it is not the role of NEPA or the DN/FONSI to require mitigation or monitoring; rather, NEPA's role is to require USFS to take a hard look at the reasonably foreseeable environmental impacts.*

Sierra Club/HEAL Utah Objection

"The FS failed to evaluate impacts to BLM sensitive fish species." Pages 22-23.

***PacifiCorp Response #23:***

*The EA and corresponding documents (including the USFS BA/BE report) evaluated the proposed project's environmental resource impacts that were reasonably foreseeable. PacifiCorp is not proposing to discharge the mine water directly to the receiving drainages of Huntington Creek. Plans required of the construction contractors will include SWPPP and SPCC plans designed to prevent spills or sediment from entering waterways. Because such impacts were not reasonably foreseeable, USFS was not required to evaluate them.*

Summary:

As in the original objection from July, the mine discharge water is mistakenly and repeatedly (at least 12 times) mischaracterized as "acid mine drainage". This is a basic misunderstanding that appears to show a complete lack of knowledge about one of the fundamental facts of the discharge issue. The term "acid mine drainage" refers to a different problem that is an issue in other parts of the country. Using emotional and hyperbolic language such as "acid mine drainage," "highly contaminated mine drainage" and "highly contaminated acid mine drainage" when use of these terms is not supported by facts, reveals the obstructionist nature of these objections.

The Objection lists **14 specific issues** and dozens of legal cases to declare that the EA was conceived, prepared, and published illegally. The Objection repeatedly faults USFS for "illegally" not allowing comments during the preparation of the EA and only soliciting "objections" after the preparation of the EA and the draft DN were published. The legal analysis above, of NEPA's public notice requirements demonstrates that BLM and USFS fully complied with all existing NEPA laws and regulations.

The Objection repeatedly makes demands that baseline water quality data be obtained or made available for the mine discharge, Huntington Creek above and below the Plant, inflow and outflow of the pond, and groundwater at Huntington Plant. PacifiCorp has collected hydrologic data for several decades related to the mines and power plants both in terms of groundwater and surface water, and has provided that data to USFS.

The Objection demands that studies of the effects of dewatering the mine on surface and groundwater be analyzed, and that the EA should conduct a survey of springs and seeps in the vicinity of the mine to analyze whether there would be an adverse effect on the springs and seeps from the diversion of groundwater. These demands go well beyond the requirements of NEPA, and show a lack of understanding of the regulations imposed on coal industry.

# DEER CREEK MINE

# VOLUME 12

# MILL FORK LEASE

**R645-301-700**

**HYDROLOGY**

# APPENDIX D

**POST MINE CLOSURE HYDROLOGIC ANALYSIS**

- **Sediment and Goethite Loading Report (Peterson, 2017)**

PETERSEN HYDROLOGIC

18 January 2017

Mr. Charles Semborski, P.G.
Manager of Geology and Exploration
PacifiCorp – Interwest Mining Company
15 North Main Street
Huntington, Utah 84528

Chuck,

At your request, we have evaluated the likely iron geochemistry behavior of Deer Creek Mine discharge waters blended with Huntington Creek waters in the clay-lined Raw Water Storage Pond at the PacifiCorp Huntington Power Plant. We have also evaluated the likely characteristics and fate of the sediment that will likely be deposited in the storage pond as a result of the inflow of these waters to the pond. Our findings in this regard are summarized in this letter report.

**Introduction**

The Deer Creek Mine Rilda Canyon 1st Right surface facilities are located in Deer Creek Canyon, approximately eight miles northwest of the town of Huntington, Utah (Figure 1). PacifiCorp proposes to construct a buried pipeline to convey mine water from the closed Deer Creek Mine to the PacifiCorp Huntington Power Plant near Huntington, Utah (Figure 1). The water from the pipeline will flow into the existing Raw Water Storage Pond at the Huntington Power Plant facility.

2695 N. 600 E. LEHI, UTAH 84043 (801) 766-4006

The piped Deer Creek Mine water will be blended with water that is currently being diverted from nearby Huntington Creek into the pond. The blended water in the pond will be utilized for operational purposes at the power plant.

Total iron has been detected in both Huntington Creek water and in the potential mine discharge water from the Deer Creek Mine. The purposes of this investigation are to

1) Determine the likely geochemical behavior of the iron in the blended Huntington Creek and Deer Creek Mine discharge waters in the Raw Water Storage Pond, and
2) Evaluate the likely characteristics and fate of the sediment that will be deposited in the pond as suspended solids settle from the pond.

**Water Quality Characteristics of Waters**

*Huntington Creek*

Surface waters from Huntington Creek have been routinely monitored by PacifiCorp at station HCC01. HCC01 is located on Huntington Creek above the confluence with Deer Creek (Figure 1). Historical monitoring information from HCC01 are available on-line at the Utah Division of Oil, Gas and Mining Utah Coal Mining Water Quality Database (DOGM, 2017; http://linux3.ogm.utah.gov/WebStuff/wwwroot/wqdb.html). The long-term average chemical characteristics of the water monitored at HCC01 for the period 1999-2016 are presented in Table 1. The pH values measured at HCC01 during this period average 8.4. The moderately alkaline character of Huntington Creek water is similar to pH values measured in surface water systems regionally (UDOGM, 2017). It is apparent in Table 1 that, as anticipated in a flowing mountain stream, the surface water is well aerated with an average dissolved oxygen concentration of 9.3 mg/L. The total suspended solids (TSS) in the stream average 35 mg/L during this period and the average total iron concentrations average 0.48 mg/L (Refer to Deer Creek Mine permit Volume

12, R645-700 Hydrology, Appendix D – Post Mine Closure Hydrologic Analysis, Huntington Creek HCC01 Water Quality Analysis 1990-2016). As anticipated for a well aerated stream, the dissolved iron concentrations are very low in Huntington Creek water. Dissolved iron concentrations measured in the stream water have always less than the laboratory detection limits (UDOGM, 2017). Upon inspection of the data in the UDOGM database, it is apparent that there is a positive correlation between the measured total iron concentrations and the total suspended solids concentrations detected in Huntington Creek water. This suggests that total iron in the stream exists in the form of naturally occurring, solid, iron-bearing sediments (minerals) in the creek rather than ionic species dissolved in the water.

*Deer Creek Mine, Rilda Canyon Portal Area Groundwater*

Intercepted groundwater from the Deer Creek Mine underground workings has periodically been sampled by PacifiCorp at the 11$^{th}$ – 17$^{th}$ West Seals location. This groundwater is believed to be representative of the in-mine intercepted groundwater that may potentially rise to the levels of the mine portals and be conveyed through the Deer Creek pipeline to the Huntington Power Plant Raw Water Pond (Figure 1). The geochemical characteristics of the Deer Creek Mine 11$^{th}$ -17$^{th}$ West Seals from the 12 July 2016 sampling event are listed in Table 1. Laboratory reporting sheets for this sample are attached to this report (Refer to Deer Creek Mine permit Volume 12, R645-700 Hydrology, Appendix D – Post Mine Closure Hydrologic Analysis, Deer Creek In-Mine Sealed Area Water Quality Analysis and Graphs 2012-2016, for complete sampling history of intercepted groundwater from sealed areas). The pH value measured in the intercepted Deer Creek Mine groundwater (7.66) indicates near neutral to moderately alkaline conditions in the groundwater system. The total iron concentration measured in the Deer Creek Mine groundwater was 1.35 mg/L, while the dissolved iron concentration was less than the lower laboratory detection limit (0.03 mg/L). The lack of a dissolved iron component in the groundwater indicates that all of the iron detected by the laboratory was in the form of solid, iron-bearing particulates rather than dissolved species.

**Geochemistry of Blended Water**

As discussed previously, the surface water diverted from Huntington Creek to the Raw Water Storage Pond at the Huntington Power Plant has a long-term average dissolved oxygen concentration of 9.3 mg/L. Although historical dissolved oxygen data from the raw water pond itself are not available, it is anticipated that the constant inflow of well-aerated Huntington Creek water at substantial rates (several thousands of gallons per minute) and the large surface area of the pond should result in appreciable dissolved oxygen contents.

Water flowing in a surface stream that is fully aerated with near neutral pH will generally not contain more than a few micrograms per liter (parts per billion) of dissolved iron (Hem, 1985). This is because in the presence of appreciable quantities of dissolved oxygen, the $Fe^{2+}$ is rapidly oxidized to $Fe^{3+}$ according to:

$$Fe^{2+} + 1/4\ O_2 + H^+ = Fe^{3+} + 1/2\ H_2O \quad \text{(iron oxidation)}$$

The oxidized iron is subsequently precipitated as a solid which eventually settles to the bottom of the water body. In an oxidizing environment, the iron precipitates that may form include hematite, $Fe_2O_3$, goethite, FeOOH, or other minerals having these compositions (Hem, 1985). Minerals that are freshly precipitated may have poorly developed crystal structure, and such precipitates are commonly designated as ferric hydroxide, $Fe(OH)_3$. This simplified reaction may be expressed as:

$$Fe^{3+} + 3H_2O = Fe(OH)_{3(s)} + 3H^+ \quad \text{(iron hydroxide precipitation)}$$

The liberation of $H^+$ in this reaction results in a temporary lowering of the pH of the water. However, in the carbonate-rich geochemical environments of the Wasatch Plateau and the lower-lying Mancos Shale-dominated terrains surrounding the Huntington power plant, the $H^+$ is neutralized through the dissolution of carbonate minerals according to:

$H^+ + CaCO_3 = Ca^{2+} + HCO_3^-$ (calcite dissolution)

$2H^+ + CaMg(CO_3)_2 = Ca^{2+} + Mg^{2+} + 2HCO_3$ (dolomite dissolution)

Based on this geochemical evolutionary pathway, it is considered likely that the iron in the water water piped from the Deer Creek Mine will exist in the form of solid, iron-bearing particulate matter when it blends with the well-aerated waters of the Raw Water Storage Pond.

Given the relatively large size of the Raw Water Storage Pond (336.5 acre feet, see technical civil plan Drawing #L-22113 transmitted by PacifiCorp), it is considered likely that there will be sufficient water retention time in the pond such that most or all of the solid iron hydroxide precipitates will settle to the bottom of the pond. However, it is noted that the performance of a rigorous engineering analysis of the particulate settling potential is beyond the scope of this investigation.

Currently (prior to the pumping of any Deer Creek Mine discharge water to the Raw Water Storage Pond), suspended sediments present in the diverted Huntington Creek surface water are allowed to settle to the bottom of the pond where they are periodically removed from the pond as necessary. The removed sediments are disposed of at a State approved landfill. As discussed previously, the iron that is contained in the diverted Huntington Creek surface water is believed to exist as naturally occurring solid particulate matter in the stream (likely composed predominantly of silt and clay).

**Iron Blending Sensitivity Analysis**

In order to quantify the iron contribution of discharge from the Rilda Canyon portals at the Deer Creek Mine, PacifiCorp evaluated the post mine closure contribution of total iron to the mine discharge based on a series of inputs (refer to Deer Creek Mine permit Volume 12, R645-700 Hydrology, Appendix D – Post Mine Closure Hydrologic Analysis, Iron Blending Sensitivity Analysis). Depending on the assumptions for input

parameters used, initial total iron concentrations in the Deer Creek Mine discharge water are projected to range from 0.6 mg/L to 2.12 mg/L. Projected total iron concentrations two years after mine closure ranged from 0.48 mg/L to 1.50 mg/L. Projected total iron concentration four years after mine closure range from 0.38 mg/L to 0.91 mg/L.

**Sediment Transported to Raw Water Pond**

PacifiCorp analyzed the potential sediment and total iron contribution to the Raw Water Pond based on actual flow data and water quality analysis of Huntington Creek surface water and Deer Creek Mine intercepted groundwater (refer to Deer Creek Mine permit Volume 12, R645-700 Hydrology, Appendix D – Post Mine Closure Hydrologic Analysis, Sediment/Goethite Production Huntington Plant Raw Water Pond). These calculations project the amounts of both sediment yield to the Raw Water Pond from the diverted Huntington Creek water (calculated using the average total suspended solids concentrations and the average flow rate of Huntington Creek water diverted to the pond), and the amounts of total iron (expressed as an equivalent amount of the mineral goethite, FeOOH) calculated from the average total iron concentrations and discharge rates of groundwater from the Deer Creek Mine piped to the Huntington Power Plant Raw Water Pond. The quantities of suspended sediment and goethite loading calculated by PacifiCorp are presented both in terms of tons per day and cubic yards per year. These results are as follows:

| | Assumptions | Load - Tons per day | Load - Cubic yards per year |
|---|---|---|---|
| Sediment yield (TSS) from diverted Huntington Creek water | Huntington Creek diversion rates ranging from 6,700 to 9,700 gpm Average TSS of 35 mg/L | 1.4 to 2.0 | 254 to 367 |
| Total iron yield from Deer Creek Mine discharge - expressed as equivalent amount of goethite mineral | Deer Creek Mine, Rilda Canyon portals discharging at 300 gpm, Total iron concentration of 1.3 mg/L | 0.004 | 0.3794 |

It is notable from these projections that the relative amount of iron hydroxide (goethite) mineral transported annually to the pond from the Deer Creek Mine discharge is not large. As the geochemistry of iron hydroxide mineral formation is complex, it is acknowledged that a determination of the exact mineral form and density of the precipitated iron hydroxide mineral is beyond the scope of this this investigation. However, regardless of the specific mineral form and density that is actually present, the quantity of the precipitated substance would likely be small relative to the sediment in the pond that is derived from suspended solids in the diverted Huntington Creek water.

It is calculated that the contribution of iron hydroxide (expressed as goethite) from the discharge of Deer Creek Mine water to the Raw Water Pond is very small relative to the total sediment loading to the Huntington Power Plant Raw Water Pond. These percentages are as follows:

| | Percentage of total contribution to sediment/particulate loading in the Huntington Power Plant Raw Water Storage Pond |
|---|---|
| Sediment loading to pond from Huntington Creek (from TSS) | 99.85 to 99.90 |
| Iron hydroxide (goethite) loading to pond from Deer Creek Mine discharge | 0.1 to 0.15 |

Based on these considerations, it is concluded that while considerable quantities of sediment will likely accumulate in the Raw Water Pond from the diverted Huntington Creek water (as has been the case historically), the contribution of additional sediment to the pond as a result of iron hydroxide particulates contained in the Deer Creek Mine discharge water conveyed through the Deer Creek pipeline will likely be relatively minor. Thus, the material that will accumulate on the bottom of the Huntington Power Plant Raw Water Pond will likely consist of a mixture that is predominantly (greater than 99.8

percent) naturally occurring stream sediment from Huntington Creek (mostly silt and clay particles) together with small amounts of fine-grained iron hydroxide precipitate.

The accumulating sediments will be cleaned from the pond as necessary and the removed sediments will be disposed of in a State approved landfill. Any cleaning of the pond will be the responsibility of the Huntington Plant.

**Likely Fate of Iron from Deer Creek Mine Discharge**

As discussed previously, it is anticipated that the iron present in the Huntington Power Plant Raw Water Storage Pond will exist primarily as solid iron hydroxide particulate matter, with little or no measureable dissolved iron being present in oxygenated pond waters. Transport of the particulate matter away from the pond towards underlying groundwater systems or Huntington Creek surface waters is not anticipated, primarily because of the inability of solid particulates to move through the clay liner material. Further, transport of solid iron hydroxide particulates through the saturated or unsaturated alluvial deposits surrounding the pond is not considered likely due to the presence of fine-grained sediments within the local alluvial materials that are commonly associated with the Mancos Shale. These deposits would likely filter particulate material from flowing groundwater, preventing the migration of particulate material away from the site.

**References Cited**

Hem, 1985, Study and Interpretation of the Chemical Characteristics of Natural Water, United States Geological Survey Water-Supply Paper 2254.

Utah Division of Oil, Gas and Mining, 2017, Utah Coal Mining Water Quality Database, available on-line at http://linux3.ogm.utah.gov/WebStuff/wwwroot/wqdb.html.

Please feel free to contact me should you have any questions in this regard.

Sincerely,

Erik C. Petersen, P.G.
Principal Hydrogeologist
Utah PG #5373615-2250

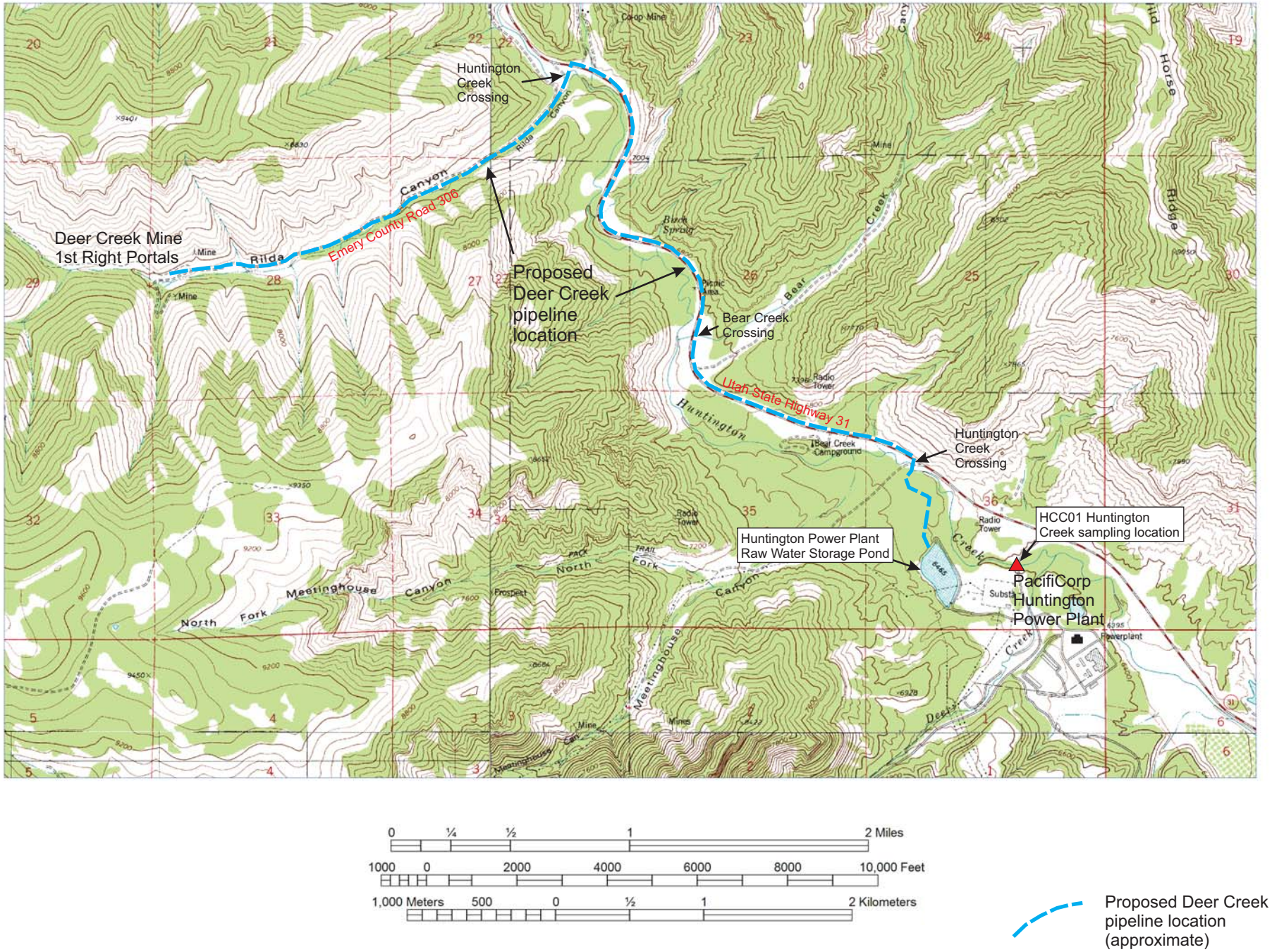


Figure 1 Study area location map.

**Table 1 Geochemical characteristics of water sources**

*Huntington Creek above Deer Creek (HCC01) - Average 1999-2016*

| | |
|---|---|
| Temperature (°C) | 7.4 |
| pH | 8.4 |
| Dissolved oxygen (mg/L) | 9.3 |
| Total suspended solids (Mg/L) | 35 |
| Total dissolved solids (mg/L) | 264 |
| Iron (total mg/L) | 0.48 |
| Iron (dissolved mg/L) | <0.03 |

*Deer Creek Mine Rilda Canyon portals (11th - 17th West seals sample, 7/12/2016)*

| | |
|---|---|
| Temperature (°C) | 13.4 |
| pH | 7.66 |
| Dissolved oxygen (mg/L) | --- |
| Total suspended solids (Mg/L) | --- |
| Total dissolved solids (mg/L) | 489 |
| Iron (total mg/L) | 1.35 |
| Iron (dissolved mg/L) | <0.03 |

# Analysis Report

August 16, 2016

**PACIFICORP**
FIELD OFFICE
PO BOX 1005
HUNTINGTON UT 84528



| | | | |
|---|---|---|---|
| Client Sample ID: | 11W-17W SEALS | Sample ID By: | PacifiCorp |
| Date Sampled: | Jul 12, 2016 | Sample Taken By: | CAS KSF |
| Date Received: | Jul 12, 2016 | Time Received: | 1325 |
| Product Description: | WATER | Time Sampled: | 1021 |
| | | Location: | 11W-17W SEALS |
| | | Mine: | 4 |
| | | Field - pH: | 7.66 pH units |
| | | Field - Conductivity: | 929 UMHOS/CM |
| | | Field - Temperature: | 13.4 DEG. C |

Comments: Dissolved Metals Filtered at Lab: Total Selenium 200.8 Analyzed at A.W.A.L.

**SGS Minerals Sample ID: 782-1638403-001**

| TESTS | RESULT | UNIT | METHOD | REPORTING LIMIT | ANALYZED DATE | ANALYZED TIME | ANALYST |
|---|---|---|---|---|---|---|---|
| Hardness, mg equivalent CaCO3/L | 304 | mg/L | SM2340-B | 1 | 2016-07-26 | 12:00:00 | HF |
| Acidity | <5 | mg/L | D1067 | 5 | 2016-06-30 | 15:00:00 | MS |
| Anions | 9.48 | meq/L | SM1030E | 0 | 2016-07-26 | 12:00:00 | HF |
| Balance | -2.24 | % | SM1030E | -10 | 2016-07-26 | 12:00:00 | HF |
| Cations | 9.07 | meq/L | SM1030E | 0 | 2016-07-26 | 12:00:00 | HF |
| Alkalinity, mg CaCO3/L (pH 4.5) | 362 | mg/L | SM2320-B | 5 | 2016-07-19 | 10:00:05 | MS |
| Bicarbonate Alkalinity as CaCO3 | 362 | mg/L | SM2320-B | 5 | 2016-07-19 | 10:00:05 | MS |
| Carbonate Alkalinity as CaCO3 | <5 | mg/L | SM2320-B | 5 | 2016-07-19 | 10:00:05 | MS |
| Nitrogen, Ammonia | 3.9 | mg/L | SM4500-B-D | 0.1 | 2016-07-25 | 07:30:00 | MS |
| pH | 7.39 | | SM4500-H | 0.01 | 2016-07-03 | 09:00:00 | MS |
| pH Temperature | 20.00 | °C | SM4500-H | 0.01 | 2016-07-03 | 09:00:00 | MS |
| Conductivity | 842 | µmhos/cm | SM2510 | 0.1 | 2016-07-21 | 11:37:32 | MS |
| Total Dissolved Solids | 489 | mg/L | SM2540-C | 30 | 2016-07-14 | 14:30:00 | MS |
| Nitrate | <0.05 | mg/L | EPA 300.0 | 0.05 | 2016-07-13 | 12:00:00 | HF |
| Nitrite | <0.05 | mg/L | EPA 300.0 | 0.05 | 2016-07-13 | 12:00:00 | HF |
| Chloride, Cl | 11 | mg/L | EPA 300.0 | 1 | 2016-07-13 | 12:00:00 | HF |
| Sulfate, SO4 | 93 | mg/L | EPA 300.0 | 1 | 2016-07-13 | 12:00:00 | HF |
| Ortho-Phosphate-P | <0.05 | mg/L | EPA 300.0 | 0.05 | 2016-07-13 | 12:00:00 | HF |
| Mercury, Hg - Total | <0.2 | µg/L | EPA 245.1 | 0.2 | 2016-08-04 | 07:00:00 | HF |

METALS BY ICP

Lab Supervisor

Domenic Ibanez
Lab Supervisor

SGS North America Inc. | Minerals Services Division
2035 North Airport Road Huntington UT 84528 t (435) 653-2311 f (435)-653-2436 www.sgs.com/minerals

Member of the SGS Group (Société Générale de Surveillance)

*This document is issued by the Company under its General Conditions of Service accessible at http://www.sgs.com/terms_and_conditions.htm. Attention is drawn to the limitation of liability, indemnification and jurisdiction issues defined therein.*

*Any holder of this document is advised that information contained hereon reflects the Company's findings at the time of its intervention only and within the limits of Client's instructions, if any. The Company's sole responsibility is to its Client and this document does not exonerate parties to a transaction from exercising all their rights and obligations under the transaction documents. Any unauthorized alteration, forgery or falsification of the content or appearance of this document is unlawful and offenders may be prosecuted to the fullest extent of the law.*

SGS

# Analysis Report

August 16, 2016

**PACIFICORP**
FIELD OFFICE
PO BOX 1005
HUNTINGTON UT 84528



| | | | |
|---|---|---|---|
| Client Sample ID: | 11W-17W SEALS | Sample ID By: | PacifiCorp |
| Date Sampled: | Jul 12, 2016 | Sample Taken By: | CAS KSF |
| Date Received: | Jul 12, 2016 | Time Received: | 1325 |
| Product Description: | WATER | Time Sampled: | 1021 |
| | | Location: | 11W-17W SEALS |
| | | Mine: | 4 |
| | | Field - pH: | 7.66 pH units |
| | | Field - Conductivity: | 929 UMHOS/CM |
| | | Field - Temperature: | 13.4 DEG. C |

Comments: Dissolved Metals Filtered at Lab: Total Selenium 200.8 Analyzed at A.W.A.L.

**SGS Minerals Sample ID: 782-1638403-001**

| TESTS | RESULT | UNIT | METHOD | REPORTING LIMIT | ANALYZED DATE | ANALYZED TIME | ANALYST |
|---|---|---|---|---|---|---|---|
| **METALS BY ICP (continued)** | | | | | | | |
| Aluminum, Al - Dissolved | 0.04 | mg/L | EPA 200.7 | 0.03 | 2016-07-19 | 10:00:00 | HF |
| Arsenic, As - Dissolved | <0.01 | mg/L | EPA 200.7 | 0.01 | 2016-07-19 | 10:00:00 | HF |
| Arsenic, As - Total | <0.01 | mg/L | EPA 200.7 | 0.01 | 2016-08-03 | 10:23:19 | HF |
| Boron, B - Total | 0.22 | mg/L | EPA 200.7 | 0.01 | 2016-08-03 | 10:23:19 | HF |
| Cadmium, Cd - Dissolved | <0.001 | mg/L | EPA 200.7 | 0.001 | 2016-07-19 | 10:00:00 | HF |
| Cadmium, Cd - Total | <0.001 | mg/L | EPA 200.7 | 0.001 | 2016-08-03 | 10:23:19 | HF |
| Calcium, Ca - Dissolved | 57.96 | mg/L | EPA 200.7 | 0.03 | 2016-07-19 | 10:00:00 | HF |
| Chromium, Cr - Total | 0.005 | mg/L | EPA 200.7 | 0.001 | 2016-08-03 | 10:23:19 | HF |
| Copper, Cu - Dissolved | <0.01 | mg/L | EPA 200.7 | 0.01 | 2016-07-19 | 10:00:00 | HF |
| Copper, Cu - Total | <0.01 | mg/L | EPA 200.7 | 0.01 | 2016-07-14 | 13:00:00 | HF |
| Iron, Fe - Total | 1.35 | mg/L | EPA 200.7 | 0.05 | 2016-07-14 | 13:00:00 | HF |
| Iron, Fe - Dissolved | <0.03 | mg/L | EPA 200.7 | 0.03 | 2016-07-19 | 10:00:00 | HF |
| Lead, Pb - Dissolved | <0.01 | mg/L | EPA 200.7 | 0.01 | 2016-07-19 | 10:00:00 | HF |
| Lead, Pb - Total | <0.01 | mg/L | EPA 200.7 | 0.01 | 2016-07-14 | 13:00:00 | HF |
| Magnesium, Mg - Dissolved | 38.76 | mg/L | EPA 200.7 | 0.01 | 2016-07-19 | 10:00:00 | HF |
| Manganese, Mn - Total | 0.020 | mg/L | EPA 200.7 | 0.002 | 2016-07-14 | 13:00:00 | HF |
| Manganese, Mn - Dissolved | 0.018 | mg/L | EPA 200.7 | 0.002 | 2016-07-19 | 10:00:00 | HF |
| Molybdenum, Mo - Dissolved | 0.011 | mg/L | EPA 200.7 | 0.005 | 2016-07-19 | 10:00:00 | HF |
| Nickel, Ni - Total | 0.037 | mg/L | EPA 200.7 | 0.001 | 2016-07-14 | 13:00:00 | HF |
| Potassium, K - Dissolved | 10.40 | mg/L | EPA 200.7 | 0.14 | 2016-07-19 | 10:00:00 | HF |

Lab Supervisor

Domenic Ibanez
Lab Supervisor

SGS North America Inc. | Minerals Services Division
2035 North Airport Road Huntington UT 84528 t (435) 653-2311 f (435)-653-2436 www.sgs.com/minerals

Member of the SGS Group (Société Générale de Surveillance)

*This document is issued by the Company under its General Conditions of Service accessible at http://www.sgs.com/terms_and_conditions.htm. Attention is drawn to the limitation of liability, indemnification and jurisdiction issues defined therein.*

*Any holder of this document is advised that information contained hereon reflects the Company's findings at the time of its intervention only and within the limits of Client's instructions, if any. The Company's sole responsibility is to its Client and this document does not exonerate parties to a transaction from exercising all their rights and obligations under the transaction documents. Any unauthorized alteration, forgery or falsification of the content or appearance of this document is unlawful and offenders may be prosecuted to the fullest extent of the law.*

# PacifiCorp

# Deer Creek Mine

# C/015/0018

**Amendment to Add a Post-Mining Water Discharge at Rilda Canyon Portals, Permit Area Change to Include Discharge Pipeline Route and Potential Treatment Facility Area, PacifiCorp, Deer Creek Mine, C/015/0018, Emery County, Utah**

**<u>Volume 12, R645-301-700 Hydrology, Appendix E</u>**

**Add Appendix E**

# DEER CREEK MINE

# VOLUME 12

# MILL FORK LEASE

**R645-301-700**

**HYDROLOGY**

# APPENDIX D

**DEER CREEK MINE CLOSURE WATER PIPELINE**

- **UTU-91700 and PRI-1606 – Final Environmental Assessment**
  - **Final Environmental Assessment**
  - **Draft FONSI**
  - **Hydrology Report**
  - **Peterson Hydrology Report**
  - **Biological Resource Report**

# DEER CREEK MINE

# VOLUME 12

# MILL FORK LEASE

**R645-301-700**

**HYDROLOGY**

# APPENDIX E

**DEER CREEK MINE CLOSURE WATER PIPELINE**

- **UTU-91700 and PRI-1606 – Final Environmental Assessment**
  - **Final Environmental Assessment**

# United States Department of the Interior
# Bureau of Land Management

**Environmental Assessment**

**DOI-BLM-UT-G021-2016-0029-EA**

**September 2016**

# Deer Creek Mine Closure Water Pipeline
# UTU-91700 and PRI-1606

***Location:*** Rilda and Huntington Canyons, Emery County, Utah
T. 16 S, R. 7 E, Sections 22, 23, 26, 27, 28, 29, 25, 35, and 36

***Applicant/Address:*** PacifiCorp
1407 West North Temple
Salt Lake City, UT 84116


Price Field Office
125 South 600 West
Price, Utah 84501
Phone: (435) 636-3600
FAX: (345) 636-3657

Manti-La Sal National Forest
599 West Price River Drive
Price, UT 84501
(435) 636-3596
(435) 637-4940

# Table of Contents

Chapter 1. Introduction and Need for the Proposed Action ..... 1
1.1 Introduction ..... 1
1.2 Background ..... 1
1.3 Agencies' Purpose and Need for the Proposed Action ..... 2
1.4 Conformance with BLM Land Use Plan ..... 3
1.5 Conformance with FS Land Use Plan ..... 4
1.6 Relationships to Statutes, Regulations, and Other Plans ..... 4
1.7 Identification of Issues ..... 5
1.7.1 Public Scoping ..... 6
1.7.2 Internal Scoping ..... 6
1.7.3 Public comments ..... 6
1.7.4 Issues ..... 6
1.7.5 Issues Considered but Eliminated from Further Analysis ..... 7
Chapter 2. Description of Alternatives ..... 8
2.1 Introduction ..... 8
2.2 Proposed Action ..... 8
2.3 No Action ..... 10
2.4 Alternatives Considered but Not Analyzed in Detail ..... 10
Chapter 3. Affected Environment ..... 12
3.1 Introduction and General Setting ..... 12
3.1.1 General Description ..... 12
3.1.2 Resources Brought Forward for Analysis ..... 12
Chapter 4. Environmental Impacts ..... 16
4.1 Introduction ..... 16
4.2 Direct and Indirect Impacts ..... 16
4.2.1 Proposed Action ..... 16
4.2.2 No Action ..... 19
4.3 Cumulative Impacts ..... 19
4.3.1 Introduction ..... 19
4.3.2 Past, Present, and Reasonably Foreseeable Actions ..... 19
4.3.3 Cumulative Impacts ..... 20
Chapter 5. Persons, Groups, and Agencies Consulted ..... 23
5.1 Persons, Agencies, and Organizations Consulted ..... 23
5.2 List of Preparers ..... 23
Chapter 6. References ..... 24

Chapter 7. Acronyms and Abbreviations ..... 25

## List of Appendices

Appendix A. Maps
Appendix B. Interdisciplinary Team Checklists
Appendix C. Response to Scoping Comments
Appendix D. Plan of Development (POD)
Appendix E. Biological Assessment and Biological Evaluation
Appendix F. Visual Contrast Rating Worksheet

# Deer Creek Mine Closure Water Pipeline
# UTU-91700 and PRI-1606

**DOI-BLM-UT-G021-2016-0029-EA**

# Chapter 1. Introduction and Need for the Proposed Action

## 1.1 Introduction

The Bureau of Land Management (BLM) Price Field Office and Forest Service (FS) Manti-La Sal National Forest have received a Title V right-of-way application from PacifiCorp for a buried water pipeline from the Deer Creek Mine to settling ponds at the Huntington Power Plant. The proposed pipeline would be located in T. 16 S, R. 7 E, Sections 22, 23, 26, 27, 28, 29, 35, and 36 (see Map 1 in Appendix A).

## 1.2 Background

The Deer Creek Mine has completed active coal mining and is undergoing mine closure procedures. As part of the closure procedures, the mine must address the management of intercepted groundwater. Deer Creek Mine is projected to have permanent post-mine gravity discharges at Deer Creek Canyon portals (south half of mine), and at Rilda Canyon portals (north half of mine) after final mine closure.

The last day of production at Deer Creek Mine was January 7, 2015. Efforts began immediately to prepare the mine for closure, including mining equipment removal. By mid-April of 2015, nearly all of the mining equipment, including conveyor belt lines, had been removed, and permission had been granted by the lease holder (BLM) to enable permanent sealing of the south half and northwest quadrant of the mine. The Rilda Canyon portals are still open with intact power, ventilation, and water systems, which allows for operation of pumps to direct intercepted groundwater to Deer Creek Canyon portals, and prevents water from discharging out of the Rilda Canyon portals; however, this method of water management prevents final closure of the mine.

Deer Creek Canyon portals are within a drainage defined as Category 2 waters, whereas Rilda Canyon portals are within Category 1 waters, per UAC R317-2. Definitions of these categories are as follows:

- Category 1 Waters: Waters which have been determined by the Board to be of exceptional recreational or ecological significance or have been determined to be a State or National resource requiring protection, shall be maintained at existing high quality through designation, by the Board after public hearing, as Category 1 Waters. **New point source discharges of wastewater, treated or otherwise, are prohibited in such segments after the effective date of designation.**
- Category 2: Waters are designated surface water segments which are treated as Category 1 Waters except that a point source discharge may be permitted provided that the discharge does not degrade existing water quality.

PacifiCorp currently has two permitted outfalls for Deer Creek Mine, both in Deer Creek Canyon. No discharge permits have been or will be issued for the Rilda Canyon portals because point source discharges within Category 1 waters are prohibited. Intercepted groundwater must be conveyed outside of Category 1 waters in order to be discharged. Therefore, appropriate management of the intercepted groundwater must be established to allow for the mine to cease operations, seal the mine, and complete the reclamation process as set forth in the Utah Division of Oil, Gas and Mining (UDOGM) permit and FS regulations.

Since the announcement of the Deer Creek Mine closure in December of 2014, PacifiCorp has designed and applied for mine closure approval from various government agencies to prevent a prohibited post-mine gravity discharge of water from the portals located in Rilda Canyon. The original preferred plan was to build water-retaining bulkheads to contain all of the intercepted groundwater in the underground mine workings in perpetuity. Efforts undertaken since late 2014 to obtain permission from the Mine Safety and Health Administration (MSHA) and the UDOGM to permanently retain intercepted groundwater underground with concrete bulkheads and possibly to direct overflow water to the Deer Creek Canyon were rejected in April of 2016. MSHA and UDOGM will not allow any water retention as part of the Deer Creek closure plans; water must be directed to the portals to flow unimpeded out of the mine. This response by the agencies necessitates that PacifiCorp develop other alternatives to manage intercepted groundwater that would otherwise discharge from the Rilda Canyon portals in violation of UAC R317-2.

Water that would discharge from the Rilda Canyon portals has total iron that is elevated above background levels. Mining in the northwest quadrant of the mine encountered an elevated sulfur zone in the form of pyrite (FeS2) in the lower portion of the coal seam. Water accumulating in the northwest quadrant of the mine comes in contact with a high-sulfur/high-iron zone, which causes the water to dissolve total iron that is elevated above background levels. This water must be settled to allow the iron to precipitate; once the iron has settled out, no other treatment is needed for the intercepted groundwater to meet water quality standards. The water can be used or discharged in accordance with existing permits or policy.

The level of iron in the groundwater is anticipated to dissipate over a period of time to background levels of typical intercepted groundwater, and settling would no longer be required. The volume of the intercepted groundwater would likely follow a similar trend, slowly dissipating due to the lack of recharge, from the initial projection of approximately 600 gallons per minute (gpm) to 200 gpm. Management of water from the mine would be required as long as the flow of intercepted groundwater continued.

## 1.3 Agencies' Purpose and Need for the Proposed Action

The purpose of the action is to determine whether to authorize a pipeline right-of-way within existing road rights-of-way on public lands to provide conveyance of mine water from the Rilda Canyon portals to settling ponds at the Huntington Power Plant at the mouth of Huntington Canyon. The purpose of the pipeline is to provide for conveyance of the intercepted groundwater to a permitted discharge location outside of Category 1 waters, which will allow for final closure and reclamation of the mine, and to avoid potential contamination of the water resources on federal lands due to water with high levels of iron filling the mine and naturally flowing out of the portals in Rilda Canyon.

The need for both BLM and FS is established by the agencies' responsibilities under the Federal Land Policy and Management Act (FLPMA) to respond to PacifiCorp's application for a Title V right-of-way. The BLM and FS have a statutory obligation to evaluate and respond to the SF-299 application according to 43 Code of Federal Regulations (CFR) 2800 and 36 CFR 251.54, respectively. The agencies must respond to the proposal in accordance with the objectives of their Land Use Plans, and fulfill their regulatory responsibilities to manage public lands for multiple uses. This EA provides a

project-level analysis that is not intended to re-examine the basic land use allocations made in the Land Use Plans, nor propose broad changes in land use allocations. The regulations require that the activities be conducted, insofar as possible, in a manner which minimizes adverse impacts to natural resources and lands administered by the agencies.

As stated under 43 CFR 2801.2, "it is the BLM's objective to grant rights-of-ways to any qualified individual, business, or government entity and to direct and control the use of rights-of-way on public lands."

Forest Service Manual (FSM) 2703.2 states that use of National Forest System lands may be authorized if "the proposed use is consistent with the mission of the Forest Service to manage National Forest System lands and resources in a manner that will best meet the present and future needs of the American people, taking into account the needs of future generations for renewable and nonrenewable resources, including, but not limited to, recreation, range, timber, minerals, watershed, wildlife and fish, and natural scenic, scientific, and historical values; and the proposed use cannot reasonably be accommodated on non-National Forest System lands."

The BLM and FS would decide whether or not to grant the right-of-way, and if so, under what terms and conditions. The agencies will make separate decisions for implementation of the proposal based on the environmental analysis.

## 1.4 Conformance with BLM Land Use Plan

Land use decisions for the project area are contained in the Price Field Office Record of Decision and Approved Resource Management Plan (RMP), approved in 2008. Specifically, the proposed action conforms to the following RMP decisions:

As stated in the RMP (pg. 66), the BLM's goals for soil, water, and riparian resources are:

- Manage uses to minimize and mitigate damage to soils, including critical soils and biological soil crusts.
- Prevent excessive soil erosion.
- Maintain or restore the chemical, physical, and biological integrity of the area's soil and waters.

Specific soil, water, and riparian management decisions pertinent to this proposal include:

- Manage resources to improve streams listed as water quality limited and prevent listing of additional streams under the Clean Water Act, Section 303(d).
- Manage resources to maintain or restore overall watershed health and reduce erosion, stream sedimentation, and salinization of water according to 43 CFR 4180 through watershed assessments.
- Manage resources to reduce salinity loading where possible in accomplishing the goals and objectives outlined in the Colorado River Basin Salinity Control Act.
- Maintain and enhance water-dependent natural resource values.
- Maintain and/or enhance riparian areas (Utah Riparian Management Policy 2005) through project design features and/or stipulations that protect riparian resources.
- Protect floodplains pursuant to Executive Order (EO) 11988 and avoiding disturbance in floodplains.

- Implement management actions to ensure that sufficient quantity, quality, and timing of water is present to support water-dependent resource values, including fisheries, riparian communities, wetland communities, aquatic insects, terrestrial wildlife, and migratory/non-migratory birds.
- Implement management actions to ensure that sufficient quantity, quality, and timing of water is present to support human and economic uses of water on public lands, including livestock grazing, recreation, forestry, and mineral development

As stated in the RMP (pg. 115), the BLM's primary management objectives for the lands and realty programs are to:

- Make public lands available through ROWs or leases for such purposes as transportation routes, utilities, transmission lines, and communication sites, in coordination with other resource goals.
- Maintain and acquire public access to meet resource management needs.
- Make public lands available to meet the needs for smaller ROWs (e.g., roads or pipelines for oil fields).

Specific lands and realty management decisions pertinent to this proposal include:

- LAR-28: Additional ROWs will be granted consistent with RMP goals and objectives.

## 1.5 Conformance with FS Land Use Plan

The proposed action is in conformance with the Manti-La Sal Land and Resource Management Plan (LRMP) approved in 1986, as amended.

FS lands are generally available to occupancy, where such is in the public interest, except where occupancy is specifically prohibited through legislation of administrative decision (LRMP, p. II-57).

The proposed project crosses management areas GWR (general big game winter range), MMA (leasable minerals area), and RNG (range forage production). These areas are identified in Map 2 in Appendix A.

The following Management Direction, as well as others not listed, applies:

- Consider special-use applications and permits on the basis of relative benefit to the public and individual need (LRMP, p. III-5).
- Utilities and other special uses will be considered in suitable areas and/or corridors based on need and overall benefit (LRMP, p. III-13).

Under Forest-wide Direction, the proposed action would conform to:

- Act on special-use applications according to the following priorities: A. Land and use activity requests relating to public safety, health, and welfare, e.g., highways, powerlines and public service improvements (LRMP, Special-Use Management, Non-Recreation, J01, p. III-37).

## 1.6 Relationships to Statutes, Regulations, and Other Plans

This EA was prepared in accordance with the National Environmental Policy Act (NEPA) of 1969 and in compliance with all applicable regulations and laws passed subsequently, including the President's Council on Environmental Quality (CEQ) regulations, the U.S. Department of Interior

requirements and guidelines listed in the BLM Manual Handbook H-1790-1, and Forest Service Handbook (FSH) 1909.15.

The right-of-way grant would be processed pursuant to Title V of the Federal Land Policy and Management Act (FLPMA) of 1976, as amended {43 U.S.C 1761} and would be subject to the terms and conditions set forth in 43 CFR 2800. The Title V right-of-way would also be consistent with the Rangeland Health Standards and Guidelines (43 CFR 4100, subsection 4180) and Native American Trust Resource policies.

The proposed project is also consistent with the Emery County General Plan (2012), which generally supports mitigation for mineral and energy resource extraction, multiple use-sustained yield concepts, and providing adequate water quality.

A general listing of agencies that could be involved in the implementation of the proposed action, and their respective regulatory authority, is provided below in Table 1-1.

**Table 1-1. Permits, Approval, and Authorizing Actions Required for the Proposed Action**

| Issuing Agency/Permit Name or Authorizing Action | Nature of Permit/Approval | Regulatory Authority (If appropriate) |
|---|---|---|
| **Advisory Council on Historic Preservation (ACHP)** | | |
| Cultural Resource Compliance | Protects cultural & historic resources; coordinated with Utah State Historic Preservation Office (SHPO) | National Historic Preservation Act (NHPA), Section 106. |
| **Bureau of Land Management** | | |
| Antiquities, cultural, & historic resource permits | Inventory, excavate, or remove cultural and historic resources from federal lands | Antiquities Act of 1906 (16 U.S.C. 431-433); Archaeological Resources Protection Act of 1979 (16 U.S.C. 470aa-470.11), 43 CFR Part 3. |
| ROW Grants & Temporary Use Permits | Authorizes land uses on federal lands | FLPMA (43 U.S.C. 1761-1771), 43 CFR 2800. |
| **Forest Service** | | |
| Special Use Permit | Authorizes land uses on federal lands | FLPMA (43 U.S.C. 1761-1771), FSM 2700. |
| **State of Utah** | | |
| State Historic Preservation Office (SHPO) | Consult on Section 106 compliance; approves cultural resource clearances; provides protection of cultural resources | Archaeological Resources Protection Act of 1979 |

## 1.7 Identification of Issues

The scoping process for this EA was conducted in accordance with BLM and FS regulations and guidance. This scoping process included involvement and participation by interested persons, other

government agencies, and BLM and FS resource specialists. Based on the results of this scoping process, key issues were identified that require assessment in this EA.

### 1.7.1 Public Scoping

A scoping letter describing the proposed project and soliciting comments was sent by the FS, in cooperation with the BLM, to interested parties on June 13, 2016. These parties included local, state, and federal agencies, non-governmental organizations (NGOs), and the general public. On June 14, 2016, a legal notice of proposed action and request for comments was published in the Sun Advocate newspaper. The public comment period for scoping closed on July 14, 2016. The legal notice is the document that sets the comment period, which identifies those individuals or organizations that have objection rights for FS decisions.

In addition, the BLM listed the project information on the ePlanning website, and the FS listed the EA scoping information on the Schedule of Proposed Action (SOPA) website.

### 1.7.2 Internal Scoping

Internal scoping with BLM and FS resource specialists was conducted prior to public scoping. This process was also used to identify issues for analysis in the EA, and is summarized in the Interdisciplinary Team (IDT) checklists (Appendix B).

### 1.7.3 Public comments

One unique comment letter was received on behalf of Heal Utah and the Sierra Club, and over 787 form letters were submitted electronically within the established 30-day comment period. A summary of comments received during public scoping is included as Appendix C.

### 1.7.4 Issues

An issue is a point of debate, dispute, or disagreement regarding anticipated effects of implementing the proposed action. CEQ regulations at 40 CFR §§1500.4 and 1501.7 require that the EA focus on issues that are key to the proposed action. Key issues are directly or indirectly caused by the proposed action and may lead to the development of alternative actions or other mitigation.

Non-key issues are defined as being: 1) outside the scope of the project; 2) already decided by law, regulation, or policy; 3) irrelevant to the decision; or 4) conjectural and not supported by scientific or factual evidence. Issues were identified based on the scoping process described above. These issues were categorized as key issues based on the CEQ regulations.

Based on the agencies' responses as documented in the IDT checklists (Appendix B), the issues being carried forward in this EA for analysis are associated with resources that may be affected by the proposed action. Additionally, the rationale for not carrying resources forward in this EA are also documented in the checklists.

The following resources are being carried forward for analysis in this EA:

| | | | |
|---|---|---|---|
| Cultural Resources | Designated Areas | Water Resources | Recreation Resources |
| Native American Religious Concerns/Values | Soil Resources | Visual Resources | Wildlife Resources |

***Cultural Resources/Native American Religious Concerns/Values***

- Would the project impact cultural resources?

***Designated Areas: National Trails and Backways***

- Would the project adversely impact the Energy Loop National Scenic Byway?

***Recreation Resources***

- Would the project adversely impact recreation associated with the Energy Loop National Scenic Byway or adjacent recreation areas?

***Soil Resources***

- Would the project adversely impact soil resources?

***Visual Resources***

- Would the project adversely impact visual resources?

***Water Resources***

- Would the project adversely impact water resources?

***Wildlife Resources***

- Would the project affect habitat effectiveness for big game?
- Would the project adversely impact FS sensitive species?
- Would the project affect FS management indicator species (MIS) population trends?
- Would the project adversely affect migratory birds?

### 1.7.5 Issues Considered but Eliminated from Further Analysis

Other resource issues were considered, but were eliminated from further analysis as documented in the IDT checklists (Appendix B).

# Chapter 2. Description of Alternatives

## 2.1 Introduction

This section describes the range of alternatives to be addressed in the environmental analysis. A range of alternatives were considered and objectively evaluated by the BLM and FS interdisciplinary teams. Alternatives that were determined not to meet the reasonable standards were eliminated from further analysis.

## 2.2 Proposed Action

PacifiCorp proposes to construct 5.6 miles of a 10-inch high-density polyethylene (HDPE) gravity flow water pipeline from the Deer Creek Mine 1st Right Portals in Rilda Canyon to settling ponds at the Huntington Power Plant. The pipeline would be constructed mostly within the existing road rights-of-way; within Emery County Road #306 right-of-way for about 11,835 feet (2.2 miles), and within the State Route (SR)-31 right-of-way (UTU-0-17187) for about 14,606 feet (2.8 miles). The route was selected to minimize new disturbance in Rilda and Huntington Canyons. Approximate pipeline lengths by landownership are shown in Table 2-1.

**Table 2-1. Length of proposed pipeline right-of-way**

| Landownership | Total length |
|---|---|
| FS | 9,622 feet (1.8 mi) |
| BLM | 6,388 feet (1.2 mi) |
| Private | 13,518 feet (2.6 mi) |
| **Total** | 29,528 feet (**5.6 mi**) |

Because the pipeline must be offset from parallel culinary pipelines by a minimum distance of 10 feet as specified by the State of Utah regulations (UAC R317-401-5), the proposed pipeline would be installed on the northeast side of SR-31. The proposed permanent right-of-way width is 12 feet centered on the pipeline, and is wholly within the road rights-of-way. An additional 20 feet of temporary right-of-way on the outer edge of the permanent right-of-way (away from the roadway) would allow for construction of the pipeline (see Map 3 in Appendix A). Estimates of area in the permanent 12-foot right-of-way, the temporary 20-foot right-of-way, and the total 32-foot area are shown in Table 2-2.

**Table 2-2. Right-of-way calculations by land status**

| Jurisdiction | Permanent 12-foot ROW (acres) | Temporary 20-foot ROW (acres) | Total 32-foot area (acres) |
|---|---|---|---|
| FS | 2.7 | 4.4 | 7.0 |
| BLM | 1.8 | 2.9 | 4.7 |
| Private | 3.7 | 6.4 | 10.1 |
| **Total** | **8.1** | **13.7** | **21.8** |

Of the total 32-foot right-of-way, approximately 2.7 acres of the temporary disturbance would occur beyond the Emery County Road #306 right-of-way. Up to 1.7 acres of new disturbance would occur on FS-administered land, and 1.0 acre of new disturbance would occur on private land. There would be no temporary disturbance beyond the SR-31 right-of-way.

The main project design features are listed below; additional detail can be found in the POD (Appendix D).

- The trench for the pipeline would be excavated with a trenching machine, track hoe excavator, or similar equipment. Topsoil and subsoil would be segregated and stockpiled separately adjacent to the trench. After the pipeline was installed, the stockpiled subsoil would be used to backfill the trench, and the topsoil would be replaced on the surface and graded to pre-disturbance contours.
- Large rocks that are unsuitable for fill would be placed on the surface within the road rights-of-way, outside of the safety clear zone. If the excavated rock contrasted with the natural surface, the contrasting material would be removed from the right-of-way and disposed of in an appropriate location off-site.
- The pipeline would include a shut-off valve at the mine entrance.
- Pipe segments would be laid out end-to-end along the trench at each active site. The pipeline segments would be about 50 feet long, and would be heat-welded together on-site.
- Bedding material would be placed in the trench below and above the pipeline. Such bedding material serves two principal functions: protection of the pipe from mechanical damage during installation and trench filling, and stabilization of the pipe in the event of seismic shifts or frost heaves.
- The pipeline would be buried with at least 5 feet of cover, except at the crossings of Huntington Creek, where the pipeline would be attached to an existing bridge or diversion structure at each crossing. The pipeline would be concealed in the existing girders under the west side of the bridge, and set on top of the diversion structure. The pipeline would not be buried at these crossing locations.
- Air vents and Carsonite posts would be installed approximately every 1,000 feet along the alignment; these features would be about 4 feet high, but would be colored to be visually unobtrusive from the roadway.
- A tracer wire and a fiber optic conduit would also be buried with the pipeline. The conduit would allow for installation of a telecommunications cable in the future without requiring excavation of the entire length of line. This fiber optic cable would allow PacifiCorp to remove the existing power line while providing communication capabilities to continue monitoring for security of the site.
- Directional drilling would be applied to install the pipeline at crossings under Emery County Road #306, SR-31, and Bear Creek and the adjacent Bear Canyon Road. The Emery County Road #306 crossings would be drilled at two locations: north and south of the Huntington River bridge (see Figure 1 in Attachment D of the POD). The SR-31 crossings would also be applied in two locations: 1) approximately 500 feet south of the SR-31 and Emery County Road #306 intersection (see Figure 1 in Attachment D of the POD), and 2) adjacent to the Huntington Power Plant diversion dam (see Figure 2 in Attachment D of the POD). These road crossings are on private land. The crossing under Bear Creek and Bear Canyon Road is on BLM-administered land (see Figure 3 in Attachment D of the POD). Drill pits would be excavated on each side of a crossing and a vacuum trailer would ensure that drilling mud did not discharge into the adjacent waters.
- No permanent roads would be constructed during project implementation. All construction activities would take place alongside and largely within the rights-of-way of existing roads.
- A stormwater pollution prevention plan (SWPPP) and spill prevention and response plan (SPRP) would be prepared and implemented to ensure compliance with the Clean Water Act during construction. Temporary erosion control measures could include sediment barriers such as silt fence or fiber rolls. Permanent erosion control measures would include trench breakers and revegetation where suitable within the road rights-of-way.

- Construction is anticipated to take 2 to 3 months in the fall and winter of 2016-2017, depending on weather conditions and other factors.
- A cultural resources discovery plan is included in the POD (Appendix D), and would be applied if cultural resources were discovered.
- Timing stipulations would be applied where appropriate to avoid potential impacts to wildlife (see section 7.b.9 of the POD [Appendix D]).
- A reclamation plan is included in the POD (Appendix D). Seeding would occur in the fall after construction to increase the likelihood of success. All disturbance areas would be monitored for noxious weeds annually, for a minimum of three growing seasons following completion of the project, or until desirable vegetation was established. If found, weeds would be treated as described in the reclamation plan.
- The intercepted groundwater from the mine would be directed into the settling ponds at the Huntington Power Plant, and used or discharged in accordance with existing permits or policy.
- After construction, PacifiCorp would maintain the right-of-way and allow the pipeline to operate continuously. The pipeline would be intended to be permanent; if the pipeline were decommissioned, it would be left in the ground to avoid further ground disturbance.

## 2.3 No Action

The no action alternative would be to deny the right-of-way application as proposed. PacifiCorp would not be allowed to construct the pipeline across federally administered lands. The Deer Creek Mine would remain open to continue pumping water until other suitable methods for management of intercepted groundwater were determined.

## 2.4 Alternatives Considered but Not Analyzed in Detail

Alternatives that were dismissed from further consideration include:

1. **Retain water in the mine for discharge at Deer Creek portals** – MSHA and UDOGM will not allow water to be retained in the mine; therefore, this alternative is not feasible.
2. **Treat the water prior to discharge at the Rilda Canyon portals** - Regardless of water quality, discharge of water at the Rilda Canyon portals is prohibited per UAC R317-2; therefore, this alternative is not feasible.
3. **Treat the water at the Rilda Canyon Portals and then pipe the water to Huntington Creek** – This alternative would require additional surface disturbance to build new settling ponds on public lands, and would still require a pipeline to convey water to a permitted discharge location per UAC R317-2. This alternative was dismissed due to the additional disturbance that would be required on public lands.
4. **Construct a pumping station at Rilda Canyon portals and pipe the water to Left Fork portals** - A pumping station would be built at the Rilda Canyon 1st Right portals. A pipeline would be installed running from this pump station to the Left Fork portals. Water discharging at the 1st Right Rilda Canyon portals would be pumped back into the mine at the Left Fork portals, where it would gravity feed into the Deer Creek Mine workings. This alternative requires a pipeline and permanent pumping facilities, namely the pump station, power lines, and communication lines, to be constructed at the mine site on FS-administered land. These facilities would require permanent periodic maintenance. Risk associated with equipment failure and discharge of non-approved and potentially non-compliant water to

Rilda Canyon is considered to be moderate. This alternative was dismissed due to the additional disturbance that would be required on public lands.

5. **Construction of a water treatment facility at the Huntington Power Plant -** A pipeline would still be required to convey intercepted groundwater to such facilities. This alternative would require additional disturbance at the Huntington Power Plan; this disturbance is not considered to be necessary as discharge can be properly managed using the existing settling ponds at the power plant. This alternative was dismissed because of the additional disturbance that is unnecessary for proper management of the water.

6. **Extension of the water pipeline to the Town of Huntington's sewer treatment plant or next closest existing treatment plant –** Similar to the alternative above, a pipeline would still be required to convey intercepted groundwater to such facilities. The closest existing treatment plant is farther down the canyon than the power plant; installation of additional pipeline length would require additional disturbance. This disturbance is not considered to be necessary as discharge can be properly managed using the existing settling ponds at the power plant. This alternative was dismissed because of the additional disturbance that is unnecessary for proper management of the water.

# Chapter 3. Affected Environment

## 3.1 Introduction and General Setting

The affected environment was considered and analyzed by the BLM and FS as documented in the IDT checklists (see Appendix B). Information and description of the affected environment contained in the BLM 2008 Price Field Office RMP and the Manti-La Sal 1986 LRMP are incorporated by reference in accordance with 40 CFR 1502.21 regulations.

The IDT checklists indicate which resources of concern are either not present in the project area or would not be impacted to a degree that requires detailed analysis. Resources which could potentially be impacted to a level requiring further analysis are described in chapter 3, and impacts on these resources are analyzed in chapter 4.

### 3.1.1 General Description

The project area is located about 10 miles west of Huntington in Emery County (see Map 1 in Appendix A).

The project area is within the High Plateaus of Utah physiographic subdivision of the Colorado Plateau. More specifically, the project area is located in Rilda and Huntington Canyons, on the east side of the Wasatch Plateau. Elevation of the proposed project is between 6,500 and 7,800 feet above sea level. A majority of the project area has been previously impacted by the existing roadways and utilities within these canyons.

### 3.1.2 Resources Brought Forward for Analysis

The scoping process indicated that the following resources could potentially be impacted by this proposed project, and require further analysis:

#### *3.1.2.1 Cultural Resources/Native American Religious Concerns/Values*

The area of potential effect (APE) is defined to be the footprint of the pipeline with a 300-foot-diameter buffer around the pipeline centerline. A total of ten sites are known to be located within the APE. Of these sites, two were determined eligible for the National Historic Register in 1985; however, both were excavated in 1986 and reburied outside the road right-of-way, on Emery County property. Two new sites were recorded in 2016; these are recommended as ineligible to the National Historic Register. The remaining six sites were previously determined to be ineligible for listing to the National Historic Register.

There is potential for discovery of or adverse impacts to cultural resources as a result of project implementation due to new excavation, although this potential is low due to the project overlap with existing disturbed rights-of-way. Approximately 2.7 acres of proposed right-of-way would occur beyond the Emery County Road #306 right-of-way; this is about 12 percent of the total 21.8-acre project area. In the event that a discovery occurred during construction, the discovery plan in the POD (Appendix D) would be applied.

#### *3.1.2.2 Designated Areas: National Trails and Backways*

The proposed project parallels a segment of the Huntington/Eccles Canyons Energy Loop National Scenic Byway. The Byway is approximately 101 miles long and travels from Fairview through the Manti-La Sal National Forest southeast to Huntington via Huntington Canyon, and northeast to near Colton via Eccles Canyon. Sights along the Byway highlight industrial development such as coal

mining operations, historic mining towns, and coal-fired power plants. Of the 101 total miles of the Byway, the project parallels about 2.8 miles between 8 and 11 miles west of Huntington. The relevant goals as stated in the Energy Loop Byway Corridor Management Plan Update (2011) are to "Advocate strategies and activities that protect the intrinsic character and natural resources along the Byway," and, "Provide safe travel along the Byway for the visiting public and residents." Designated roadside interpretive sites do not occur within the project area.

#### *3.1.2.3 Recreation Resources*

The proposed action is located within an Extensive Recreation Management Area (ERMA), where significant recreation opportunities and problems are limited and explicit recreation management is not required. Most recreation in the area is associated with the Byway and sites further up the canyon that are accessed by the highway. Bear Creek Campground is adjacent to the highway, near the Huntington Power Plant.

#### *3.1.2.4 Soils Resources*

The soils within the project area have been generally described as alluvial bottomland. These soils are "very deep (greater than 60 inches to bedrock)," and "well to somewhat poorly drained." Soil textures are primarily sandy loam or sandy clay loam. Stones and boulders are scattered on the soil surface. A majority of soils in the project area are within previously disturbed road rights-of-way (19.1 acres). The remaining 2.7 acres (12 percent) of proposed right-of-way would occur outside of the existing road rights-of-way. Vegetation is sparse along SR-31, and mainly consists of roadside weeds and grasses with limited sagebrush (*Artemisia* spp.) and juniper (*Juniperus* spp.). Vegetation beyond the road right-of-way for Emery County Road #306 includes up to 2.7 acres of mature conifers, shrubs, and grasses.

#### *3.1.2.5 Visual Resources*

The project area is located within a VRM Class II area on BLM-administered land, where the objective is to retain the existing character of the landscape. Management activities may be seen but should not attract the attention of the casual observer. Project activities would be visible to those travelling on the parallel segment of SR-31. On FS-administered lands adjacent to SR-31, the Visual Quality Objective (VQO) is Partial Retention of the characteristic landscape. The VQO in Rilda Canyon is Modification.

#### *3.1.2.6 Water Resources*

The proposed project is within the Huntington Creek watershed. Huntington Creek is a perennial stream that drains a large area of the Wasatch Plateau. It is one of three headwater tributaries to the San Rafael River. Generally, headwater streams contribute substantial recharge to aquifer and groundwater systems, especially where confined canyons enter broad valleys or contact water-bearing geologic strata or quaternary valley fill aquifers. A report by the Utah Geological Survey (2003) specifically discusses Huntington Creek and other headwater tributaries of the San Rafael River as major groundwater recharge contributors.

The proposed pipeline alignment parallels Huntington Creek and the bottom of Rilda Canyon, which drains into Huntington Creek. A majority of the project area is within the Miller Fork Canyon-Huntington Creek 6th field Hydrologic Unit Code (HUC; 140600090105). The last mile of the project is within the Huntington Lake-Huntington Creek 6th field HUC (140600090107). The surface waters within the FS boundary are designated as Category 1 per UAC R317-2. A permit cannot be obtained to discharge intercepted groundwater at Rilda Canyon portals because the water would discharge into Category 1 waters, where new point source discharges of wastewater are prohibited.

The project area is located at the upper boundary of Utah Department of Environmental Quality - Division of Water Quality Watershed Assessment Unit Huntington Creek-2 (UT14060009-004), and the lower boundary of Huntington Creek-3 (UT14060009-003). Huntington Creek-2, which includes Huntington Creek and its tributaries from Highway 10 to the FS boundary, and Huntington Creek-3, which includes Huntington Creek and its tributaries from the FS boundary to the headwaters, are currently impaired for dissolved oxygen, total dissolved solids (TDS), pH, and temperature (Division of Water Quality 2016); these conditions are likely due to the Seeley wildfire that occurred in 2012 (Peterson 2016). Stormwater flows from the project area would discharge into Huntington Creek-2 and -3.

PacifiCorp has collected and had a laboratory analyze the intercepted groundwater samples from areas within the mine that will gravity flow to the Rilda Canyon portals utilizing the EPA Priority Pollutant List, which consists of 129 priority pollutants (USDA FS 2016b). None of the pollutant parameters were detected. The intercepted groundwater in the mine is estimated to initially have a total iron concentration is 2-2.5 mg/L and an estimated TDS concentration of 500 mg/L. The elevated levels of iron in the groundwater is from the oxidation of the mineral pyrite in areas of the mine that contain pyrite mineralization within the coal seam. A gradual decrease in the concentration of iron is predicted to occur over the next 5 to 10 years as the surface area of exposed pyrite is consumed and available oxygen diminishes. The concentration of iron is the only elevated analyte in the mine's groundwater that exceeds water quality standards for PacifiCorp's Deer Creek Canyon discharge permit (UT0023604). The intercepted groundwater has an initial estimated flow rate of about 500-600 gpm (USDA FS 2016b). The amount of flow is expected to decrease with time because there is no active recharge from perched aquifers (USDA FS 2016b).

Per UAC R317-2-13, Beneficial Use Classifications identified for waters within Huntington Creek-2 and -3 include:

- 1C - Drinking Water
- 2B - Secondary Contact Recreation
- 3A - Cold Water Aquatic Life
- 4 - Agricultural Uses

Huntington Creek water is diverted below the project area for use by the Huntington Power Plant, agricultural irrigation, secondary municipal irrigation systems, and culinary use by communities in the valley below.

Surface flows from the project area would drain east through Rilda Canyon into Huntington Creek. A culinary water gathering system operated by the North Emery Water Users Special Service District sits approximately 1,500 feet east of and below the Rilda Canyon portals; this system utilizes the Rilda Canyon Upper and Lower developed springs, and is downgradient from the proposed project. The district provides culinary water to Lawrence, Huntington Canyon, Huntington Airport, and areas outside city limits in Northern Emery County. A source protection plan is on file with the Utah Division of Drinking Water. The Huntington Cleveland Irrigation Company holds water rights for Birch Spring, which is located just north of Highway 31.

#### *3.1.2.7 Wildlife Resources*

Various wildlife species of concern could occur within the project area or be impacted by the project. These species include FS sensitive species, FS management indicator species (MIS), migratory birds (including raptors), and big game. A biological specialist report (USDA FS 2016a) and Biological Assessment/Biological Evaluation (BA/BE; Appendix E) were prepared to analyze and disclose

impacts to the relevant species of concern for the FS. Please see those reports for more detail on the affected environmental and effects analysis.

The following species were carried forward for detailed analysis:

***Bald eagle (Haliaeetus leucocephalus) – FS sensitive, migratory bird***

No bald eagles are known to nest on the Ferron-Price Ranger District. Open habitats with available carrion could exist within the project area. Bald eagles may fly over the area and roost or perch incidentally, mainly from November through March.

***Flammulated owl (Otus flammeolus) – FS sensitive, migratory bird***

Flammulated owls may nest in the mature forest at the bottom of Rilda Canyon, and could forage within the project area.

***Northern goshawk (Accipiter gentilis) – FS sensitive, migratory bird***

Goshawks may nest in the mature forest at the bottom of Rilda Canyon, and could forage within the project area.

***Peregrine falcon (Falco peregrinus anatum) – FS sensitive, migratory bird***

Potentially suitable cliff nesting habitat occurs in both Rilda and Huntington Canyons. The project area includes riparian habitat, which may provide prey for foraging falcons.

***Spotted bat (Euderma maculatum) – FS sensitive***

Potential cliff roosting habitat occurs in both Rilda and Huntington Canyons. Foraging may occur throughout the riparian area adjacent to the project area.

***Townsend's big-eared bat (Corynorhinus townsendii pallescens) – FS sensitive***

Potential cavern roosting habitat is not known within the project area. Foraging may occur throughout the riparian area adjacent to the project area.

***Mule deer (Odocoileus hemionus) – FS MIS***

The proposed project is wholly within Utah Division of Wildlife Resources (UDWR)-mapped crucial winter habitat. Trend counts conducted by the UDWR indicate that the mule deer population trend in Utah has been increasing (UDWR 2014).

***Rocky Mountain elk (Cervus elaphus) – FS MIS***

The proposed project is within UDWR-mapped crucial winter and summer habitats. Trend counts by the UDWR indicate that elk populations in the area are at or above the population objective (UDWR 2015).

***Golden eagle (Aquila chrysaetos) – FS MIS, migratory bird***

Potentially suitable cliff nesting habitat occurs in both Rilda and Huntington Canyons. Golden eagles may forage throughout the project area. Results from annual surveys on the Forest indicate that golden eagle populations across the Manti-La Sal National Forest are stable and will continue to persist across the Forest (USDA FS 2016a).

# Chapter 4. Environmental Impacts

## 4.1 Introduction

The potential consequences or effects of each alternative are discussed in this chapter. Best management practices (BMPs) and design features are incorporated within the applicant's proposed action, which would reduce or eliminate a majority of the potential environmental impacts.

Direct effects are those caused by an action that occur at the same time and place. Indirect effects are those that are reasonably foreseeable consequences of the action, but are later in time or further removed in distance from the direct effects. Both types of effects are discussed in this section.

Impacts to a resource can beneficial or adverse over the short- or long-term.

Environmental impacts that could result from implementation of the proposed action or no action alternative are quantified where possible. In absence of quantifiable data, the professional judgment of knowledgeable sources was used. Impacts may be described using ranges of potential impacts or in qualitative terms, if appropriate.

## 4.2 Direct and Indirect Impacts

### 4.2.1 Proposed Action

This section analyzes the impacts of the proposed action to those potentially impacted resources described in chapter 3 above.

The proposed action would result in the disturbance of up to 7.0 acres of FS-administered land, 4.7 acres of BLM-administered land, and 10.1 acres of private land (21.8 acres total; see Table 2-2), all parallel to existing roadways and largely within existing road rights-of-way. The disturbance would include clearing a portion of the temporary right-of-way for work access and excavation of a trench to install the pipeline. The trench would be from 3 to 7 feet wide and over 6 feet deep. Temporary erosion control measures could include sediment barriers such as silt fence or fiber rolls. Permanent erosion control measures would include trench breakers and revegetation where suitable within the road rights-of-way.

Directional drilling would be applied at road crossings and Bear Creek to avoid impacts to the roadway surface and the stream channel. The pipeline would be attached to existing structures at the Huntington Creek crossings; the proposed design avoids impacts within active stream channels. No new roads are proposed as the project would be accessed by the existing adjacent roadways. Manual on Uniform Traffic Control Devices (MUTCD)-approved warning signs would be placed along SR-31, and traffic control would be applied when necessary. Project activities are anticipated to occur for up to 3 months in the fall and winter of 2016-2017.

#### *4.2.1.1 Cultural Resources/Native American Religious Concerns/Values*

Ground-disturbing activities such as excavation can directly and irreversibly damage or destroy sensitive cultural resources. A Class III inventory of the project area was completed in June of 2016. No eligible cultural sites were identified within the APE according to the inventory report prepared by EnviroWest (Billat 2016); however, due to the potential for subsurface discoveries during excavation, a cultural monitor would be on-site during excavation activities at identified locations. A cultural resources discovery plan has been developed in case of unanticipated buried resources, and is included in the POD (Appendix D). These measures would minimize the risk of adverse impacts to cultural resources.

Implementation of the project could also result in atmospheric, visual, and auditory disturbances that impact the cultural experience of the area. Effects to the canyon would be temporary (up to 3 months during construction), and would not significantly exceed the existing levels of disturbance in the canyon.

#### *4.2.1.2 Designated Areas: National Trails and Backways*

The project would impact 2.8 miles of the total 101-mile Huntington/Eccles Canyons Energy Loop National Scenic Byway (about 3 percent). Implementation of the project would meet the stated goal of the Byway to "advocate strategies and activities that protect the intrinsic character and natural resources along the Byway." Impacts to the intrinsic character of the Byway are disclosed in the *Visual Resources* section of this chapter. Impacts to natural resources are disclosed throughout this chapter (*Cultural Resources*, *Soil Resources*, *Water Resources*, and *Wildlife Resources*). The project includes traffic control to reduce safety risks to the travelling public; therefore the project would also meet the stated goal to "provide safe travel along the Byway for the visiting public and residents."

#### *4.2.1.3 Recreation Resources*

Implementation of the project would cause temporary disturbance and possible delays to recreational users on the Huntington/Eccles Canyons Energy Loop National Scenic Byway and adjacent recreation areas; however, it is anticipated that traffic flow would be maintained during construction, and delays would be limited. Bear Creek Campground is directly across the highway from the proposed project; noise associated with project activities could disturb campers during construction. Any impacts would be temporary, as project activities are only expected to occur for up to 3 months in the fall and winter. Recreation would not be adversely impacted in the long-term by implementation of the proposed action.

#### *4.2.1.4 Soil Resources*

The proposed project would include excavation of less than 5.6 miles of linear trench, with associated ground disturbance of up to 21.8 acres. Approximately 19.1 of these acres (88 percent) are within existing disturbed rights-of-way. Direct impacts to soil would include exposure due to vegetation removal on 2.7 undisturbed acres, mixing of soil horizons, loss of topsoil productivity, soil compaction, and increased susceptibility to erosion. The magnitude of impacts would be reduced when considering the existing impacts from the road rights-of-way. Where compatible with the overlapping road rights-of-way, disturbed areas would be reclaimed according to the reclamation plan in the POD (Appendix D). Impacts to soil resources on the reclaimed areas would be short-term (during construction and up to 5 years after), and would diminish as reclamation was achieved.

Implementation of the reclamation plan would reduce soil erosion, control runoff, and prevent pollution. A stormwater pollution prevention plan (SWPPP) would be prepared prior to construction, and would describe measures to minimize erosion and prevent soils from leaving the site during construction activities. The measures outlined in these plans would stabilize disturbed areas during and after construction.

#### *4.2.1.5 Visual Resources*

Implementation of the proposed project would create a visual contrast that would attract attention along SR-31; however, the bold vertical lines of the canyon walls would still dominate the view. As reseeded and replanted vegetation established and matured, visual contrast of the disturbed right-of-way would decrease. The level of change to the landscape would be low; the proposed changes would repeat the basic elements found in the predominant natural and manmade features. Detailed analysis of the visual impacts is included in Appendix F. The project would meet BLM Class II objectives to retain the existing character of the landscape. The VQO of Partial Retention would not be met temporarily along SR-31 on FS-administered lands during construction activities; however,

upon successful reclamation, the VQO would be met. The VQO of Modification in Rilda Canyon would be met through implementation of the proposed action.

#### *4.2.1.6 Water Resources*

Implementation of the proposed action would impact surface water flows, and would potentially increase sedimentation or pollution of surface waters. Approximately 21.8 acres would be disturbed by implementation of the proposed action; 19.1 of these acres (88 percent) are within existing disturbed rights-of-way. This disturbance could lead to increased erosion and sedimentation of the disturbed soils into Huntington Creek.

To reduce or prevent adverse impacts to water quality, a stormwater pollution prevention plan (SWPPP) and spill prevention and response plan (SPRP) would be prepared prior to initiation of ground disturbance. These plans would detail the best management practices and site-specific measures to prevent sediment and other pollutants from discharging into the creek during construction. Implementation of the SWPPP and SPRP would reduce sedimentation and the risk of pollution to surface waters during construction. For a list of the BMPs that would be implemented, refer to the POD (Appendix D) and the Hydrology Report (USDA FS 2016b).

The pipeline would be buried above the water level of the adjacent groundwater system that feeds the North Emery Water Users Special Service District's spring collection system; therefore, implementation of the project would not impact the quality or quantity of water present in the groundwater system that sustains the springs. It is also unlikely that implementation of the project would affect Birch Spring's water quality or quantity because the spring is topographically above the proposed disturbance (Peterson 2016).

If implemented, the intercepted groundwater piped from the Rilda Canyon portals would mix with diverted water from Huntington Creek in the settling pond, and then be used in the plant operations. The water management and discharge would be regulated by PacifiCorp's existing UPDES permits.

Implementation of the proposed action would not adversely affect water quality in the long-term, nor contribute to the existing water quality impairments defined by the Utah Department of Environmental Quality (UDEQ; USDA FS 2016b).

#### *4.2.1.7 Wildlife Resources*

The information in this section is summarized from the Biological Specialist Report (USDA FS 2016a). Please see that report for more detail on the effects analysis.

Up to 21.8 acres of potentially suitable habitat for wildlife species could be disturbed by implementation of the proposed project; however, actual impacts would likely be much less because a majority (19.1 acres; 88 percent) of the proposed right-of-way overlaps with existing roadway disturbance, which is mostly early seral species adjacent to a busy road, and does not provide habitat value. Habitat effectiveness in the area is likely decreased due to the existing roads and associated disturbance. Disturbance to wildlife due to noise or the presence of equipment and personnel could occur, but is unlikely as most animals would be habituated to some level of disturbance from the existing road. Potential disturbance from construction would be short-term (up to 3 months), and most animals would avoid areas where project activities were occurring. Temporary displacement would be short-term and during construction (up to 3 months). Disturbance to nesting migratory birds is unlikely as all young should be fledged and highly mobile by the time project activities begin in the fall.

Implementation of the proposed action may impact individuals or habitat of the FS-sensitive species analyzed in this document, but would not likely contribute to a trend toward federal listing or cause a loss of persistence to these populations or species.

Habitat effectiveness would be decreased for all species analyzed, but only slightly when considering the existing disturbance and habitat modification.

Mule deer and Rocky Mountain elk

The UDWR has delineated crucial winter mule deer habitat and crucial winter and summer elk habitat within the project area. Up to 2.7 acres of vegetation may be removed directly adjacent to the roadway; however, the linear nature of the project would result in similar edge habitat, which would continue to provide foraging opportunities for big game and result in minimal loss of cover. Project activities would occur in the fall and winter of 2016, after calving season; therefore, crucial elk summer habitat use would not be impacted. Project activities may extend into December, when crucial winter habitats are used by both deer and elk. Deer and elk may be temporarily displaced by disturbance associated with the proposed action, but would be expected to return to the area shortly after implementation. Habitat effectiveness would be decreased, but only slightly when considering the existing disturbance and habitat modification. The proposed project would not impact mule deer or elk population trends across the Forest.

### 4.2.2 No Action

The no action alternative would be to deny the application as proposed. The mine would remain open to allow for continued pumping of intercepted groundwater. The mine would not proceed with final closure and reclamation activities until proper water management methods were determined. Because no new ground disturbance would be authorized, no effects would be expected to the Cultural Resources/Native American Religious Concerns/Values, Designated Areas: National Trails and Backways, Recreation Resources, Soil Resources, Visual Resources, Water Resources, or Wildlife Resources.

## 4.3 Cumulative Impacts

### 4.3.1 Introduction

Based on the anticipated permanent assignment of a Title V right-of-way grant for the proposed pipeline, the timeframe for the cumulative effects is permanent.

The purpose of the cumulative effects section is to describe the interaction among the effects of the proposed action and relevant past, present, and reasonably foreseeable actions. This interaction may be:

- Additive: the effects of the actions add together to make up the cumulative effect.
- Countervailing: the effects of some actions balance or mitigate the effects of other actions.
- Synergistic: the effects of the actions together is greater than the sum of their individual effects.

### 4.3.2 Past, Present, and Reasonably Foreseeable Actions

The proposed project is within active grazing allotments. Previous actions include construction of paved roadways, culinary water lines, oil and gas development, telecommunication lines, and power lines that run parallel within the canyons. Emery Telcom will be installing a fiber optic cable along a portion of SR-31 on BLM-administered land and private land in the fall of 2016. This project was approved under DOI-BLM-UT-G020-2016-0015-CX.

Operation of the Huntington Power Plant, the Rhino Mine, and the Deer Creek Mine have also impacted the area. There will be reclamation activities associated with the final closure of the Rilda Portals if the proposed project is completed.

## 4.3.3 Cumulative Impacts

### *4.3.3.1 Cultural Resources/Native American Religious Concerns/Values*

Impacts to cultural resources from construction activities are not necessarily additive across a landscape because the sites are typically discrete; therefore, the cumulative impact area for cultural resources is the 205-acre APE. Previous development of the existing roadways and utilities has resulted in considerable surface disturbance within the cumulative impact area. Impacts to cultural resources have been minimized by avoiding or mitigating adverse impacts based on field surveys prior to surface-disturbing actions. Future impacts to buried cultural resources in the cumulative impact area are possible, but unlikely due to the minimal amount of available space for additional utilities.

***Proposed Action***

Impacts to the cultural experience would be temporarily additive (up to 3 months during construction) when considering the existing disturbance in the canyon. It is not expected that these impacts would result in cumulative changes to the relevant and important values within the canyon.

***No Action***

There would be no cumulative effects to cultural resources or values under the no action alternative because there would be no direct or indirect impacts to cultural resources or values.

### *4.3.3.2 Designated Areas: National Trails and Backways*

The cumulative impact area is the Huntington/Eccles Canyons Scenic Byway.

***Proposed Action***

Based on the analysis of relevant resource values disclosed in this EA, direct or indirect impacts to the values of the area would be temporary, and not cumulative.

***No Action***

There would be no cumulative effects to the Byway under the no action alternative, because there would be no direct or indirect impacts.

### *4.3.3.3 Recreation Resources*

The cumulative impact area for recreation resources is the Huntington/Eccles Canyons Scenic Byway and adjacent Bear Creek Campground.

***Proposed Action***

Based on the impact analysis for *Designated Areas: National Trails and Backways*, direct or indirect impacts to the recreation values of the area would be temporary, and not cumulative.

***No Action***

There would be no cumulative effects to recreation the no action alternative, because there would be no direct or indirect impacts to recreation.

#### *4.3.3.4 Soil Resources*

The cumulative impact area for soil resources is the 77,185-acre 6th field watersheds (Miller Fork Canyon-Huntington Creek [140600090105] and Huntington Lake-Huntington Creek [140600090107]) that contain the project area (see Map 4 in Appendix A).

***Proposed Action***

Cumulative effects are unlikely to spread beyond the topographical boundaries of the watersheds. The majority of impacts to soils in the area are due to surface disturbing activities associated with agriculture and energy development. Disturbance from implementation of the proposed action could add cumulatively to soil impacts, such as erosion, within the larger area; however, implementation of the design features would decrease the magnitude of potential effects during construction. Impacts to the soil resources would be temporarily additive (during construction and up to 5 years after), but would reduce as reclamation was completed. It is not expected that these impacts would result in cumulative long-term impacts to soil resources within the watershed.

***No Action***

There would be no cumulative effects to soils under the no action alternative, because there would be no direct or indirect impacts to soils.

#### *4.3.3.5 Visual Resources*

The cumulative impact area includes Huntington Canyon from the power plant to the junction with Emery County Road #306, and Rilda Canyon up to the mine. Visual impacts within these areas of the canyons include the Huntington Power Plant, roadways, utilities, and mining developments.

***Proposed Action***

Visual impacts along the existing features would be additive for those travelling the highway and county road. However, cumulative impacts would be temporary, and would reduce as the proposed reclamation efforts were applied.

***No Action***

There would be no cumulative effects to visuals under the no action alternative, because there would be no direct or indirect impacts to visuals.

#### *4.3.3.6 Water Resources*

The cumulative impact area for water resources is the 77,185-acre 6th field watersheds (Miller Fork Canyon-Huntington Creek [140600090105] and Huntington Lake-Huntington Creek [140600090107]) that contain the project area. Cumulative effects are unlikely to spread beyond the topographical boundaries of the watersheds. The majority of impacts to water resources in the area are due to surface disturbance, sedimentation, and potential spills.

***Proposed Action***

Disturbance from implementation of the proposed project could add cumulatively to impacts within the watersheds; however, implementation of the design features would decrease the magnitude of potential effects during construction. Under the proposed action, less than three-hundredths of a percent (0.028 %) of the cumulative impact area would be temporarily disturbed. Implementation of the reclamation plan would reduce erosion, control runoff, and prevent pollution. Cumulative impacts would be temporary, and would reduce as the proposed reclamation efforts were applied.

***No Action***

There would be no cumulative effects to water resources under the no action alternative, because there would be no direct or indirect impacts to water resources.

#### *4.3.3.7 Wildlife Resources*

The cumulative impact analyses for FS sensitive species were disclosed in the BE (Appendix E). That report determined that, "Due to the magnitude of existing disturbance, implementation of the proposed action would not result in cumulative adverse impacts to sensitive species." There would be no cumulative effects to sensitive species under the no action alternative, because there would be no direct or indirect impacts to sensitive species.

The cumulative impact analyses for management indicator species, migratory birds, and big game were disclosed in the biological specialist report prepared for this project (USDA FS 2016a). The report determined that habitat effectiveness would not noticeably decrease for any analyzed species when considering the existing disturbance within the cumulative impact area, and that the proposed project would not impact population trends across the Forest for any of the analyzed management indicator species (MIS; golden eagle, northern goshawk, mule deer, or elk). There would be no cumulative effects to management indicator species, migratory birds, and big game under the no action alternative, because there would be no direct or indirect impacts. Cumulative effects for the big game species are repeated here.

<u>Mule deer and Rocky Mountain elk</u>

The cumulative impact area for mule deer includes all mapped crucial winter habitat within the impacted watersheds; the cumulative impact area encompasses an area of 48,806 acres (see Map 5 in Appendix A). The cumulative impact area for elk includes all mapped crucial winter and summer habitat within the impacted watersheds; the cumulative impact area encompasses an area of 62,003 acres (see Map 6 in Appendix A).

***Proposed Action***

Big game habitat within the cumulative impact area has been impacted by oil and gas development, competitive livestock grazing, and recreational use. Possible effects of these actions include displacement into less suitable habitats, behavioral disruption and stress due to construction noise and activity, and modification of forage and water resources. Disturbance to big game could occur as a result of project activities, but is unlikely as the animals may avoid areas where project disturbance is occurring, and abundant isolated habitat is accessible within the cumulative impact area. Habitat effectiveness would not noticeably decrease when considering the existing disturbance within the cumulative impact area. Mule deer and Rocky Mountain elk would not be adversely affected by implementation of the proposed action.

***No Action***

There would be no cumulative effects to big game under the no action alternative, because there would be no direct or indirect impacts to big game.

# Chapter 5. Persons, Groups, and Agencies Consulted

## 5.1 Persons, Agencies, and Organizations Consulted

Consultation efforts are summarized in the table below:

| Name | Purpose or Authorities for Consultation or Coordination | Findings and Conclusions |
|---|---|---|
| Tribal consultation | As required by the American Indian Religious Freedom Act of 1978 (42 U.S.C. 1531) | All tribes affiliated with lands in the proposed project area were consulted with by the BLM in a letter sent on June 17, 2016. |
| Utah State Historic Preservation Office (SHPO) | Consultation for undertakings, as required by the National Historic Preservation Act (NHPA) (16 USC 470)<br>36 CFR 800.4(d)(1)<br>Or<br>Consulted on as required by the National Historic Preservation Act of 1966 (as amended) (16 U.S.C. 470) | To be completed. |

A 30-day comment period was initiated on June 14, 2016, with a mailing to government entities, elected officials, and known interested parties. Over 855 comments were received; however, most of these were considered outside the scope of the proposed project. Responses to the scoping comments received are included in Appendix C.

Notice to potentially affected rights-of-way holders and the grazing permittee were sent on June 25, 2016. They were given 30 days to send their concerns or written recommendations as to how the proposed use affects the integrity of, or their ability to operate, their facilities. No responses were received.

## 5.2 List of Preparers

| Responsibility | Name | Affiliation |
|---|---|---|
| Team Lead | Connie Leschin | BLM |
| Team Lead | Jeff Salow | FS |
| Environmental Coordinator | Jake Palma | BLM |
| NEPA Planner | Dana Truman | FS |
| Document preparation | Jenna Jorgensen | Jones and DeMille Engineering |

Additional BLM and FS staff members who determined the affected resources for this document are listed in Appendix B.

# Chapter 6. References


Billat, S. 2016. A Cultural Resource Inventory of the Proposed Rilda Canyon to Huntington Power Plant Project, Emery County, Utah. EnviroWest Cultural Resource Report 16-01. July 25.

Division of Water Quality. 2016. Utah's Draft 2016 Integrated Report. Salt Lake City, Utah. Utah Department of Environmental Quality.

Emery County. 2012. Emery County General Plan, 2012 Revision.

Energy Loop Scenic Byway Steering Committee. 2011. Energy Loop Scenic Byway Corridor Management Plan Update.

Peterson, E. C. 2016. Letter Report of Hydrologic Conditions along PacifiCorp's proposed Deer Creek Pipeline. Peterson Hydrologic. July 11.

Utah Geological Survey. 2003. Energy, Mineral, and Ground-Water Resources of Carbon and Emery Counties, Utah. B-132.

UDWR. 2014. Utah Mule Deer Statewide Management Plan. Utah Division of Wildlife Resources, Department of Natural Resources. December 1, 2014.

UDWR. 2015. Utah Statewide Elk Management Plan. Utah Division of Wildlife Resources, Department of Natural Resources. December 2, 2015.

USDA Forest Service. 1986. Manti-La Sal National Forest Land and Resource Management Plan.

_____. 2016a. Biological Resources Report. Prepared by Jenna Jorgensen. September 16.

_____. 2016b. Hydrology Report. Prepared by Jeff Salow. September 16.

USDOI Bureau of Land Management. 2008. Price Field Office Resource Management Plan.

# Chapter 7. Acronyms and Abbreviations

| Acronyms/Abbreviations | Meaning |
|---|---|
| APE | Area of Potential Effect |
| BA | Biological Assessment |
| BE | Biological Evaluation |
| BLM | Bureau of Land Management |
| BMP | Best Management Practice |
| CEQ | Council on Environmental Quality |
| CFR | Code of Federal Regulations |
| EA | Environmental Assessment |
| FLPMA | Federal Land Policy and Management Act |
| FS | Forest Service |
| HUC | Hydrologic Unit Code |
| IDT | Interdisciplinary Team |
| LRMP | Land and Resource Management Plan |
| MIS | Management Indicator Species |
| MSHA | Mine Safety and Health Administration |
| NEPA | National Environmental Policy Act |
| NHPA | National Historic Preservation Act |
| POD | Plan of Development |
| RMP | Resource Management Plan |
| ROW | Right-of-way |
| SHPO | State Historic Preservation Office |
| SPRP | Spill Prevention and Response Plan |
| SR | State Route |
| SWPPP | Stormwater Pollution Prevention Plan |
| UDEQ | Utah Department of Environmental Quality |
| UDOGM | Utah Division of Oil, Gas and Mining |
| USC | United States Code |
| VQO | Visual Quality Objective |

# Appendix A. Maps

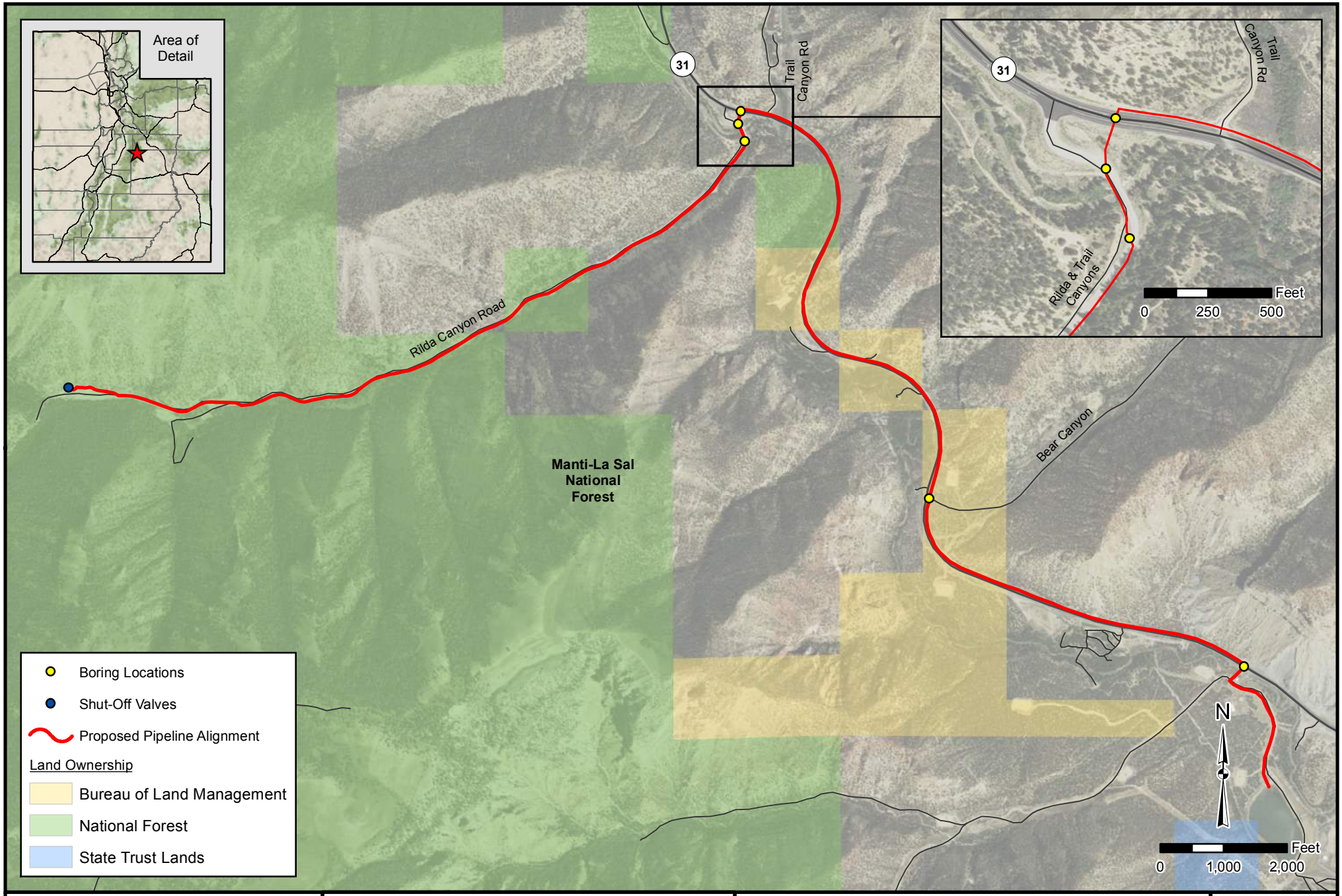


GIS

Jones & DeMille Engineering

*- infrastructure professionals -*

800.748.5275 www.jonesanddemille.com

**PacifiCorp**

***Deer Creek Mine - Proposed Live Water Relief Pipeline Overview***

Map Name: H:\JD\Proj\1506-121\Design\GIS\Maps\EA\1_Overview.mxd

Project Number: 1506-121 | Drawn by: JWW 09-16 | Last Edit: 09/19/2016

**EMERY COUNTY**

SCALE: 1 " = 2,000 '

**1**

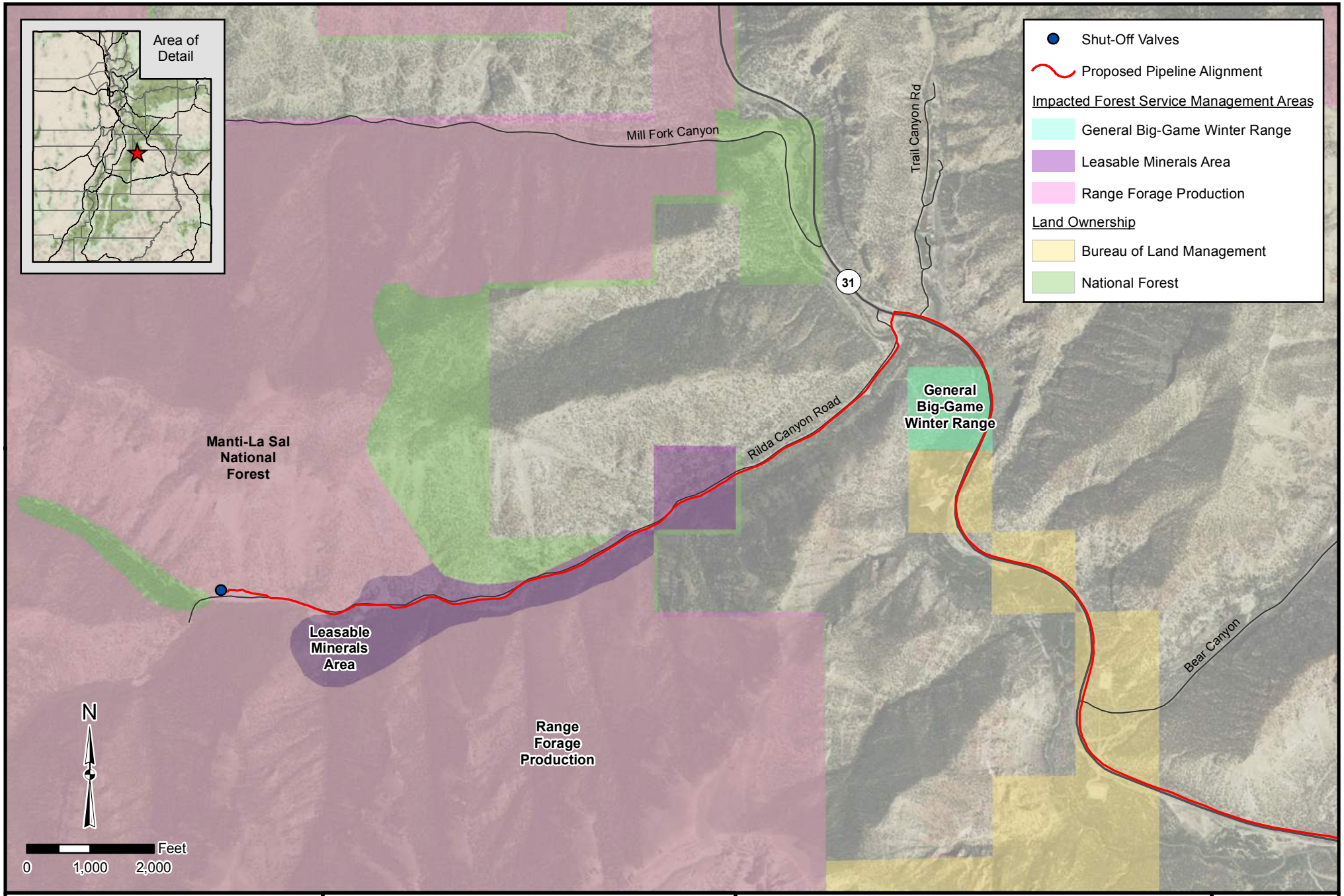


GIS

Jones & DeMille Engineering

*- infrastructure professionals -*

800.748.5275 www.jonesanddemille.com

**PacifiCorp**

***Deer Creek Mine - Proposed Live Water Relief Pipeline***
***Forest Service Management Areas***

Map Name: H:\JD\Proj\1506-121\Design\GIS\Maps\EA\2_Forest_Service_Management_Areas.mxd

Project Number: 1506-121 | Drawn by: JWW 09-16 | Last Edit: 09/19/2016

**EMERY COUNTY**

SCALE: 1 " = 2,000 '

**2**

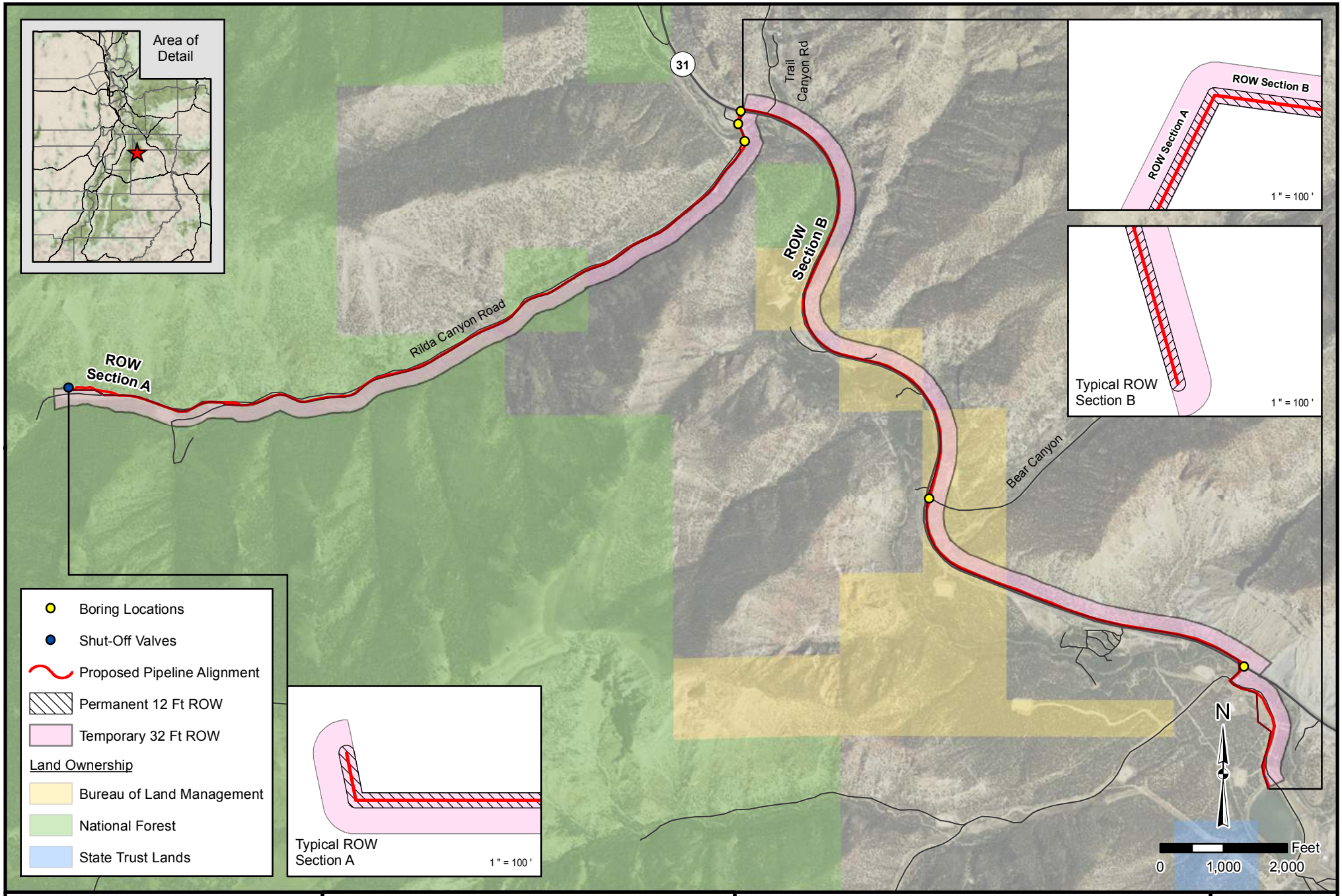


Note: Permanent 12ft ROW and Temporary 32ft ROW have been exaggerated to improve legibility at the 1:1,200 map scale.

GIS

Jones & DeMille Engineering

- infrastructure professionals -

800.748.5275 www.jonesanddemille.com

**PacifiCorp**

***Deer Creek Mine - Proposed Live Water Relief Pipeline***
***Proposed Rights-of-Way***

Map Name: H:\JD\Proj\1506-121\Design\GIS\Maps\EA\3_ROW.mxd

Project Number: 1506-121 | Drawn by: JWW 09-16 | Last Edit: 09/19/2016

**EMERY COUNTY**

SCALE: 1 " = 2,000 '

**3**

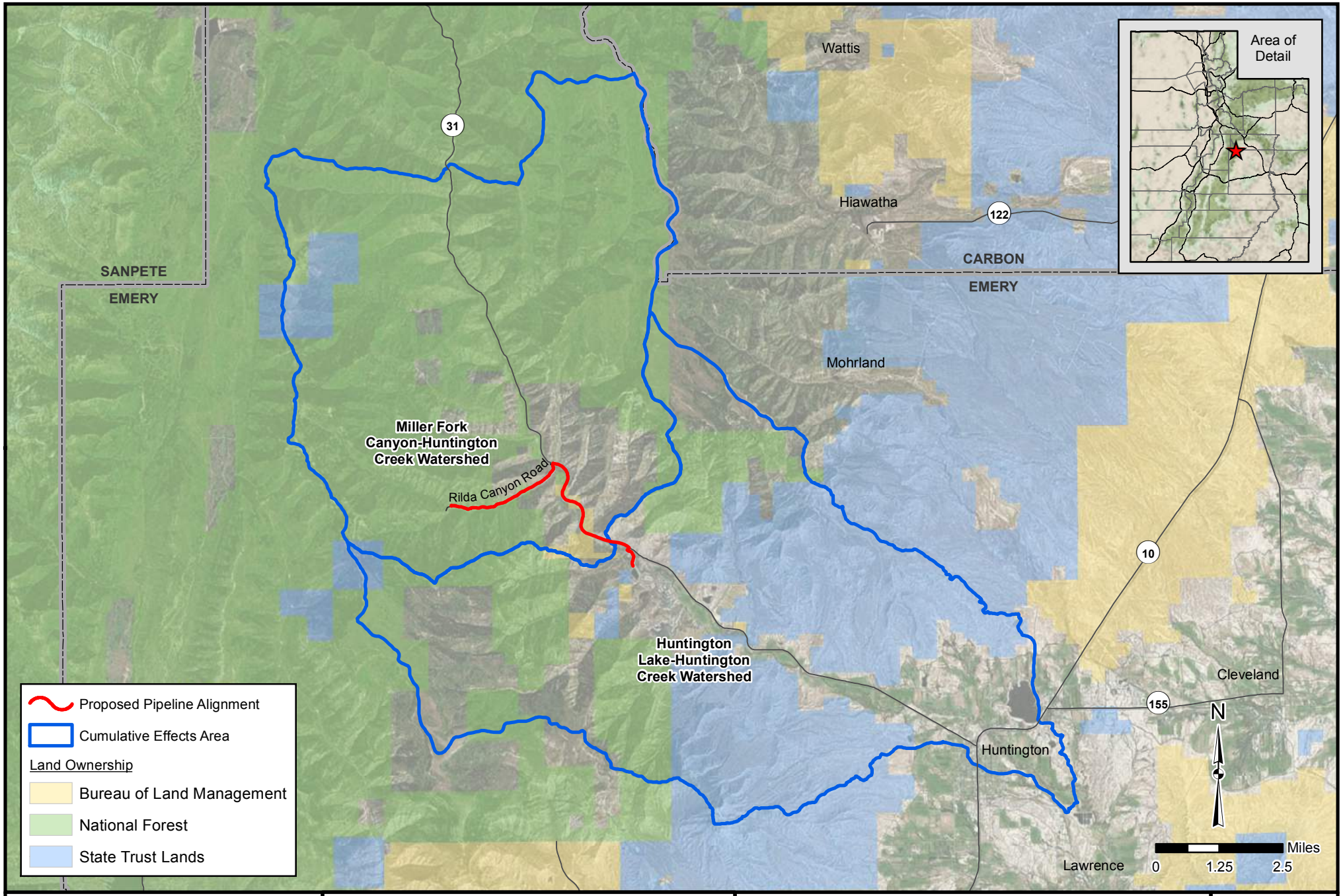


GIS

Jones & DeMille Engineering

- infrastructure professionals -

800.748.5275 www.jonesanddemille.com

**PacifiCorp**

***Deer Creek Mine - Proposed Live Water Relief Pipeline***
***Impacted Watersheds***

Map Name: H:\JD\Proj\1506-121\Design\GIS\Maps\EA\4_Impacted_Watersheds.mxd

Project Number: 1506-121 | Drawn by: JWW 07-16 | Last Edit: 07/20/2016

**EMERY COUNTY**

SCALE: 1 " = 2.5 Miles

**4**

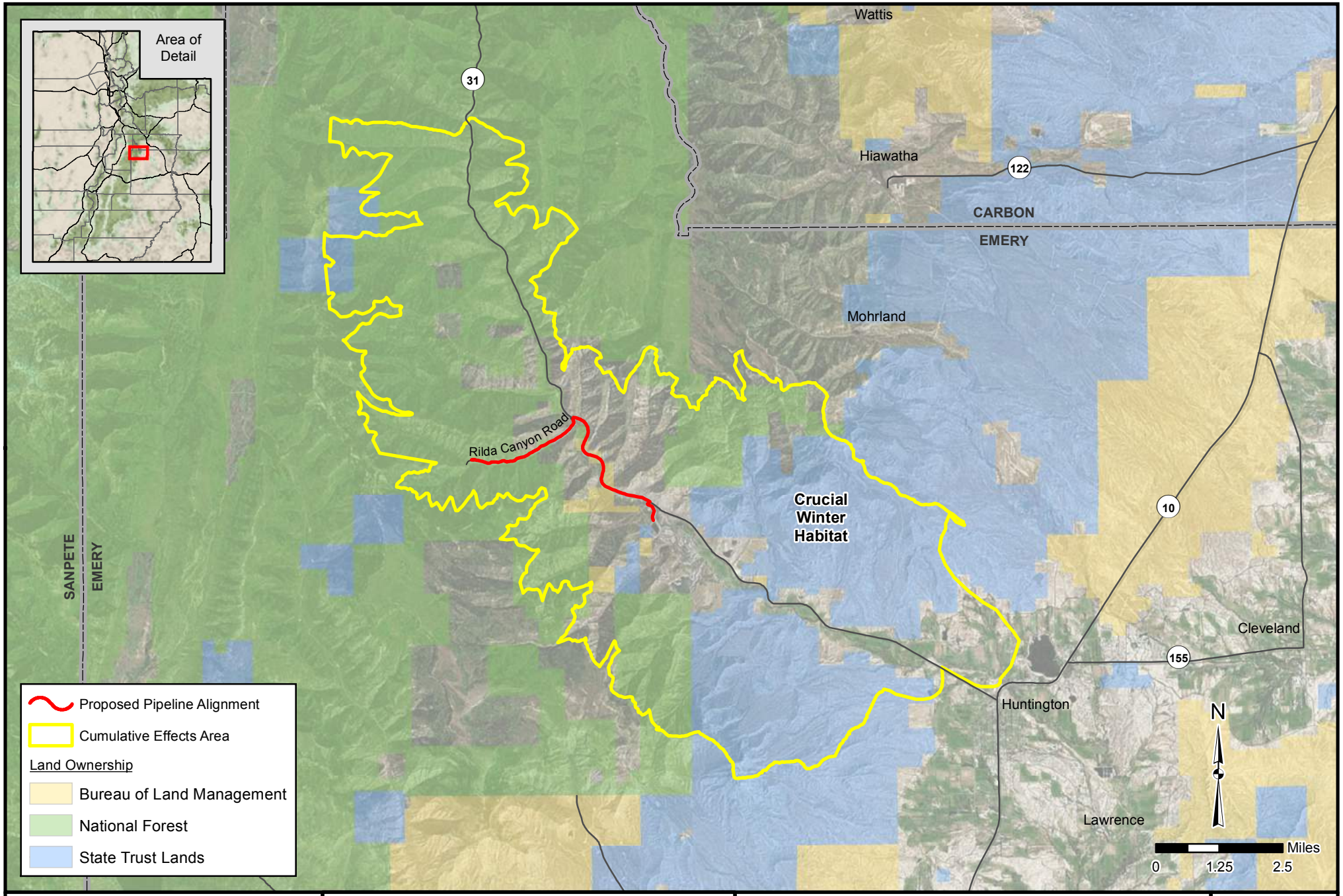


GIS

Jones & DeMille Engineering

- infrastructure professionals -

800.748.5275 www.jonesanddemille.com

**PacifiCorp**

***Deer Creek Mine - Proposed Live Water Relief Pipeline***
***Mule Deer Cumulative Effects Area***

Map Name: H:\JD\Proj\1506-121\Design\GIS\Maps\USFS\5_CEA_Deer.mxd

Project Number: 1506-121 | Drawn by: JWW 08-16 | Last Edit: 08/15/2016

**EMERY COUNTY**

SCALE: 1 " = 2.5 Miles

**5**

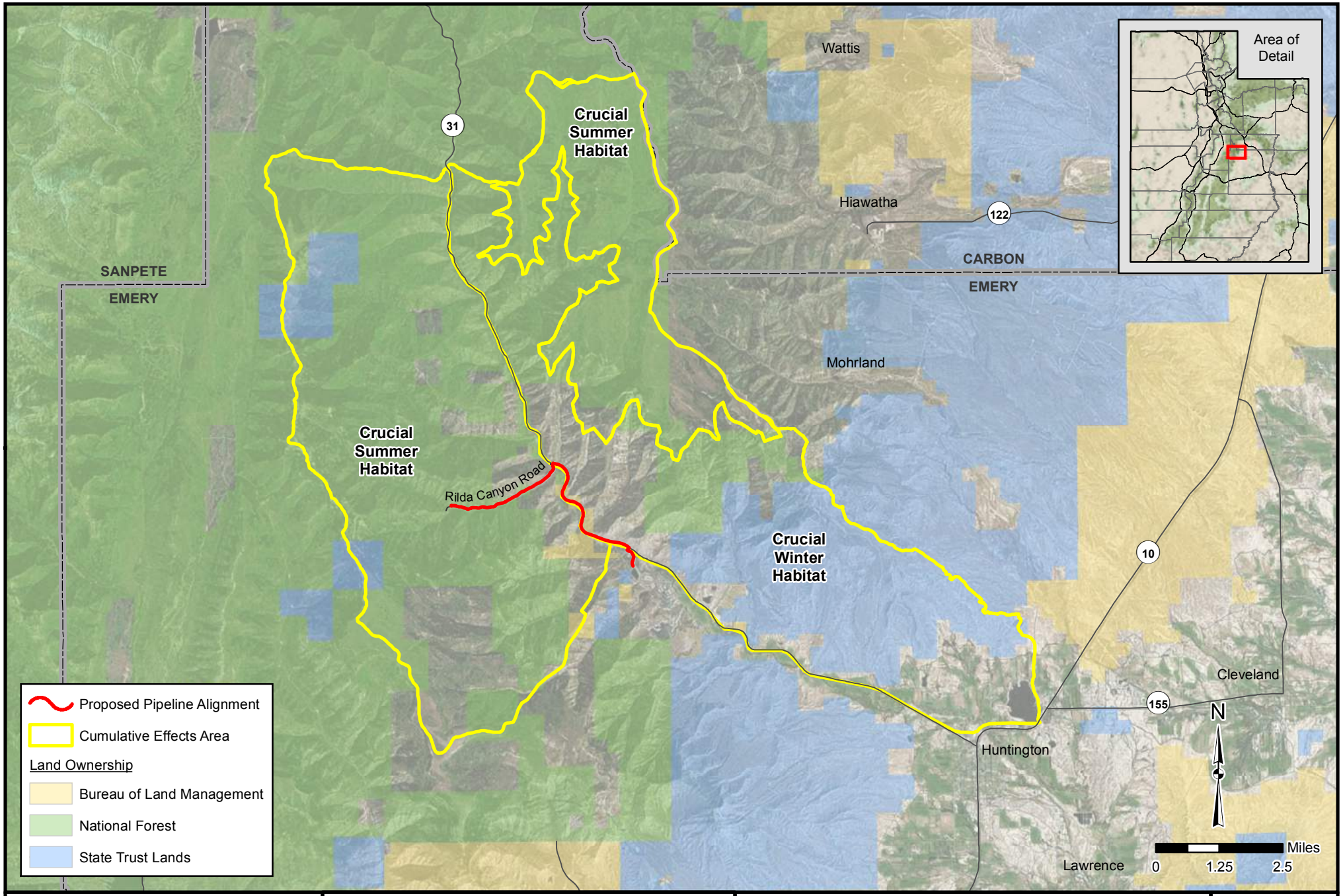


Jones & DeMille Engineering

- infrastructure professionals -

800.748.5275 www.jonesanddemille.com

**PacifiCorp**

***Deer Creek Mine - Proposed Live Water Relief Pipeline***
***Rocky Mountain Elk Cumulative Effects Area***

Map Name: H:\JD\Proj\1506-121\Design\GIS\Maps\USFS\6_CEA_Elk.mxd

Project Number: 1506-121 | Drawn by: JWW 08-16 | Last Edit: 08/15/2016

**EMERY COUNTY**

SCALE: 1 " = 2.5 Miles

**6**

# Appendix B. Interdisciplinary Team Checklists

## BLM IDT Checklist

**Determination of Staff:** ***(Choose one of the following abbreviated options for the left column)***

NP = not present in the area impacted by the proposed or alternative actions

NI = present, but not affected to a degree that detailed analysis is required

PI = present with potential for relevant impact that need to be analyzed in detail in the EA

| Determination | Resource/Issue | Rationale for Determination | Signature | Date |
|---|---|---|---|---|
| **Resources and Issues Considered (Includes Supplemental Authorities Appendix 1 H-1790-1)** | | | | |
| NI | Air Quality & Greenhouse Gas Emissions | Emissions from earth-moving equipment, vehicle traffic, drilling and completion activities, separators, oil storage tanks, dehydration units, and daily tailpipe and fugitive dust emissions could adversely affect air quality.<br>No standards have been set by the EPA or other regulatory agencies for greenhouse gases. In addition, the assessment of greenhouse gas emissions and climate change is still in its earliest stages of formulation. Global scientific models are inconsistent, and regional or local scientific models are lacking so that it is not technically feasible to determine the net impacts to climate due to greenhouse gas emissions. It is anticipated that greenhouse gas emissions associated with this action and its alternative(s) would be negligible. | Jeffrey Brower | 5/13/16 |
| NP | BLM natural areas | There are no BLM Natural Areas within the proposed project area as per GIS and RMP review. | Matt Blocker | 5/12/16 |

| Determination | Resource/Issue | Rationale for Determination | Signature | Date |
|---|---|---|---|---|
| PI | Cultural Resources | The proposed Area of Potential Affect for the Deer Creek Mine pipeline project is defined by any proposed surface disturbing activities with a buffer of 150 feet from the edge of surface disturbance pending topographic features. This project is multijurisdictional. According to the MOU between the BLM and FS, the BLM is responsible for Section 106 for all administered properties, excluding FS-administered land. A total of seven archaeological sites are located within the project and extended buffer area. Of these sites, two are reported as eligible for the National Register (NR) (42EM2095 & 42EM2109); however, both were excavated in the 1980s and are located on Emery County property; their current eligibility status is unknown. Two sites are located on BLM-administered property (42EM3841 & 42EM1101) and are reported as not being eligible for inclusion for the NR. One site is located on private property (42EM1330) and is reported as not being eligible for inclusion on the NR. One site (42EM2667) is located on Emery County property and is reported as not eligible for the NR. One site is located on FS-administered property (42EM3115) and is reported as not being eligible for the NR. Pursuant to 36 CFR 800, additional inventory will be required for any new surface disturbing activities where previous inventory did not occur. | Amber Koski | 5/16/16 |
| PI | Cultural:<br>Native American Religious Concerns | There is a potential to impact cultural resources significant to Tribes. It is recommended that Tribal consultation occur for this project. | Amber Koski | 5/16/16 |
| NP | Designated Areas:<br>Areas of Critical Environmental Concern | After review of our current RMP and GIS, there are no ACECs located within the proposed area. | Josh Winkler | 5/11/16 |
| PI | Designated Areas:<br>National Trails and Backways | The Huntington/Eccles Canyons Energy Loop National Scenic Byway is located within the proposed action. Management directives may be found under the current RMP page #146 (TRA-18 - Manage the small portion of this byway in the PFO in accordance with the USFS Byway Management Plan). The road construction may affect visitor's experience while accessing this Byway. | Josh Winkler | 5/11/16 |
| NP | Designated Areas:<br>Wild and Scenic Rivers | There are no designated Wild and Scenic Rivers within the proposed project area as per GIS and RMP review. | Matt Blocker | 5/12/16 |

| Determination | Resource/Issue | Rationale for Determination | Signature | Date |
|---|---|---|---|---|
| NP | Designated Areas: Wilderness Study Areas | There are no BLM WSAs within the proposed project area as per GIS and RMP review. | Matt Blocker | 5/12/16 |
| NI | Environmental Justice | No minority or economically disadvantaged communities or populations would be disproportionately adversely affected by the proposed action or alternatives. | Jacob Palma | 5/12/16 |
| NI | Farmlands (prime/unique) | No prime or unique farmlands as identified by the NRCS, based on soil survey data for the county, are located in the project area. | Jeffrey Brower | 5/13/16 |
| NI | Fuels/Fire Management | No fuel management activities are planned for the project area. The proposed project would not conflict with fire management activities. | Josh Relph | 5/13/16 |
| NI | Geology / Minerals / Energy Production | This ROW crosses through known fluid and solid (coal) mineral resource areas; however, the designated route for this ROW will have negligible potential impact on any fluid or solid mineral development. The ROW corridor passes through four separate existing federal coal leases and three separate existing federal oil and gas leases. All four of these coal leases have been mined out and are in the process of being relinquished. Therefore, no reduction in mining (or change of any kind) due to the installation of new water pipeline would be required. Also, because of the very narrow corridor proposed for the pipeline, any potential impact to oil and/or gas development within existing leases (or future leases) can be avoided. There is a natural gas pipeline within a portion of the proposed ROW (roughly the lower 1.5 miles); however, there will be no impact to the pipeline due to proximity mitigation. In any case, this buried water line ROW corridor is non-exclusive and does not preclude either solid or fluid mineral development. | Michael Glasson | 5/13/16 |
| NI | Lands/Access | A review of LR2000 and the Master Title Plats showed that the proposed action is compatible with the existing land use and authorized ROWs. There are no conflicts with other land use authorizations. The potentially affected ROW holders were notified and none commented on the proposed project. | Connie Leschin | 5/12/16 |
| NP | Lands with Wilderness Characteristics | There are no lands with wilderness characteristics within the proposed project area as per GIS and RMP review. | Matt Blocker | 5/12/16 |

| Determination | Resource/Issue | Rationale for Determination | Signature | Date |
|---|---|---|---|---|
| NI | Livestock Grazing | The project area goes through the West Huntington Grazing Allotment. The project area is also within a main livestock trailing corridor. By avoiding working on this project during trailing times (June & October), impacts to livestock trailing will be avoided. Since the project is taking place within UDOT's ROW, impacts to livestock grazing in the West Huntington Allotment will be negligible. | Stephanie Bauer | 5/12/16 |
| NP | Paleontology | Surface disturbance will be in fill, alluvium, or geologic formation with very low potential to have vertebrate fossils. | Michael Leschin | 5/12/16 |
| NP | Vegetation: BLM Sensitive | After review of the BLM sensitive plant species for the proposed project area, there is no potential habitat or known BLM sensitive plant species populations within the project area. | Karl Ivory | 5/4/16 |
| NI | Vegetation: Invasive Species / Noxious Weeds | The project area is within UDOT's ROW. Annual weed treatments within the ROW are the responsibility of the ROW holder. Surface disturbance can introduce/spread invasive species/noxious weeds. By following BMPs and power washing vehicles and equipment at a commercial facility to remove mud and debris prior to surface disturbance, the possibility of introducing or spreading invasive species/noxious weeds will be lessened. | Stephanie Bauer | 5/12/16 |
| NP | Vegetation: Threatened, Endangered, Proposed, or Candidate | After review of the TES plant species for the proposed project area, there is no potential habitat or known TES plant species populations within the project area. | Karl Ivory | 5/4/16 |
| NI | Vegetation: Vegetation Excluding USFW Designated Species and BLM Sensitive Species | The proposed project is limited to previously disturbed areas along the highway right-of-way. Minimal disturbance would occur to the existing vegetation. | Karl Ivory | 5/4/16 |
| NP | Vegetation: Wetland/Riparian | After review of the BLM wetland/riparian database, it was determined that no wetland/riparian areas would be affected by the proposed project. | Karl Ivory | 5/4/16 |
| NP | Vegetation: Woodlands/Forestry | There are no merchantable woodland or forestry products within the project area. | Stephanie Bauer | 5/12/16 |
| NI | Rangeland Health Standards | The proposed project would have a minimal effect on ecological processes on BLM lands within the project area. Rangeland Health Standards would not be affected. | Karl Ivory | 5/4/16 |

| Determination | Resource/Issue | Rationale for Determination | Signature | Date |
|---|---|---|---|---|
| PI | Recreation | The proposed action is located within an Extensive Recreation Management Area (ERMA), which is an area where significant recreation opportunities and problems are limited and explicit recreation management is not required. Minimal management actions related to the BLM's stewardship responsibilities are adequate in these areas. Road construction and the expected delays associated with the construction and temporary road closures would affect recreation use along the Huntington/Eccles Canyons Energy Loop National Scenic Byway and adjacent recreation areas. | Josh Winkler | 5/11/16 |
| NI | Socio-Economics | No impact to the social or economic status of the county or nearby communities would occur from this project due to its small size in relation to ongoing development throughout the PFO. | Jacob Palma | 5/12/16 |
| PI | Soils | The proposed project will include a long linear trench. A small amount of mixing of horizons will occur. Due to the nature of the canyon slope and the linear project, increased erosion could occur. | Jeffrey Brower | 5/13/16 |
| PI | Visual Resources | The project area is located within a VRM Class II area where the objective is to retain the existing character of the landscape. Management activities may be seen but should not attract the attention of the casual observer. Visual contrast ratings are needed to determine impacts from key observation points along the proposed area. | Josh Winkler | 5/11/16 |
| NI | Wastes (hazardous/solid) | No chemicals subject to reporting under SARA Title III will be used, produced, stored, transported, or disposed of annually in association with the project. Furthermore, no extremely hazardous substances, as defined in 40 CFR 355, in threshold planning quantities, will be used, produced, stored, transported, or disposed of in association with the project. Trash would be confined in a covered container and disposed of in an approved landfill. No burning of any waste will occur due to this project. Human waste will be disposed of in an appropriate manner in an approved sewage treatment center. | Jeffrey Brower | 6/13/16 |
| NI | Water: Floodplains | The project as proposed will cross Huntington Creek and be attached to existing structures. | Jeffrey Brower | 6/13/16 |
| NI | Water: Groundwater Quality | The proposed project as received will not be deep enough to intercept groundwater except at stream crossings and parts of the alluvial aquifer. No measurable impacts are expected to groundwater. | Jeffrey Brower | 6/13/16 |

| Determination | Resource/Issue | Rationale for Determination | Signature | Date |
|---|---|---|---|---|
| PI | Water: Hydrologic Conditions (Stormwater) | See comments in soils. | Jeffrey Brower | 6/13/16 |
| PI | Water: Surface Water Quality | Increased soil erosion is a possibility affecting the quality of water in the stream. This will be a temporary impact. All refueling and lubing of equipment will be performed at least 100 feet from the center of the stream and in a confined fuel station. A spill prevention and response plan will be included in the NEPA document and kept on-site at all times. | Jeffrey Brower | 6/13/16 |
| NP | Wild Horse / Burro | The Proposed Project is not within a Wild Horse or Burro Herd Management Area. | Mike Tweddell | 5/12/16 |
| NI | Wildlife: BLM Sensitive | The proposed action is located adjacent to Huntington Creek which has been identified as containing two (2) BLM sensitive fish species (Flannelmouth Sucker and Bluehead Sucker). Construction of the pipeline will occur on the opposite side of the road from the creek and therefore should not have any impacts to these species. | Jared Reese | 5/13/16 |
| NP | Wildlife: Migratory Birds (including raptors) | Per GIS review, there were no known areas of high value breeding habitat within BLM lands associated with the project. | Jared Reese | 5/13/16 |
| PI | Wildlife: Non-USFWS Designated | The project is located within crucial winter habitat for both Mule Deer and Elk. Seasonal restrictions should be applied to ensure impacts to these species are reduced during this important time. | Jared Reese | 5/13/16 |
| NP | Wildlife: Threatened, Endangered, Proposed or Candidate | Per GIS review, there are no known populations or critical habitat identified for any T&E species on BLM lands. | Jared Reese | 5/13/16 |

**Final Review:**

| Reviewer Title | Signature | Date | Comments |
|---|---|---|---|
| Environmental Coordinator | | | |
| Authorized Officer | | | |

## FS IDT Checklist

**Determination of Staff:** ***(Choose one of the following abbreviated options for the left column)***

NP = not present in the area impacted by the proposed or alternative actions

NI = present, but not affected to a degree that detailed analysis is required

PI = present with potential for relevant impact that need to be analyzed in detail in the EA

| Determination | Resource/Issue | Rationale for Determination | Signature | Date |
|---|---|---|---|---|
| **Resources and Issues Considered** | | | | |
| NI | Air Quality & Greenhouse Gas Emissions/Climate change | Although there will be some emissions from equipment used to construct the pipeline, no additional emissions will occur through the life of the pipeline. Greenhouse gas emissions should be negligible when compared worldwide. | Greg T. Montgomery | 7/5/2016 |
| NP | Cultural Resources | No sites of any kind exist in the APE and there are no Tribal concerns | Charmaine Thompson | 7/6/2016 |
| NP | Cultural: Native American Religious Concerns | No tribal concerns | Charmaine Thompson | 7/6/2016 |
| NP | Designated Areas: Research Natural Areas, etc, existing or proposed | Not present in project area | Bill Broadbear | 7/7/2016 |
| NI | Designated Areas: National Scenic Byways | Scenic Byway not affected along road ROW. Utah Highway 31 is designated as a National Scenic Byway. Approximately 0.15 mile of the pipeline route is located on National Forest System lands adjacent to the Scenic Byway. Once pipeline installation is completed, efforts should be made to return disturbed areas to pre-construction conditions. | Daniel Luke | 7/6/2016 |
| NP | Designated Areas: Wild and Scenic Rivers | No present in project area | Bill Broadbear | 7/7/2016 |
| NP | Designated Areas: Wilderness | Not present in project area | Daniel Luke | 7/6/2016 |
| NI | Fuels/Fire Management | Must use spark arresters when removing vegetation. Must disperse/discard all combustible fuel piles upon completion of pipeline. | Brandon Hoffman | 7/5/2016 |
| NI | Geology / Minerals / Energy Production | This pipeline will intersect four active federal coal leases. Construction of the pipeline within the ROW will not affect coal resources or reduction in coal mining on leases. Construction of the pipeline should not affect the NEWAU culinary pipeline. | Jeff Salow | 7/5/2016 |
| NP | Inventory Roadless | Not present along road ROW | Daniel Luke | 7/6/2016 |

| Determination | Resource/Issue | Rationale for Determination | Signature | Date |
|---|---|---|---|---|
| NI | Lands/Access | A review of FS records showed that the proposed action is compatible with existing land use authorizations. The potentially affected ROW holders were notified and none commented on the proposed project. | Anita Jones | 7/1/2016 |
| NI | Livestock Grazing | The Proposed Project Area is located in the Gentry C&H allotment. The pipeline will have negligible effects on grazing except during construction where it will limit livestock movement from one side of the pasture to the other. By avoiding work on this project from mid-June to mid-July, conflicts with livestock grazing will be avoided. | Steven Cox | 7/11/2016 |
| NI | Paleontology | There is a very low probability of encountering vertebrate fossils in alluvium, or geological formations within the existing ROW. No impacts to vertebrate fossils should occur due to construction of the pipeline. | Jeff Salow | 7/5/2016 |
| NP | Vegetation: FS Sensitive | No sensitive plant species are known to occur in the project area. The BA/BE completed for this project details the rationale. | Kim Anderson | 7/6/2016 |
| NI | Vegetation: Invasive Species / Noxious Weeds | Soil disturbance can introduce/spread invasive species/noxious weeds. By following BMPs and power washing vehicles and equipment at a commercial facility to remove mud and debris prior to surface disturbance, the possibility of introducing or spreading invasive species/noxious weeds will be lessened. Weed treatment of pipeline corridor will be conducted annually for 5 years following disturbance. After the initial 5 years, the corridor will be monitored annually and treated as needed to keep invasive plants/noxious weeds from establishing. | Mark Chamberlin | 7/6/2016 |
| NP | Vegetation: Threatened, Endangered, Proposed, or Candidate | No Threatened, Endangered, Proposed, or Candidate plant species are known to occur in the project area. The BA/BE completed for this project details the rationale. | Kim Anderson | 7/6/2016 |
| NI | Vegetation: General vegetation | Proposed project to occur in previously disturbed road right-of-way. | Kim Anderson | 7/6/2016 |
| NI | Vegetation: Wetland/Riparian | Riparian area outside the proposed project area. | Kim Anderson | 7/6/2016 |
| NI | Vegetation: Woodlands/Forestry | Disturbance will be restricted to the identified corridor. Although some pinyon-juniper or other conifers may be removed, numbers will be limited and effects to forest and woodland vegetation landscape wide should be minimal. | Greg T. Montgomery | 7/5/2016 |

| Determination | Resource/Issue | Rationale for Determination | Signature | Date |
|---|---|---|---|---|
| NI | Recreation | Recreation use is limited to low levels of dispersed camping along the Rilda Canyon road and non-motorized trail use of system trail #5962 (Rilda Right Fork trail, 0.6 mile). Once pipeline construction is completed vehicle access to dispersed campsites and for trailhead parking should be re-established as needed. | Bill Broadbear | 7/7/2016 |
| PI | Soils | The Proposed Project will include a long trench that will run parallel to the road. As the topsoil is removed, some mixing can occur. Also because of the topography and the linear pipeline, soil erosion could occur because vegetation has been removed, exposing the soil surface. This can be minimized by reseeding the project area after project completion. | Steve Cox | 7/11/2016 |
| NI | Visual Resources | Utah Highway 31 is designated as a National Scenic Byway. Approximately 0.15 mile of the pipeline route is located on National Forest System lands adjacent to the Scenic Byway. Once pipeline installation is completed, efforts should be made to return disturbed areas to pre-construction conditions. | Bill Broadbear | 7/7/2016 |
| NI | Wastes (hazardous/solid) | Concurs with BLM rational for determination (see BLM checklist). | Carla Gleave | 7/5/2016 |
| NI | Water: Floodplains, wetlands, municipal watersheds | The proposed project will cross Huntington Creek and merge into existing infrastructure. The floodplain and municipal watershed will not be affected to a measurable degree. | Steve Cox | 7/11/2016 |
| NI | Water: Ground/surface quality or quantity | The prosed pipeline will not be deep enough to meet the groundwater except at stream crossings and shallow parts of the alluvial aquifer. No measurable impacts on the groundwater are expected unless erosion of soil from the site occurs. By reseeding the pipeline, erosion will be minimized. | Steve Cox | 7/11/2016 |
| PI | Wildlife: FS sensitive | The BA/BE completed for this project details the rationale. | Jeff Jewkes | 8/12/2016 |
| PI | Wildlife: MIS | The BA/BE completed for this project details the rationale. | Jeff Jewkes | 8/12/2016 |
| PI | Wildlife: Migratory Birds (including raptors) | The BA/BE completed for this project details the rationale. | Jeff Jewkes | 8/12/2016 |
| PI | Wildlife: Non-USFWS Designated | The BA/BE completed for this project details the rationale. | Jeff Jewkes | 8/12/2016 |
| NI | Wildlife: Threatened, Endangered, Proposed or Candidate | The BA/BE completed for this project details the rationale.<br>Is the proposed project in sage grouse PHMA or GHMA? Yes ☐ No ☒ | Jeff Jewkes | 8/12/2016 |
| NI | Fisheries: MIS | See specialist report | Pamela Manders | 7/9/2016 |

| Determination | Resource/Issue | Rationale for Determination | Signature | Date |
|---|---|---|---|---|
| NI | Fisheries: FS Sensitive | See BA/BE | Pamela Manders | 7/9/2016 |

**Final Review:**

| Reviewer Title | Signature | Date | Comments |
|---|---|---|---|
| Environmental Coordinator | | | |
| Authorized Officer | | | |

# Appendix C. Response to Scoping Comments

One unique comment letter was received on behalf of Heal Utah and the Sierra Club, and over 855 form letters were submitted electronically, with 787 of those submitted within the established 30 day comment period.

| Comment Number | Subject | Comment | Consideration of Comment | Issue or Alternative (Y/N) |
|---|---|---|---|---|
| **Cara L., plus 854** | | | | |
| 1 | NEPA procedure | The Forest Service must conduct a full environmental impact statement for this proposal and consider all available alternatives. | An environmental assessment (EA) shall be prepared for proposals as described in § 220.4(a) that are not categorically excluded from documentation (§ 220.6) and for which the need of an EIS has not been determined (§220.5). (36 CFR 220.7(a))<br>The purpose of an EA is to determine if a proposed action or its alternatives have potentially significant environmental effects. An EA:<br>1. Provides evidence and analysis for determining whether to prepare an EIS;<br>2. Aids agency compliance with NEPA when no EIS is necessary; and<br>3. Facilitates preparation of an EIS when one is necessary.<br>(40 CFR 1508.9(a))<br>The EA process concludes with either a Finding of No Significant Impact (FONSI) or a determination to prepare an Environmental Impact Statement. | N |
| 2 | Waste management | Groundwater data shows that PacifiCorp's waste handling practices have created an imminent and substantial endangerment to public health and the environment. | Discharge permits are issued by the State of Utah Department of Environmental Quality Division of Water Quality (UDWQ). Monitoring of the groundwater would continue to occur through this project in accordance with their permits. Any compliance issues would be address by the responsible agency. | N |
| 3 | Water quality | PacifiCorp's proposal will not further the government's goal of ensuring that this mine waste will not pollute Huntington Creek (i.e., the proposal may pollute Huntington Creek). | MSHA and UDOGM will not allow any water retention as part of the Deer Creek closure plans; water must now be directed to the Rilda Canyon portals to flow unimpeded out of the mine. A discharge permit has not and will not be issued for the Rilda Canyon even if the water met water quality standards | N |

| Comment Number | Subject | Comment | Consideration of Comment | Issue or Alternative (Y/N) |
|---|---|---|---|---|
| 4 | Water management | PacifiCorp's proposal simply moves the point of discharge from Rilda Canyon to the Huntington Power Plant. | because the Rilda Canyon portals are within Category 1 Waters per UAC R317-2.<br><br>Category 1 Waters: Waters which have been determined by the Board to be of exceptional recreational or ecological significance or have been determined to be a State or National resource requiring protection, shall be maintained at existing high quality through designation, by the Board after public hearing, as Category 1 Waters. New point source discharges of wastewater, treated or otherwise, are prohibited in such segments after the effective date of designation.<br><br>Therefore the point of discharge must be moved from Rilda Canyon.<br><br>To maintain the water quality in Huntington Creek, any discharge of water into Huntington Creek is governed by Utah Pollutant Discharge Elimination System (UPDES) permits and UDWQ. The transport of the water to the power plant settling basis is considered to be an acceptable option by the governing agencies because discharge would be in compliance with the existing permits.<br><br>In addition, proper management of the intercepted groundwater would allow for closure of the mine and reclamation activities to be implemented. | N |

| Comment Number | Subject | Comment | Consideration of Comment | Issue or Alternative (Y/N) |
|---|---|---|---|---|
| **Rob Dubuc on Behalf of Heal Utah and the Sierra Club** | | | | |
| 1 | Water quality | this proposed project has a reasonable potential to violate water quality standards and exacerbate existing waste management and water quality problems at the Huntington Power Plant. Therefore, we request that a full environmental impact statement (EIS) be undertaken before any decisions are made with regard to the project.<br><br>These current coal ash management problems at PacifiCorp's Utah coal plants underscore the need to undertake a full environmental impact statement (EIS) related to its Deer Creek Mine Closure Pipeline proposal. In light of this recent coal ash spill, approval of the disposal of an additional 315 million gallons/year of mine drainage at the Huntington power plant without a full environmental impact statement would be arbitrary and capricious based on the existing EA. | An environmental assessment (EA) shall be prepared for proposals as described in § 220.4(a) that are not categorically excluded from documentation (§ 220.6) and for which the need of an EIS has not been determined (§220.5). (36 CFR 220.7(a))<br><br>The purpose of an EA is to determine if a proposed action or its alternatives have potentially significant environmental effects. An EA:<br><br>1. Provides evidence and analysis for determining whether to prepare an EIS;<br>2. Aids agency compliance with NEPA when no EIS is necessary; and<br>3. Facilitates preparation of an EIS when one is necessary.<br><br>(40 CFR 1508.9(a))<br><br>The EA process concludes with either a Finding of No Significant Impact (FONSI) or a determination to prepare an Environmental Impact Statement. | N |
| 2 | Water quality | The EA fails to present any water quality data for the discharge. | Water quality information was summarized and considered in the EA. Detailed analysis of the water quality is in the Hydrology report (USDA FS 2016). | Y |
| 3 | Water Management | The EA fails to document the fate of polluted mine drainage once it is disposed of at the power plant. | The intercepted groundwater will flow from the downstream end of the pipeline into the settling pond (raw water pond) at the Huntington Plant. In the settling pond, the water will mix with the diverted water from Hunting Creek and then be used in the plant operations. This information and further details are found in the EA and the hydrology report in the project record (USDA FS 2016). | Y |
| 4 | Water quality | The EA fails to assess whether the polluted mine drainage water is suitable for use in the power plant. | This is beyond the scope of this project. PacifiCorp is responsible for the management of the power plant operations. | N |

| Comment Number | Subject | Comment | Consideration of Comment | Issue or Alternative (Y/N) |
|---|---|---|---|---|
| 5 | Water management | The EA fails to assess whether the Raw Water Pond/Settling Basin has the capacity to store an addition 864,000 gallons/day of water. | The intercepted groundwater from the mine will be used in lieu of the fresh water from Huntington Creek, thus no additional storage of water is needed. The intercepted mine water will replace gallon for gallon water diverted from Huntington Creek to maintain the current water levels. | N |
| 6 | Water quality | The EA fails to assess whether the addition of 315 million gallons of polluted mine drainage to the Raw Water Pond/Settling Basin will exacerbate the history of seepage, resulting in an unpermitted discharge of untreated water to Huntington Creek. | The quantity of water in the settling pond will remain the same under current operation because the intercepted groundwater from the mine will be used in lieu of the fresh water from Huntington Creek. Any discharge of water is regulated by the UDWQ. | N |
| 7 | Water quality | The EA fails to assess whether the Raw Water Pond/Settling Basin will achieve any level of "treatment" of the polluted mine drainage, and if so, what level of treatment will occur for all pollutants. | The intercepted groundwater will be mixed with the diverted water from Hunting Creek water in the Settling Pond. Based on the current water quality and the discharge permits no additional treatment is required by the UDWQ. | N |
| 8 | Water quality | The EA fails to assess whether application of additional "irrigation" water to the research farms will result in an over-application of water causing an exacerbation of pollution to groundwater and/or Huntington Creek. | No additional irrigation proposed. The intercepted groundwater from the mine will be used in lieu of the diverted Huntington Creek water in the cooling towers and subsequent irrigation. The irrigation that occurs would be in compliance with PacifiCorp's permits. | N |
| 9 | Water quality | The EA fails to assess whether there will be uptake of pollutants in the polluted mine drainage in the "crops" grown on the research farm, and if so, will the degree of uptake of pollutants into the vegetation ensure that groundwater/surface waters will not exceed water quality standards. | The EA and the Hydrology Report evaluates the water quality of the intercepted groundwater and the potential effect to the environment. All discharge must be in compliance with UPDES permits. In addition, the intercepted groundwater will be used in the cooling towers in lieu of water from Huntington Creek, directly reducing the amount of fresh water pulled from Huntington Creek for the cooling towers. While the intercepted groundwater is used in the cooling towers, the equivalent amount of fresh water will remain in the creek (expected to be 300 – 600 GPM). | N |
| 10 | Water quality | The EA fails to assess whether disposal of the polluted mine drainage at the Huntington Power Plant will result in an exceedance of salt loadings from the power plant in violation of the Colorado River Salinity standards. | The intercepted ground water will be mixed with the water from Huntington Creek in the Settling Pond. Approximately 97% is consumed by evaporation, and only 3% is transferred to the irrigation storage reservoir. | N |

| Comment Number | Subject | Comment | Consideration of Comment | Issue or Alternative (Y/N) |
|---|---|---|---|---|
| 11 | Water quality | The EA fails to assess whether the disposal of 315 million gallons/year of polluted mine drainage will exacerbate the existing imminent and substantial endangerment created by PacifiCorp's existing waste management practices. | The irrigation on the research farm and water monitoring is in compliance with the requirements of PacifiCorp's current permits (Ground Water Discharge Permit<br><br>Permit No. UGW150002). Any discharge would meet state and federal standards. | N |
| 12 | Water quality | The EA fails to assess whether the disposal of 315 million gallons/year of polluted mine drainage will exacerbate the existing impairments to Huntington Creek at the power plant site or downstream, including TSD, selenium, and temperature. The Clean Water Act prohibits new discharges containing pollutants exacerbating existing impairment. | Detailed water quality information of the intercepted groundwater from the Hydrology report was considered and summarized in the EA.<br><br>The intercepted groundwater in the mine is estimated to initially have a total iron concentration is 2-2.5 mg/L and an estimated TDS concentration of 500 mg/L. The concentration of iron is the only elevated analyte in the mines groundwater that exceeds water quality standards for PacifiCorp's Deer Creek Canyon discharge permit (UT0023604). All other chemical parameters are within permit limitations. The current discharge permit standard for iron is 1 mg/L. TDS less than 500 mg/L are allowed to be discharged. | Y |
| 13 | Permitting | The EA fails to require a Clean Water Act 401 certification from the State of Utah despite the apparent need for a Clean Water Act 404 permit for the project and the major federal action contemplated under NEPA. | PacifiCorp as the applicant is responsible for acquiring all necessary permits. | N |
| 14 | NEPA procedures | EA fails to consider other reasonable viable alternatives, such as construction of a water treatment facility at the Huntington Power Plant or extension of the water pipeline to the Town of Huntington's sewer treatment plant or next closest existing treatment plant. | Several alternatives including the ones mentioned were considered, but dismissed from further analysis in section 2.4 in the EA. | N |

| Comment Number | Subject | Comment | Consideration of Comment | Issue or Alternative (Y/N) |
|---|---|---|---|---|
| 15 | Permitting | The EA fails to analyze whether PacifiCorp has a federal and/or state water right to appropriate the mine groundwater into its power plant processes. | Water discharged from the mine will be used by PacifiCorp at the Huntington Plant under PacifiCorp's existing shares that it owns in the Huntington Cleveland Irrigation Company (HCIC). There will not be any new water rights required by the State Engineer's Office in order for PacifiCorp to use the water at the Huntington Plant, only a change to HCIC's existing water rights. PacifiCorp and HCIC are currently in the process of seeking approval from the State Engineer's Office (through the Change Application process) to add the mine portal as an approved point of diversion to HCIC's existing water rights. Once approved, PacifiCorp will be able to use the mine discharge water under its existing shares it owns in HCIC. | N |
| 16 | Water quality | The proposed disposal of 315 million gallons/year of polluted mine drainage has the reasonable potential to result in a direct point source discharge, or hydrologically connected point source discharge to Huntington Creek. | This EA analyzes the effects of the installation of the pipeline and the current water management proposal. The majority of the intercepted ground water (97%) will be consumed (evaporated) in the cooling towers for the life of the plant. The Huntington Plant is currently projected to operate into the 2030s. Because of the inactive (limited vertical recharge), perched nature of the intercepted groundwater within the mine, the mine outflow rates are expected to diminish with time.<br><br>When the intercepted groundwater meets the water quality standards, the water could be discharged directly into Huntington Creek if it met the discharge permit requirements. The UDWQ would analyze the effects of the discharge permit at the appropriate time. | N |

## Appendix D. Plan of Development (POD)

# 1st Right Rilda Canyon Portals to Huntington Plant Pipeline Plan of Development

## 1. Purpose and Need

### a. What will be constructed?

Buried 10-inch high-density polyethylene (HDPE) pipeline with associated air reliefs from Deer Creek Mine 1st Right Portals to Huntington Power Plant. PacifiCorp proposes to construct the buried pipeline within the existing rights-of way of Emery County Road #306 and State Route 31 (SR-31) from the Deer Creek Mine Rilda Canyon portals to existing settling ponds at the Huntington Power Plant. The route was selected to minimize disturbance in Rilda and Huntington Canyons. An overview map is included as Attachment A.

### b. Commodity to be transported and for what purpose?

Intercepted groundwater from Deer Creek Mine will be transported to settling ponds at the Huntington Power Plant. The purpose of the pipeline is to gravity flow intercepted groundwater from the northern portion of the Deer Creek Mine to prevent prohibited discharges within Category 1 waters. The geologic structure of the mine will route intercepted groundwater from the northern portion of the mine to the Rilda Canyon 1st Right Portals. If this pipeline is not constructed, PacifiCorp will be required to keep the mine open and pump the intercepted water to Deer Creek Canyon portals for permitted discharge.

Initially, the water will have total iron that is elevated above background levels. The elevated iron concentrations are related to a carbonaceous mudstone in-seam split in the lower portion of the Hiawatha Seam containing pyritic iron. The elevated sulfur is likely in the form of gypsum and is found in the floor and the bottom 2 feet of the unmined pillars. Sulfur in coal may be in oxidized, reduced, and native forms. Oxidized sulfur includes minerals such as gypsum ($CaSO_4 \cdot nH_2O$) and anhydrite ($CaSO_4$), which form in evaporative environments and as secondary mineralization. Reduced forms include iron sulfide minerals such as pyrite and marcasite ($FeS_2$) that are the source of the iron.

This water must be settled to allow the iron to precipitate; once the iron has settled out, no other treatment is necessary to bring water quality to standards. The level of iron (total form) in the groundwater will dissipate over a period of time to background levels of typical intercepted groundwater. The volume of the intercepted groundwater will follow a similar trend, slowly dissipating due to the lack of recharge from the initial projection of approximately 600 gallons per minute (gpm) to approximately 200 gpm. The proposed pipeline will remain in use as long as the flow of intercepted groundwater continues.

## c. Is the pipeline for a gathering system, trunk line, or distribution line?

The pipeline is a single use distribution line from mine portals to existing settling ponds.

## d. Will it be surface or subsurface?

The pipeline will be buried below the land surface to a minimum depth of the 5 feet, except at the bridge and diversion structure crossings (see 2.c). In addition, the buried pipeline will be offset from culinary pipelines by a minimum distance of 10 feet, as specified by the State of Utah regulations (UAC R317-401-5).

## e. Length and width of the right-of-way and the area needed for related facilities

The total proposed pipeline is approximately 29,528 feet long (5.6 miles), and crosses multiple landowners. The permanent right-of-way would be 12 feet wide. Where possible, an additional 20 feet of temporary right-of-way for construction would be needed for soil stockpiling and equipment operation.

An estimate of length for the pipeline right-of-way by landownership is shown below:

**Table 1. Length of proposed pipeline right-of-way**

| Proposed Right-of-Way Length | |
|---|---|
| **Landownership** | **Total length** |
| USFS | 9,622 feet (1.8 mi) |
| BLM | 6,388 feet (1.2 mi) |
| Private | 13,518 feet (2.6 mi) |
| **Total** | 29,528 feet (**5.6 mi**) |

## f. Is this ancillary to an existing right-of-way?

The proposed pipeline would be within the Emery County Road #306 right-of-way for about 11,835 feet, and within the SR-31 right-of-way (UTU-0-17187) for about 14,606 feet. Of the total 32-foot right-of-way, approximately 2.7 acres of the temporary disturbance would occur beyond the Emery County Road #306 right-of-way. Up to 1.7 acres of new disturbance would cross USFS-administered land, and 1.0 acre of new disturbance would cross private land.

## g. List alternative routes or locations

Other alternatives were considered, but eliminated as infeasible based on the following rationale:

**Alternative #1** – No pipeline; water would be impounded in the mine with bulkheads. On January 20, 2015, PacifiCorp originally applied to install a series of hydrologic bulkheads to the Mine Safety and Health Administration (MSHA). These hydrologic bulkheads would have redirected the flow of intercepted groundwater from the northern portion of the mine to the portals located in Deer Creek Canyon. Discharge of mine water at the Deer Creek portals is approved under an existing permit issued by the State of Utah Division of Water Quality. PacifiCorp amended the mine closure application to MSHA on several occasions to address safety concerns. However, on April 12, 2016, after nearly a year and half of extensive preparation work, PacifiCorp was notified by Utah Division of Oil, Gas and Mining (UDOGM)

and MSHA that water retention in the mine would not be allowed. This response by the state and federal agencies necessitates that PacifiCorp develop other alternatives to manage intercepted groundwater that would otherwise discharge from the Rilda Canyon portals in violation of UAC R317-2.

A chronology of the bulkhead application is summarized below:

2014

- Reviewed historic bulkhead installations (failures and successes)
- Discussed application protocol with MSHA District 9 Price Field Office
- Designed bulkhead installation based on the National Institute for Occupational Safety and Health (NIOSH) IC 9506 "Guidelines for Permitting, Construction, and Monitoring of Retention Bulkheads in Underground Coal Mines"
- Developed wells from surface for long term monitoring of bulkheads
- Prepared draft application

2015

- January 6, 2015 - Meeting was held with MSHA District 9 Price Field Office
- January 20, 2015 - Initial bulkhead submittal. District 9 requests technical assistance from Mine Emergency Operations (MEO) and Mine Waste and Geotechnical Engineering Division (MWGE)
- March 2, 2015 - Deer Creek Mine receives copy of memorandum from MEO to Russell Riley dated February 23rd outlining deficiencies
- March 2, 2015 - Deer Creek submits Addendum #1 (add air sampling tubes) to address MEO's concerns
- March 12, 2015 - Submitted Addendum #2 (addressing possible impounded water by primary bulkheads)
- April 1, 2015 - Submitted Addendum #3 (relocation of secondary bulkheads from 1st Right x-28 to 1st Right x-4
- April 10, 2015 - Submitted Addendum #4 (re-sequencing mine closure to provide inspection of both sets of bulkheads)
- May 29, 2015 - Deer Creek received disapproval letter from District 9 with technical reasons for disapproval
- July 14, 2015 – Submitted Addendum #5 (bulkhead application extensively revised to address concerns of the MSHA Mine Waste and Geotechnical Engineering Division letter dated May 15, 2015)
- September 8, 2015 – Deer Creek received disapproval letter from District 9 with enclosed August 21, 2015 report by MWGE
- PacifiCorp retained J.T. Boyd to conduct a third-party independent review of the Deer Creek Mine closure plan
- PacifiCorp met with Assistant Deputy Director of Labor to outline concerns with MSHA's jurisdictional authority related to mine closure
- December 1, 2015 received notification from District 9 stating, "We do not have the authority to approve bulkheads for the purposes described"
- December 18, 2015 PacifiCorp submits application to UDOGM to construct interlocking parallel plugs and seal enhancement
- April 12, 2016 PacifiCorp receives amendment denial from UDOGM:

  > "After spending considerable time reviewing RMP [Rocky Mountain Power] proposed mine closure and particularly the water retention design, the Division, in a routine phone call with Mr. Russell Riley of MSHA on April 11, 2016 was

> told that his letter of December 1, 2015 had been interpreted incorrectly by you and also by the Division. He emphatically stated that the letter was intended as an unequivocal denial of the plan. He stated that under no circumstances could MSHA approve a water-retaining structure as part of mine closure plan. He asserted that the letter was referring to MSHA's lack of legal authority to approve a plan that requires water retention, not its jurisdictional authority to approve the closure plan. He affirmed that MSHA does have jurisdiction to review and approve mine closure plans and did not waive that jurisdiction for the RMP plan."

Alternative 1 has been rejected by MSHA and UDOGM. Feasible alternatives are very limited without water retaining structures underground.

**Alternative 2** – A pumping station would be built at the Rilda Canyon 1st Right portals. A pipeline would be installed running from this pump station to the Left Fork portals. Water discharging at the 1st Right Rilda Canyon portals would be pumped back into the mine at the Left Fork portals, where it would gravity feed into the Deer Creek Mine workings. This alternative is impractical as it requires permanent pumping facilities to be constructed at the mine site on USFS-administered land, namely the pump station, power lines, and communication lines. These facilities would require permanent periodic maintenance. In addition to the permanent features, risk associated with equipment failure and discharge in violation of UAC R317-2 is moderate.

**Alternative 3** – No action; keep the mine open and continue to pump intercepted groundwater to Deer Creek Canyon portals. This alternative requires permanent disturbance on public lands, and does not allow for mine closure and reclamation.

## 2. Right-of-way location

### a. Legal description

All sections are within T 16 S, R 7 E; Sections 22, 23, 26, 27, 28, 29, 25, 35, and 36.

Detailed tables showing landownership, quarter-quarter sections, and parcel area are included as Attachment B. Legal description by landownership is summarized in the following table:

**Table 2. Legal description of proposed right-of-way**

| Sections in T 16 S, R 7 E | |
|---|---|
| **Owner** | **Section #** |
| USFS | 22, 27, 28, 29 |
| BLM | 26, 27, 35 |
| Emery County | 35 |
| PacifiCorp | 22, 28, 36 |
| Andalex | 22, 27 |
| COP | 22, 23, 26 |
| UDOT | 36 |

A map with section details and landownership is included as Attachment C.

### b. Site-specific engineering surveys for critical areas

Directional drilling will be employed to install the pipeline under Emery County Road #306 and SR-31, at two locations each; one on either side of the Huntington River bridge at the mouth of Rilda Canyon; and the entrance to Rilda Canyon and at Huntington Power Plant diversion dam. The access road for Rhino mine (Bear Canyon Road) and Bear Creek will also be drilled, to prevent disruption to Rhino's coal deliveries and avoid impacts to the stream channel.

Exhibits showing the locations of the directional bores are included as Attachment D. Drill pits will be excavated on each side of the crossing, and a vacuum trailer will ensure that drilling mud does not discharge into the adjacent waters.

The pipeline will include a shut-off valve at the mine entrance.

### c. Maps and drawings showing river crossings

The pipeline will be attached to an existing bridge and diversion structure at each crossing of Huntington Creek. The pipeline will not be buried at these locations. Exhibits showing these locations are included as Attachment D.

### d. Acre calculation of the right-of-way by land status

The pipeline right-of-way crosses three types of landownership; the temporary 32-foot right-of-way includes the permanent 12 feet and an additional 20 feet (where possible). Details are shown in the following table:

**Table 3. Right-of-way calculations by land status**

| Jurisdiction | Permanent 12-foot ROW (acres) | Temporary 20-foot ROW (acres) | Total 32-foot area (acres) |
|---|---|---|---|
| USFS | 2.7 | 4.4 | 7.0 |
| BLM | 1.8 | 2.9 | 4.7 |
| Private | 3.7 | 6.4 | 10.1 |
| **Total** | **8.1** | **13.7** | **21.8** |

## 3. Facility Design Factors

### a. Pipeline pressure standards

#### i. Pipe wall thickness and pounds per square inch (psi) rating

The pipe size will be 10-inch diameter HDPE DR 17, 0.507-inch wall thickness, pressure rating 125 psi.

### b. Toxicity of pipeline product

The product will be groundwater with elevated Total Iron (Fe).

PacifiCorp has had independent laboratories analyze the intercepted groundwater samples from areas within the mine that will gravity flow to the Rilda Canyon portals. Compared against the Environmental Protection Agency (EPA) Priority Pollutant List, which consists of 129 priority pollutants, none of the pollutant parameters were detected. Results of these analyses are included as Attachment E.

The intercepted groundwater in the mine is estimated to initially have a total iron concentration of 2-2.5 mg/L and an estimated total dissolved solids (TDS) concentration of 500 mg/L. The elevated levels of iron in the groundwater are from the oxidation of the mineral pyrite in areas of the mine that contain pyrite mineralization within the coal seam. The concentration of iron is the only elevated analyte in the mine groundwater that exceeds water quality standards for PacifiCorp's Deer Creek Canyon discharge permit (UT0023604). The current discharge permit standard for iron is 1 mg/L. All other chemical parameters are within permit limitations. A TDS concentration of less than 500 mg/L is allowed to be discharged.

The measured average pH of water within the mine is 7.5. The host rock has a high content of carbonate minerals, which results in naturally high alkalinity levels in the ground water. Acid mine drainage conditions will not occur because the alkalinity in the groundwater and carbonate buffers in the host rock neutralize any acid generation due to the oxidation of pyrite.

Water from Huntington Creek is diverted into the settling pond at 7,000 to 10,000 gpm. Water from the settling pond is used for plant operations, cooling towers, and boiler vents. The water is diverted from Huntington Creek at the same rate that it is used in the operations of the plant. Of the 7,000-11,000 gpm of water used in plant operations, approximately 97 percent of the water is evaporated off. The remaining 3 percent is transferred to the irrigation storage reservoir and used on crop research fields. The water used for irrigation on the research fields is regulated by the Utah Department of Environmental Quality, Division of Water Quality by authorization of a Ground Water Discharge Permit. The permit requires that water quality be measured periodically in monitoring wells in order to maintain compliance with the Ground Water Discharge Permit (UGW150002).

Diversion water entering the settling pond from Huntington Creek will be composed of similar concentrations of iron and TDS as measured at the sampling point in Huntington Creek, as summarized in Table 4.

**Table 4. Water Quality Parameter Measurements**

| Water Quality Parameter | Huntington Creek (mg/L) | Intercepted groundwater in mine (mg/L) | Settling pond water (mg/L) |
|---|---|---|---|
| Selenium | <0.002 *1 | <0.02 *2 | <0.002 *1 |
| Iron | 0.48 *3 | Projected at 2.0-2.5 *4 | <0.5 *5 |
| TDS | 244 | 500 | 248-262 |
| pH | 8.4 *1 | 7.5 | 8.4 |

*1: Based on samples collected by PacifiCorp on Huntington Creek above the plant, Emery County Road 304/Huntington Creek bridge crossing.
*2: Based on samples collected by PacifiCorp on in-mine groundwater projected to gravity flow from the Rilda Canyon 1st Right Portals. Value limited by the reporting criteria of the analyzing equipment.

| Water Quality Parameter | Huntington Creek (mg/L) | Intercepted groundwater in mine (mg/L) | Settling pond water (mg/L) |
|---|---|---|---|
| *3: Based on samples collected by PacifiCorp on Huntington Creek above the plant, Emery County Road 304/Huntington Creek bridge crossing. Total iron value influenced by sediment load in Huntington Creek. Projected total iron in the Plant settling pond.<br>*4: Total iron from the mine will dissipate over time, projected at <1.5 mg/L in less than 4 years.<br>* 5: Total iron of the raw water pond influenced by sediment load in Huntington Creek. Sampling of the raw water pond by PacifiCorp indicates precipitation of the sediment reduces the total iron to <0.1 mg/L. | | | |

At a maximum flow rate of 600 gpm of intercepted groundwater and a minimum flow rate of 7,000 gpm diversion water, the intercepted groundwater would be diluted by a factor of greater than ten times the volume of water entering the raw water pond from the Huntington Creek diversion. Using these flow rates and the high estimated iron concentration of 2.5 mg/L, the intercepted groundwater would be diluted to 0.2 mg/L plus the measured average background concentration (0.48 mg/L) of iron in Huntington Creek, minus the precipitation of iron (~1 mg/L), due to sediment loading from the Huntington Creek diversion, will yield approximately 0.5 mg/L. As the flow of diversion water increases and the intercepted groundwater flow decreases, the total iron concentration will decrease. Groundwater concentrated in iron discharged into the settling pond at the power plant will precipitate iron hydroxide and other ferric solids, which would stain sediment and rock with orange-rust coloration.

The level of iron in the groundwater is anticipated to dissipate to background levels of typical intercepted groundwater over the next 5 to 10 years. The decrease will occur as the surface area of exposed pyrite is consumed and available oxygen diminishes.

The volume of the intercepted groundwater would likely follow a similar trend. The amount of flow is expected to decrease with time because there is no active recharge from perched aquifers. Perched aquifers are isolated lenses of sandstone trapped between shales and mudstones. Once the perched aquifers reservoirs are emptied, the flow of groundwater coming from the mine will diminish from the initial projection of approximately 600 gpm to 200 gpm.

Water quality will be monitored on a monthly basis in perpetuity unless the state changes the point-source discharge regulations.

## c. Anticipated operating temperatures

The pipeline will be buried at least 5 feet deep, well below the frost line, to prevent freezing. The pipeline will not be heated; water will flow at the ambient ground temperatures (estimated to be 40 degrees Fahrenheit minimum). The short unburied segments (Emery Road #306 bridge crossing and Huntington Plant Diversion Dam crossing) will be enclosed in a steel casing with closed-cell foam insulation. These insulated crossings will not be exposed long enough to result in freezing at the expected flow rates.

## d. Depth of the pipeline

The pipeline will be buried at a minimum depth of 5 feet to be below the frost line and meet requirements for separation from the roadway. Where necessary, it may be buried deeper than 5 feet to provide the required minimum distance from culinary pipelines as specified by the State of Utah regulations (UAC R317-401-5).

### e. Permanent width or size

The permanent right-of-way width is 12 feet.

### f. Temporary areas needed

20 feet on the non-road side of the permanent right-of-way.

## 4. Additional Components of the Right-of-way

### a. Connection to an existing right-of-way

The proposed pipeline right-of-way does not connect to an existing right-of-way, but does parallel or lay within sections of existing pipeline and road rights-of-way.

#### i. Existing components on or off public land

There are no existing components for this project. The right-of-way will provide water conveyance from an existing mine to the existing settling ponds at the Huntington Power Plant.

#### ii. Possible future components

Future components are not anticipated at this time.

### b. Location of pumping and/or compressor stations

Pumping or compressor stations are not proposed; the pipeline will operate as gravity flow. Air vents will be installed at appropriate locations along the alignment, within the right-of-way. The air vents will typically be 3 to 4 feet high, and will be painted to blend as much as possible with the surrounding area to reduce the visual contrast.

### c. Need for sand and gravel and where it will be obtained

The pipe will be bedded in sand or similar material. Where possible, bedding material will be produced on-site by screening the native materials. We anticipate obtaining additional bedding materials from commercial sites near the project area.

### d. Location of equipment storage areas

Equipment will be stored at the mine property, the Huntington Power Plant, or on private property along the alignment.

## 5. Government Agencies Involved

### a. FERC, USFWS, USACE

- FERC will not be involved.
- The pipeline crosses USFS- and BLM-administered land.
- USFWS could be involved through the section 7 consultation process if listed species may be impacted.

- USACE could be involved through the application for crossings of ephemeral channels; the pipeline will cross perennial waters on existing structures.

### b. State and local agencies that may be involved

- Utah Division of Oil, Gas, & Mining will be involved through oversight and permitting of mine-related facilities.
- Utah Department of Transportation will be involved through permitting of the pipeline within the SR-31 right-of-way.
- Emery County, Utah will be involved through permitting of the pipeline within the County Road #306 right-of-way.

## 6. Construction of the facilities

Construction is anticipated to take 2 to 3 months to complete. Work schedule for the construction period will be 7 days a week, daylight hours only, unless specified otherwise by surface owners, regulatory agencies, or construction contractors.

### a. Construction (brief description)

Construction will consist of excavation of a trench or direction bore, installation of the pipeline and appurtenances, refilling the trench, and reclaiming the disturbed area.

#### i. Major facilities (including vehicles and number of tons and loads)

We estimate that eight truckloads will be required to deliver the pipeline segments and associated parts.

#### ii. Ancillary facilities (including vehicles and number of tons and loads)

There are no new ancillary facilities associated with this project.

### b. Work force (number of people and vehicles)

The estimated work force is eight people. Staff includes trencher or track hoe operator, loader and operator to place pipe, pipe fusion machine operators, foreman, traffic control flaggers, and laborers. If pipeline construction is conducted at more than one segment at the same time, this number will be multiplied by the number of construction sites.

### c. Flagging or staking the right-of-way

The pipeline route and rights-of-way will be flagged or staked by a professional survey company prior to initiation of construction.

### d. Clearing and grading

Clearing and grading will be minimized to only the extents necessary to dig the trench for the pipeline itself. Debris will not be placed in stream channels. The ground surface will be graded back to original contours as the pipeline is installed.

## e. Facility construction data

### i. Description of construction process

The trench for the pipeline will be excavated with a trenching machine or track hoe excavator. Topsoil and subsoil will be segregated and stockpiled separately adjacent to the trench. Pipe segments will be laid out end-to-end along the trench at each active site. The pipeline segments will be 50 feet long, and will be heat-welded together on-site.

Bedding material will be placed in the trench below and above the pipeline. Bedding material must be clean sand or soil and must not contain stones having a maximum dimension larger than 0.5 inch. Material must be placed to a minimum depth of 6 inches under the pipe and 6 inches over the top of the pipe. The remaining backfill must not contain rock larger than 6 inches. Such bedding material serves two principal functions: protection of the pipe from mechanical damage during installation and trench filling, and stabilization of the pipe in the event of seismic shifts or frost heaves.

A tracer wire and electrical conduit will be buried above the pipeline. The tracer wire is used to locate the pipeline from the surface. The electrical conduit could be used in the future to install a fiber optic cable to the mine. This fiber optic cable would allow PacifiCorp to remove the existing power line while providing communication capabilities to continue monitoring for security of the site, without excavating a new trench. The fiber optic cable could be installed with minimal ground disturbance.

The stockpiled subsoil will be used to backfill the trench, and the topsoil will be replaced on the surface and graded to pre-disturbance contours. Large rocks that are unsuitable for fill will be placed on the surface within the road rights-of-way, outside of the safety clear zone. This rock is expected to match the exposed rock that makes up the canyon walls, and would not contrast visually. If the excavated rock does contrast with the natural surface, the contrasting material will be removed from the right-of-way and disposed of in an appropriate location off-site.

At the Rilda Canyon bridge, the pipeline will be routed under County Road #306 using a directional bore. The pipeline will cross Huntington Creek on the Rilda Canyon bridge, with the pipeline concealed in the existing girders under the west side of bridge. At the north end of the bridge, the pipeline will be routed under County Road #306 through another directional bore. Directional bores will be used under SR-31 at Rilda Canyon and near the power plant. The pipeline will be buried in a trench along the north and east side of SR-31.

The pipeline will be buried from SR-31 to the diversion structure, where it will cross Huntington Creek on the diversion structure. The pipeline will then be buried from the diversion structure to the Huntington Power Plant settling ponds.

## f. Access to, and along, right-of-way during construction

The project will take place largely within the Emery County and State of Utah rights-of-way along existing paved roads. No additional access ways or roads will be necessary.

## g. Engineering drawings and specifications for site-specific problems relating to surface use or special mitigation

Engineering drawings and specifications are included as Attachment F.

## h. Diagrams, drawings, and cross sections to help visualize the scope of the project

Diagrams, drawings, and cross sections are included in the engineered plans in Attachment F.

## i. Special equipment that will be utilized

Specialized equipment includes a mechanized trenching machine where possible, and directional boring equipment for the road crossings. Concrete drilling and boring equipment will be used to construct the bridge crossing at Rilda Canyon.

## j. Contingency planning

Contingency may be required for weather-related issues, but is not expected to be a significant factor in project completion. No other contingencies have been considered at this stage of development.

### i. Holder contacts

- PacifiCorp: Chuck Semborski (435) 687-4720
  Scott Child (801) 220-4612
- Andalex Resources, Inc.: David Hibbs (435) 888-4016
- C.O.P. Coal Development Company: Charles Reynolds (801) 857-0399
- Emery County, Utah: Wayde Nielsen (435) 381-3150

### ii. Agency contacts

- USFS: District Ranger - Darren Olsen (435) 636-3586
  Geologist - Jeff Salow (435) 636-3596
  Realty Specialist – Anita Jones (435) 636-3578
- BLM: Minerals Support Supervisor - Roger Bankert, BLM State Office (801) 539-4037
  Mining Engineer - Jeff McKenzie, BLM State Office (801) 539-4038
  Assistant Field Manager Coal - Steve Rigby, Price Field Office (435) 636-3604
  Mining Engineer - Steve Falk, Price Field Office (435) 636-3605
  Realty Specialist - Connie Leschin, Price Field Office (435) 636-3610

## k. Safety requirements

All safety requirements of the Occupational Safety and Health Administration (OSHA) will be observed during project construction. Special road flagging and traffic control will be the responsibility of the pipeline construction company. Mandatory speed limits will be posted and enforcement will be the responsibility of the contractor and the assigned project inspector. Manual on Uniform Traffic Control Devices (MUTCD)-approved warning signs will be placed along SR-31.

### l. Industrial wastes and toxic substances

There will be drilling mud and associated byproducts where directional drilling occurs. The drilling process will be managed and contained following procedures from the UDOGM. Construction contractors will also be required to adhere to the Stormwater Pollution Prevention Plan (SWPPP) and Spill Prevention and Response Plan (SPRP), which address hazardous material control. Drafts of these documents are provided as Attachment G and Attachment H, respectively.

## 7. Resource Values and Environmental Concerns

### a. Address at level commensurate with anticipated impacts

#### i. Location with regard to existing corridors

All proposed construction will take place within existing road and utility rights-of-way.

### b. Anticipated conflicts with resources or public health and safety

#### i. Air, noise, geologic hazards, mineral and energy resources, paleontological resources, soils, water, vegetation, wildlife, threatened and endangered species, cultural resources, visual resources, BLM projects, recreation activities, wilderness

The project has been designed to be consistent with the Green River District Reclamation Guidelines and Appendix R-3 of the Price RMP.

1. Air:

   There would be a short-term increase in vehicle and fugitive dust emissions during construction.

2. Noise:

   Construction will cause a temporary increase in daytime noise levels.

3. Geologic hazards:

   No conflicts with geologic hazards are known or anticipated.

4. Mineral and energy resources:
   No conflicts with mineral or energy resources are known or anticipated.

5. Paleontological resources:

   Potential impacts to paleontological resources could occur during excavation.

6. Soils:

   Impacts to soils will be minimized by following the Reclamation Plan (Attachment I). The specific design features to be followed include:

   - Reconstruct the disturbed area to original contours, particularly drainages.

- Topsoil will be salvaged, stockpiled, and replaced upon completion of construction.
    - Topsoil storage will be identified with appropriate signage.
    - Topsoil will not be stored beyond one growing season.
- Implement a Storm Water Pollution Prevention Plan (Attachment G) to prevent sediment transport from the construction area, manage waste, and prevent contamination.

There will be no slopes greater than 40 percent within the pipeline right-of-way. Elevations on BLM-administered land are less than 7,000 feet asl. Elevations on USFS-administered land are between 7,150 and 7,780 feet asl.

7. Water:

The pipeline will mainly be placed within the existing roadway fill, outside of jurisdictional channels; however, Section 404 permits will be obtained from the Army Corps if jurisdictional channels cannot be avoided. Coverage under the Utah Pollutant Discharge Elimination System (UPDES) permit UTRC00000 will be obtained for compliance with Section 402 of the Clean Water Act. Best management practices will be detailed in the SWPPP (Attachment G), SPRP (Attachment H), and Reclamation Plan (Attachment I).

8. Vegetation:

Vegetation will be removed from a portion of the right-of-way for construction purposes; however, vegetation is limited within the disturbed rights-of-way that contain the proposed pipeline right-of-way. Seeding will be applied as detailed in the Reclamation Plan (Attachment I).

9. Wildlife:

USFS sensitive species that could occur in the area include:

- Bald eagle (*Haliaeetus leucocephalus*): Eagles may use the area incidentally for scavenging.
- Flammulated owl (*Otus flammeolus*): Potentially suitable mature forest habitat does not occur within the project area, and is limited within the Rilda Canyon drainage.
- Northern goshawk (*Accipiter gentilis*): Potentially suitable mature forest habitat does not occur within the project area, and is limited within the Rilda Canyon drainage. This species is also a management indicator species (MIS) on the Manti-La Sal National Forest.
- Peregrine falcon (*Falco peregrinus anatum*): Potentially suitable cliff nesting habitat and foraging habitat occurs within the canyons.
- Spotted bat (*Euderma maculatum*): Potential cliff roosting habitat occurs within Rilda Canyon; foraging may occur throughout the project area.
- Three-toed woodpecker (*Picoides dorsalis*): Coniferous habitat above 8,000 feet in elevation does not occur within the project area.

- Townsend's big-eared bat (*Corynorhinus townsendii pallescens*): Potential cliff roosting habitat occurs within Rilda Canyon; foraging may occur throughout the project area.

The Manti-La Sal National Forest also considers golden eagle (*Aquila chrysaetos*) as a management indicator species (MIS); suitable cliff nesting habitat occurs within the canyons, and eagles may forage in the project area.

Raptors and migratory birds (including the USFS sensitive species listed above) are likely to occur within and near the project area. Direct loss of habitat is unlikely due to collocation of the proposed pipeline within existing disturbed rights-of-way. Birds in the area are likely habituated to human presence and noise associated with the roadways. Although construction is proposed in the latter part of breeding season, it is unlikely to cause undue stress on birds in the area because of the existing roadway use.

The project is within crucial winter mule deer (*Odocoileus hemionus*) habitat, crucial winter and summer elk (*Cervus elaphus*) habitat, and crucial yearlong and winter moose (*Alces alces*) habitat. Due to the existing roadway and other uses, animals in the area are likely habituated to human presence and noise. It is hoped that construction would be completed before December 1, prior to seasonal closure for these habitats. Mule deer and elk are listed as management indicator species (MIS) for the Manti-La Sal National Forest.

The project area is over 2 miles from mapped greater sage-grouse (*Centrocercus urophasianus*) general habitat. Timing stipulations would not apply.

10. <u>Threatened and endangered species:</u>

The IPaC system was accessed on 5-2-16 to identify listed species that may potentially occur within the project area. The following species were identified:

- Mexican spotted owl (*Strix occidentalis lucida*): The nearest critical habitat is over 40 miles to the east of the project area. Modelled potentially suitable habitat does occur within Huntington Canyon.
- Southwestern willow flycatcher (*Empidonax traillii extimus*) and yellow-billed cuckoo (*Coccyzus americanus*): Mature riparian vegetation is present along Huntington Creek; however, a dense understory suitable for nesting is not present. These species are unlikely to occur in the project area.
- Bonytail chub (*Gila elegans*), Colorado pikeminnow (*Ptychocheilus lucius*), humpback chub (*Gila cypha*), and razorback sucker (*Xyrauchen texanus*): Critical habitat for these species is over 50 miles downstream. Implementation of best management practices will reduce impacts to water quality; the project will have no impact on these species.
- Barneby reed-mustard (*Schoenocrambe barnebyi*): This species is mainly known to occur in Capitol Reef National Park; the project will not impact this species.

- Jones cycladenia (*Cycladenia humilis var. jonesii*): The project area does not include the known suitable habitat characteristics for this species.

There are no critical habitats within or near the project area.

11. Cultural resources:

    Impacts to cultural resources are not anticipated due to the collocation of the proposed pipeline within existing disturbed rights-of-way. If deemed necessary, Class III inventories will be completed as soon as possible, prior to construction. Impacts to eligible sites will be avoided where possible. If cultural resources cannot be avoided, mitigation will be applied. A discovery plan is included as Attachment J.

12. Visual resources:

    Where it crosses BLM-administered land, the project is within VRM Class II. SR-31 is part of the Huntington Canyon Scenic Byway. Visual impacts would occur due to the presence of heavy equipment directly adjacent to the highway during construction; these impacts would occur for up to 3 months. Disturbed ground would create a visual contrast after the project was completed, but would not contrast significantly within the existing disturbed road right-of-way. The contrast would be short-term (less than 5 years), and would also reduce as vegetation established on the reseeded areas.

13. Other projects:

    Installation of a buried fiber optic cable within the same corridor will be coordinated to reduce the area and cumulative time of project disturbance. No other projects are known at this time.

14. Recreation activities:

    Recreational users in the canyon will be temporarily impacted by visible construction adjacent to the roadway; however, it is anticipated that traffic flow will be maintained during construction, and delays will be limited. No other impacts to recreation are anticipated.

15. Wilderness:
    The nearest designated wilderness area is over 24 miles away. No lands designated as wilderness are within the project area. No BLM natural areas or other lands with wilderness characteristics are within the project area.

16. Land Use:
    The alignment crosses general big-game winter range (GWR), leasable minerals area (MMA), and range forage product (RNG) management areas on the Manti-La Sal National Forest.

    The BLM-administered land within the project area is classified as controlled surface use (CSU).

## 8. Stabilization and Rehabilitation

Stabilization and rehabilitation will be conducted according to the Green River District Reclamation Guidelines, as detailed in the Reclamation Plan (Attachment I).

### a. Soil replacement and stabilization

As outlined in the Guidelines, topsoil will be salvaged, stockpiled, and replaced after construction is complete. A Stormwater Pollution Prevention Plan (SWPPP; Attachment G) will be prepared prior to construction that will detail the stabilization and erosion control measures to be implemented.

### b. Disposal of vegetation removed during construction (i.e., trees, shrubs, etc.)

Vegetation removed for construction will either be disposed of off-site or used as mulch/stabilizer for the disturbed soil.

### c. Seeding specifications

Seeding will be completed per direction in the agency-approved Reclamation Plan (Attachment I) and as required by individual landowners.

### d. Fertilizer

Fertilizer will be applied as required by the individual landowners or agencies.

### e. Limiting access to the right-of-way

Limiting access to the right-of-way during construction for safety reasons will be the responsibility of the construction contractor. When construction is complete, the pipeline will be within the existing road rights-of-way; no limitation of access will be necessary.

### f. Will roads built during construction be reclaimed?

No roads will be constructed during this project.

## 9. Operation and Maintenance

### a. Will new or expanded access be needed for operation and maintenance?

No; existing adjacent roadways will provide access to the right-of-way.

### b. Will there be hydrostatic testing and subsequent release of water and what is the anticipated volume?

The pipeline will be tested for integrity when it is complete. The total volume of the pipeline will be approximately 70,000 gallons. Water used in testing will drain into the Huntington Power Plant settling pond at the lower end of the pipeline.

### c. Will removal and/or addition of pipe and/or pumps be required as part of the pipeline maintenance?

No. Routine maintenance will be restricted to periodic checking of pressure relief and air introduction valves. Emergency maintenance may require the temporary use of bypass sections of pipe to route the flow around maintenance areas.

### d. Will all maintenance activities be confined within the right-of-way?

Yes.

### e. Safety

Safety concerns are minimal with the proposed gravity flow water pipeline. Pipe wall thickness and the location of the shut-off valve were selected based on anticipated pressures.

### f. Will industrial wastes and toxic substances be generated or stored on right-of-way?

No.

### g. Inspection and maintenance schedules

Visual inspection of the finished pipeline will be conducted on a monthly basis from the existing roadways.

#### i. Will these be conducted on the ground and/or by aircraft?

Routine maintenance inspections will be conducted on the ground, using existing roadways.

#### ii. If by aircraft, will the aircraft require landing strips and/or heliports?

No.

### h. Work schedules

Work schedules during operation will consist of the monthly ground inspection.

### i. Fire control

Operation of the gravity flow water pipeline does not create the potential for fire.

### j. Contingency planning

No contingencies have been identified at this time.

## 10. Termination and Restoration

This pipeline, once constructed, is intended to be a permanent installation.

### a. Removal of structures

Once construction is complete, the pipeline and associated structures (valves, pressure reliefs, air-vac structures) will be left in place permanently. PacifiCorp will operate and maintain the pipeline regardless of power plant operations.

### b. Will pipe be removed or cleaned and left in ground?

Pipe will be left in the ground.

### c. Obliteration of roads

No roads will be constructed during this installation. All construction activities will take place alongside and largely within the rights-of-way of existing roads. No obliteration of roads will be necessary.

### d. Stabilization and revegetation of disturbed areas

Disturbed areas will be reclaimed according to agency-approved reclamation plans at the time of termination.

## Attachment A. Overview Map

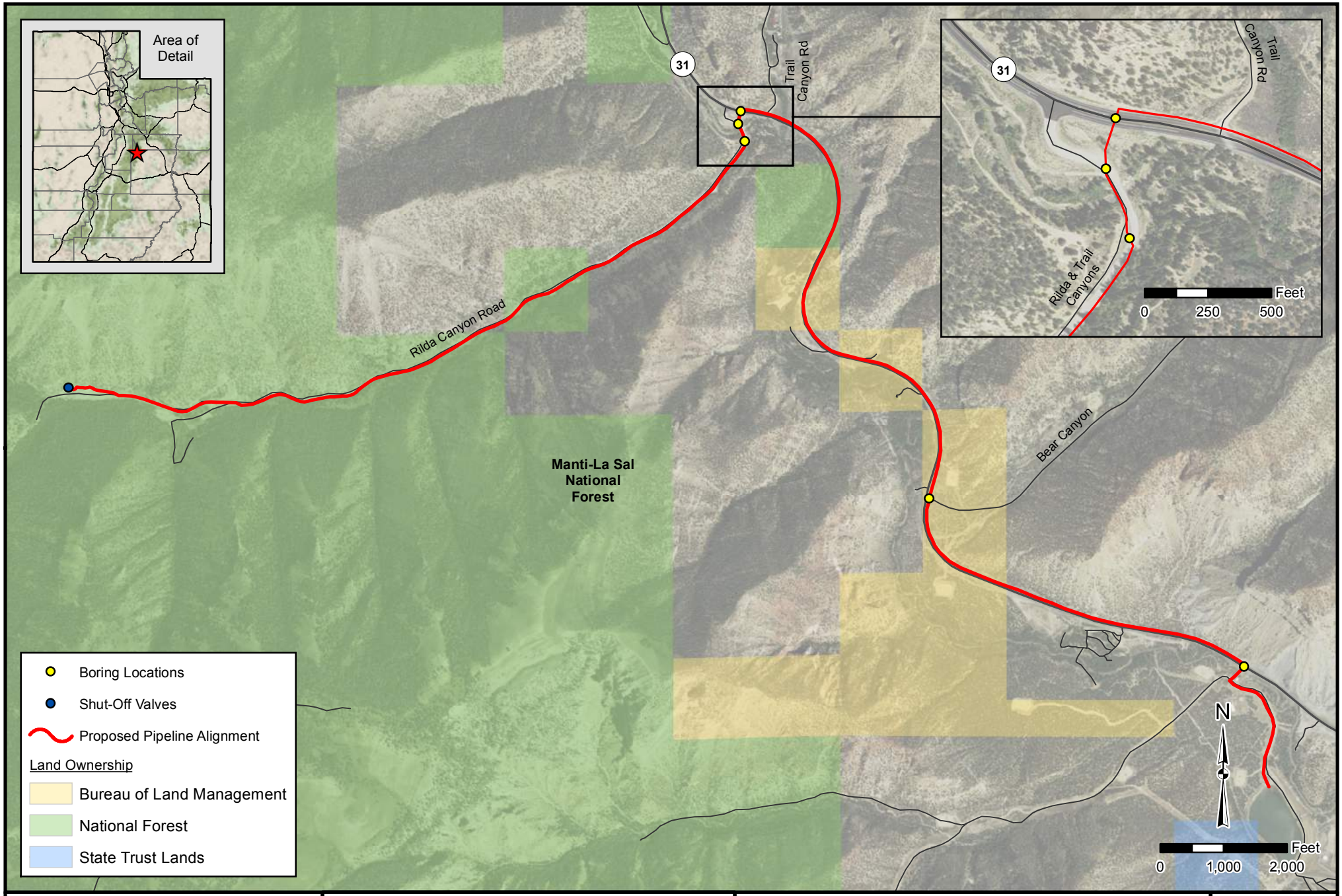


GIS

Jones & DeMille Engineering

*- infrastructure professionals -*

800.748.5275 www.jonesanddemille.com

**PacifiCorp**

***Deer Creek Mine - Proposed Live Water Relief Pipeline Overview***

Map Name: H:\JD\Proj\1506-121\Design\GIS\Maps\EA\1_Overview.mxd

Project Number: 1506-121 | Drawn by: JWW 09-16 | Last Edit: 09/19/2016

**EMERY COUNTY**

SCALE: 1 " = 2,000 '

**1**

# Attachment B. Legal Description Tables

**Table B. 1. Legal Description in Pipeline Order, from Start to End**

| Sections within T 16 S, R 7 E | | | |
|---|---|---|---|
| **Owner** | **Section #** | **Description** | **Parcel Acres** |
| USFS | 29 | SE 1/4, SW 1/4, NE 1/4 | 10 |
| USFS | 29 | S 1/2, SE 1/4, NE 1/4 | 20 |
| USFS | 28 | S 1/2, S 1/2, NW 1/4 | 40 |
| USFS | 28 | N 1/2, SW 1/2, NE 1/4 | 10 |
| USFS | 28 | S 1/2, NE 1/4, SW 1/4, NE 1/4 | 5 |
| USFS | 28 | N 1/2, SE 1/4, NE 1/4 | 20 |
| PacifiCorp | 28 | SE 1/4, NE 1/4, NE 1/4 | 10 |
| USFS | 27 | S 1/2, NW 1/4, NW 1/4 | 20 |
| USFS | 27 | NE 1/4, NW 1/4, NW 1/4 | 10 |
| Andalex | 27 | N 1/2, NE 1/4, NW 1/4 | 20 |
| PacifiCorp | 22 | S 1/2, SE 1/4, SW 1/4 | 20 |
| Andalex | 22 | SW 1/4, SW 1/4, SE 1/4 | 10 |
| Andalex | 22 | N 1/2, SW 1/4, SE 1/4 | 20 |
| COP | 22 | E 1/2, NE 1/4, SE 1/4 | 20 |
| COP | 22 | S1/2, NW 1/4, NE 1/4, SE 1/4, | 5 |
| COP | 22 | N 1/2, SW 1/4, NE 1/4, SE 1/4 | 5 |
| COP | 22 | SE 1/4, NE 1/4, SE 1/4 | 10 |
| USFS | 22 | E 1/2, NE 1/4, SE 1/4, SE 1/4 | 5 |
| COP | 23 | W 1/2, W 1/2, W 1/2, SW 1/4, SW 1/4 | 5 |
| USFS | 22 | E 1/2, SE 1/4, SE 1/4, SE 1/4 | 5 |
| BLM | 27 | E 1/2, NE 1/4, NE 1/4 | 20 |
| Andalex | 27 | E 1/2, SE 1/4, NE 1/4 | 20 |
| BLM | 26 | N 1/2, SW 1/4, NW 1/4 | 20 |
| BLM | 26 | SE 1/4, SW 1/4, NW 1/4 | 10 |
| COP | 26 | W 1/2, SW 1/4, SE 1/4, NW 1/4 | 5 |
| BLM | 26 | W 1/2, W 1/2, NE 1/4, SW 1/4 | 10 |
| BLM | 26 | W 1/2, SE 1/4, SW 1/4 | 20 |
| BLM | 26 | S 1/2, SE 1/4, SE 1/4, SW 1/4 | 5 |
| BLM | 35 | NE 1/4, NE 1/4, NW 1/4 | 10 |
| Emery Co. | 35 | N 1/2, NW 1/4, NE 1/4 | 20 |
| Emery Co. | 35 | SE 1/4, NW 1/4, NE 1/4 | 10 |
| Emery Co. | 35 | S 1/2, NE 1/4, NE 1/4 | 20 |
| UDOT | 36 | S 1/2, NW 1/4, NW 1/4 | 20 |
| PacifiCorp | 36 | NE 1/4, SW 1/4, NW 1/4, | 10 |

| | | | |
|---|---|---|---|
| PacifiCorp | 36 | W 1/2, NW 1/4, SE 1/4, NW 1/4 | 5 |
| PacifiCorp | 36 | W 1/2, SW 1/4, SE 1/4, NW 1/4 | 5 |
| PacifiCorp | 36 | W 1/2, W 1/2, NE 1/4, SW 1/4 | 10 |

**Table B. 2. Legal Description in Section Order**

| Sections within T 16 S, R 7 E | | | |
|---|---|---|---|
| **Owner** | **Section #** | **Description** | **Parcel Acres** |
| PacifiCorp | 22 | S 1/2, SE 1/4, SW 1/4 | 20 |
| Andalex | 22 | SW 1/4, SW 1/4, SE 1/4 | 10 |
| Andalex | 22 | N 1/2, SW 1/4, SE 1/4 | 20 |
| COP | 22 | E 1/2, NE 1/4, SE 1/4 | 20 |
| COP | 22 | S1/2, NW 1/4, NE 1/4, SE 1/4, | 5 |
| COP | 22 | N 1/2, SW 1/4, NE 1/4, SE 1/4 | 5 |
| COP | 22 | SE 1/4, NE 1/4, SE 1/4 | 10 |
| USFS | 22 | E 1/2, NE 1/4, SE 1/4, SE 1/4 | 5 |
| USFS | 22 | E 1/2, SE 1/4, SE 1/4, SE 1/4 | 5 |
| COP | 23 | W 1/2, W 1/2, W 1/2, SW 1/4, SW 1/4 | 5 |
| BLM | 26 | N 1/2, SW 1/4, NW 1/4 | 20 |
| BLM | 26 | SE 1/4, SW 1/4, NW 1/4 | 10 |
| COP | 26 | W 1/2, SW 1/4, SE 1/4, NW 1/4 | 5 |
| BLM | 26 | W 1/2, W 1/2, NE 1/4, SW 1/4 | 10 |
| BLM | 26 | W 1/2, SE 1/4, SW 1/4 | 20 |
| BLM | 26 | S 1/2, SE 1/4, SE 1/4, SW 1/4 | 5 |
| USFS | 27 | S 1/2, NW 1/4, NW 1/4 | 20 |
| USFS | 27 | NE 1/4, NW 1/4, NW 1/4 | 10 |
| Andalex | 27 | N 1/2, NE 1/4, NW 1/4 | 20 |
| BLM | 27 | E 1/2, NE 1/4, NE 1/4 | 20 |
| Andalex | 27 | E 1/2, SE 1/4, NE 1/4 | 20 |
| USFS | 28 | S 1/2, S 1/2, NW 1/4 | 40 |
| USFS | 28 | N 1/2, SW 1/2, NE 1/4 | 10 |
| USFS | 28 | S 1/2, NE 1/4, SW 1/4, NE 1/4 | 5 |
| USFS | 28 | N 1/2, SE 1/4, NE 1/4 | 20 |
| PacifiCorp | 28 | SE 1/4, NE 1/4, NE 1/4 | 10 |
| USFS | 29 | SE 1/4, SW 1/4, NE 1/4 | 10 |
| USFS | 29 | S 1/2, SE 1/4, NE 1/4 | 20 |
| BLM | 35 | NE 1/4, NE 1/4, NW 1/4 | 10 |
| Emery Co. | 35 | N 1/2, NW 1/4, NE 1/4 | 20 |
| Emery Co. | 35 | SE 1/4, NW 1/4, NE 1/4 | 10 |
| Emery Co. | 35 | S 1/2, NE 1/4, NE 1/4 | 20 |
| UDOT | 36 | S 1/2, NW 1/4, NW 1/4 | 20 |

| | | | |
|---|---|---|---|
| PacifiCorp | 36 | NE 1/4, SW 1/4, NW 1/4, | 10 |
| PacifiCorp | 36 | W 1/2, NW 1/4, SE 1/4, NW 1/4 | 5 |
| PacifiCorp | 36 | W 1/2, SW 1/4, SE 1/4, NW 1/4 | 5 |
| PacifiCorp | 36 | W 1/2, W 1/2, NE 1/4, SW 1/4 | 10 |

**Table B. 3. Legal Description in Alphabetic Order of Landownership**

| Sections within T 16 S, R 7 E | | | |
|---|---|---|---|
| **Owner** | **Section #** | **Description** | **Parcel Acres** |
| Andalex | 22 | SW 1/4, SW 1/4, SE 1/4 | 10 |
| Andalex | 22 | N 1/2, SW 1/4, SE 1/4 | 20 |
| Andalex | 27 | N 1/2, NE 1/4, NW 1/4 | 20 |
| Andalex | 27 | E 1/2, SE 1/4, NE 1/4 | 20 |
| BLM | 26 | N 1/2, SW 1/4, NW 1/4 | 20 |
| BLM | 26 | SE 1/4, SW 1/4, NW 1/4 | 10 |
| BLM | 26 | W 1/2, W 1/2, NE 1/4, SW 1/4 | 10 |
| BLM | 26 | W 1/2, SE 1/4, SW 1/4 | 20 |
| BLM | 26 | S 1/2, SE 1/4, SE 1/4, SW 1/4 | 5 |
| BLM | 27 | E 1/2, NE 1/4, NE 1/4 | 20 |
| BLM | 35 | NE 1/4, NE 1/4, NW 1/4 | 10 |
| COP | 22 | E 1/2, NE 1/4, SE 1/4 | 20 |
| COP | 22 | S1/2, NW 1/4, NE 1/4, SE 1/4, | 5 |
| COP | 22 | N 1/2, SW 1/4, NE 1/4, SE 1/4 | 5 |
| COP | 22 | SE 1/4, NE 1/4, SE 1/4 | 10 |
| COP | 23 | W 1/2, W 1/2, W 1/2, SW 1/4, SW 1/4 | 5 |
| COP | 26 | W 1/2, SW 1/4, SE 1/4, NW 1/4 | 5 |
| Emery Co. | 35 | N 1/2, NW 1/4, NE 1/4 | 20 |
| Emery Co. | 35 | SE 1/4, NW 1/4, NE 1/4 | 10 |
| Emery Co. | 35 | S 1/2, NE 1/4, NE 1/4 | 20 |
| PacifiCorp | 22 | S 1/2, SE 1/4, SW 1/4 | 20 |
| PacifiCorp | 28 | SE 1/4, NE 1/4, NE 1/4 | 10 |
| PacifiCorp | 36 | NE 1/4, SW 1/4, NW 1/4, | 10 |
| PacifiCorp | 36 | W 1/2, NW 1/4, SE 1/4, NW 1/4 | 5 |
| PacifiCorp | 36 | W 1/2, SW 1/4, SE 1/4, NW 1/4 | 5 |
| PacifiCorp | 36 | W 1/2, W 1/2, NE 1/4, SW 1/4 | 10 |
| USFS | 22 | E 1/2, NE 1/4, SE 1/4, SE 1/4 | 5 |
| USFS | 22 | E 1/2, SE 1/4, SE 1/4, SE 1/4 | 5 |
| USFS | 27 | S 1/2, NW 1/4, NW 1/4 | 20 |
| USFS | 27 | NE 1/4, NW 1/4, NW 1/4 | 10 |
| USFS | 28 | S 1/2, S 1/2, NW 1/4 | 40 |
| USFS | 28 | N 1/2, SW 1/2, NE 1/4 | 10 |

| | | | |
|---|---|---|---|
| USFS | 28 | S 1/2, NE 1/4, SW 1/4, NE 1/4 | 5 |
| USFS | 28 | N 1/2, SE 1/4, NE 1/4 | 20 |
| USFS | 29 | SE 1/4, SW 1/4, NE 1/4 | 10 |
| USFS | 29 | S 1/2, SE 1/4, NE 1/4 | 20 |
| UDOT | 36 | S 1/2, NW 1/4, NW 1/4 | 20 |

## Attachment C. Landownership Map

NEWUA PIPELINE
XTO PIPELINE
PROPOSED DEER CREEK PIPELINE
RIGHT-OF-WAY
OWNERSHIP BOUNDARY
SECTION LINE

PACIFICORP
A BERKSHIRE HATHAWAY ENERGY COMPANY

DEER CREEK MINE
1ST RIGHT/RILDA CANYON
PROPOSED PIPELINE TO HUNTINGTON PLANT

DRAWN BY: K. LARSEN
SCALE: 1"=600'
DRAWING #:
DATE: MAY 2, 2016
SHEET 1 OF 1
REV.

| Land Owner | Linear Distance | Estimated Disturbance at 12' Wide |
|---|---|---|
| USFS | 9674' | 2.65 Acres |
| BLM | 6464' | 1.78 Acres |
| C O P Coal Development Company | 3162' | 0.87 Acres |
| Andalex Resources, Inc. | 2662' | 0.73 Acres |
| Emery County | 2750' | 0.76 Acres |
| PacifiCorp | 3778' | 1.03 Acres |
| Zions First National Bank Trustee | 922' | 0.25 Acres |
| Total | 29,412' | 8.07 Acres |

| Right-of-Way | Linear Distance | Estimated Disturbance at 12' Wide |
|---|---|---|
| State Highway 31 | 14,537' | 4.00 Acres |
| Emery County Road 306 | 12,553' | 3.44 Acres |

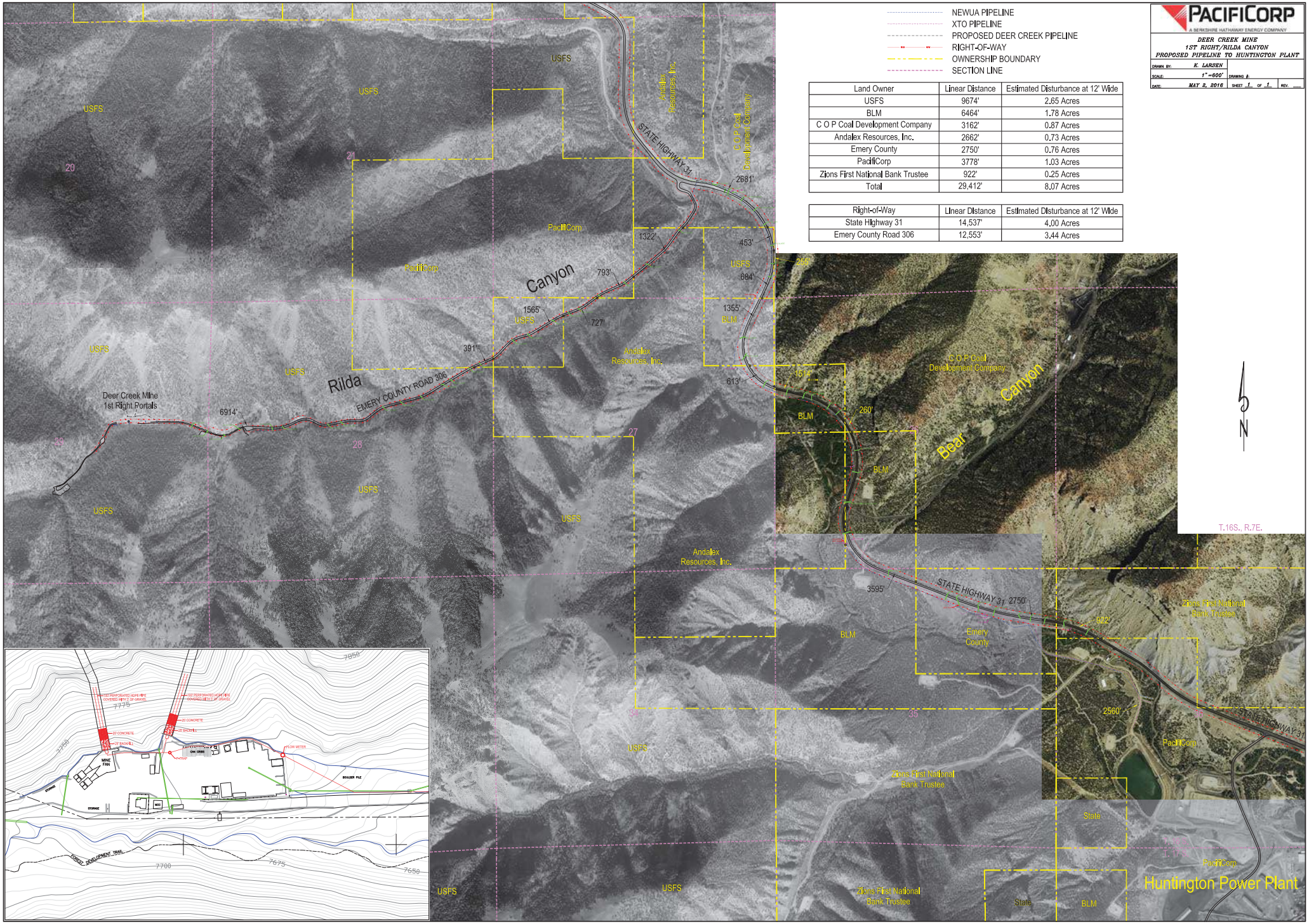

## Attachment D. Bore and Stream Crossings Figures

Figure 1. Boring and Bridge Crossing Location Details at the Mouth of Rilda Canyon

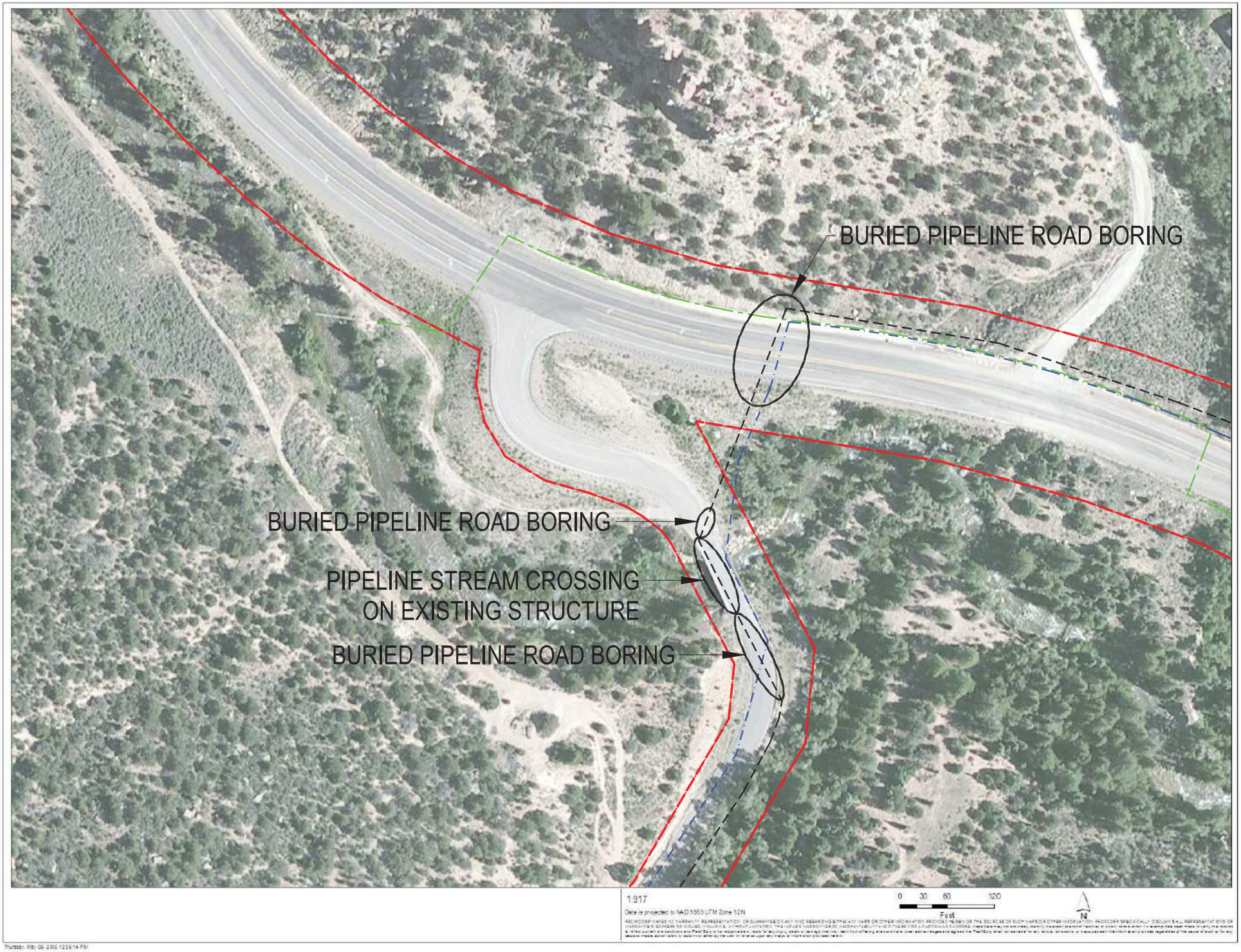

Figure 2. Boring and Diversion Structure Crossing Location Details Near Huntington Power Plant

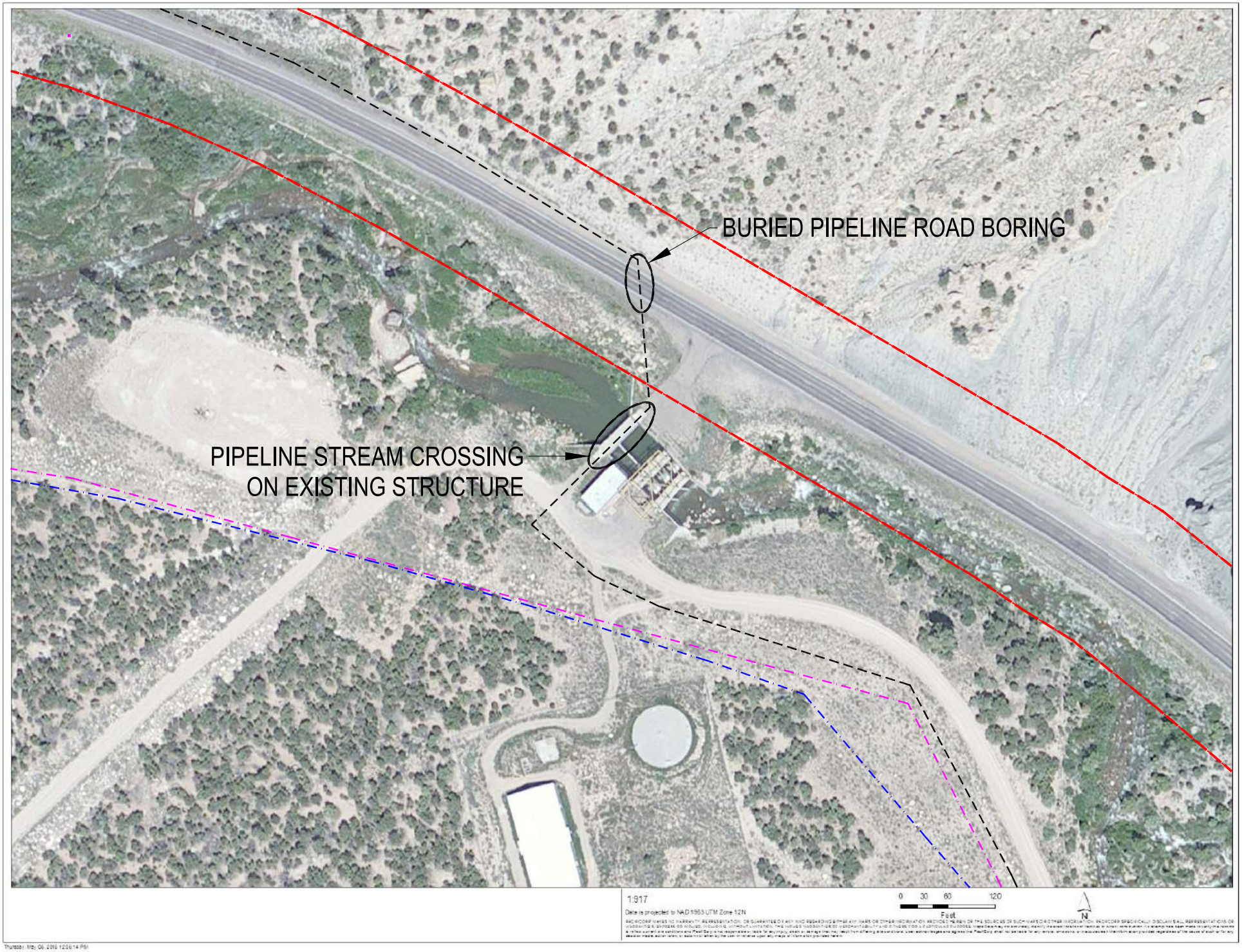

Figure 3. Boring Location Details at Bear Canyon Road

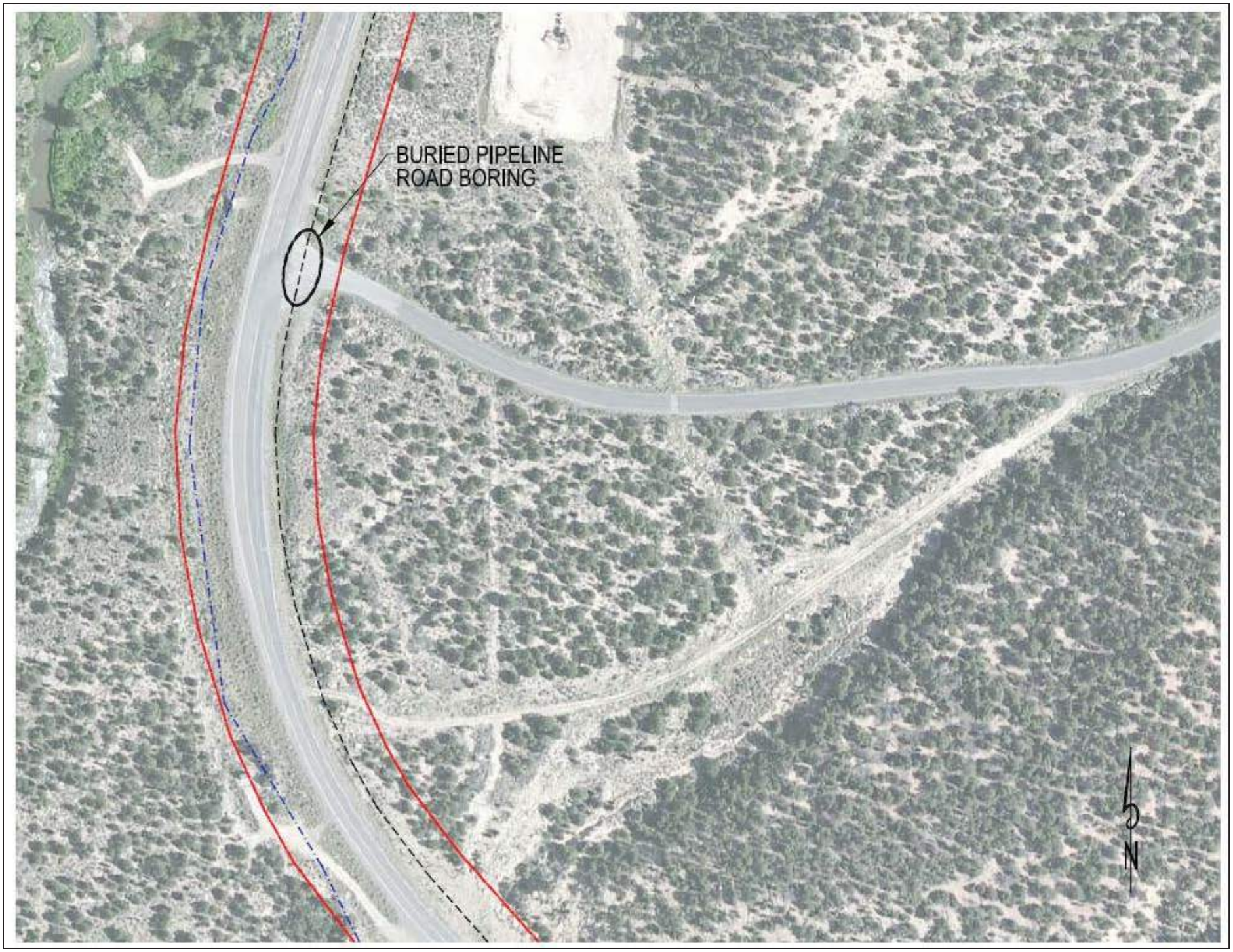

## Attachment E. Water Quality Sampling Results

CHEMTECH-FORD
LABORATORIES

7/6/2016

# Work Order: 16F0973
# Project: Deer Creek Mine 11th-17th West

**Pacificorp - Huntington Plant**
**Attn: Chuck Sembroski**
**P.O. Box 680**
**Huntington, UT 84528**

**Client Service Contact: 801.262.7299**

The analyses presented on this report were performed in accordance with the National Environmental Laboratory Accreditation Program (NELAP) unless noted in the comments, flags, or case narrative. If the report is to be used for regulatory compliance, it should be presented in its entirety, and not be altered.

NELAP ACCREDITED TNI LABORATORY

Approved By:

Reed Hendricks, Senior Project Manager

**Chemtech-Ford Laboratories**
Serving the Intermountain West Since 1953

9632 South 500 West
Sandy, UT 84070
O:(801) 262-7299 F: (866) 792-0093
*www.ChemtechFord.com*

# Certificate of Analysis

**Pacificorp - Huntington Plant**
**Chuck Sembroski**
**P.O. Box 680**
**Huntington, UT 84528**

PO#: **3000116067**
Receipt: **6/17/16 14:52 @ 10.60** °C
Date Reported: 7/6/2016
Project Name: **Deer Creek Mine 11th-17th West**

Sample ID: **Deer Creek Mine 11th-17th West**
Matrix: **Water**
Date Sampled: **6/17/16 10:21**
Sampled By: **Chuck Sembroski**
Lab ID: **16F0973-01**

| Parameter | Result | Units | Minimum Reporting Limit | Method | Preparation Date/Time | Analysis Date/Time | Flag(s) |
|---|---|---|---|---|---|---|---|
| **Pesticides** | | | | | | | |
| 4,4'-DDD | ND | ug/L | 0.2 | EPA 608 | 6/21/16 | 6/28/16 | |
| 4,4'-DDE | ND | ug/L | 0.1 | EPA 608 | 6/21/16 | 6/28/16 | |
| 4,4'-DDT | ND | ug/L | 0.2 | EPA 608 | 6/21/16 | 6/28/16 | |
| alpha-Chlordane | ND | ug/L | 0.1 | EPA 608 | 6/21/16 | 6/28/16 | |
| Aldrin | ND | ug/L | 0.2 | EPA 608 | 6/21/16 | 6/28/16 | |
| alpha-BHC | ND | ug/L | 0.05 | EPA 608 | 6/21/16 | 6/28/16 | |
| beta-BHC | ND | ug/L | 0.1 | EPA 608 | 6/21/16 | 6/28/16 | |
| delta-BHC | ND | ug/L | 0.1 | EPA 608 | 6/21/16 | 6/28/16 | |
| Dieldrin | ND | ug/L | 0.1 | EPA 608 | 6/21/16 | 6/28/16 | |
| Endosulfan I | ND | ug/L | 0.1 | EPA 608 | 6/21/16 | 6/28/16 | |
| Endosulfan II | ND | ug/L | 0.2 | EPA 608 | 6/21/16 | 6/28/16 | |
| Endosulfan sulfate | ND | ug/L | 0.2 | EPA 608 | 6/21/16 | 6/28/16 | |
| Endrin | ND | ug/L | 0.1 | EPA 608 | 6/21/16 | 6/28/16 | |
| Endrin aldehyde | ND | ug/L | 0.2 | EPA 608 | 6/21/16 | 6/28/16 | |
| gamma-Chlordane | ND | ug/L | 0.1 | EPA 608 | 6/21/16 | 6/28/16 | |
| Heptachlor | ND | ug/L | 0.1 | EPA 608 | 6/21/16 | 6/28/16 | |
| Heptachlor epoxide | ND | ug/L | 0.1 | EPA 608 | 6/21/16 | 6/28/16 | |
| Lindane | ND | ug/L | 0.05 | EPA 608 | 6/21/16 | 6/28/16 | |
| PCB-1016 | ND | ug/L | 2.0 | EPA 608 | 6/21/16 | 6/28/16 | |
| PCB-1221 | ND | ug/L | 2.0 | EPA 608 | 6/21/16 | 6/28/16 | |
| PCB-1232 | ND | ug/L | 2.0 | EPA 608 | 6/21/16 | 6/28/16 | |
| PCB-1242 | ND | ug/L | 2.0 | EPA 608 | 6/21/16 | 6/28/16 | |
| PCB-1248 | ND | ug/L | 2.0 | EPA 608 | 6/21/16 | 6/28/16 | |
| PCB-1254 | ND | ug/L | 2.0 | EPA 608 | 6/21/16 | 6/28/16 | |
| PCB-1260 | ND | ug/L | 2.0 | EPA 608 | 6/21/16 | 6/28/16 | |
| Toxaphene | ND | ug/L | 2.0 | EPA 608 | 6/21/16 | 6/28/16 | |
| **Semi-Volatile Compounds** | | | | | | | |
| 1,2,4-Trichlorobenzene | ND | ug/L | 5 | EPA 625 | 6/21/16 | 6/27/16 | |
| 1,2-Dichlorobenzene | ND | ug/L | 5 | EPA 625 | 6/21/16 | 6/27/16 | |
| 1,3-Dichlorobenzene | ND | ug/L | 5 | EPA 625 | 6/21/16 | 6/27/16 | |
| 1,4-Dichlorobenzene | ND | ug/L | 5 | EPA 625 | 6/21/16 | 6/27/16 | |
| 2,4,6-Trichlorophenol | ND | ug/L | 5 | EPA 625 | 6/21/16 | 6/27/16 | |
| 2,4-Dichlorophenol | ND | ug/L | 5 | EPA 625 | 6/21/16 | 6/27/16 | |
| 2,4-Dimethylphenol | ND | ug/L | 5 | EPA 625 | 6/21/16 | 6/27/16 | |
| 2,4-Dinitrophenol | ND | ug/L | 10 | EPA 625 | 6/21/16 | 6/27/16 | |
| 2,4-Dinitrotoluene | ND | ug/L | 5 | EPA 625 | 6/21/16 | 6/27/16 | |
| 2,6-Dinitrotoluene | ND | ug/L | 5 | EPA 625 | 6/21/16 | 6/27/16 | |
| 2-Chloronaphthalene | ND | ug/L | 5 | EPA 625 | 6/21/16 | 6/27/16 | |
| 2-Chlorophenol | ND | ug/L | 5 | EPA 625 | 6/21/16 | 6/27/16 | |
| 2-Nitrophenol | ND | ug/L | 10 | EPA 625 | 6/21/16 | 6/27/16 | |
| 3,3´-Dichlorobenzidine | ND | ug/L | 10 | EPA 625 | 6/21/16 | 6/27/16 | |
| 4,6-Dinitro-2-methylphenol | ND | ug/L | 10 | EPA 625 | 6/21/16 | 6/27/16 | |
| 4-Bromophenyl phenyl ether | ND | ug/L | 5 | EPA 625 | 6/21/16 | 6/27/16 | |

**Chemtech-Ford Laboratories**
Serving the Intermountain West Since 1953

9632 South 500 West
Sandy, UT 84070
O:(801) 262-7299 F: (866) 792-0093
*www.ChemtechFord.com*

# Certificate of Analysis

**Pacificorp - Huntington Plant**
**Chuck Sembroski**
**P.O. Box 680**
**Huntington, UT 84528**

PO#: **3000116067**
Receipt: **6/17/16 14:52 @ 10.60** °C
Date Reported: 7/6/2016
Project Name: **Deer Creek Mine 11th-17th West**

Sample ID: **Deer Creek Mine 11th-17th West (cont.)**
Matrix: **Water**
Lab ID: **16F0973-01**
Date Sampled: **6/17/16 10:21**
Sampled By: **Chuck Sembroski**

| Parameter | Result | Units | Minimum Reporting Limit | Method | Preparation Date/Time | Analysis Date/Time | Flag(s) |
|---|---|---|---|---|---|---|---|
| **Semi-Volatile Compounds (cont.)** | | | | | | | |
| 4-Chloro-3-methylphenol | ND | ug/L | 5 | EPA 625 | 6/21/16 | 6/27/16 | |
| 4-Chlorophenyl Phenyl Ether | ND | ug/L | 5 | EPA 625 | 6/21/16 | 6/27/16 | |
| 4-Nitrophenol | ND | ug/L | 10 | EPA 625 | 6/21/16 | 6/27/16 | |
| Acenaphthene | ND | ug/L | 5 | EPA 625 | 6/21/16 | 6/27/16 | |
| Acenaphthylene | ND | ug/L | 5 | EPA 625 | 6/21/16 | 6/27/16 | |
| Anthracene | ND | ug/L | 5 | EPA 625 | 6/21/16 | 6/27/16 | |
| Azobenzene | ND | ug/L | 5 | EPA 625 | 6/21/16 | 6/27/16 | |
| Benzidine | ND | ug/L | 10 | EPA 625 | 6/21/16 | 6/27/16 | |
| Benzo (a) anthracene | ND | ug/L | 5 | EPA 625 | 6/21/16 | 6/27/16 | |
| Benzo (a) pyrene | ND | ug/L | 5 | EPA 625 | 6/21/16 | 6/27/16 | |
| Benzo (b) fluoranthene | ND | ug/L | 5 | EPA 625 | 6/21/16 | 6/27/16 | |
| Benzo (g,h,i) perylene | ND | ug/L | 5 | EPA 625 | 6/21/16 | 6/27/16 | |
| Benzo (k) fluoranthene | ND | ug/L | 5 | EPA 625 | 6/21/16 | 6/27/16 | |
| Bis (2-chloroethoxy) Methane | ND | ug/L | 5 | EPA 625 | 6/21/16 | 6/27/16 | |
| Bis (2-chloroethyl) Ether | ND | ug/L | 5 | EPA 625 | 6/21/16 | 6/27/16 | |
| Bis (2-chloroisopropyl) Ether | ND | ug/L | 5 | EPA 625 | 6/21/16 | 6/27/16 | |
| Bis (2-ethylhexyl) Phthalate | ND | ug/L | 10 | EPA 625 | 6/21/16 | 6/27/16 | |
| Butylbenzylphthalate | ND | ug/L | 5 | EPA 625 | 6/21/16 | 6/27/16 | |
| Chrysene | ND | ug/L | 5 | EPA 625 | 6/21/16 | 6/27/16 | |
| Dibenzo (a,h) anthracene | ND | ug/L | 5 | EPA 625 | 6/21/16 | 6/27/16 | |
| Diethylphthalate | ND | ug/L | 5 | EPA 625 | 6/21/16 | 6/27/16 | |
| Dimethyl phthalate | ND | ug/L | 5 | EPA 625 | 6/21/16 | 6/27/16 | |
| Di-n-butylphthalate | ND | ug/L | 5 | EPA 625 | 6/21/16 | 6/27/16 | |
| Di-n-Octylphthalate | ND | ug/L | 5 | EPA 625 | 6/21/16 | 6/27/16 | |
| Fluoranthene | ND | ug/L | 5 | EPA 625 | 6/21/16 | 6/27/16 | |
| Fluorene | ND | ug/L | 5 | EPA 625 | 6/21/16 | 6/27/16 | |
| Hexachlorobenzene | ND | ug/L | 5 | EPA 625 | 6/21/16 | 6/27/16 | |
| Hexachlorobutadiene | ND | ug/L | 5 | EPA 625 | 6/21/16 | 6/27/16 | |
| Hexachlorocyclopentadiene | ND | ug/L | 10 | EPA 625 | 6/21/16 | 6/27/16 | |
| Hexachloroethane | ND | ug/L | 5 | EPA 625 | 6/21/16 | 6/27/16 | |
| Indeno (1,2,3-cd) pyrene | ND | ug/L | 5 | EPA 625 | 6/21/16 | 6/27/16 | |
| Isophorone | ND | ug/L | 5 | EPA 625 | 6/21/16 | 6/27/16 | |
| Naphthalene | ND | ug/L | 5 | EPA 625 | 6/21/16 | 6/27/16 | |
| Nitrobenzene | ND | ug/L | 5 | EPA 625 | 6/21/16 | 6/27/16 | |
| N-Nitrosodimethylamine | ND | ug/L | 10 | EPA 625 | 6/21/16 | 6/27/16 | |
| N-Nitrosodi-n-propylamine | ND | ug/L | 5 | EPA 625 | 6/21/16 | 6/27/16 | |
| N-Nitrosodiphenylamine | ND | ug/L | 5 | EPA 625 | 6/21/16 | 6/27/16 | |
| Pentachlorophenol | ND | ug/L | 5 | EPA 625 | 6/21/16 | 6/27/16 | |
| Phenanthrene | ND | ug/L | 5 | EPA 625 | 6/21/16 | 6/27/16 | |
| Phenol | ND | ug/L | 5 | EPA 625 | 6/21/16 | 6/27/16 | |
| Pyrene | ND | ug/L | 5 | EPA 625 | 6/21/16 | 6/27/16 | |
| **Volatile Organic Compounds** | | | | | | | |
| 1,1,1,2-Tetrachloroethane | ND | ug/L | 5 | EPA 624 | 6/20/16 | 6/20/16 | |

**Chemtech-Ford Laboratories**
Serving the Intermountain West Since 1953

9632 South 500 West
Sandy, UT 84070
O:(801) 262-7299 F: (866) 792-0093
*www.ChemtechFord.com*

# Certificate of Analysis

**Pacificorp - Huntington Plant**
**Chuck Sembroski**
**P.O. Box 680**
**Huntington, UT 84528**

PO#: **3000116067**
Receipt: **6/17/16 14:52 @ 10.60** °C
Date Reported: 7/6/2016
Project Name: **Deer Creek Mine 11th-17th West**

Sample ID: **Deer Creek Mine 11th-17th West (cont.)**
Matrix: **Water**
Lab ID: **16F0973-01**
Date Sampled: **6/17/16 10:21**
Sampled By: **Chuck Sembroski**

| Parameter | Result | Units | Minimum Reporting Limit | Method | Preparation Date/Time | Analysis Date/Time | Flag(s) |
|---|---|---|---|---|---|---|---|
| **Volatile Organic Compounds (cont.)** | | | | | | | |
| 1,1,1-Trichloroethane | ND | ug/L | 5 | EPA 624 | 6/20/16 | 6/20/16 | |
| 1,1,2-Trichloroethane | ND | ug/L | 5 | EPA 624 | 6/20/16 | 6/20/16 | |
| 1,1-Dichloroethane | ND | ug/L | 5 | EPA 624 | 6/20/16 | 6/20/16 | |
| 1,1-Dichloroethene | ND | ug/L | 5 | EPA 624 | 6/20/16 | 6/20/16 | |
| 1,2-Dichlorobenzene | ND | ug/L | 5 | EPA 624 | 6/20/16 | 6/20/16 | |
| 1,2-Dichloroethane | ND | ug/L | 5 | EPA 624 | 6/20/16 | 6/20/16 | |
| 1,2-Dichloropropane | ND | ug/L | 5 | EPA 624 | 6/20/16 | 6/20/16 | |
| 1,3-Dichlorobenzene | ND | ug/L | 5 | EPA 624 | 6/20/16 | 6/20/16 | |
| 1,4-Dichlorobenzene | ND | ug/L | 5 | EPA 624 | 6/20/16 | 6/20/16 | |
| 2-Chloroethyl vinyl ether | ND | ug/L | 5 | EPA 624 | 6/20/16 | 6/20/16 | |
| Acrolein | ND | ug/L | 100 | EPA 624 | 6/20/16 | 6/20/16 | |
| Acrylonitrile | ND | ug/L | 50 | EPA 624 | 6/20/16 | 6/20/16 | |
| Benzene | ND | ug/L | 5 | EPA 624 | 6/20/16 | 6/20/16 | |
| Bromodichloromethane | ND | ug/L | 5 | EPA 624 | 6/20/16 | 6/20/16 | |
| Bromoform | ND | ug/L | 5 | EPA 624 | 6/20/16 | 6/20/16 | |
| Bromomethane | ND | ug/L | 5 | EPA 624 | 6/20/16 | 6/20/16 | |
| Carbon Tetrachloride | ND | ug/L | 5 | EPA 624 | 6/20/16 | 6/20/16 | |
| Chlorobenzene | ND | ug/L | 5 | EPA 624 | 6/20/16 | 6/20/16 | |
| Chloroethane | ND | ug/L | 5 | EPA 624 | 6/20/16 | 6/20/16 | |
| Chloroform | ND | ug/L | 5 | EPA 624 | 6/20/16 | 6/20/16 | |
| Chloromethane | ND | ug/L | 5 | EPA 624 | 6/20/16 | 6/20/16 | |
| cis-1,3-Dichloropropene | ND | ug/L | 5 | EPA 624 | 6/20/16 | 6/20/16 | |
| Dibromochloromethane | ND | ug/L | 5 | EPA 624 | 6/20/16 | 6/20/16 | |
| Ethylbenzene | ND | ug/L | 5 | EPA 624 | 6/20/16 | 6/20/16 | |
| Methylene Chloride | ND | ug/L | 5 | EPA 624 | 6/20/16 | 6/20/16 | |
| Tetrachloroethene | ND | ug/L | 5 | EPA 624 | 6/20/16 | 6/20/16 | |
| Toluene | ND | ug/L | 5 | EPA 624 | 6/20/16 | 6/20/16 | |
| trans-1,2-Dichloroethene | ND | ug/L | 5 | EPA 624 | 6/20/16 | 6/20/16 | |
| trans-1,3-Dichloropropene | ND | ug/L | 5 | EPA 624 | 6/20/16 | 6/20/16 | |
| Trichloroethene | ND | ug/L | 5 | EPA 624 | 6/20/16 | 6/20/16 | |
| Vinyl Chloride | ND | ug/L | 5 | EPA 624 | 6/20/16 | 6/20/16 | |

## Certificate of Analysis

**Pacificorp - Huntington Plant**
**Chuck Sembroski**
**P.O. Box 680**
**Huntington, UT 84528**

PO#: **3000116067**
Receipt: **6/17/16 14:52 @ 10.60** °C
Date Reported: 7/6/2016
Project Name: **Deer Creek Mine 11th-17th West**

# Report Footnotes

**Abbreviations**

ND = Not detected at the corresponding Minimum Reporting Limit (MRL).
1 mg/L = one milligram per liter or 1 mg/kg = one milligram per kilogram = 1 part per million.
1 ug/L = one microgram per liter or 1 ug/kg = one microgram per kilogram = 1 part per billion.
1 ng/L = one nanogram per liter or 1 ng/kg = one nanogram per kilogram = 1 part per trillion.

## CHEMTECH - FORD ANALYTICAL LABORATORY

## CHAIN OF CUSTODY

COMPANY: PACIFICORP - INTERWEST MINING COMPANY
ADDRESS: P.O. BOX 310 15 NORTH MAIN
CITY/STATE/ZIP: HUNTINGTON, UT 84528
PHONE #: 435-687-4720 FAX: 435-687-2695
CONTACT: CHUCK SEMBORSKI PROJECT: DEER CREEK MINE 11TH-17TH WEST
EMAIL: CHUCK.SEMBORSKI@PACIFICORP.COM

BILLING ADDRESS: 15 North Main Street
BILLING CITY/STATE/ZIP: Huntington UT 84528
PURCHASE ORDER #: 3000116067

CHEMTECH-FORD LABORATORIES

TURNAROUND REQUIRED:* JULY 1, 2016
* Expedited turnaround subject to additional charge

| Lab Use Only | CLIENT SAMPLE INFORMATION | | | | | TESTS REQUESTED | Bacteria | | | |
|---|---|---|---|---|---|---|---|---|---|---|
| E0973 | LOCATION / IDENTIFICATION | DATE | TIME | MATRIX | Field: Residual Chlorine | | Total Coliform + E. coli (Present/Absent) | Total Coliform + E. coli (Enumerated) | HPC (Plate Count) | E. Coli Only |
| -01 | 1. DEER CREEK MINE | 6/17/16 | 10:21 | | | SEE ATTACHED SHEET | | | | |
| | 2. 11TH-17TH WEST | | | | | | | | | |
| | 3. | | | | | | | | | |
| | 4. | | | | | | | | | |
| | 5. | | | | | | | | | |
| | 6. | | | | | | | | | |
| | 7. | | | | | | | | | |
| | 8. | | | | | | | | | |
| | 9. | | | | | | | | | |
| | 10. | | | | | | | | | |

Sampled by: [print] CHUCK SEMBORSKI
Sampled by: [signature]

ON ICE NOT ON ICE Temp (C°): 10.6

Special Instructions:

Samples received outside the EPA recommended temperature range of 0-6 C° may be rejected.

| Relinquished by: [signature] | Date/Time | Received by: [signature] | Date/Time |
|---|---|---|---|
| | 6/17/16 @ 11:25 | | 6/17/16 11:25am |
| | 6/17/16 @ 1452 | | 6-17-16 14:52 |
| | | | |

CHEMTECH-FORD
9632 South 500 West
Sandy, UT 84070

801.262.7299 PHONE
866.792.0093 FAX
www.chemtechford.com

Payment Terms are net 30 days OAC. 1.5% interest charge per month (18% per annum). Client agrees to pay collection costs and attorney's fees.

United States Environmental Protection Agency

# Priority Pollutant List

**Priority Pollutants** are a set of chemical pollutants we regulate, and for which we have developed analytical test methods. The current list of 126 Priority Pollutants, shown below, can also be found at 40 CFR Part 423, Appendix A.

These are not the only pollutants regulated in Clean Water Act programs. The list is an important starting point for EPA to consider, for example, in developing national discharge standards (such as Effluent Guidelines) or in national permitting programs (such as NPDES).

1. Acenaphthene
2. Acrolein
3. Acrylonitrile
4. Benzene
5. Benzidine
6. Carbon tetrachloride
7. Chlorobenzene
8. 1,2,4-trichlorobenzene
9. Hexachlorobenzene
10. 1,2-dichloroethane
11. 1,1,1-trichloroethane
12. Hexachloroethane
13. 1,1-dichloroethane
14. 1,1,2-trichloroethane
15. 1,1,2,2-tetrachloroethane
16. Chloroethane
17. (Removed)
18. Bis(2-chloroethyl) ether
19. 2-chloroethyl vinyl ethers
20. 2-chloronaphthalene
21. 2,4,6-trichlorophenol
22. Parachlorometa cresol
23. Chloroform
24. 2-chlorophenol
25. 1,2-dichlorobenzene
26. 1,3-dichlorobenzene
27. 1,4-dichlorobenzene
28. 3,3-dichlorobenzidine
29. 1,1-dichloroethylene
30. 1,2-trans-dichloroethylene
31. 2,4-dichlorophenol
32. 1,2-dichloropropane
33. 1,3-dichloropropylene
34. 2,4-dimethylphenol
35. 2,4-dinitrotoluene
36. 2,6-dinitrotoluene
37. 1,2-diphenylhydrazine
38. Ethylbenzene
39. Fluoranthene
40. 4-chlorophenyl phenyl ether
41. 4-bromophenyl phenyl ether
42. Bis(2-chloroisopropyl) ether
43. Bis(2-chloroethoxy) methane
44. Methylene chloride
45. Methyl chloride
46. Methyl bromide
47. Bromoform
48. Dichlorobromomethane
49. (Removed)
50. (Removed)
51. Chlorodibromomethane
52. Hexachlorobutadiene
53. Hexachlorocyclopentadiene
54. Isophorone
55. Naphthalene
56. Nitrobenzene
57. 2-nitrophenol
58. 4-nitrophenol
59. 2,4-dinitrophenol
60. 4,6-dinitro-o-cresol
61. N-nitrosodimethylamine
62. N-nitrosodiphenylamine
63. N-nitrosodi-n-propylamine
64. Pentachlorophenol
65. Phenol
66. Bis(2-ethylhexyl) phthalate
67. Butyl benzyl phthalate
68. Di-N-Butyl Phthalate

69. Di-n-octyl phthalate
70. Diethyl Phthalate
71. Dimethyl phthalate
72. Benzo(a) anthracene
73. Benzo(a) pyrene
74. Benzo(b) fluoranthene
75. Benzo(k) fluoranthene
76. Chrysene
77. Acenaphthylene
78. Anthracene
79. Benzo(ghi) perylene
80. Fluorene
81. Phenanthrene
82. Dibenzo(,h) anthracene
83. Indeno (1,2,3-cd) pyrene
84. Pyrene
85. Tetrachloroethylene
86. Toluene
87. Trichloroethylene
88. Vinyl chloride
89. Aldrin
90. Dieldrin
91. Chlordane
92. 4,4-DDT
93. 4,4-DDE
94. 4,4-DDD
95. Alpha-endosulfan
96. Beta-endosulfan
97. Endosulfan sulfate
98. Endrin
99. Endrin aldehyde
100. Heptachlor
101. Heptachlor epoxide
102. Alpha-BHC
103. Beta-BHC
104. Gamma-BHC
105. Delta-BHC
106. ~~PCB-1242 (Arochlor 1242)~~
107. ~~PCB-1254 (Arochlor 1254)~~
108. ~~PCB-1221 (Arochlor 1221)~~
109. ~~PCB-1232 (Arochlor 1232)~~
110. ~~PCB-1248 (Arochlor 1248)~~
111. ~~PCB-1260 (Arochlor 1260)~~
112. ~~PCB-1016 (Arochlor 1016)~~
113. Toxaphene
114. ~~Antimony~~
115. Arsenic
116. ~~Asbestos~~
117. ~~Beryllium~~
118. ~~Cadmium~~
119. ~~Chromium~~
120. ~~Copper~~
121. ~~Cyanide, Total~~
122. ~~Lead~~
123. ~~Mercury~~
124. ~~Nickel~~
125. ~~Selenium~~
126. ~~Silver~~
127. ~~Thallium~~
128. ~~Zinc~~
129. ~~2,3,7,8-TCDD~~

**Additional Information**

- Toxic and Priority Pollutants Under the Clean Water Act

# CHEMTECH FORD LABORATORIES

Sample Receipt

CHEMTECH-FORD LABORATORIES

**Work Order #** F0973

**Delivery Method:**

- ☐ UPS
- ☐ USPS
- ☐ FedEx
- ☐ Chemtech Courier
- ☒ Walk-in
- ☐ Customer Courier

**Receiving Temperature** 10.6 °C

| Sample # | Container | Chemtech Lot # or Preservative | Number of Subsamples | Preserved by Client/Third Party | Preserved in Receiving/Laboratory | Filtered in Field by Client | Misc Volume (oz/mL) | Comments |
|---|---|---|---|---|---|---|---|---|
| -01 | M | | | | | | | Lot # illegible |
| | Y (1-2) | 644 | | | | | | |
| | X (1-4) | | | | | | | |
| | X (1-4) | | | | | | | |

**Sample Condition** (check if yes)

- ☐ Custody Seals
- ☑ Containers Intact
- ☑ COC/Labels Agree
- ☑ Preservation Confirmed
- ☑ Received on Ice
- ☑ Correct Containers(s)
- ☑ Sufficent Sample Volume
- ☐ Headspace Present (VOC)
- ☐ Temperature Blank
- ☑ Received within Holding Time

**Plastic Containers**

A- Plastic Unpreserved
B- Miscellaneous Plastic
C- Cyanide Qt (NaOH)
E- Coliform/Ecoli/HPC
F- Sulfide Qt (Zn Acetate)
L- Mercury 1631
M- Metals Pint (HNO3)
N- Nutrient Pint (H2SO4)
R- Radiological (HNO3)
S- Sludge Cups/Tubs
Q- Plastic Bag

**Glass Containers**

D- 625 (Na2S2O3)
G- Glass Unpreserved
H- HAAs (NH4Cl)
J- 508/515/525 (Na2SO3)
K- 515.3 Herbicides
O- Oil & Grease (HCl)
P- Phenols (H2SO4)
T- TOC/TOX (H3PO4)
U- 531 (MCAA, Na2S2O3)
V- 524/THMs (Ascorbic Acid)
W- 8260 VOC (1:1 HCl)
X- Vial Unpreserved
Y- 624/504 (Na2S2O3)
Z- Miscellaneous Glass

# Analysis Report

August 16, 2016

**PACIFICORP**
FIELD OFFICE
PO BOX 1005
HUNTINGTON UT 84528



| | | | |
|---|---|---|---|
| Client Sample ID: | 11W-17W SEALS | Sample ID By: | PacifiCorp |
| Date Sampled: | Jul 12, 2016 | Sample Taken By: | CAS KSF |
| Date Received: | Jul 12, 2016 | Time Received: | 1325 |
| Product Description: | WATER | Time Sampled: | 1021 |
| | | Location: | 11W-17W SEALS |
| | | Mine: | 4 |
| | | Field - pH: | 7.66 pH units |
| | | Field - Conductivity: | 929 UMHOS/CM |
| | | Field - Temperature: | 13.4 DEG. C |

Comments: Dissolved Metals Filtered at Lab: Total Selenium 200.8 Analyzed at A.W.A.L.

**SGS Minerals Sample ID: 782-1638403-001**

| TESTS | RESULT | UNIT | METHOD | REPORTING LIMIT | ANALYZED DATE | ANALYZED TIME | ANALYST |
|---|---|---|---|---|---|---|---|
| Hardness, mg equivalent CaCO3/L | 304 | mg/L | SM2340-B | 1 | 2016-07-26 | 12:00:00 | HF |
| Acidity | <5 | mg/L | D1067 | 5 | 2016-06-30 | 15:00:00 | MS |
| Anions | 9.48 | meq/L | SM1030E | 0 | 2016-07-26 | 12:00:00 | HF |
| Balance | -2.24 | % | SM1030E | -10 | 2016-07-26 | 12:00:00 | HF |
| Cations | 9.07 | meq/L | SM1030E | 0 | 2016-07-26 | 12:00:00 | HF |
| Alkalinity, mg CaCO3/L (pH 4.5) | 362 | mg/L | SM2320-B | 5 | 2016-07-19 | 10:00:05 | MS |
| Bicarbonate Alkalinity as CaCO3 | 362 | mg/L | SM2320-B | 5 | 2016-07-19 | 10:00:05 | MS |
| Carbonate Alkalinity as CaCO3 | <5 | mg/L | SM2320-B | 5 | 2016-07-19 | 10:00:05 | MS |
| Nitrogen, Ammonia | 3.9 | mg/L | SM4500-B-D | 0.1 | 2016-07-25 | 07:30:00 | MS |
| pH | 7.39 | | SM4500-H | 0.01 | 2016-07-03 | 09:00:00 | MS |
| pH Temperature | 20.00 | °C | SM4500-H | 0.01 | 2016-07-03 | 09:00:00 | MS |
| Conductivity | 842 | µmhos/cm | SM2510 | 0.1 | 2016-07-21 | 11:37:32 | MS |
| Total Dissolved Solids | 489 | mg/L | SM2540-C | 30 | 2016-07-14 | 14:30:00 | MS |
| Nitrate | <0.05 | mg/L | EPA 300.0 | 0.05 | 2016-07-13 | 12:00:00 | HF |
| Nitrite | <0.05 | mg/L | EPA 300.0 | 0.05 | 2016-07-13 | 12:00:00 | HF |
| Chloride, Cl | 11 | mg/L | EPA 300.0 | 1 | 2016-07-13 | 12:00:00 | HF |
| Sulfate, SO4 | 93 | mg/L | EPA 300.0 | 1 | 2016-07-13 | 12:00:00 | HF |
| Ortho-Phosphate-P | <0.05 | mg/L | EPA 300.0 | 0.05 | 2016-07-13 | 12:00:00 | HF |
| Mercury, Hg - Total | <0.2 | µg/L | EPA 245.1 | 0.2 | 2016-08-04 | 07:00:00 | HF |

**METALS BY ICP**

Lab Supervisor

Domenic Ibanez
Lab Supervisor

SGS North America Inc. | Minerals Services Division
2035 North Airport Road Huntington UT 84528 t (435) 653-2311 f (435)-653-2436 www.sgs.com/minerals

Member of the SGS Group (Société Générale de Surveillance)

*This document is issued by the Company under its General Conditions of Service accessible at http://www.sgs.com/terms_and_conditions.htm. Attention is drawn to the limitation of liability, indemnification and jurisdiction issues defined therein.*

*Any holder of this document is advised that information contained hereon reflects the Company's findings at the time of its intervention only and within the limits of Client's instructions, if any. The Company's sole responsibility is to its Client and this document does not exonerate parties to a transaction from exercising all their rights and obligations under the transaction documents. Any unauthorized alteration, forgery or falsification of the content or appearance of this document is unlawful and offenders may be prosecuted to the fullest extent of the law.*

# Analysis Report

August 16, 2016

**PACIFICORP**
FIELD OFFICE
PO BOX 1005
HUNTINGTON UT 84528



| | | | |
|---|---|---|---|
| Client Sample ID: | 11W-17W SEALS | Sample ID By: | PacifiCorp |
| Date Sampled: | Jul 12, 2016 | Sample Taken By: | CAS KSF |
| Date Received: | Jul 12, 2016 | Time Received: | 1325 |
| Product Description: | WATER | Time Sampled: | 1021 |
| | | Location: | 11W-17W SEALS |
| | | Mine: | 4 |
| | | Field - pH: | 7.66 pH units |
| | | Field - Conductivity: | 929 UMHOS/CM |
| | | Field - Temperature: | 13.4 DEG. C |

Comments: Dissolved Metals Filtered at Lab: Total Selenium 200.8 Analyzed at A.W.A.L.

**SGS Minerals Sample ID: 782-1638403-001**

| TESTS | RESULT | UNIT | METHOD | REPORTING LIMIT | ANALYZED DATE | ANALYZED TIME | ANALYST |
|---|---|---|---|---|---|---|---|
| **METALS BY ICP (continued)** | | | | | | | |
| Aluminum, Al - Dissolved | 0.04 | mg/L | EPA 200.7 | 0.03 | 2016-07-19 | 10:00:00 | HF |
| Arsenic, As - Dissolved | <0.01 | mg/L | EPA 200.7 | 0.01 | 2016-07-19 | 10:00:00 | HF |
| Arsenic, As - Total | <0.01 | mg/L | EPA 200.7 | 0.01 | 2016-08-03 | 10:23:19 | HF |
| Boron, B - Total | 0.22 | mg/L | EPA 200.7 | 0.01 | 2016-08-03 | 10:23:19 | HF |
| Cadmium, Cd - Dissolved | <0.001 | mg/L | EPA 200.7 | 0.001 | 2016-07-19 | 10:00:00 | HF |
| Cadmium, Cd - Total | <0.001 | mg/L | EPA 200.7 | 0.001 | 2016-08-03 | 10:23:19 | HF |
| Calcium, Ca - Dissolved | 57.96 | mg/L | EPA 200.7 | 0.03 | 2016-07-19 | 10:00:00 | HF |
| Chromium, Cr - Total | 0.005 | mg/L | EPA 200.7 | 0.001 | 2016-08-03 | 10:23:19 | HF |
| Copper, Cu - Dissolved | <0.01 | mg/L | EPA 200.7 | 0.01 | 2016-07-19 | 10:00:00 | HF |
| Copper, Cu - Total | <0.01 | mg/L | EPA 200.7 | 0.01 | 2016-07-14 | 13:00:00 | HF |
| Iron, Fe - Total | 1.35 | mg/L | EPA 200.7 | 0.05 | 2016-07-14 | 13:00:00 | HF |
| Iron, Fe - Dissolved | <0.03 | mg/L | EPA 200.7 | 0.03 | 2016-07-19 | 10:00:00 | HF |
| Lead, Pb - Dissolved | <0.01 | mg/L | EPA 200.7 | 0.01 | 2016-07-19 | 10:00:00 | HF |
| Lead, Pb - Total | <0.01 | mg/L | EPA 200.7 | 0.01 | 2016-07-14 | 13:00:00 | HF |
| Magnesium, Mg - Dissolved | 38.76 | mg/L | EPA 200.7 | 0.01 | 2016-07-19 | 10:00:00 | HF |
| Manganese, Mn - Total | 0.020 | mg/L | EPA 200.7 | 0.002 | 2016-07-14 | 13:00:00 | HF |
| Manganese, Mn - Dissolved | 0.018 | mg/L | EPA 200.7 | 0.002 | 2016-07-19 | 10:00:00 | HF |
| Molybdenum, Mo - Dissolved | 0.011 | mg/L | EPA 200.7 | 0.005 | 2016-07-19 | 10:00:00 | HF |
| Nickel, Ni - Total | 0.037 | mg/L | EPA 200.7 | 0.001 | 2016-07-14 | 13:00:00 | HF |
| Potassium, K - Dissolved | 10.40 | mg/L | EPA 200.7 | 0.14 | 2016-07-19 | 10:00:00 | HF |

Lab Supervisor

Domenic Ibanez
Lab Supervisor

SGS North America Inc. | Minerals Services Division
2035 North Airport Road Huntington UT 84528 t (435) 653-2311 f (435)-653-2436 www.sgs.com/minerals

Member of the SGS Group (Société Générale de Surveillance)

*This document is issued by the Company under its General Conditions of Service accessible at http://www.sgs.com/terms_and_conditions.htm. Attention is drawn to the limitation of liability, indemnification and jurisdiction issues defined therein.*

*Any holder of this document is advised that information contained hereon reflects the Company's findings at the time of its intervention only and within the limits of Client's instructions, if any. The Company's sole responsibility is to its Client and this document does not exonerate parties to a transaction from exercising all their rights and obligations under the transaction documents. Any unauthorized alteration, forgery or falsification of the content or appearance of this document is unlawful and offenders may be prosecuted to the fullest extent of the law.*

# Analysis Report

August 16, 2016

**PACIFICORP**
FIELD OFFICE
PO BOX 1005
HUNTINGTON UT 84528



| | | | |
|---|---|---|---|
| Client Sample ID: | 11W-17W SEALS | Sample ID By: | PacifiCorp |
| Date Sampled: | Jul 12, 2016 | Sample Taken By: | CAS KSF |
| Date Received: | Jul 12, 2016 | Time Received: | 1325 |
| Product Description: | WATER | Time Sampled: | 1021 |
| | | Location: | 11W-17W SEALS |
| | | Mine: | 4 |
| | | Field - pH: | 7.66 pH units |
| | | Field - Conductivity: | 929 UMHOS/CM |
| | | Field - Temperature: | 13.4 DEG. C |

Comments: Dissolved Metals Filtered at Lab: Total Selenium 200.8 Analyzed at A.W.A.L.

**SGS Minerals Sample ID: 782-1638403-001**

| TESTS | RESULT | UNIT | METHOD | REPORTING LIMIT | ANALYZED DATE | ANALYZED TIME | ANALYST |
|---|---|---|---|---|---|---|---|
| **METALS BY ICP (continued)** | | | | | | | |
| Selenium, Se - Total | <0.02 | mg/L | EPA 200.7 | 0.02 | 2016-07-14 | 13:00:00 | HF |
| Selenium, Se - Total | <0.002 | mg/L | EPA 200.8 | 0.002 | 2016-08-05 | 13:24:00 | DI |
| Silver, Ag - Total | <0.002 | mg/L | EPA 200.7 | 0.002 | 2016-08-04 | 06:00:00 | HF |
| Sodium, Na - Dissolved | 62.50 | mg/L | EPA 200.7 | 0.09 | 2016-07-19 | 10:00:00 | HF |
| Zinc, Zn - Dissolved | <0.004 | mg/L | EPA 200.7 | 0.004 | 2016-07-19 | 10:00:00 | HF |
| Zinc, Zn - Total | <0.004 | mg/L | EPA 200.7 | 0.004 | 2016-07-14 | 13:00:00 | HF |

Lab Supervisor

Domenic Ibanez
Lab Supervisor

SGS North America Inc. | Minerals Services Division
2035 North Airport Road Huntington UT 84528 t (435) 653-2311 f (435)-653-2436 www.sgs.com/minerals

Member of the SGS Group (Société Générale de Surveillance)

*This document is issued by the Company under its General Conditions of Service accessible at http://www.sgs.com/terms_and_conditions.htm Attention is drawn to the limitation of liability, indemnification and jurisdiction issues defined therein.*

*Any holder of this document is advised that information contained hereon reflects the Company's findings at the time of its intervention only and within the limits of Client's instructions, if any. The Company's sole responsibility is to its Client and this document does not exonerate parties to a transaction from exercising all their rights and obligations under the transaction documents. Any unauthorized alteration, forgery or falsification of the content or appearance of this document is unlawful and offenders may be prosecuted to the fullest extent of the law.*

## Attachment F. Plan Set (Engineered Drawings)

# INTERWEST MINING COMPANY
# DEER CREEK MINE WATER RELIEF PIPELINE
## RILDA CANYON
## 2016

| PROJECT NO. | SHEET NO. |
|---|---|
| 1506-121 | 1 |

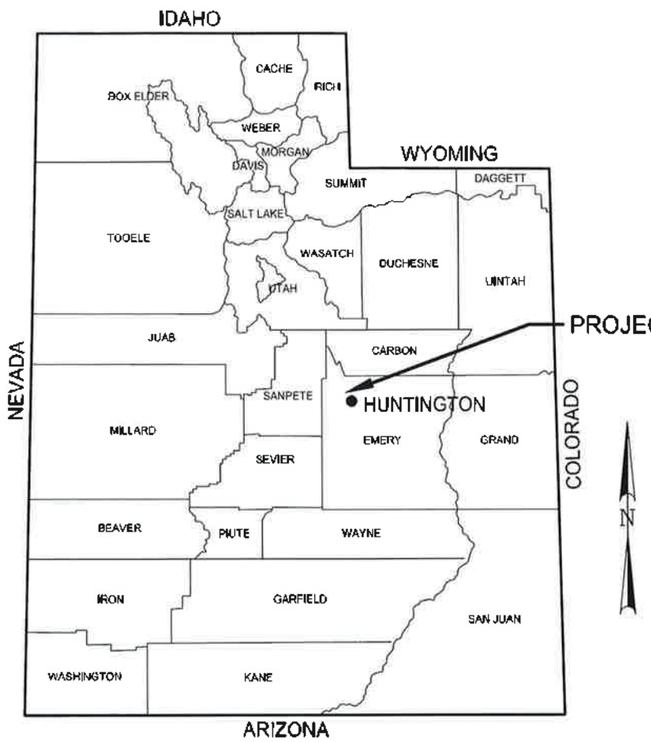


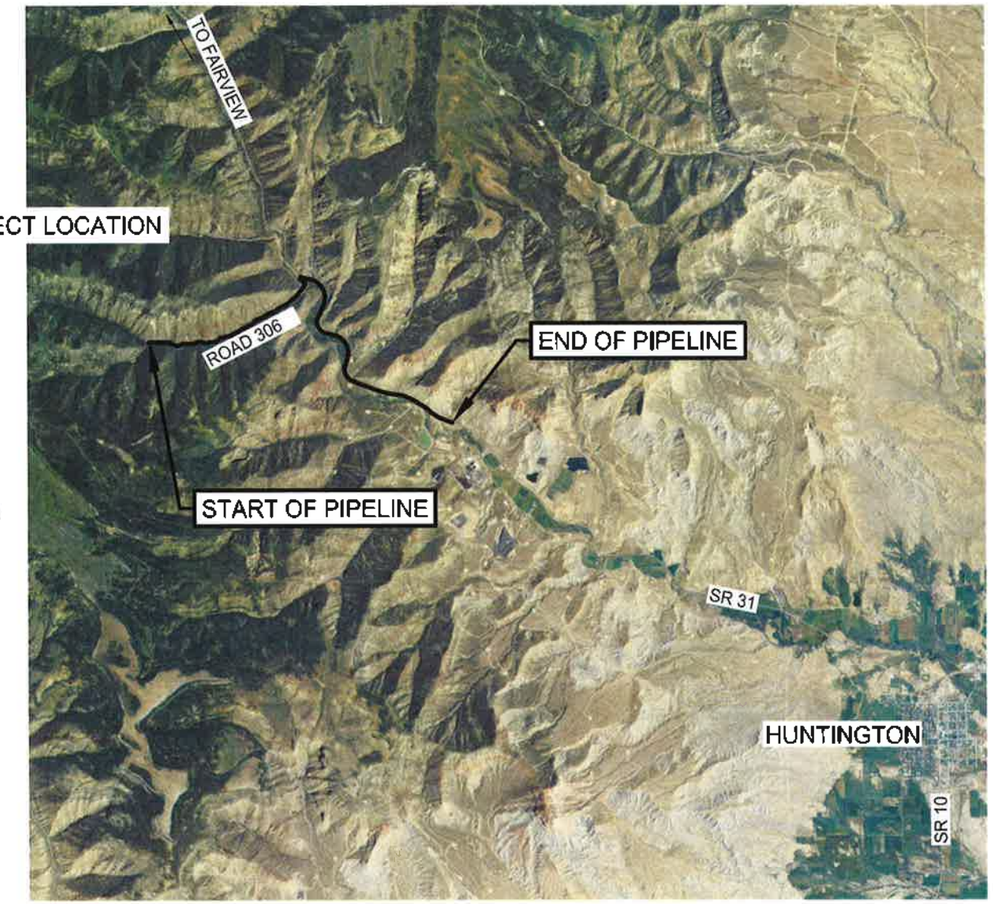


VICINITY MAP

## APPROVAL

RECOMMENDED FOR APPROVAL:

ENGINEER DATE

APPROVED:

INTERWEST MINING COMPANY DATE

**PRELIMINARY**
**SUBJECT TO REVISIONS**


Jones & DeMille Engineering, Inc.
CIVIL ENGINEERING - SURVEYING - TESTING
GIS - ENVIRONMENTAL
*- infrastructure professionals -*
1.800.748.5275 www.jonesanddemille.com

# INDEX TO SHEETS

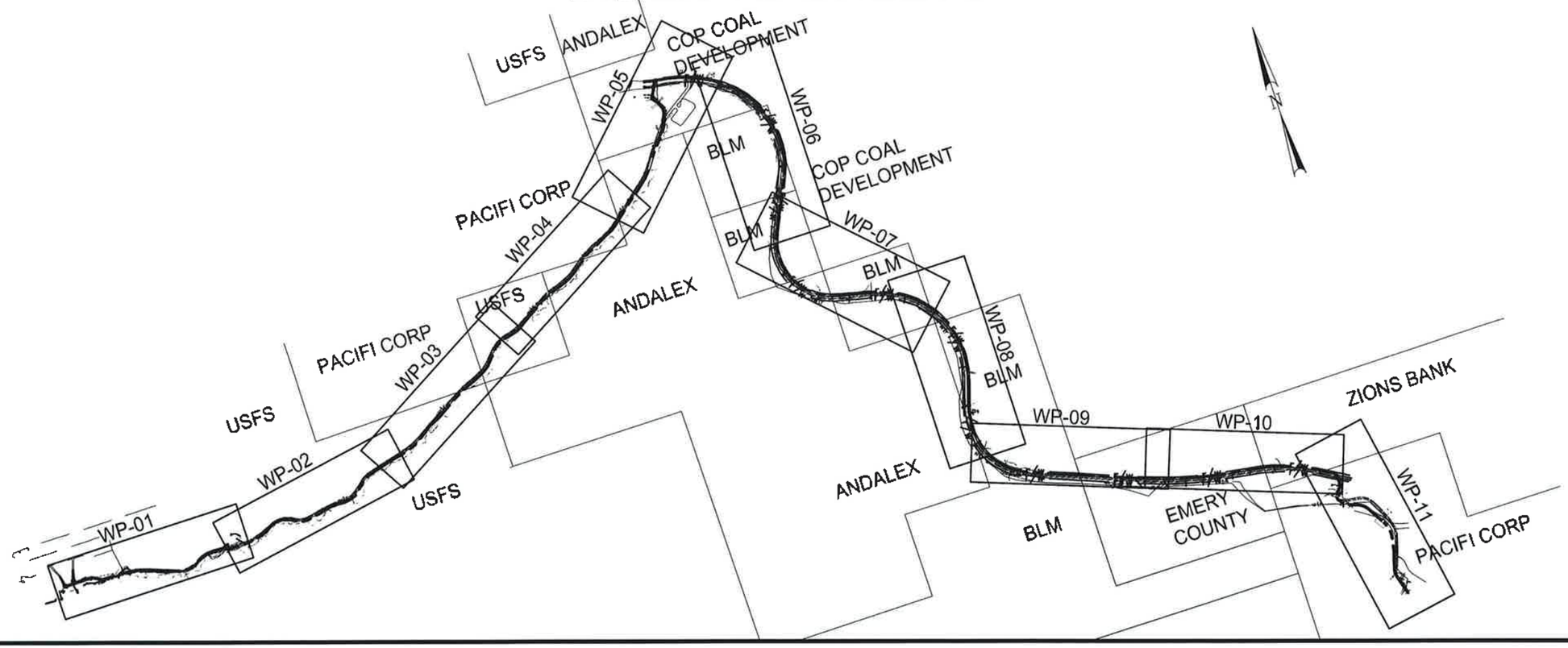


## INDEX

| SHEET NO. | DESCRIPTION |
|---|---|
| 1 | TITLE |
| 1A | INDEX TO SHEETS |
| 1B | LEGEND |
| DT-01 to DT-11 | DETAIL SHEETS |
| WP-01 to WP-11 | WATER PLAN & PROFILE SHEETS |
| SP-01 to SP-03 | SITE PLAN SHEETS |

PRELIMINARY
SUBJECT TO REVISIONS

Jones & DeMille Engineering, Inc.
CIVIL ENGINEERING - SURVEYING - TESTING
GIS - ENVIRONMENTAL
1.800.748.5275 www.jonesandmille.com

DESIGN | CHECK | REVIEW
DRAWN: TT 16-08 | CHECK | DATE:
QUALITY | CHECK | BY:

APPROVAL RECOMM. | DATE | PROJECT DESIGN ENGINEER
APPROVED | DATE

INTERWEST MINING COMPANY
DEER CRK MINE WTR RELIEF PIPE
INDEX TO SHEETS
PROJECT NUMBER: 1506-121

EMERY COUNTY

SHEET NO. 1A

| NO. | DATE | DESIGN BY | DRAWN BY | CHECKED BY | REMARKS |
|---|---|---|---|---|---|
| | | REVISIONS | | | |

ORIGINAL SUBMISSION FOR AUTHORIZATION

SCALE: NTS
DWG NAME: TITLE_PIPE
SHT SET: 1506-121P
DWG CREATED: 2015/10/06
PEN TBL: _Monochrome.ctb
UPDATED 9/21/2016
PLOTTED 9/21/2016

# LEGEND

## EXISTING FEATURES

- SANITARY SEWER LINE
- SANITARY SEWER MANHOLE
- CULINARY WATER LINE
- CULINARY WATER VALVE
- BURIED POWER LINE
- OVERHEAD POWER LINE
- BURIED TELEPHONE LINE
- OVERHEAD TELEPHONE LINE
- BURIED CABLE TV LINE
- OVERHEAD CABLE TV LINE
- FIBER OPTIC LINE
- NATURAL GAS LINE
- IRRIGATION LINE
- STORM DRAIN
- FENCE LINE (BARBED OR STOCKTIGHT)
- FENCE LINE (CHAIN LINK)
- DRAINAGE CULVERT
- CONCRETE SURFACING (SIDEWALK, CURB, GUTTER, ETC.)
- FLOW LINE OF DITCH
- EDGE OF ASPHALT SURFACING
- EDGE OF GRAVEL SURFACING
- EDGE OF DIRT SURFACING
- FIRE HYDRANT
- WATER METER
- STRUCTURE
- POWER POLE & GUY WIRE
- TREE
- DELINEATOR POST
- STREET SIGN
- TELEPHONE PEDESTAL
- MAILBOX

## MISC. FEATURES

- SUBDIVISION BOUNDARY LINE
- LOT LINES
- EXISTING RIGHT OF WAY LINE
- EXISTING N/A LINE
- EXISTING CITY BLOCK LINES (BLOCK LINE)
- PROPOSED RIGHT-OF-WAY LINE
- SECTION LINE
- QUARTER SECTION LINE
- (P.U.E.) PUBLIC UTILITY EASEMENT
- DEED LINE
- PROPERTY LINE

## ABBREVIATIONS

| | | | |
|---|---|---|---|
| TBC | TOP BACK OF CURB | EPP | POWER POLE |
| FLG | FLOW LINE OF GUTTER | SMH | SEWER MANHOLE |
| LOC | LIP OF CURB | CMH | COMMUNICATION MANHOLE |
| TSW | TOP OF SIDEWALK | R/W | RIGHT-OF-WAY |
| TOC | TOP OF CONCRETE | T.C.E. | TEMPORARY CONSTRUCTION EASEMENT |
| EOA | EDGE OF ASPHALT | | |
| TOA | TOP OF ASPHALT | P.U.E. | PUBLIC UTILITY EASEMENT |
| TOG | TOP OF GRATE | | |
| FLC | FLOW LINE OF CULVERT | STA | STATION |
| SW | SIDEWALK | L / LT | LEFT |
| FG | FINISHED GROUND | R / RT | RIGHT |

## PROPOSED FEATURES

- SANITARY SEWER LINE
- SANITARY SEWER MANHOLE
- SANITARY SEWER SERVICE
- CULINARY WATER LINE
- CULINARY WATER VALVE
- BURIED POWER LINE
- OVERHEAD POWER LINE
- BURIED TELEPHONE LINE
- OVERHEAD TELEPHONE LINE
- BURIED CABLE TV LINE
- OVERHEAD CABLE TV LINE
- FIBER OPTIC LINE
- NATURAL GAS LINE
- IRRIGATION LINE
- STORM DRAIN
- FENCE LINE (BARBED OR STOCKTIGHT)
- FENCE LINE (CHAIN LINK)
- DRAINAGE CULVERT
- EDGE OF ASPHALT
- EDGE OF CONCRETE
- FIRE HYDRANT
- CULINARY WATER METER
- DELINEATOR POST
- STREET SIGN
- POWER POLE
- MAILBOX
- CONCRETE SURFACING
- ASPHALT SURFACING
- TOP OF CUT LIMITS
- TOE OF FILL LIMITS
- DIRECTIONAL BORING AREA

PRELIMINARY
SUBJECT TO REVISIONS

| NO. | DATE | REVISIONS | BY |
|---|---|---|---|
| | | ORIGINAL SUBMISSION FOR AUTHORIZATION | |

REMARKS

DWG CREATED: 2015/10/06 UPDATED: 9/21/2016
DWG NAME: ITE-E.PPK PLOTTED: 9/21/2016
SHT SET: 1506-121 PEN TBL: _tetsplot2500.ctb

SCALE: NTS

Jones & DeMille Engineering, Inc.
CIVIL ENGINEERING - SURVEYING - TESTING
GIS - ENVIRONMENTAL
1.800.748.5275 www.jonesanddemille.com

DESIGN: DRAWN: TT CHECK: REVIEW: DATE: BY:
DATE: 15-08 CHECK: DATE: CHECK:
QUANT: CHECK:

PROJECT DESIGN ENGINEER: DATE
APPROVAL RECOMM: DATE
APPROVED: DATE

INTERWEST MINING COMPANY
DEER CRK MINE WTR RELIEF PIPE
LEGEND
PROJECT NUMBER: 1506-121

EMERY COUNTY

SHEET NO. 1B

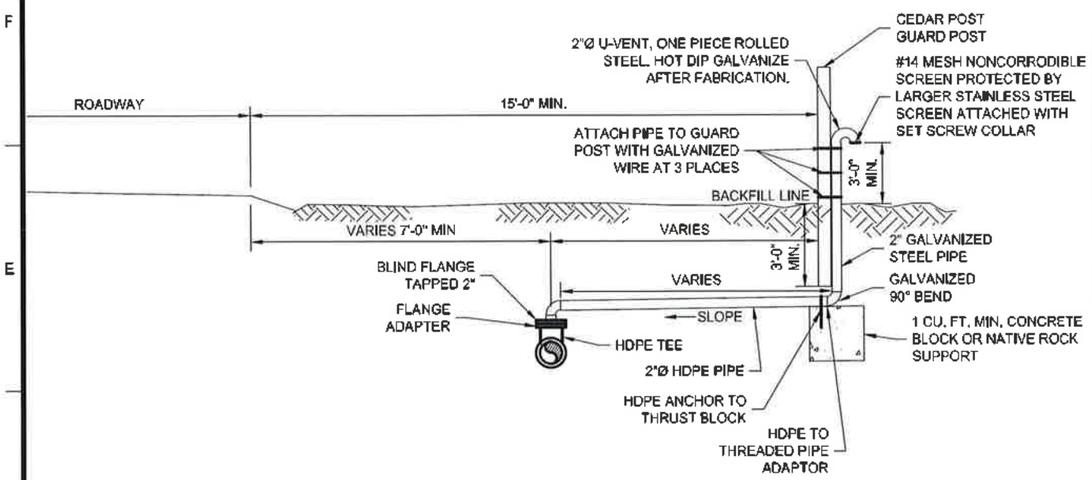


| D1 | ROADWAY INSTALLATION - GOOSENECK AIR VENT DETAIL |
|---|---|
| NTS | |

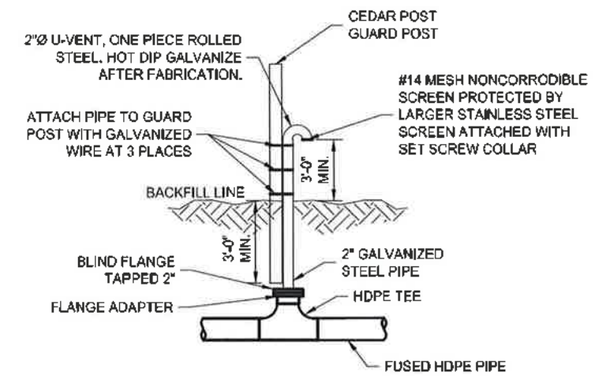


| D5 | STANDARD INSTALLATION - GOOSENECK AIR VENT DETAIL |
|---|---|
| NTS | |

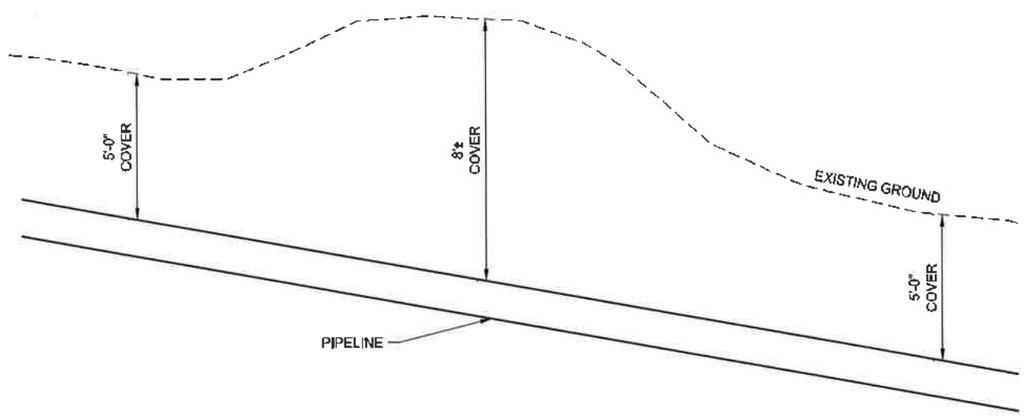


NOTE:
PIPE GRADE TO BE MAINTAINED THROUGH ALL HIGH SPOTS SHOWN ON PLAN SHEETS AND AT LOCATIONS ENCOUNTERED DURING CONSTRUCTION.

| A1 | PIPE GRADE DETAIL |
|---|---|
| NTS | |

PRELIMINARY
SUBJECT TO REVISIONS

| A5 | DETAIL NAME |
|---|---|
| NTS | |

| NO. | DATE | REVISIONS | REMARKS |
|---|---|---|---|
| | | ORIGINAL SUBMISSION FOR AUTHORIZATION | |

SCALE: VARIES
DWG NAME: DL-*NS2_PPG
SHT SET: ****
DWG CREATED: 09/09/2016
PEN TBL: —
PLOTTED: 9/21/2016

Jones & DeMille Engineering, Inc.
CIVIL ENGINEERING - SURVEYING - TESTING
GIS - ENVIRONMENTAL
1.800.746.5275 www.jonesanddemille.com

REVIEW
DESIGN: CHECK: DATE:
DRAWN: TT 08-16 CHECK: DATE:
QUANT: CHECK: BY:
PROJECT DESIGN ENGINEER
APPROVAL RECOMM. DATE
APPROVED DATE

INTERWEST MINING COMPANY
DEER CRK MINE WTR RELIEF PIPE
DETAILS
PROJECT NUMBER: 1506-121
EMERY COUNTY
SHEET NO. DT-01

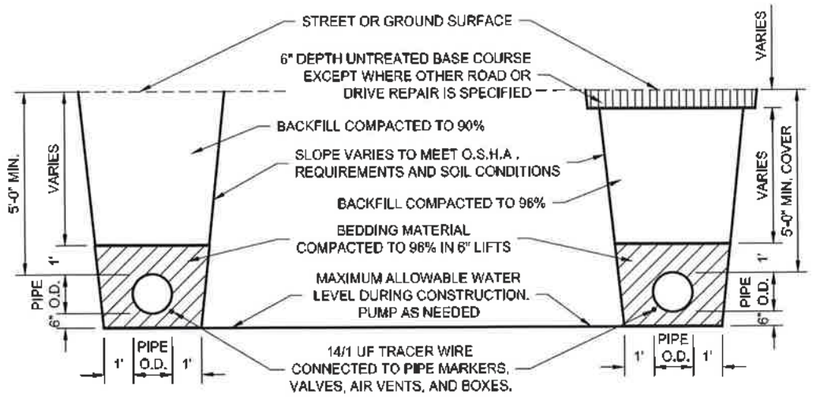


CLASS "D" BACKFILL

CLASS "B" BACKFILL

| D1 | WATER TRENCH DETAIL |
|---|---|
| NTS | |

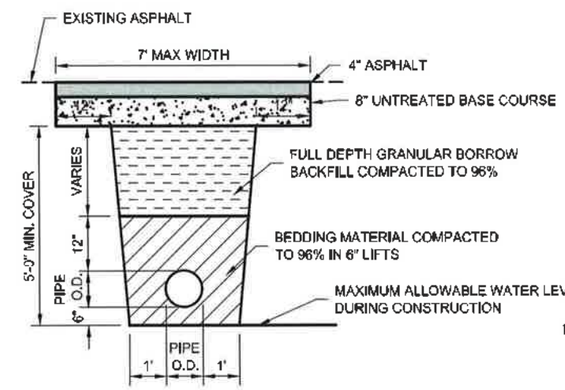


CLASS "A" PAVED STREET

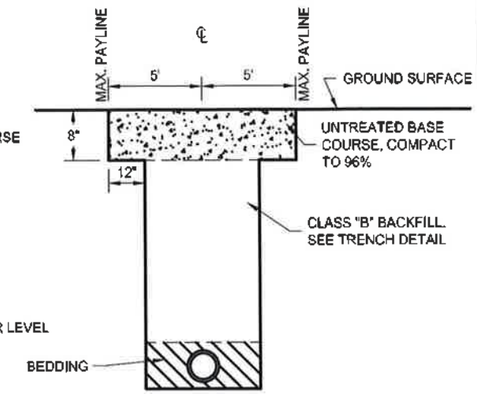


CLASS "C" ROADWAY

| D5 | ROAD REPAIR DETAILS |
|---|---|
| NTS | |

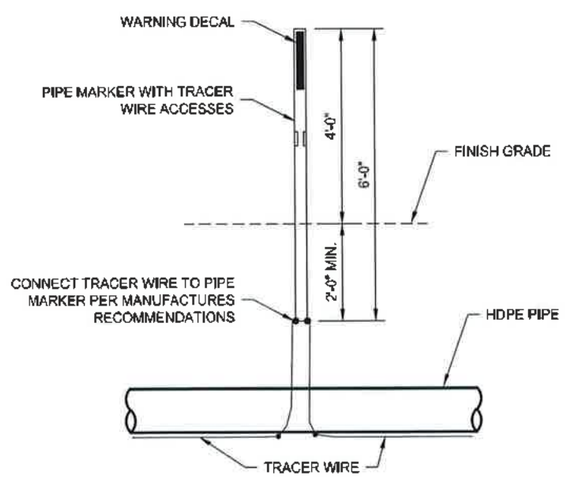


NOTE: LOCATE PIPE MARKER AT 300 FEET MAXIMUM INTERVALS.

| A1 | PIPE MARKER WITH TRACER WIRE |
|---|---|
| NTS | |

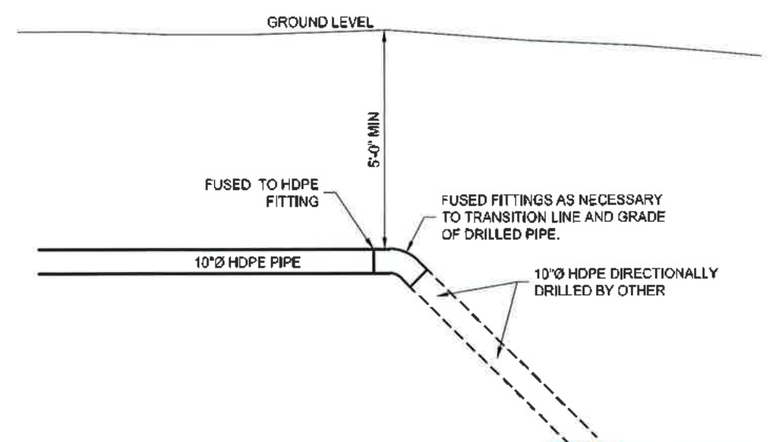


PRELIMINARY
SUBJECT TO REVISIONS

| A5 | DIRECTION DRILL CONNECTION |
|---|---|
| NTS | |

Jones & DeMille Engineering, Inc.
CIVIL ENGINEERING - SURVEYING - TESTING
GIS - ENVIRONMENTAL
1.800.748.5275 www.jonesanddemille.com

| NO. | DATE | DESIGN CHANGE REQUIRED BY | MAP CHANGE REQUIRED BY | PROJECT BY | REMARKS |
|---|---|---|---|---|---|

REVISIONS

ORIGINAL SUBMISSION FOR AUTHORIZATION

DWG NAME: DETAILS_PIPE
SHT SET: ####
DWG CREATED: 08/06/2016 UPDATED 9/21/2016
PEN TBL: —
NOTTED 9/21/2016
SCALE: VARIES

| | | | |
|---|---|---|---|
| DESIGN: | CHECK: | REVIEW | |
| DRAWN: TT 08-16 | CHECK: | DATE | |
| PLANT | CHECK: | BY | |

APPROVAL RECOMM. DATE
PROJECT ENGIN. ENGINEER
APPROVED DATE

INTERWEST MINING COMPANY
DEER CRK MINE WTR RELIEF PIPE
DETAILS
PROJECT NUMBER: 1506-121
EMERY COUNTY
SHEET NO. DT-02

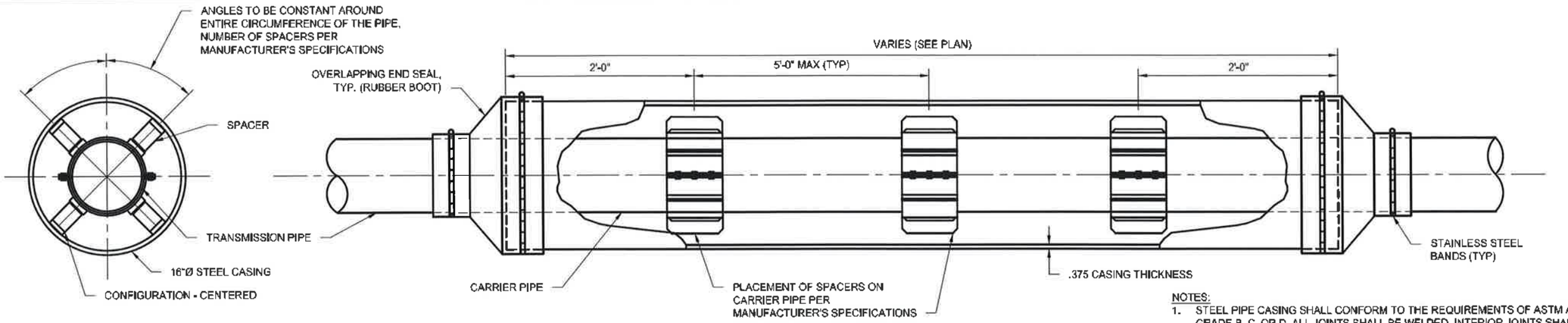


## CROSS SECTION

NOTES:

1. STEEL PIPE CASING SHALL CONFORM TO THE REQUIREMENTS OF ASTM A283, GRADE B, C, OR D. ALL JOINTS SHALL BE WELDED. INTERIOR JOINTS SHALL BE GROUND TO A SMOOTH FINISH. ALL WELDING SHALL BE PERFORMED IN ACCORDANCE WITH AWWA C206, "AWWA STANDARD FOR FIELD WELDING OF STEEL WATER PIPE." COATINGS FOR STEEL CASING ARE NOT REQUIRED.
2. STEEL PIPE CASING SHALL BE INSTALLED SYMMETRICAL ABOUT WATER MAIN CENTERLINE (TYP). PIPE CASING SHALL BE LAID TRUE TO LINE AND GRADE WITH NO BENDS OR CHANGES IN GRADE FOR THE FULL LENGTH OF CASING.
3. APPROVED CASING SPACERS AND END SEALS SHALL BE INSTALLED PER MANUFACTURERE'S SPECIFICATIONS. US A "CENTERED" CONFIGURATION AND PROVIDE THE MANUFACTURER WITH THE FOLLOWING: (PIPE OD, CASING ID, AND CASING LENGTH).
4. ALL PIPE JOINTS WITHIN THE CASING ARE TO BE MECHANICALLY RESTRAINED.

**E1** — *STEEL PIPE CASING DETAIL*

NTS

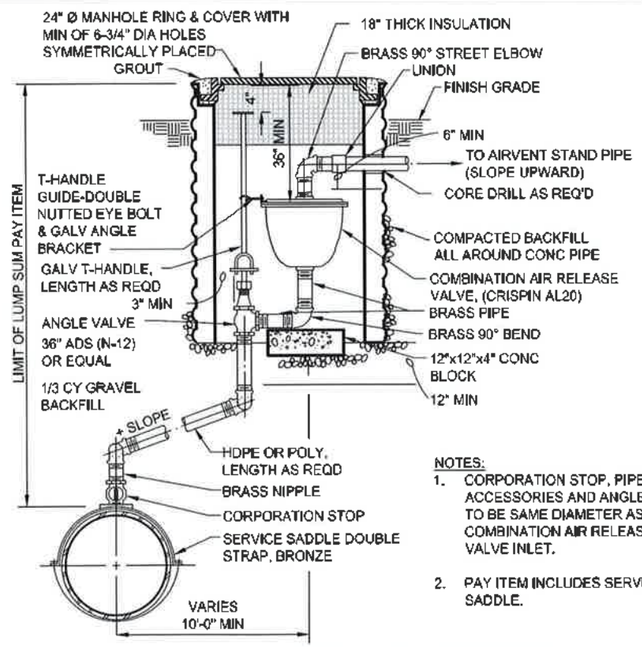


NOTES:

1. CORPORATION STOP, PIPE AND ACCESSORIES AND ANGLE VALVE TO BE SAME DIAMETER AS COMBINATION AIR RELEASE VALVE INLET.
2. PAY ITEM INCLUDES SERVICE SADDLE.

**A1** — *COMBINATION AIR RELEASE VALVE ASSEMBLY DETAIL*

NTS

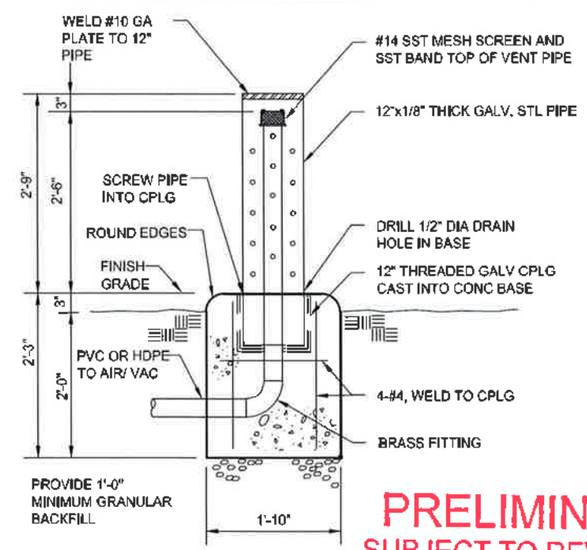


NOTE:
HOT DIP GALVANIZED AFTER FABRICATION

PRELIMINARY
SUBJECT TO REVISIONS

**A5** — *AIR VENT STAND PIPE DETAIL*

NTS

| NO. | DATE | REMARKS |
|---|---|---|
| | | ORIGINAL SUBMISSION FOR AUTHORIZATION |

REVISIONS

DWG CREATED: 08/09/2016 | UPDATED 9/21/2016
PLOTTED: 9/21/2016
DWG NAME: JEDVA5_PIPE
SHT SET: ---
PEN TBL: ---
SCALE: VARIES


Jones & DeMille Engineering, Inc.
CIVIL ENGINEERING - SURVEYING - TESTING
GIS - ENVIRONMENTAL
1.800.748.5275 www.jonesanddemille.com


DESIGN: | CHECK: | REVIEW
DRAWN: KJ 09-16 | CHECK: | DATE
GLAM | CHECK: | BY

PROJECT ENGINEER: | DATE
APPROVED | DATE

INTERWEST MINING COMPANY
DEER CRK MINE WTR RELIEF PIPE
DETAILS
PROJECT NUMBER: 1506-121

EMERY COUNTY

SHEET NO. DT-03

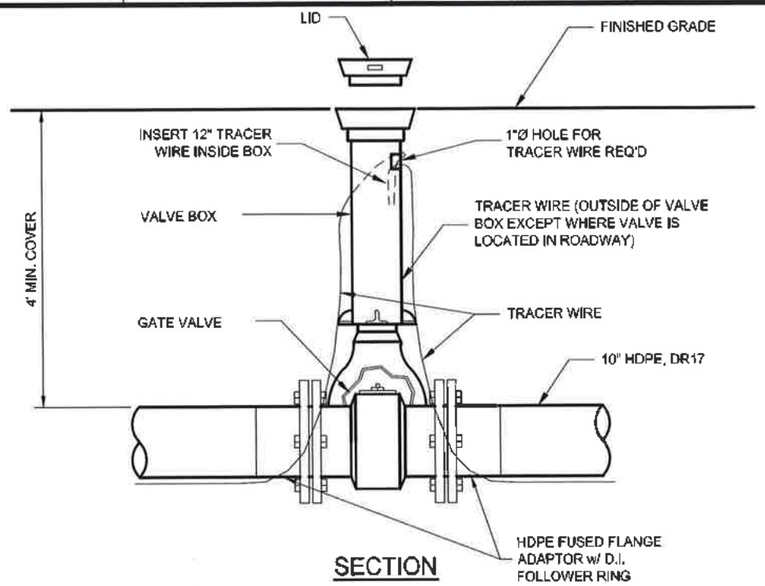


SECTION

NOTE:
1. COATED STEEL BOLTS REQUIRED AT ALL LOCATIONS.
2. VALVE LID TO BE SET 1/4" MAX BELOW FINISH GRADE

| D1 | GATE VALVE DETAIL |
|---|---|
| NTS | |

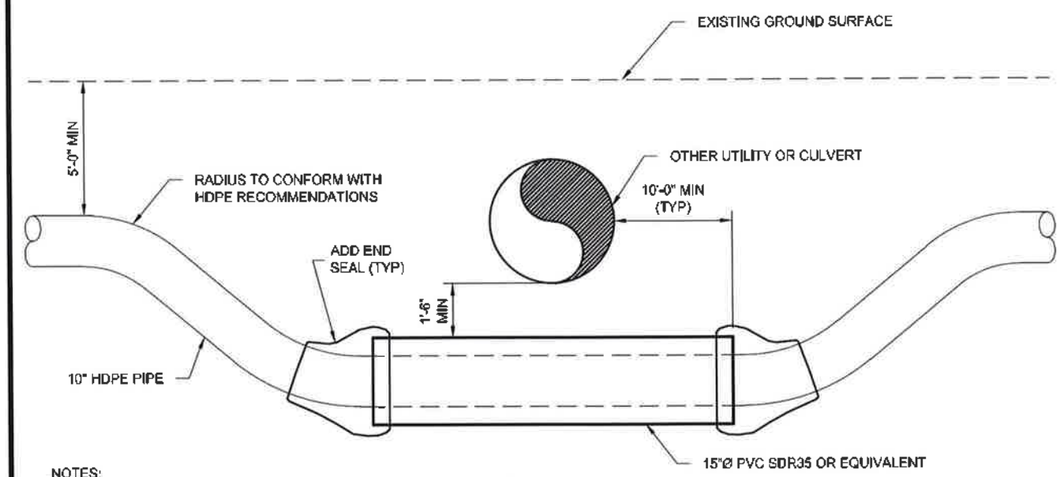


NOTES:
1. IF OTHER UTILITY IS DEEP ENOUGH TO ALLOW HDPE LINE TO BE PLACED ABOVE THE TOP OF OTHER UTILITY BY 1'-0" MINIMUM, NO LOOP NECESSARY.
2. CASING SPACERS REQ'D.
3. PVC CASING NOT REQUIRED UNDER CULVERTS.

| D5 | UTILITY CROSSING (LOOP) DETAIL |
|---|---|
| NTS | |

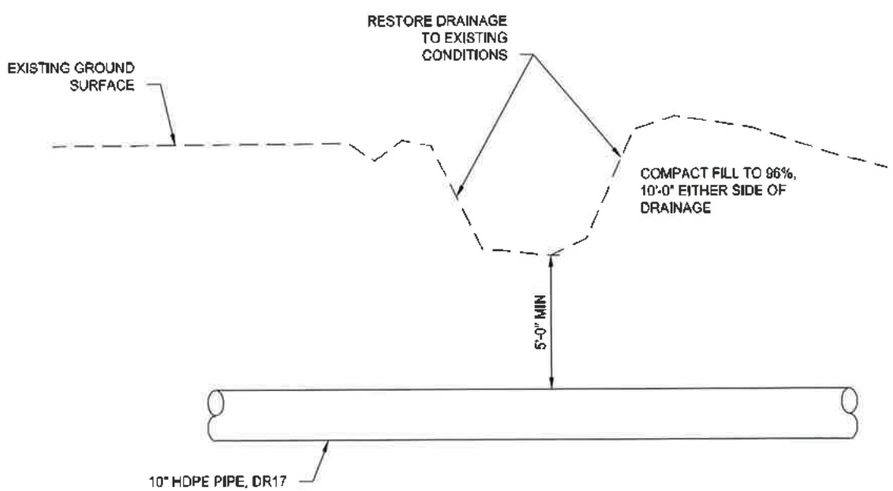


| A1 | DRAINAGE CROSSING DETAIL (TYP) |
|---|---|
| NTS | |

| A5 | DETAIL NAME |
|---|---|
| NTS | |

PRELIMINARY
SUBJECT TO REVISIONS

| NO | DATE | REMARKS |
|---|---|---|
| | | ORIGINAL SUBMISSION FOR AUTHORIZATION |

REVISIONS

DESIGN BY: LMW; DRAWN BY: KJ; REVIEW BY: ; CHECK BY: APPROVED
DWG NAME: DETAILS_PIPE; SHT SET: ; DWG CREATED: 08/09/2016; PEN TBL: —
UPDATED: 9/21/2016; PLOTTED: 9/21/2016
SCALE: VARIES

Jones & DeMille Engineering, Inc.
CIVIL ENGINEERING - SURVEYING - TESTING
GIS - ENVIRONMENTAL
1.800.748.5275 www.jonesanddemille.com

DESIGN: CHECK:
DRAWN: KJ 09-16 CHECK:
PLANT CHECK:
APPROVAL REQUIRED: DATE
PROJECT DESIGN ENGINEER: DATE
APPROVED: DATE

REVIEW
DATE BY

INTERWEST MINING COMPANY
DEER CRK MINE WTR RELIEF PIPE
DETAILS
PROJECT NUMBER: 1506-121

EMERY COUNTY
SHEET NO. DT-04

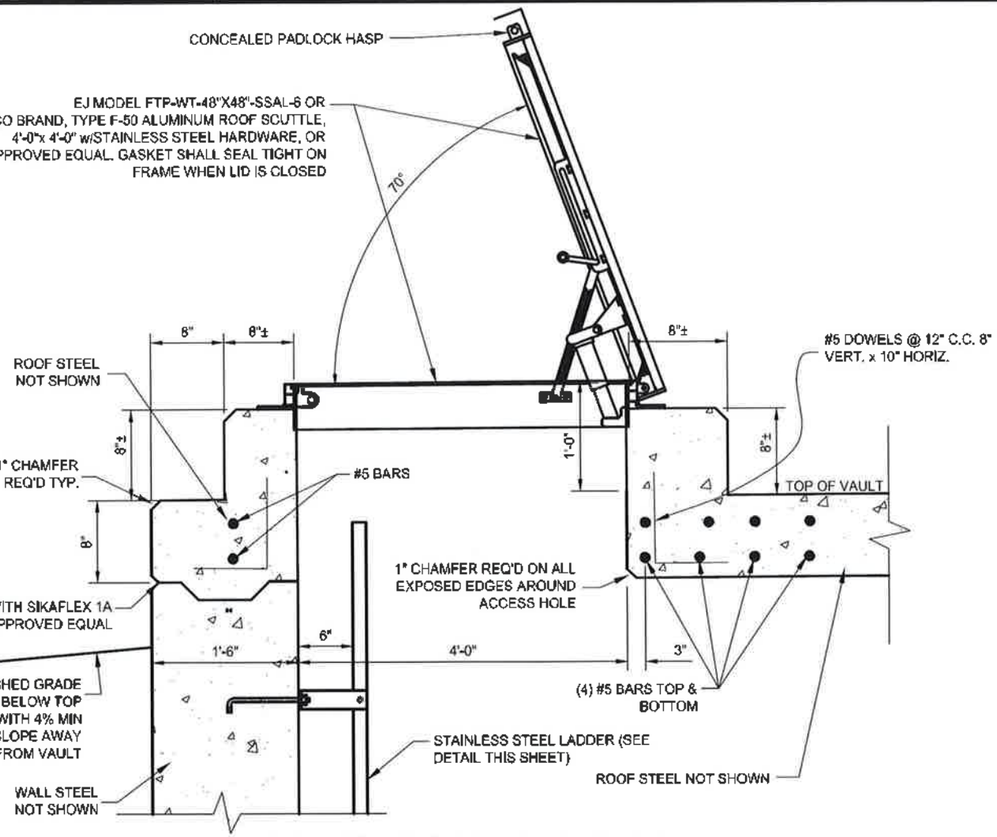


## ACCESS HOLE DETAIL

NOTE:
1. SEE SHEET DT-07 & DT-11 FOR ACCESS HOLE LOCATION.

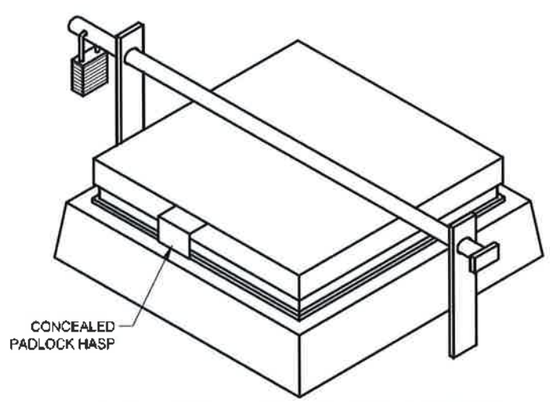


## ACCESS HOLE 3D VIEW

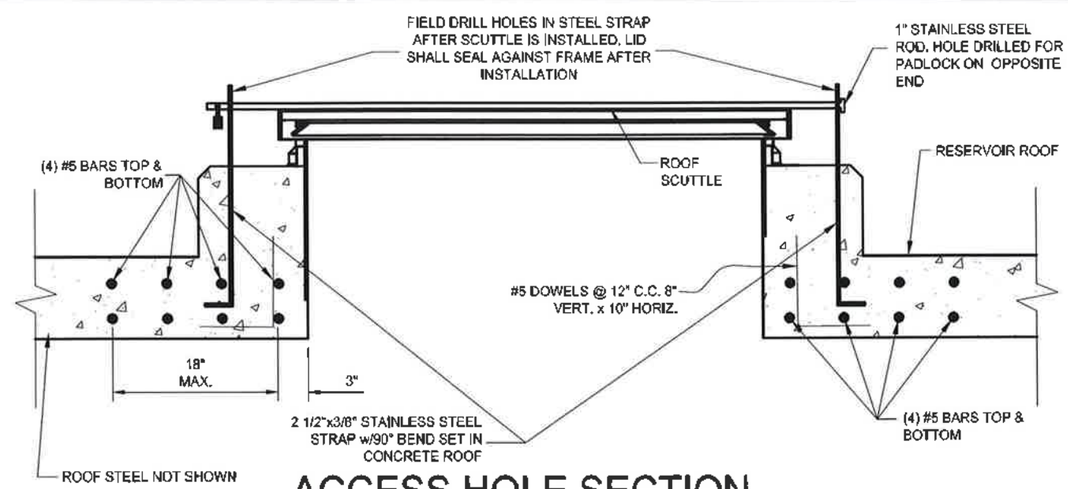


## ACCESS HOLE SECTION

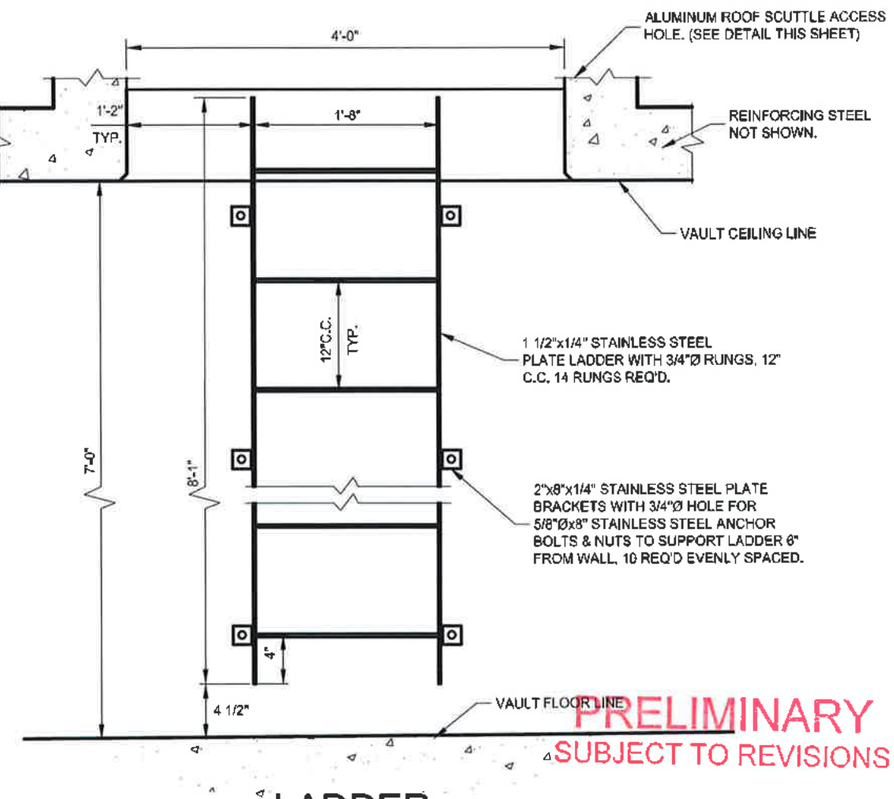


PRELIMINARY
SUBJECT TO REVISIONS

## LADDER

| | |
|---|---|
| A1 | VAULT ACCESS HATCH DETAIL |
| NTS | |

Jones & DeMille Engineering, Inc.
CIVIL ENGINEERING - SURVEYING - TESTING
GIS - ENVIRONMENTAL
1.800.748.5275 www.jonesandDemille.com

| No. | DATE | REVISIONS | REMARKS |
|---|---|---|---|
| | | ORIGINAL SUBMISSION FOR AUTHORIZATION | |

DESIGN: KJ 09-16 | DRAWN: | CHECK: | REVIEW | DATE | BY
DWG NAME: X-FAILS_PIPE | DWG CREATED: 08/06/2016 | UPDATED: 9/21/2016
SHT SET: ---- | PEN TBL: — | PLOTTED: 9/21/2016
SCALE: VARIES
PROJECT ENGINEER | APPROVAL RECOMM. | APPROVED

INTERWEST MINING COMPANY
DEER CRK MINE WTR RELIEF PIPE
DETAILS
PROJECT NUMBER: 1506-121
EMERY COUNTY
SHEET NO. DT-05

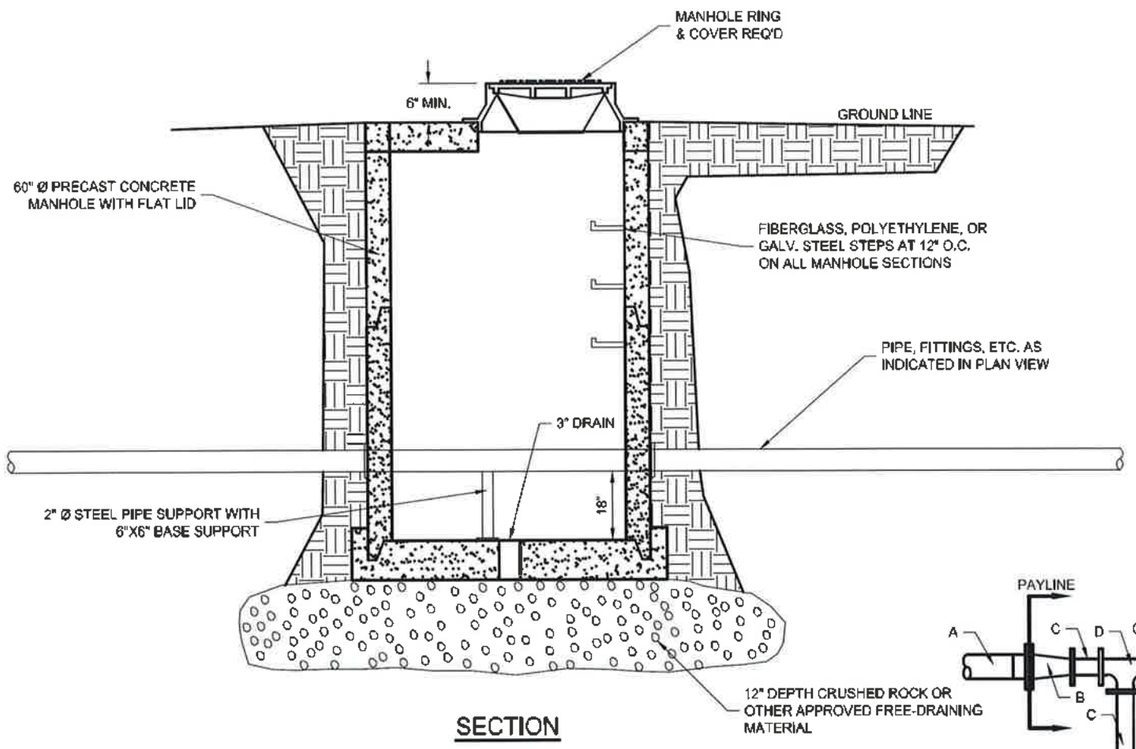


SECTION

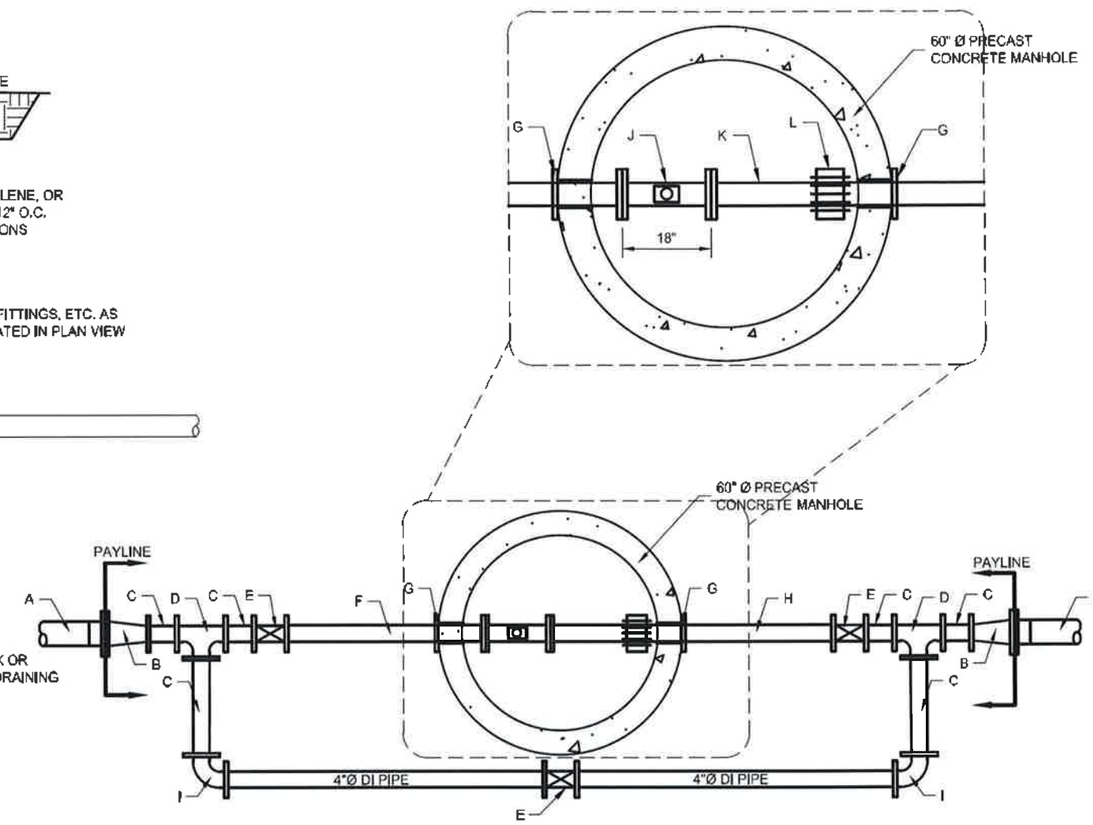


| DESCRIPTION | | | |
|---|---|---|---|
| A | 10" Ø HDPE PIPE w/ FUSED FLANGE ADAPTOR & FOLLOWER RING | J | 6" Ø TURBINE METER (RECORDALL TURBO, MODEL 2000 OR EQ.) |
| B | 10" X 6" REDUCER | K | 6" DUCTILE IRON PIPE 1'-6" LONG, FLG X PE |
| C | 6" Ø DI PIPE | L | RESTRAINED JOINT FLEXIBLE COUPLING |
| D | 6" X 6" TEE | | |
| E | 6" Ø GATE VALVE | | |
| F | 6" Ø DUCTILE IRON PIPE 3'-0" LONG, FLG X PE | | |
| G | MECHANICAL PIPE RESTRAINT | | |
| H | 6" Ø DUCTILE IRON PIPE 3'-0" LONG, FLG X PE | | |
| I | 4" 90° BEND | | |

PRELIMINARY
SUBJECT TO REVISIONS

| | |
|---|---|
| A1 | FLOWMETER AND VAULT DETAIL |
| NTS | |

Jones & DeMille Engineering, Inc.
CIVIL ENGINEERING - SURVEYING - TESTING
GIS - ENVIRONMENTAL
1.800.748.5275 www.jonesanddemille.com

| NO. | DATE | REVISIONS | REMARKS |
|---|---|---|---|
| | | ORIGINAL SUBMISSION FOR AUTHORIZATION | |

DWG NAME: DETAILS_PIPE
SHT SET: ####
DWG CREATED: 08/09/2016
UPDATED: 9/21/2016
PLOTTED: 9/21/2016
PEN TBL: —
SCALE: VARIES

DESIGN: C-SCK
DRAWN: KJ 08-16
QUANT: C-SCK
REVIEW: C-SCK
DATE
BY

APPROVAL RECOMM. DATE
PROJECT ENGINEER
APPROVED DATE

INTERWEST MINING COMPANY
DEER CRK MINE WTR RELIEF PIPE
DETAILS
PROJECT NUMBER: 1506-121
EMERY COUNTY
SHEET NO. DT-06

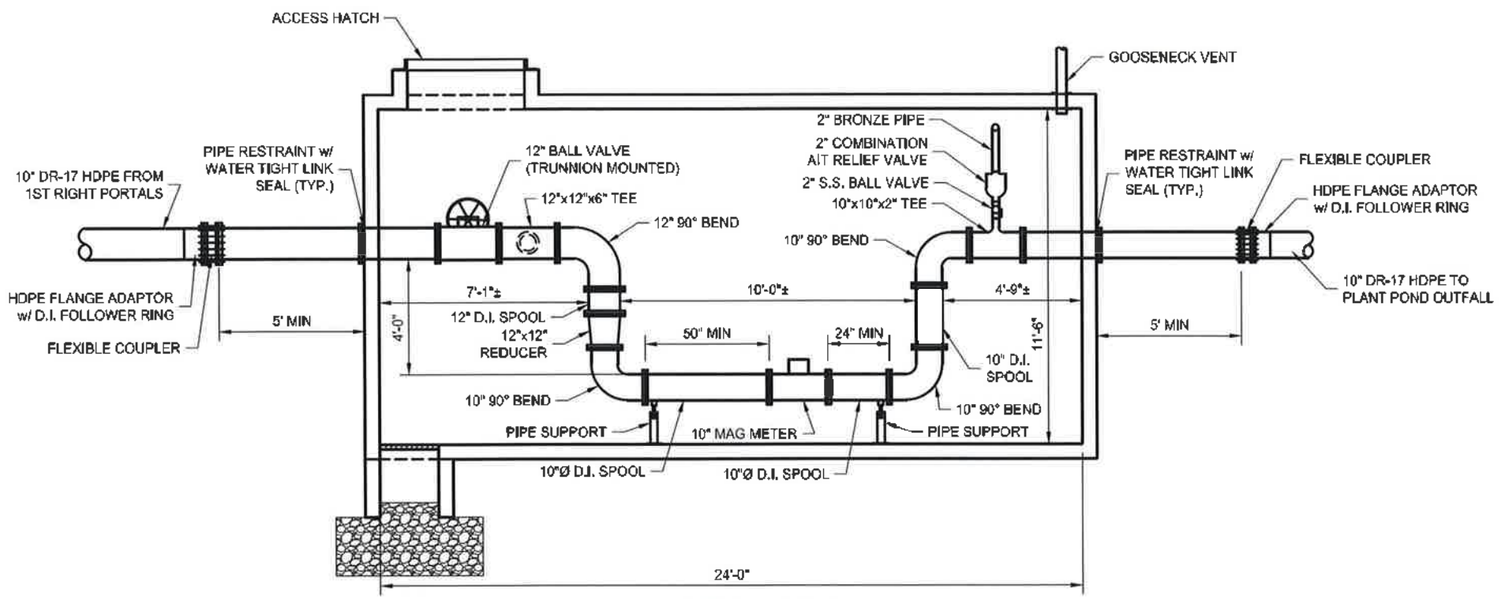


SECTION VIEW

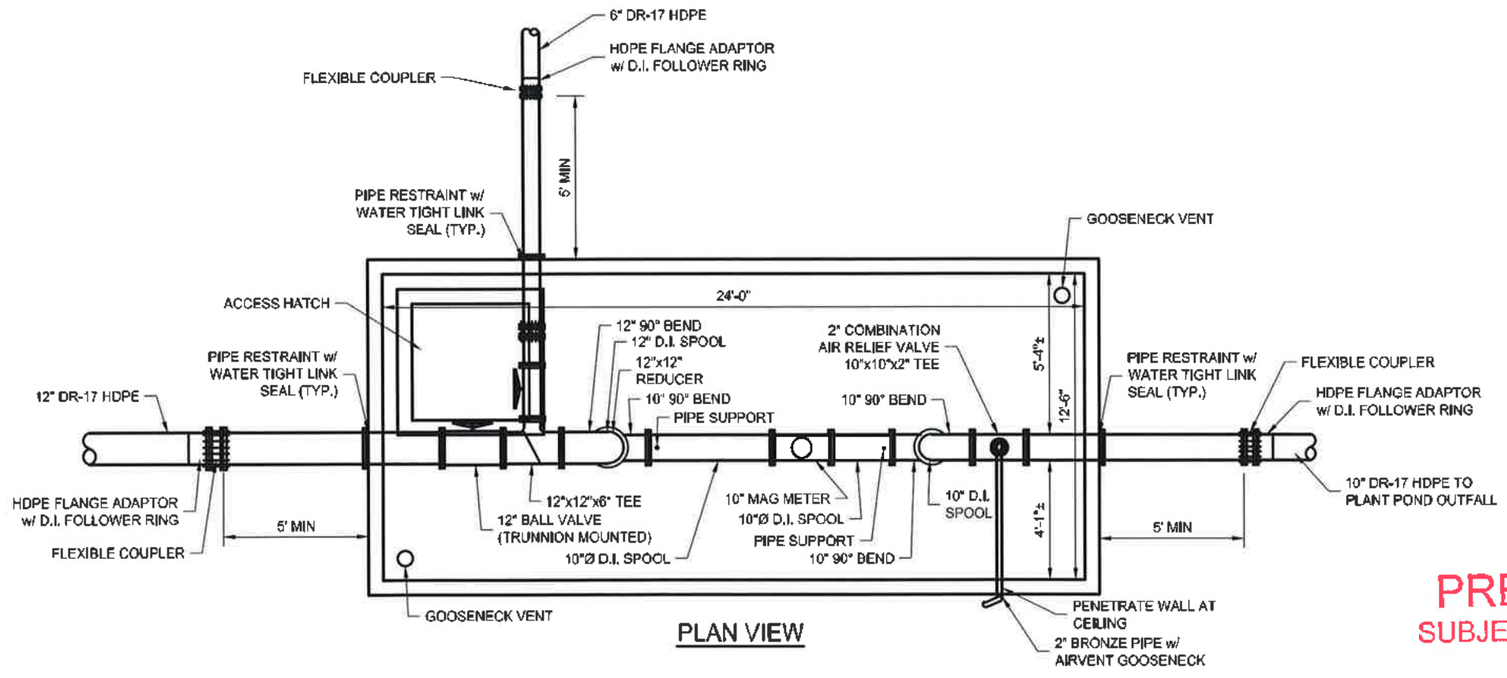


PLAN VIEW

PRELIMINARY
SUBJECT TO REVISIONS

| | |
|---|---|
| A1 | 1ST RIGHT PORTAL VAULT PLUMBING (WITH FLOWMETER) |
| NTS | |

Jones & DeMille Engineering, Inc.
CIVIL ENGINEERING - SURVEYING - TESTING
GIS - ENVIRONMENTAL
1.800.748.5275 www.jonesanddemille.com

DESIGN: JA 16-08 CHECK: CF 16-09 REVIEW
DRAWN: KJ 08-16 CHECK: CF 16-09 DATE
CLARY CHECK: BY

APPROVAL RECOMM. DATE
APPROVED DATE
PROJECT DESIGN ENGINEER

NO. | DATE | REVISION BY | CHECK BY | APPROVED BY | REMARKS
ORIGINAL SUBMISSION FOR AUTHORIZATION

REVISIONS

DWG NAME: DI_VAULS_PIPE
SHT SET: MAP
DWG CREATED: 08/09/2016
PEN TBL: —
UPDATED 9/12/2016
PLOTTED 9/12/2016

SCALE VARIES

INTERWEST MINING COMPANY
DEER CRK MINE WTR RELIEF PIPE
DETAILS
PROJECT NUMBER: 1506-121

EMERY COUNTY

SHEET NO. DT-07

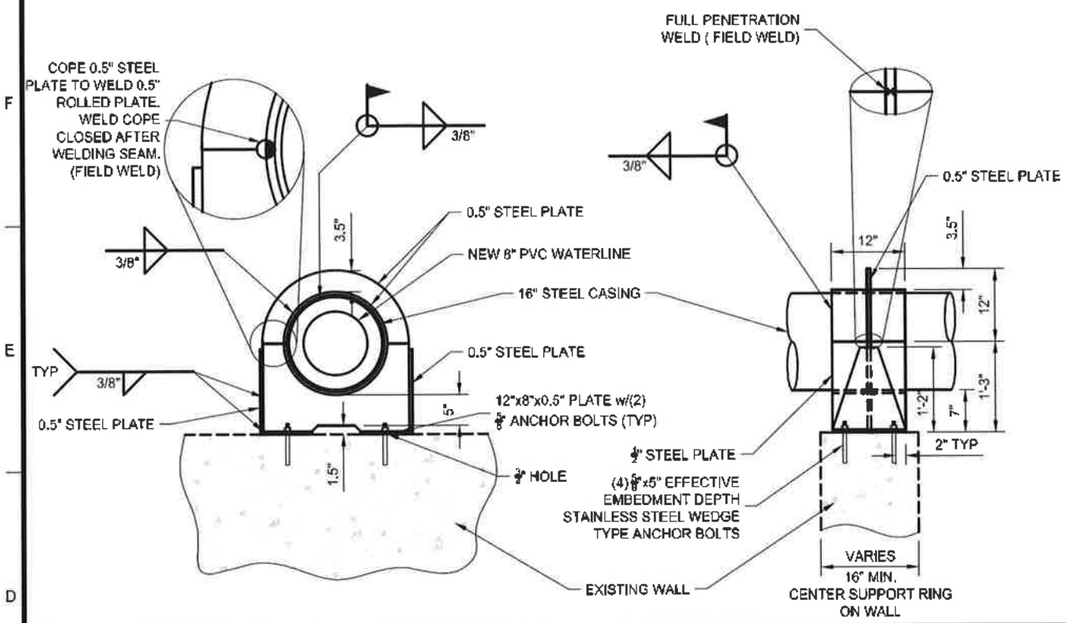


| D1 | PIPE SUPPORT RING |
|---|---|
| NTS | |

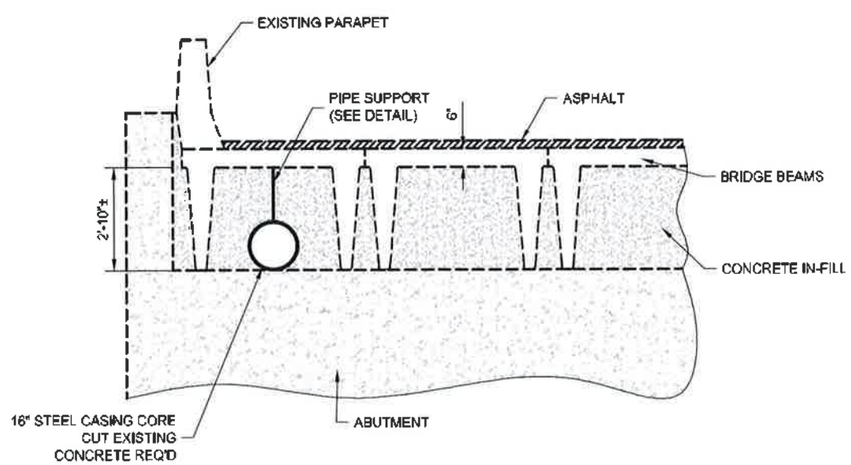


| A1 | RILDA BRIDGE CASING DETAIL |
|---|---|
| NTS | |

| D5 | DETAIL NAME |
|---|---|
| NTS | |

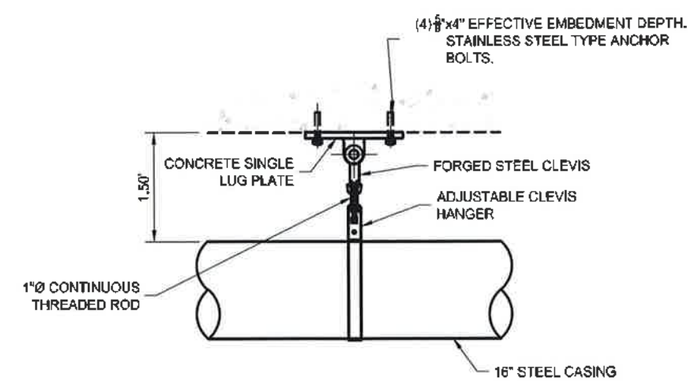


NOTE:
PIPE SUPPORT COMPONENTS BY ANVIL INTERNATIONAL OR EQUIVALENT
CONCRETE SINGLE LUG PLATE - FIGURE 47
FORGED STEEL CLEVIS - FIGURE 299
CONTINUOUS THREAD ROD - FIGURE 146
ADJUSTABLE CLEVIS HANGER - FIGURE 260

PRELIMINARY
SUBJECT TO REVISIONS

| A5 | PIPE SUPPORT DETAIL |
|---|---|
| NTS | |

| NO. | DATE | REMARKS |
|---|---|---|
| | | ORIGINAL SUBMISSION FOR AUTHORIZATION |

REVISIONS

DWG NAME: 2LHU5_PIPE
SHT SET: ----
DWG CREATED: 08/09/2016
PEN TBL: —
UPDATED: 9/21/2016
PLOTTED: 9/21/2016

SCALE: VARIES

Jones & DeMille Engineering, Inc.
CIVIL ENGINEERING - SURVEYING - TESTING
GIS - ENVIRONMENTAL
1.800.748.5275 www.jonesanddemille.com

DESIGN: | CHECK: | REVIEW
DRAWN: TT 08-16 | CHECK: | DATE
CLIENT | CHECK: | BY

APPROVAL RECOMM. DATE | PROJECT ENGINEER
APPROVED: DATE

INTERWEST MINING COMPANY
DEER CRK MINE WTR RELIEF PIPE
DETAILS
PROJECT NUMBER: 1506-121

EMERY COUNTY

SHEET NO. DT-08

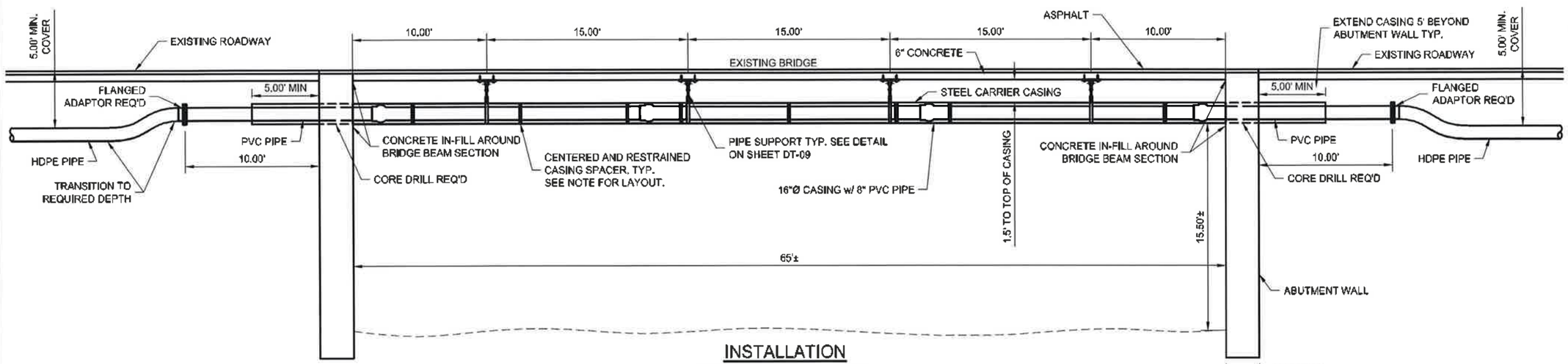


## INSTALLATION

NOTE: CASING SPACER LAYOUT AT 2', 10', & 18' PER 20' LENGTH OR 2.5' & 10.5' PER 13' LENGTH

SEE A1 ON SHEET DT-09 FOR SECTION VIEW.

PRELIMINARY
SUBJECT TO REVISIONS

| A1 | RILDA BRIDGE CASING INSTALLATION DETAIL |
|---|---|
| NTS | |

Jones & DeMille Engineering, Inc.
CIVIL ENGINEERING - SURVEYING - TESTING
GIS - ENVIRONMENTAL
1.800.748.5275 www.jonesanddemille.com

| NO | DATE | REMARKS |
|---|---|---|
| | | ORIGINAL SUBMISSION FOR AUTHORIZATION |

REVISIONS

SCALE: NTS
DWG NAME: DETAILS_PIPE
SHT SET: Rilda
DWG CREATED: 08/09/2016
PEN TBL: —
UPDATED: 9/21/2016
PLOTTED: 9/21/2016

REVIEW
DESIGN: TT
DRAWN: 08-16
CHECK:
QA/AT:
APPROVAL RECOMM.
APPROVED
DATE
BY

INTERWEST MINING COMPANY
DEER CRK MINE WTR RELIEF PIPE
DETAILS
PROJECT NUMBER: 1506-121
EMERY COUNTY
SHEET NO. DT-09

## PRV TYPE 1 PIPING SCHEDULE

| MK | DESCRIPTION | SIZE | CONNEC. | REQ'D | REMARKS |
|---|---|---|---|---|---|
| 1 | MAG METER | 10" | FL. | 1 | |
| 2 | D.I. SPOOL | 10"x2'-4" | FL. | 2 | |
| 3 | D.I. TEE | 10" | FL. | 1 | |
| 4 | PIPE SUPPORT | | | 6 | |
| 5 | D.I. REDUCING TEE | 10"x10"x6" | FL. | 2 | |
| 6 | D.I. SPOOL | 10"x22" | FL. | 1 | |
| 7 | BALL VALVE | 10" | FL. | 2 | CLASS 150 WKM 370D4 TRUNNION MOUNTED BALL VALVE |
| 8 | PIPE RESTRAINT | | FL. | 2 | INSTALL FLUSH WITH OUTSIDE EDGE OF CONC. WALL |
| 9 | D.I. SPOOL | 10"x2'-9" | FL. | 1 | |
| 10 | D.I. SPOOL | 10"x8'-8" | FL. | 1 | |
| 11 | D.I. SPOOL | 10"x6'-10" | FL. | 1 | |
| 12 | D.I. SPOOL | 10"x9'-5" | FL. | 1 | |
| 13 | D.I. REDUCING TEE | 6"x6'x2" | FL.xTHD. | 2 | |
| 14 | BALL VALVE | 6" | FL. | 3 | CLASS 150 WKM 370D4 TRUNNION MOUNTED BALL VALVE |
| 15 | PRESSURE RELIEF VALVE | 6" | FL.xFL. | 1 | CLA-VAL MODEL 50-01 OR APPROVED EQUAL |
| 16 | D.I. SPOOL | 6" | FL. | 3 | FIELD VERIFY LENGTHS , 8" 13", & 16" |
| 17 | D.I. TEE | 6" | FL. | 1 | |
| 18 | D.I. SPOOL | 6"X4.75" | FL. | 2 | |
| 19 | 90° BEND | 6" | FL. | 1 | |
| 20 | D.I. SPOOL | 6"x4'-10" | FL. | 1 | |
| 21 | D.I. SPOOL | 2"x11" | THD. | 1 | |
| 22 | 90° BEND | 2" | THD. | 1 | |
| 23 | D.I. SPOOL | 2"x20" | THD. | 2 | 1 TAPPED FOR SAMPLE COCK |
| 24 | BALL VALVE | 2" | THD. | 1 | CLASS 150 WKM 370D4 TRUNNION MOUNTED BALL VALVE |
| 25 | SAMPLE COCK | 3/4" | | 1 | SMOOTH NOSED SAMPLE COCK |

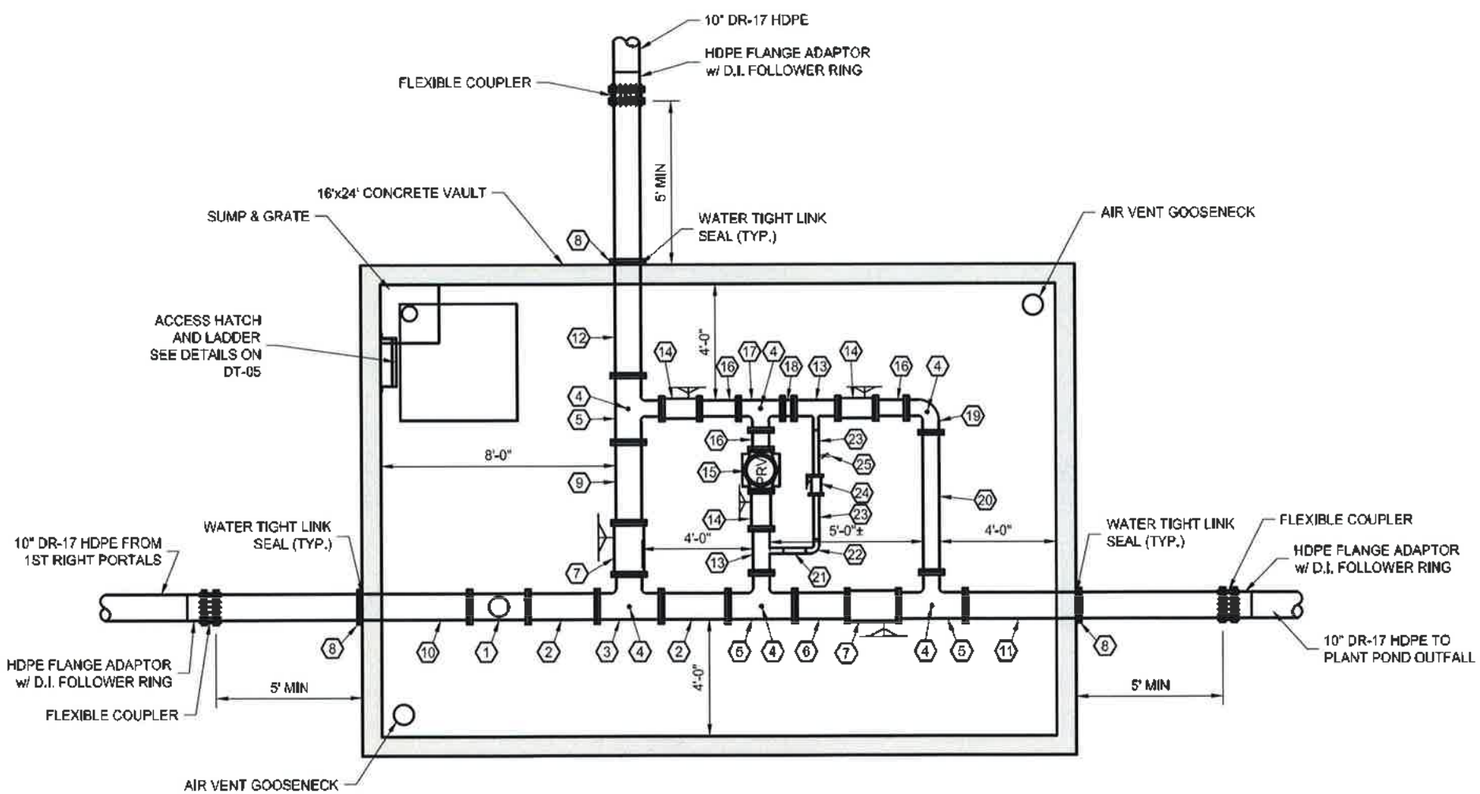


PRELIMINARY
SUBJECT TO REVISIONS

A1 | *PLANT POND VAULT PLUMBING*

NTS

| NO. | DATE | REMARKS |
|---|---|---|
| | | |

DESIGN BY: MARK DANIELS | DRAWN BY: CORY WATERFIELD | REQUEST BY:

ORIGINAL SUBMISSION FOR AUTHORIZATION

REVISIONS

SCALE: VARIES

DWG NAME: DETAILS_PPS | DWG CREATED: 08/05/2016 | UPDATED: 9/21/2016
SHT SET: | PEN TBL: — | PLOTTED: 9/21/2016


Jones & DeMille Engineering, Inc.
CIVIL ENGINEERING - SURVEYING - TESTING
GIS - ENVIRONMENTAL
1.800.748.5275 www.jonesanddemille.com


DESIGN: KJ | CHECK: | REVIEW
DRAWN: 09-16 | DATE: | DATE:
CHART: | CHECK: | BY:

APPROVAL RECOMM. | DATE | PROJECT DESIGN ENGINEER
APPROVED | DATE

INTERWEST MINING COMPANY
DEER CRK MINE WTR RELIEF PIPE
DETAILS
PROJECT NUMBER: 1506-121

EMERY COUNTY

SHEET NO. DT-10

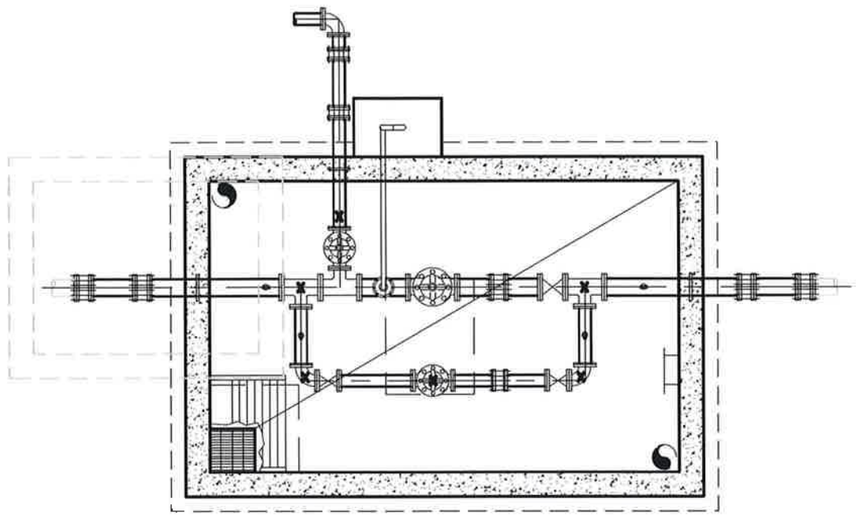

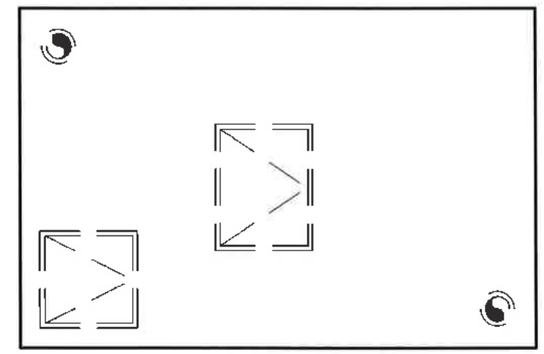

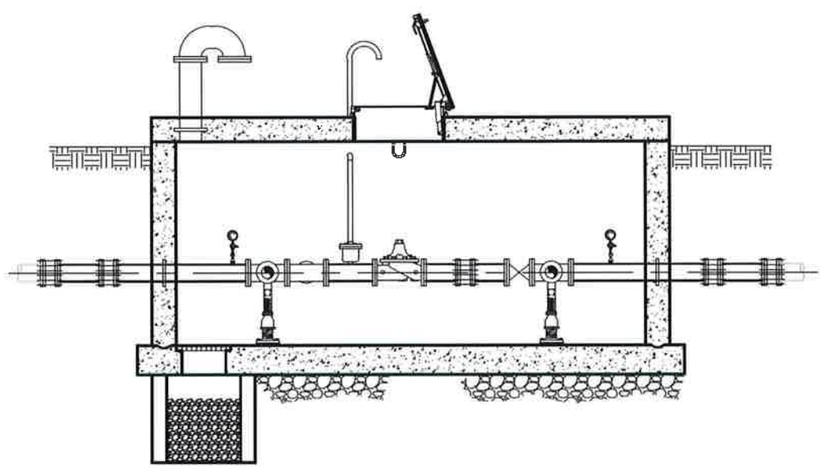

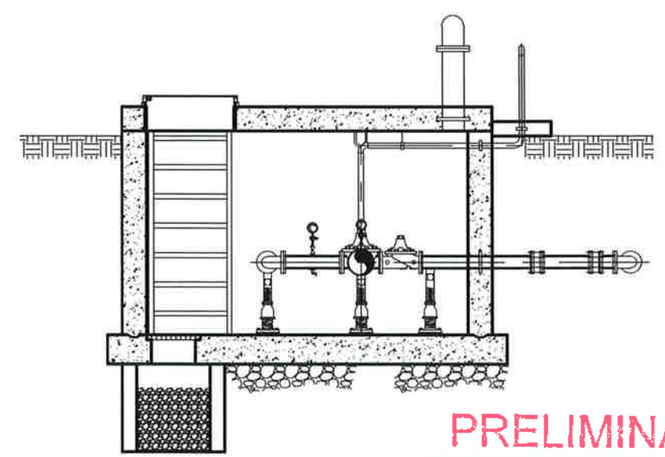

PRELIMINARY
SUBJECT TO REVISIONS

| | |
|---|---|
| A1 | TYPICAL VAULT DETAILS |
| NTS | |

Jones & DeMille Engineering, Inc.
CIVIL ENGINEERING - SURVEYING - TESTING
GIS - ENVIRONMENTAL
1.800.748.5275 www.jonesanddemille.com

DESIGN: DATE
DRAWN: KJ 09-16 CHECK: DATE
PLANT CHECK: BY
APPROVAL RECOMM: DATE PROJECT OR SR.ENGINEER
APPROVED DATE

| NO. | DATE | DESIGN REVISION | DRAWN CORRECTION | PROJECT ENGINEER APPROVAL |
|---|---|---|---|---|
| | | | | |

REMARKS
ORIGINAL SUBMISSION FOR AUTHORIZATION
REVISIONS

SCALE: VARIES
DWG NAME: DETAILS_PIPE
SHT SIZE: ANSI
DWG CREATED: 08/06/2016
UPDATED: 9/21/2016
PLOTTED: 9/21/2016
PEN TBL: —

INTERWEST MINING COMPANY
DEER CRK MINE WTR RELIEF PIPE
DETAILS
PROJECT NUMBER: 1506-121

EMERY
COUNTY

SHEET NO. DT-11

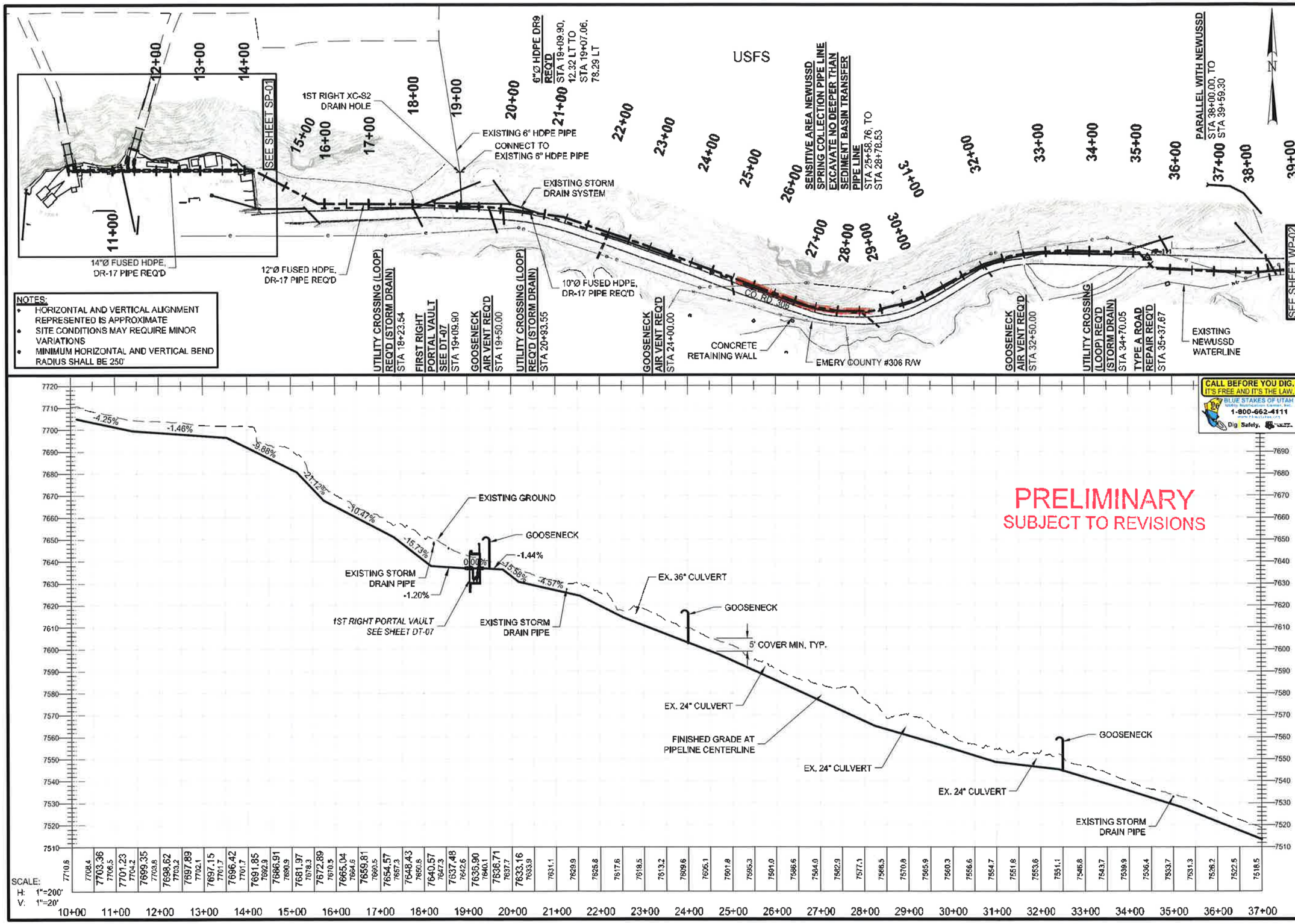


Jones & DeMille Engineering, Inc.
CIVIL ENGINEERING - SURVEYING - TESTING
GIS - ENVIRONMENTAL
1.800.748.5275 www.jonesanddemille.com

| NO. | DATE | REVISIONS | REMARKS |
|---|---|---|---|
| | | ORIGINAL SUBMISSION FOR AUTHORIZATION. | |

SCALE: 1" = 200'
DWG NAME: WP-01
SHT SET: 1506-121F
DWG CREATED: 2016/09/21
PEN TBL: _temp/ctb/300.ctb
UPDATED: 9/21/2016
PLOTTED: 9/21/2016

| | | | |
|---|---|---|---|
| DESIGN: JA 15-10 | CHECK: CF 15-10 | REVIEW | |
| DRAWN: KJ 16-05 | CHECK: BB 15-10 | DATE: | |
| QUANT: JA 15-10 | CHECK: CF 15-10 | BY: | |

PROJECT DESIGN ENGINEER: DATE
APPROVAL RECOMM: DATE
APPROVED: DATE

INTERWEST MINING COMPANY
DEER CRK MINE WTR RELIEF PIPE
WATER PLAN & PROFILE SHEET
PROJECT NUMBER: 1506-121
EMERY COUNTY
SHEET NO. WP-01

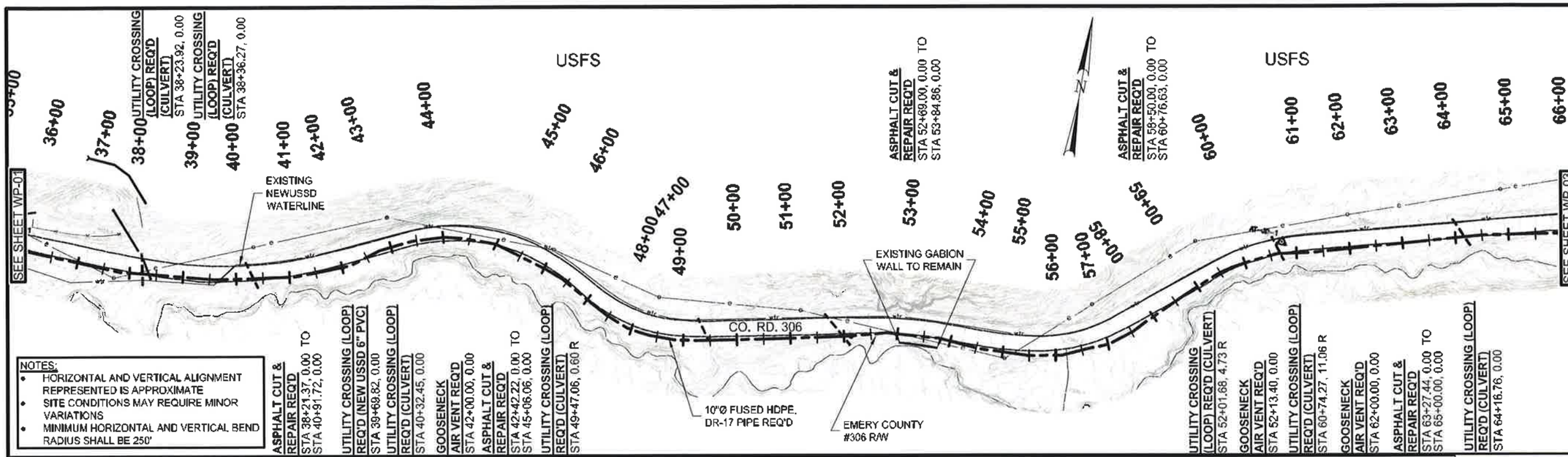


NOTES:
- HORIZONTAL AND VERTICAL ALIGNMENT REPRESENTED IS APPROXIMATE
- SITE CONDITIONS MAY REQUIRE MINOR VARIATIONS
- MINIMUM HORIZONTAL AND VERTICAL BEND RADIUS SHALL BE 250'

CALL BEFORE YOU DIG. IT'S FREE AND IT'S THE LAW
BLUE STAKES OF UTAH
1-800-662-4111
Dig Safely.

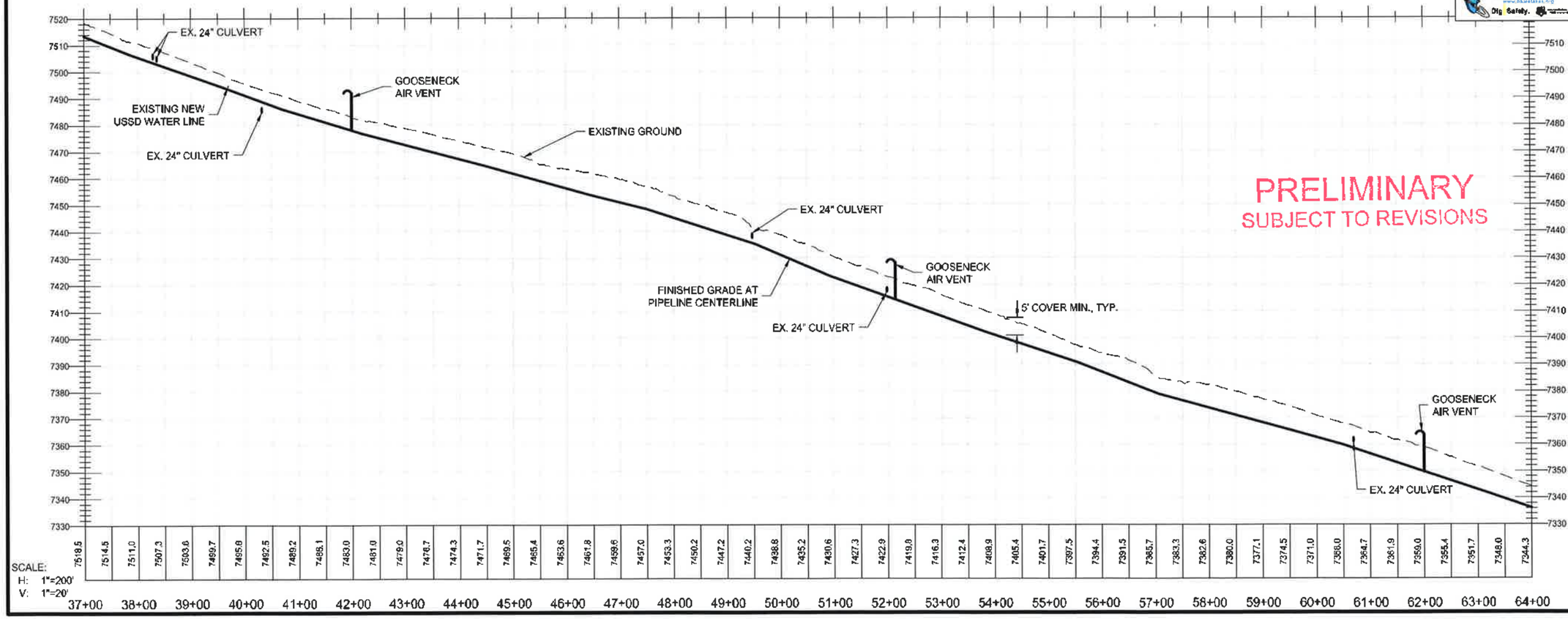


SCALE:
H: 1"=200'
V: 1"=20'

| NO. | DATE | REVISIONS | BY |
|---|---|---|---|
| | | | |

ORIGINAL SUBMISSION FOR AUTHORIZATION

SCALE 1" = 200'
DWG NAME WP-02
SHT SET 1506-121P
DWG CREATED: 2016/05/31
PEN TBL
UPDATED 9/21/2016
PLOTTED 9/21/2016

Jones & DeMille Engineering, Inc.
CIVIL ENGINEERING - SURVEYING - TESTING
GIS - ENVIRONMENTAL
1.800.748.5275 www.jonesanddemille.com

| | | | |
|---|---|---|---|
| DESIGN | JA | 15-10 | CHECK: CF 15-10 |
| DRAWN | KJ | 16-05 | CHECK: BB 15-10 |
| QUANT. | JA | 15-10 | CHECK: CF 15-10 |

REVIEW
DATE:
BY:

PROJECT DESIGN ENGINEER
DATE
APPROVAL RECOMM.
APPROVED
DATE

INTERWEST MINING COMPANY
DEER CRK MINE WTR RELIEF PIPE
WATER PLAN & PROFILE SHEET
PROJECT NUMBER: 1506-121
EMERY COUNTY
SHEET NO. WP-02

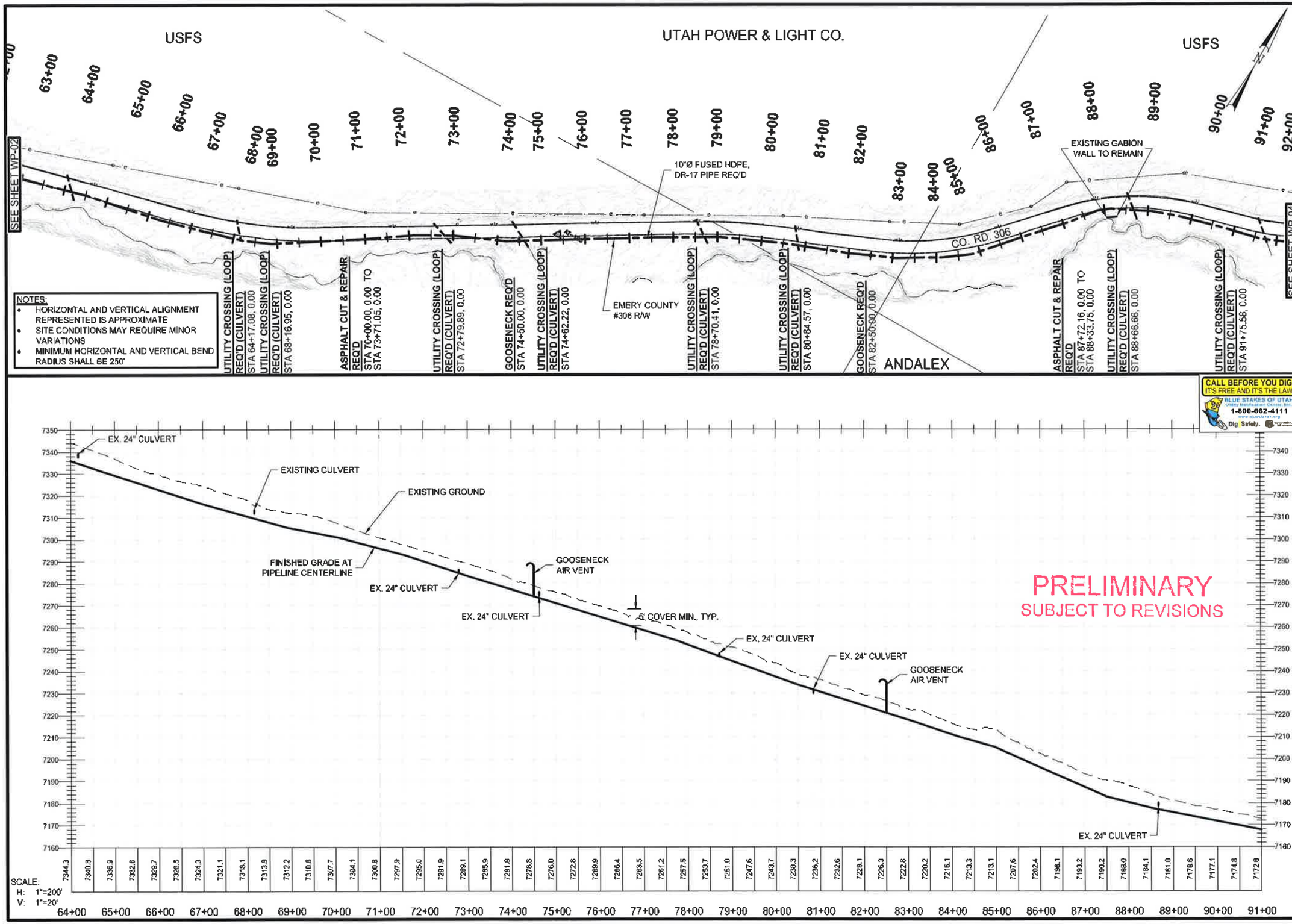


Jones & DeMille Engineering, Inc.
CIVIL ENGINEERING - SURVEYING - TESTING
GIS - ENVIRONMENTAL
1.800.748.5275 www.jonesandmille.com

| NO. | DATE | REVISION BY CORR. BY | REMARKS |
|---|---|---|---|
| | | ORIGINAL SUBMISSION FOR AUTHORIZATION | |

REVISIONS

DWG CREATED: 2016/05/31 UPDATED 9/21/2016
PLOTTED 9/21/2016
PEN TBL. _acad-ctb

SCALE 1" = 200'
DWG NAME WP-03
SHT SET 1506-1TYP

| | | | |
|---|---|---|---|
| DESIGN | JA | 15-10 | CHECK: CF 15-10 |
| DRAWN | TT | 16-05 | CHECK: BB 15-10 |
| COMP. | JA | 15-10 | CHECK: CF 15-10 |

REVIEW
DATE:
BY:

PROJECT DESIGN ENGINEER
DATE
APPROVAL RECOMM.
APPROVED
DATE

INTERWEST MINING COMPANY
DEER CRK MINE WTR RELIEF PIPE
WATER PLAN & PROFILE SHEET
PROJECT NUMBER: 1506-121
EMERY COUNTY
SHEET NO. WP-03

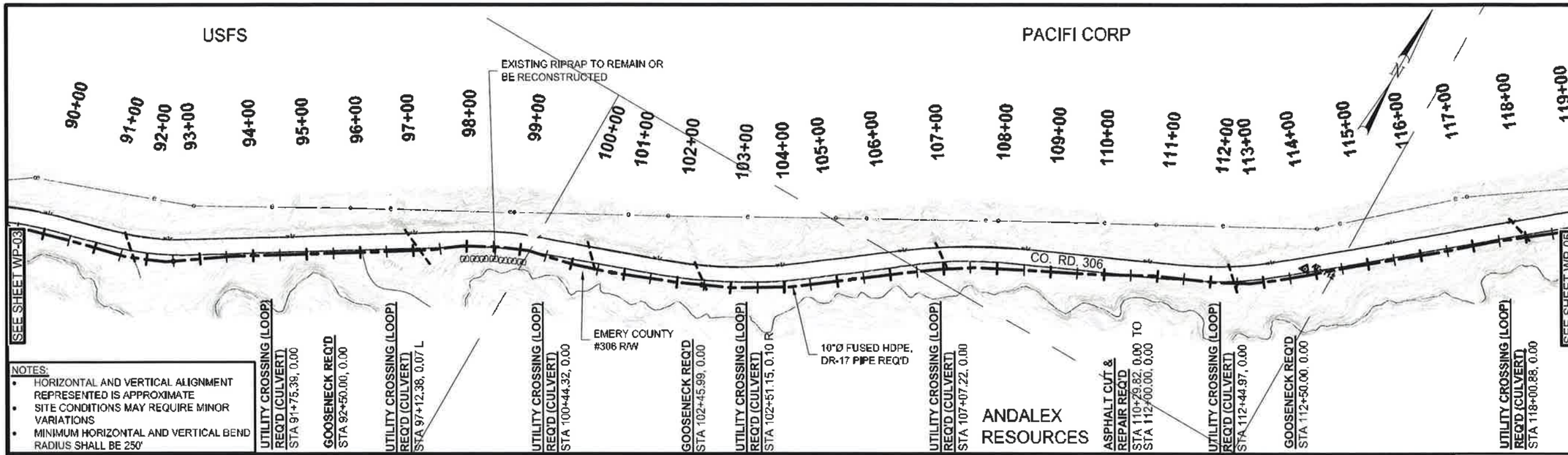


NOTES:
- HORIZONTAL AND VERTICAL ALIGNMENT REPRESENTED IS APPROXIMATE
- SITE CONDITIONS MAY REQUIRE MINOR VARIATIONS
- MINIMUM HORIZONTAL AND VERTICAL BEND RADIUS SHALL BE 250'

CALL BEFORE YOU DIG. IT'S FREE AND IT'S THE LAW.
BLUE STAKES OF UTAH
Utility Notification Center, Inc.
1-800-662-4111
www.bluestakes.org
Dig Safely.

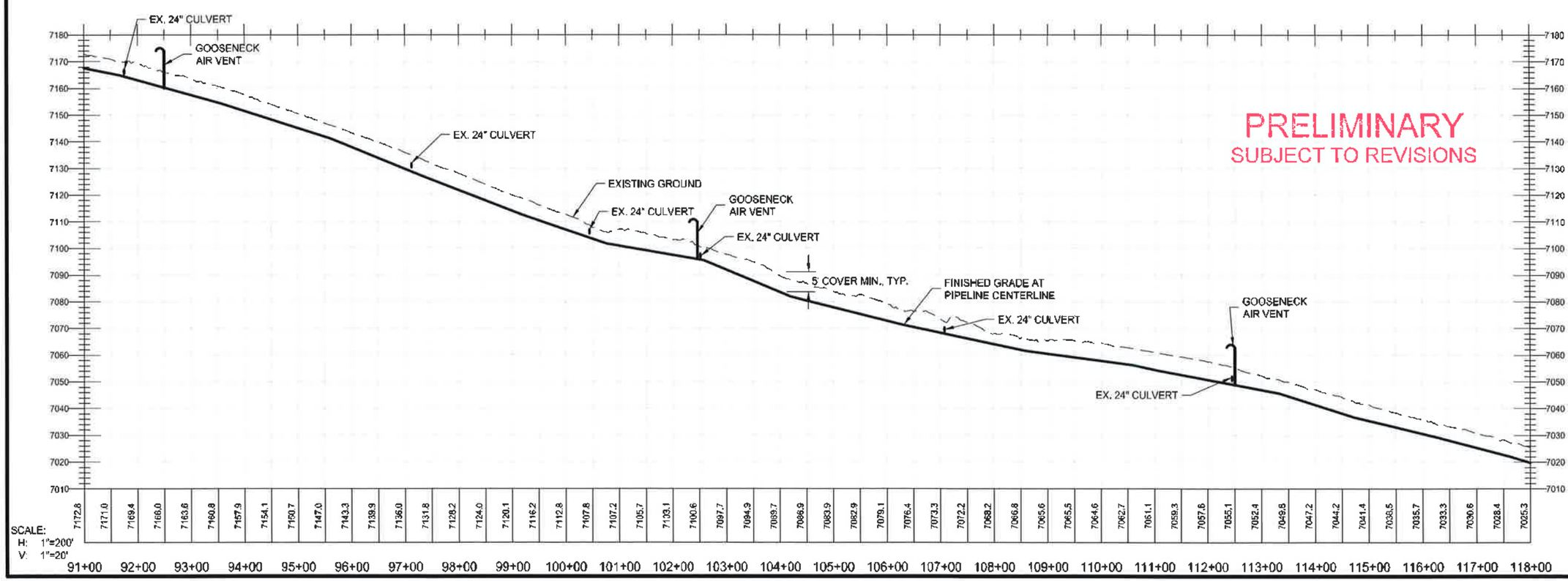


Jones & DeMille Engineering, Inc.
CIVIL ENGINEERING - SURVEYING - TESTING
GIS - ENVIRONMENTAL
1.800.748.5275 www.jonesanddemille.com

| | | | |
|---|---|---|---|
| DESIGN | JA | 15-10 | CHECK: CF 15-10 |
| DRAWN | TT | 16-05 | CHECK: BB 15-10 |
| QUALIT. | JA | 15-10 | CHECK: CF 15-10 |

REVIEW
DATE:
BY:

| NO. | DATE | REVISIONS | REMARKS |
|---|---|---|---|
| | | | |

ORIGINAL SUBMISSION FOR AUTHORIZATION.

SCALE 1" = 200'
DWG NAME WP-04
SHT SET 1506-121P
DWG CREATED: 2016/05/31
HEN IBL
UPDATED 9/21/2016
PLOTTED 9/21/2016

APPROVAL RECOMM. DATE PROJECT DESIGN ENGINEER
APPROVED DATE

INTERWEST MINING COMPANY
DEER CRK MINE WTR RELIEF PIPE
WATER PLAN & PROFILE SHEET
PROJECT NUMBER: 1506-121
EMERY COUNTY
SHEET NO. WP-04

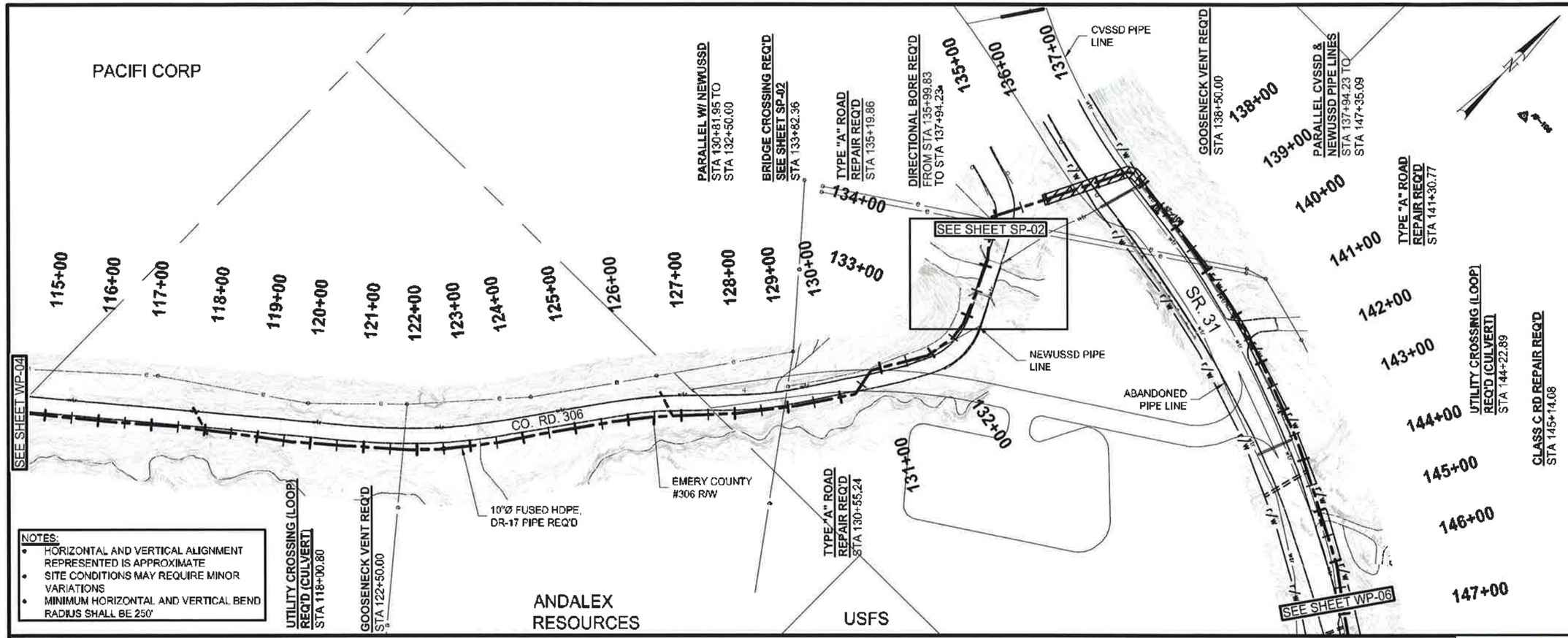


NOTES:

- HORIZONTAL AND VERTICAL ALIGNMENT REPRESENTED IS APPROXIMATE
- SITE CONDITIONS MAY REQUIRE MINOR VARIATIONS
- MINIMUM HORIZONTAL AND VERTICAL BEND RADIUS SHALL BE 250'

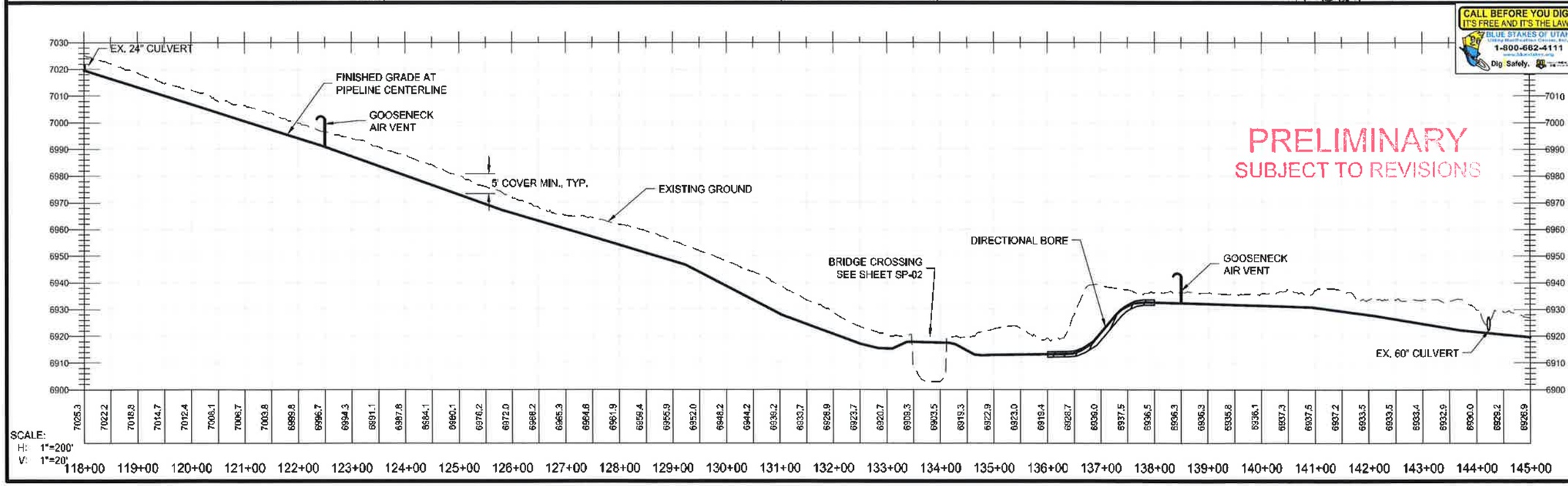


Jones & DeMille Engineering, Inc.
CIVIL ENGINEERING - SURVEYING - TESTING
GIS - ENVIRONMENTAL
1.800.748.5275 www.jonesanddemille.com

| NO. | DATE | REMARKS |
|---|---|---|
| | | ORIGINAL SUBMISSION FOR AUTHORIZATION |

REVISIONS

SCALE: 1" = 200'
DWG NAME: WP-05
SHT SIZE: 1530x791P
DWG CREATED: 2016/09/01
PEN TBL: _Inter4E2600.ctb
UPDATED: 9/21/2016
PLOTTED: 9/21/2016

| | | | |
|---|---|---|---|
| DESIGN: JA 15-10 | CHECK: CF 15-10 | REVIEW | |
| DRAWN: TT 16-05 | CHECK: BB 15-10 | DATE: | |
| QUANT: JA 15-10 | CHECK: CF 15-10 | BY: | |

APPROVAL RECOMM. DATE
PROJECT DESIGN ENGINEER
APPROVED DATE

INTERWEST MINING COMPANY
DEER CRK MINE WTR RELIEF PIPE
WATER PLAN & PROFILE SHEET
PROJECT NUMBER: 1506-121

EMERY COUNTY

SHEET NO. WP-05

NOTES:
- HORIZONTAL AND VERTICAL ALIGNMENT REPRESENTED IS APPROXIMATE
- SITE CONDITIONS MAY REQUIRE MINOR VARIATIONS
- MINIMUM HORIZONTAL AND VERTICAL BEND RADIUS SHALL BE 250'

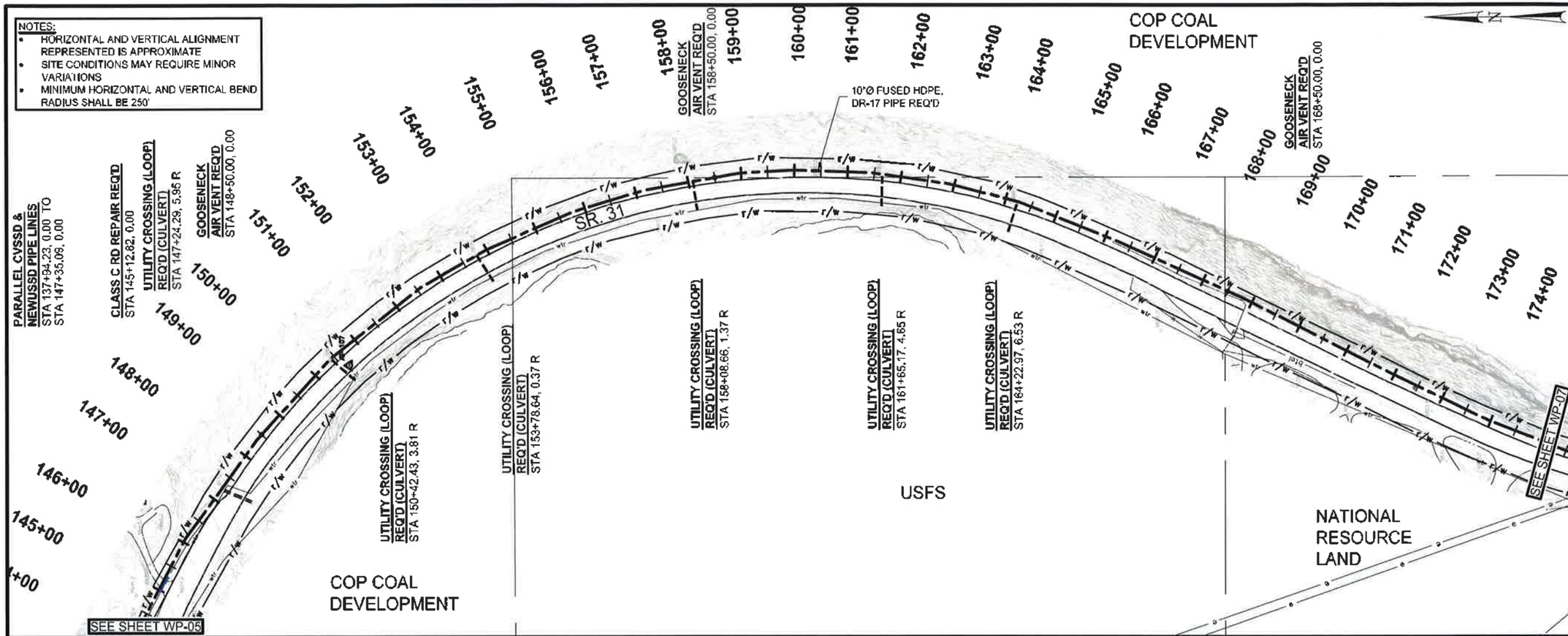


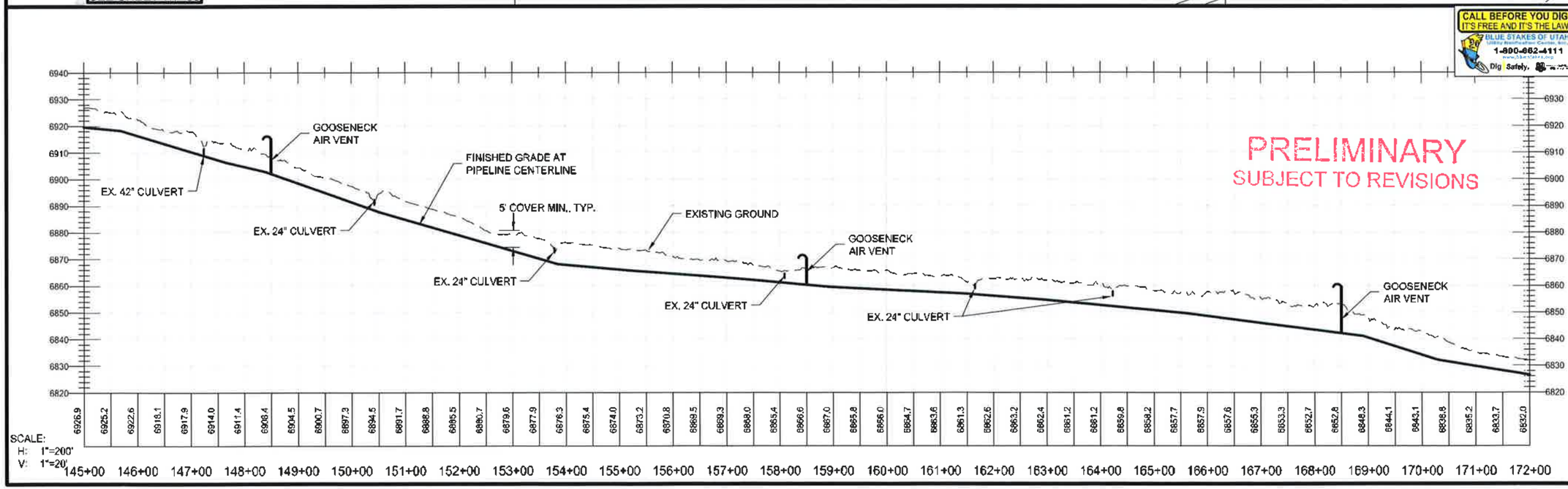


Jones & DeMille Engineering, Inc.
CIVIL ENGINEERING - SURVEYING - GIS - ENVIRONMENTAL TESTING
1.800.748.5275 www.jonesanddemille.com

| NO. | DATE | REVISION | INITIALS | CHECKED BY | PROJECT ENGINEER | REQUEST ACCEPTED BY | REMARKS |
|---|---|---|---|---|---|---|---|
| | | ORIGINAL SUBMISSION FOR AUTHORIZATION | | | | | |

REVISIONS

SCALE: 1" = 200'
DWG NAME: wp06
SHT SEL: 1-5,6-13P
DWG CREATED: 2016/05/31
PEN TBL: _jmcc-4-2000.ctb
UPDATED: 9/21/2016
PLOTTED: 9/21/2016

| | | | |
|---|---|---|---|
| DESIGN: | JA | 15-10 | REVIEW |
| DRAWN: | TT | 16-05 | DATE: |
| CHECK: | BB | 15-10 | DATE: |
| CHECK: | CF | 15-10 | DATE: |
| D.MAT: | JA | 15-10 | By: |

APPROVAL RECOMM. DATE
PROJECT DESIGN ENGINEER
APPROVED DATE

INTERWEST MINING COMPANY
DEER CRK MINE WTR RELIEF PIPE
WATER PLAN & PROFILE SHEET
PROJECT NUMBER 1506-121

EMERY COUNTY

SHEET NO. WP-06

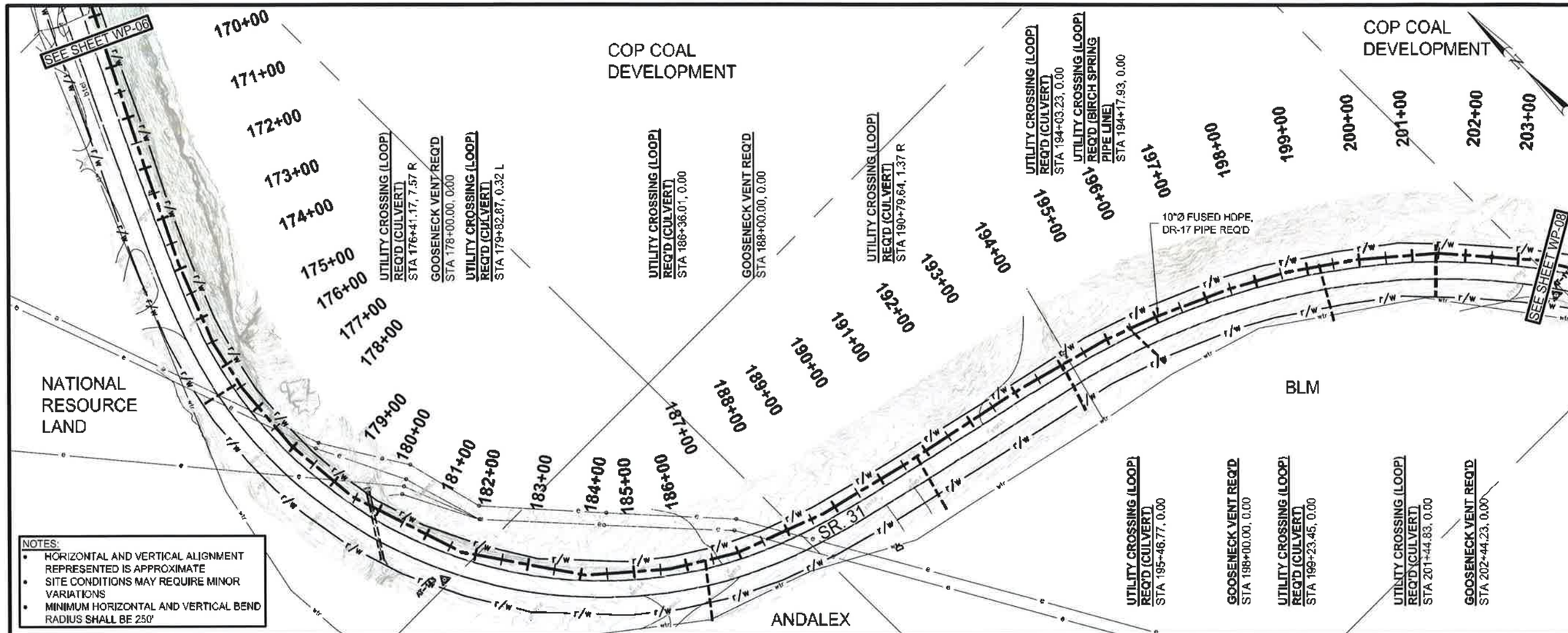


NOTES:
- HORIZONTAL AND VERTICAL ALIGNMENT REPRESENTED IS APPROXIMATE
- SITE CONDITIONS MAY REQUIRE MINOR VARIATIONS
- MINIMUM HORIZONTAL AND VERTICAL BEND RADIUS SHALL BE 250'

CALL BEFORE YOU DIG. IT'S FREE AND IT'S THE LAW.
BLUE STAKES OF UTAH
1-800-662-4111
Dig Safely.

PRELIMINARY
SUBJECT TO REVISIONS

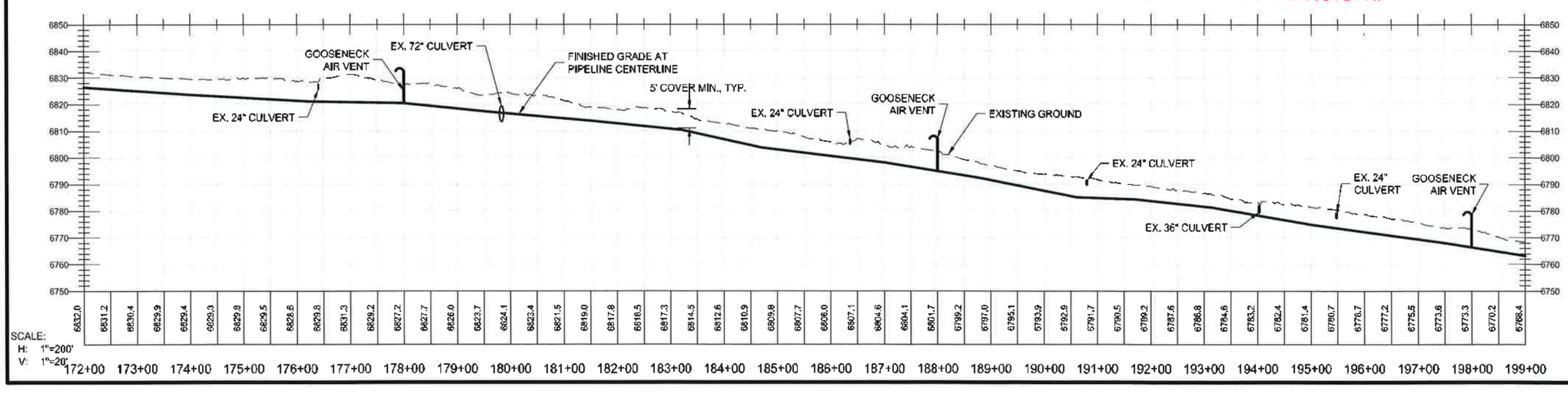


SCALE:
H: 1"=200'
V: 1"=20'

Jones & DeMille Engineering, Inc.
CIVIL ENGINEERING - SURVEYING - TESTING
GIS - ENVIRONMENTAL
1.800.748.5275 www.jonesanddemille.com

| | | | | |
|---|---|---|---|---|
| DESIGN: | JA | 15-10 | CHECK: | CF 15-10 |
| DRAWN: | TT | 16-05 | CHECK: | BB 15-10 |
| SUBMIT: | JA | 15-10 | CHECK: | CF 15-10 |

REVIEW
DATE:
BY:

| NO. | DATE | REVISIONS | BY | REMARKS |
|---|---|---|---|---|
| | | ORIGINAL SUBMISSION FOR AUTHORIZATION | | |

SCALE: 1" = 200'
DWG NAME: WP-07
SHT SET: 1506-121P
DWG CREATED: 2016/05/31
PLOT BY: _jacob/4/2016.dwg
UPDATED: 9/21/2016
PLOTTED: 9/21/2016

APPROVAL RECOMM: DATE
PROJECT DESIGN ENGINEER
APPROVED: DATE

INTERWEST MINING COMPANY
DEER CRK MINE WTR RELIEF PIPE
WATER PLAN & PROFILE SHEET
PROJECT NUMBER 1506-121
EMERY COUNTY
SHEET NO. WP-07

NOTES:
- HORIZONTAL AND VERTICAL ALIGNMENT REPRESENTED IS APPROXIMATE
- SITE CONDITIONS MAY REQUIRE MINOR VARIATIONS
- MINIMUM HORIZONTAL AND VERTICAL BEND RADIUS SHALL BE 250'

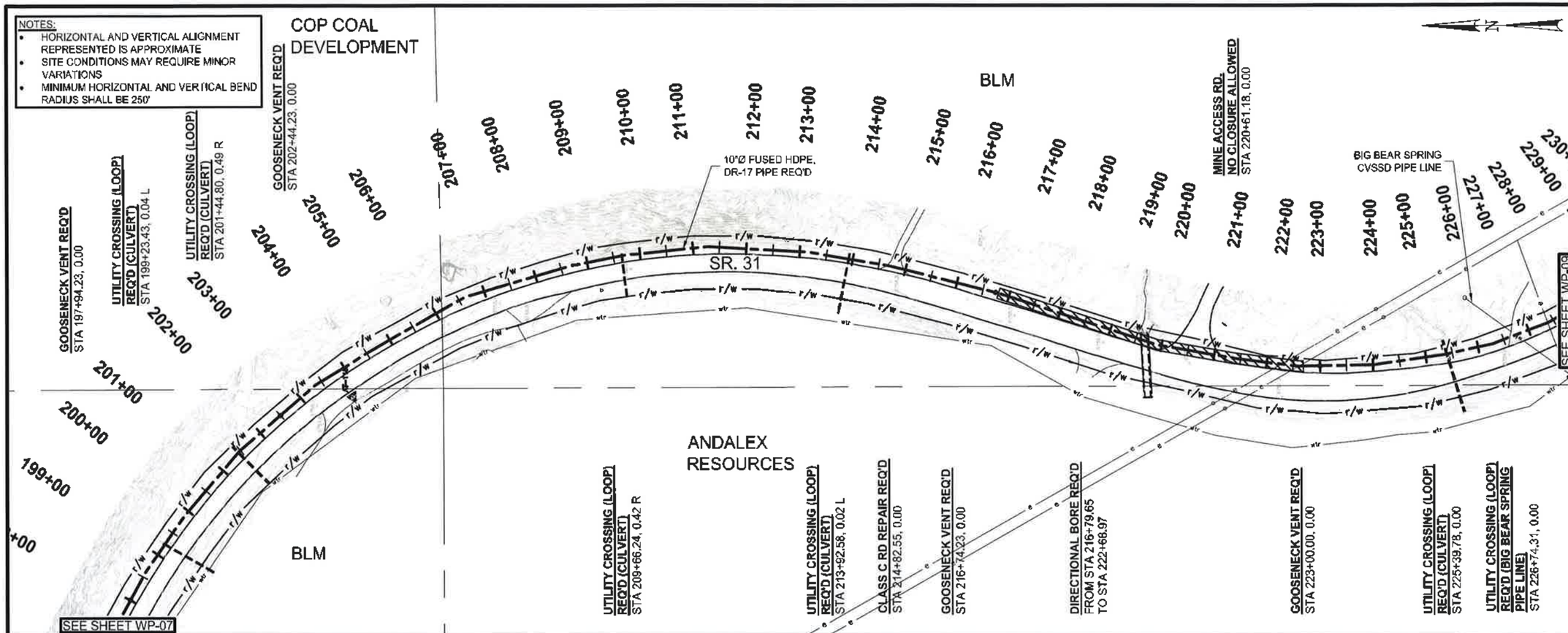


PRELIMINARY
SUBJECT TO REVISIONS

CALL BEFORE YOU DIG. IT'S FREE AND IT'S THE LAW. BLUE STAKES OF UTAH 1-800-662-4111 Dig Safely.

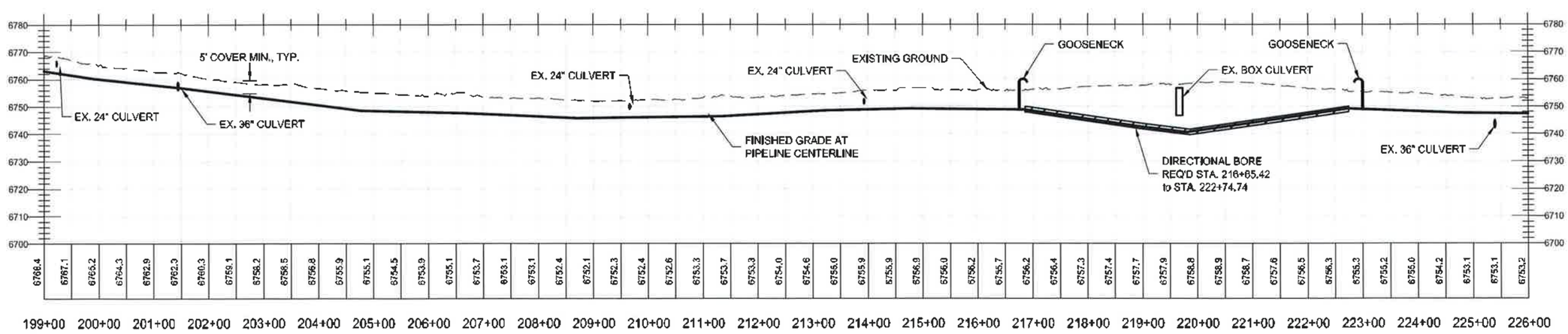


SCALE:
H: 1"=200'
V: 1"=20'

| NO. | DATE | REVISIONS | BY | CHECKED BY |
|---|---|---|---|---|
| | | ORIGINAL SUBMISSION FOR AUTHORIZATION | | |

REMARKS

SCALE 1" = 200'
DWG NAME: wp-08
SHT SET: 1506-121P
DWG CREATED: 2016/05/31
PLN TBL: _specs-sheet.ctb
UPDATED: 9/21/2016
PLOTTED: 9/21/2016

Jones & DeMille Engineering, Inc.
CIVIL ENGINEERING - SURVEYING - TESTING
GIS - ENVIRONMENTAL
1.800.746.5275 www.jonesanddemille.com

| | | | |
|---|---|---|---|
| DESIGN: JA 15-10 | CHECK: CF 15-10 | REVIEW | |
| DRAWN: TT 16-05 | CHECK: BB 15-10 | DATE: | |
| CHART: JA 15-10 | CHECK: CF 15-10 | BY | |

APPROVAL RECOMM. DATE PROJECT ENGINEER
APPROVED DATE

INTERWEST MINING COMPANY
DEER CRK MINE WTR RELIEF PIPE
WATER PLAN & PROFILE SHEET
PROJECT NUMBER: 1506-121
EMERY COUNTY
SHEET NO. WP-08

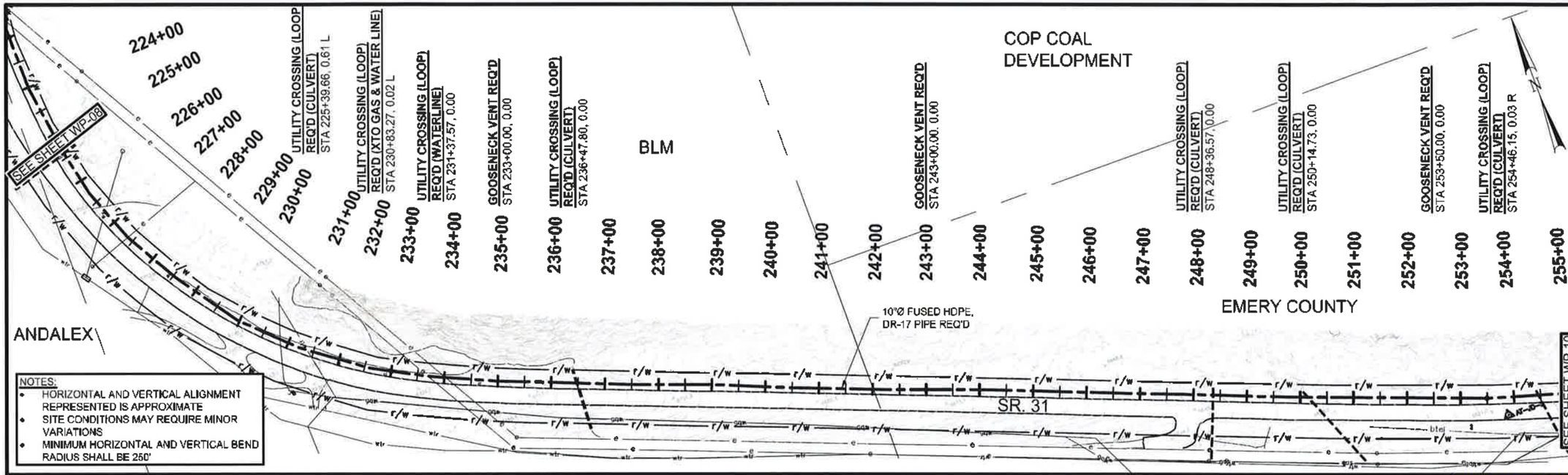


CALL BEFORE YOU DIG.
IT'S FREE AND IT'S THE LAW.
BLUE STAKES OF UTAH
1-800-662-4111
Dig Safely.

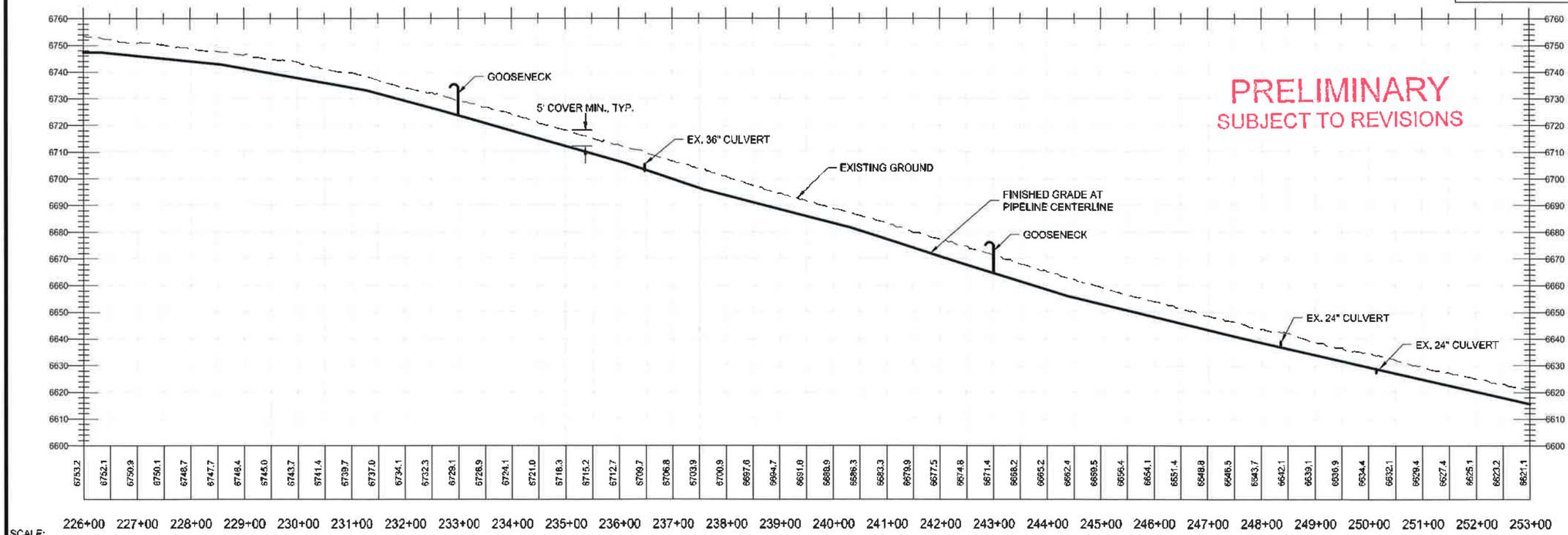


SCALE:
H: 1"=200'
V: 1"=20'

| NO. | DATE | REVISIONS | REMARKS |
|---|---|---|---|
| | | ORIGINAL SUBMISSION FOR AUTHORIZATION | |

| | | | |
|---|---|---|---|
| DESIGN | JA | 15-10 | REVIEW |
| DRAWN | TT | 16-05 | DATE: |
| DRAWN | JA | 15-10 | DATE: |

SCALE: 1" = 200'
DWG NAME: WP-09
SHT SET: 1506-121P
DWG CREATED: 2016/05/31
PEN FILE: _1506-121P.tbl
UPDATED: 8/21/2016
PLOTTED: 8/21/2016

Jones & DeMille Engineering, Inc.
CIVIL ENGINEERING - SURVEYING - TESTING
GIS - ENVIRONMENTAL
1.800.748.5275 www.jonesanddemille.com

APPROVAL RECOMM: DATE
PROJECT DESIGN ENGINEER
APPROVED DATE

INTERWEST MINING COMPANY
DEER CRK MINE WTR RELIEF PIPE
WATER PLAN & PROFILE SHEET
PROJECT NUMBER 1506-121
EMERY COUNTY
SHEET NO. WP-09

NOTES:
- HORIZONTAL AND VERTICAL ALIGNMENT REPRESENTED IS APPROXIMATE
- SITE CONDITIONS MAY REQUIRE MINOR VARIATIONS
- MINIMUM HORIZONTAL AND VERTICAL BEND RADIUS SHALL BE 250'

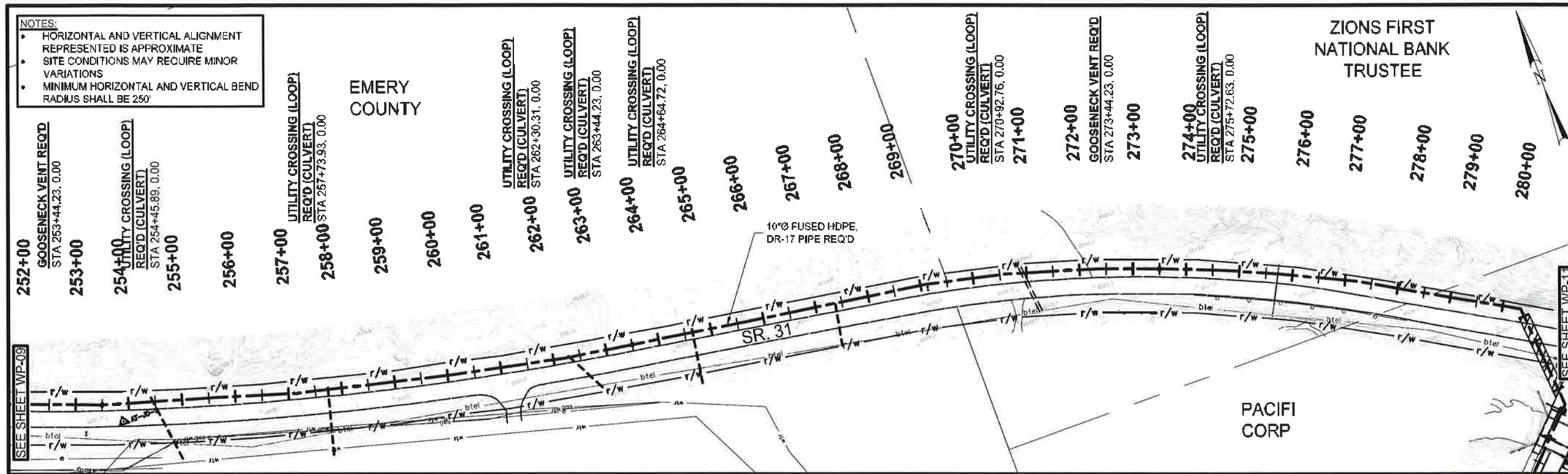


CALL BEFORE YOU DIG. IT'S FREE AND IT'S THE LAW.
BLUE STAKES OF UTAH
1-800-662-4111
Dig Safely.

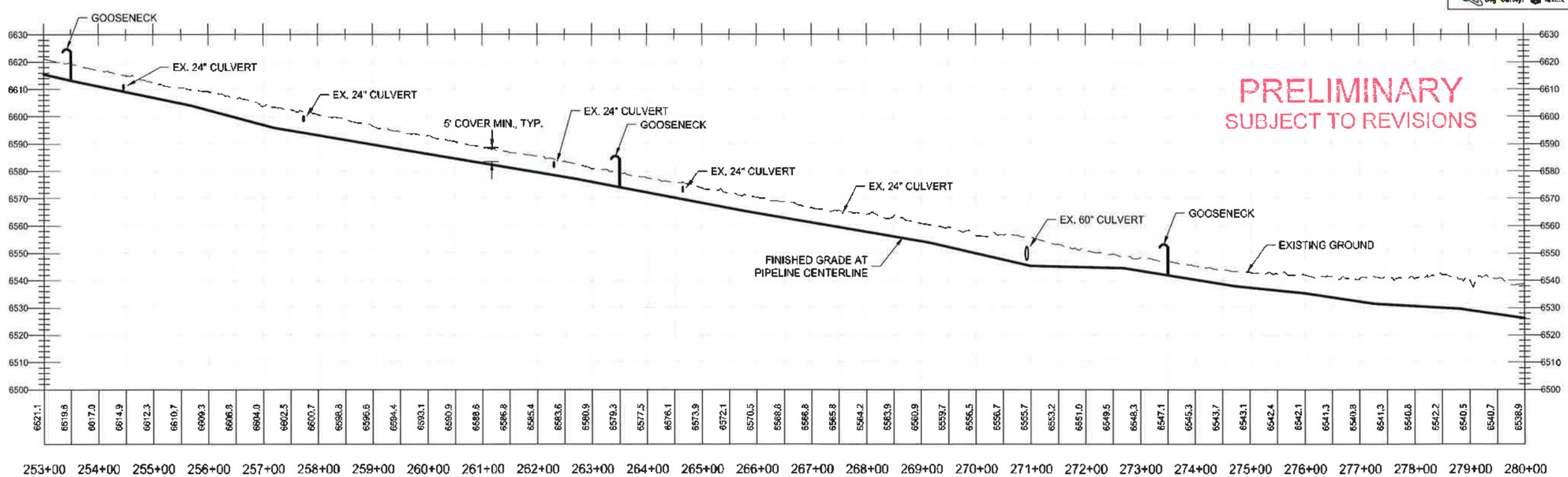


SCALE:
H: 1"=200'
V: 1"=20'

| NO. | DATE | REVISIONS | BY |
|---|---|---|---|
| | | ORIGINAL SUBMISSION FOR AUTHORIZATION. | |

REMARKS

SCALE 1" = 200'
DWG NAME WP-10
SHT SET 1506-121P
DWG CREATED 2016/09/31 UPDATED 9/21/2016
PEN TBL _tonzeb09001.ctb PLOTTED 9/21/2016

Jones & DeMille Engineering, Inc.
CIVIL ENGINEERING - SURVEYING - TESTING
GIS - ENVIRONMENTAL
1.800.748.5275 www.jonesandmille.com

DESIGN JA 15-10 CHECK CF 15-10 REVIEW
DRAWN TT 16-05 CHECK BB 15-10 DATE
QUANT. JA 15-10 CHECK CF 15-10 BY

PROJECT DESIGN ENGINEER DATE
APPROVAL RECOMM. DATE
APPROVED DATE

INTERWEST MINING COMPANY
DEER CRK MINE WTR RELIEF PIPE
WATER PLAN & PROFILE SHEET
PROJECT NUMBER: 1506-121
EMERY COUNTY
SHEET NO. WP-10

NOTES:
- HORIZONTAL AND VERTICAL ALIGNMENT REPRESENTED IS APPROXIMATE
- SITE CONDITIONS MAY REQUIRE MINOR VARIATIONS
- MINIMUM HORIZONTAL AND VERTICAL BEND RADIUS SHALL BE 250'

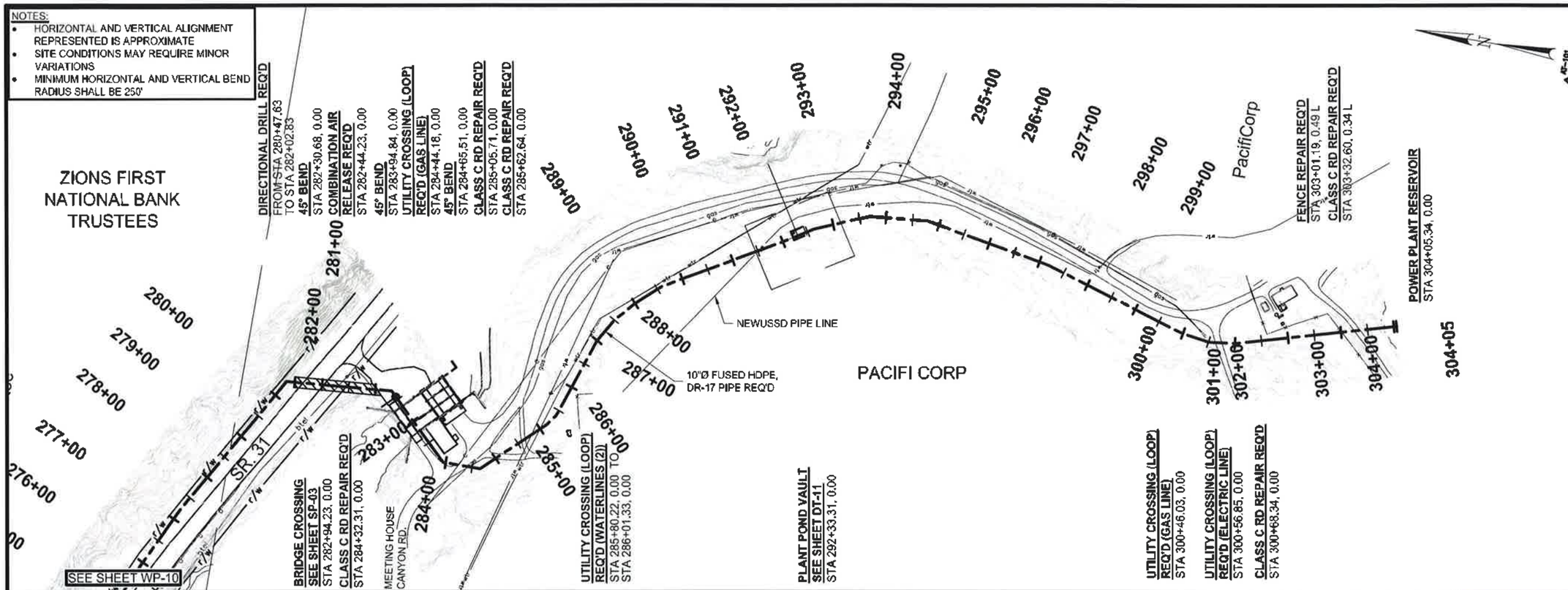


PRELIMINARY
SUBJECT TO REVISIONS

CALL BEFORE YOU DIG.
IT'S FREE AND IT'S THE LAW.
BLUE STAKES OF UTAH
Utility Notification Center, Inc.
1-800-662-4111
Dig Safely.

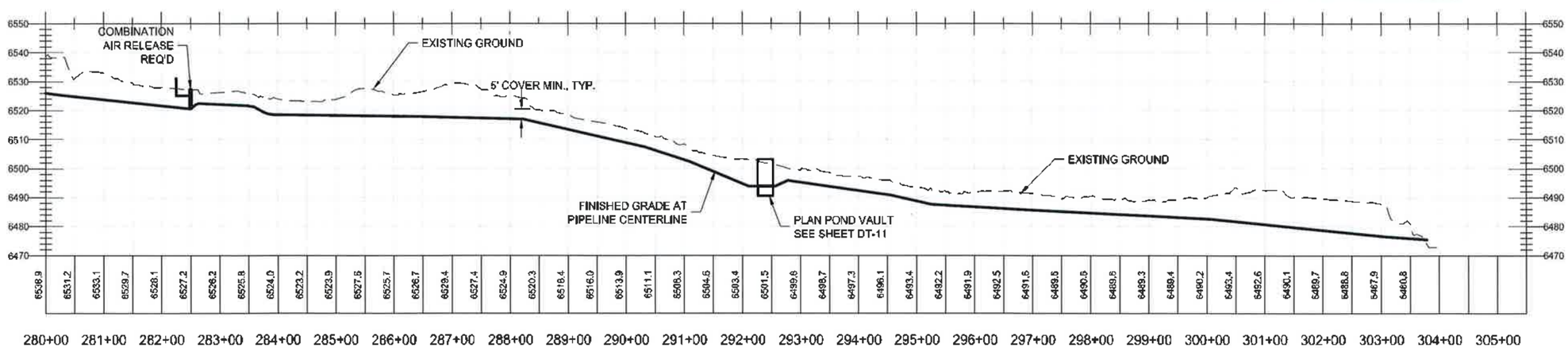


SCALE:
H: 1"=200'
V: 1"=20'

Jones & DeMille Engineering, Inc.
CIVIL ENGINEERING - SURVEYING - TESTING
GIS - ENVIRONMENTAL
1.800.748.5275 www.jonesanddemille.com

| REVISION | JA | 15-10 | CHECK: | CF | 15-10 | REVIEW |
|---|---|---|---|---|---|---|
| DRAWN | TT | 16-05 | CHECK: | BB | 15-10 | DATE: |
| PLANT | JA | 15-10 | CHECK: | CF | 15-10 | BY: |

| NO. | DATE | DESCRIPTION | BY | APPROVED | REVISIONS |
|---|---|---|---|---|---|
| | | ORIGINAL SUBMISSION FOR AUTHORIZATION | | | REMARKS |

SCALE 1" = 200'
DWG NAME WP-11
SHT SET 1506-DIP
DWG CREATED: 2016/05/31
PEN TBL _1506-DIP200.ctb
UPDATED: 9/21/2016
PLOTTED: 9/21/2016

APPROVAL RECOMM. DATE
PROJECT DESIGN ENGINEER
APPROVED DATE

INTERWEST MINING COMPANY
DEER CRK MINE WTR RELIEF PIPE
WATER PLAN & PROFILE SHEET
PROJECT NUMBER: 1506-121
EMERY COUNTY
SHEET NO. WP-11

100' 14"Ø DR9 HDPE PERFORATED PIPE BY OTHERS

100' 14"Ø DR9 HDPE PERFORATED PIPE BY OHTERS

25' CONCRETE BY OTHERS

25' BACKFILL BY OTHERS

14"Ø DR9 HDPE PIPE STUBBED OUT BY OTHERS

10+00

11+00

12+00

13+00

14+00

25' CONCRETE BY OTHERS

25' BACKFILL BY OTHERS

FUSED 14"Ø HDPE, DR9 PIPE CONNCETION REQ'D

14"Ø DR9 HDPE PIPE STUBBED OUT BY OTHERS

FUSED 14"Ø HDPE, DR9 PIPE CONNCETION REQ'D

90° BEND REQ'D

14"x14"x14" TEE REQ'D

14"Ø DR9 HDPE PIPE REQ'D

14"x14"x14" TEE REQ'D

14"Ø DR9 HDPE PIPE REQ'D

525' CONCRETE CUTTING REQ'D (APPROX 9" THICK w/ #6 REBAR @ 12" CC. BOTH WAYS.) CLASS C RD REPAIR REQ'D

SEE SHEET WP-01

7700.8

7709.4

PRELIMINARY
SUBJECT TO REVISIONS

CALL BEFORE YOU DIG, IT'S FREE AND IT'S THE LAW.
BLUE STAKES OF UTAH
1-800-662-4111
Dig Safely.

| NO. | DATE | REVISIONS | REMARKS |
|---|---|---|---|
| | | DESIGN REVIEW | DESIGN CHANGE |
| | | CADD BY | CADD CHANGE |
| | | CHECKED BY | CHECKED CHANGE |
| | | ORIGINAL SUBMISSION FOR AUTHORIZATION | |

SCALE: 1" = 40'

DWG NAME: SP-01_DPP2
SHT SET: 1506-121P

DWG CREATED: 2016/05/31
PEN TBL: _bpscpd-2020.ctb

UPDATED: 9/21/2016
PLOTTED: 9/21/2016

Jones & DeMille Engineering, Inc.
CIVIL ENGINEERING - SURVEYING - TESTING
GIS - ENVIRONMENTAL
1.800.748.5275 www.jonesanddemille.com

| | | | |
|---|---|---|---|
| DESIGN: | JA | 15-10 | CHECK: CF 15-10 |
| DRAWN: | TT | 16-05 | CHECK: BB 15-10 |
| QUANT: | JA | 15-10 | CHECK: CF 15-10 |

REVIEW
DATE:
BY:

APPROVAL RECOMM. DATE
PROJECT DESIGN ENGINEER
APPROVED DATE

INTERWEST MINING COMPANY
DEER CRK MINE WTR RELIEF PIPE
SITE PLAN
PROJECT NUMBER: 1506-121

EMERY
COUNTY

SHEET NO. SP-01

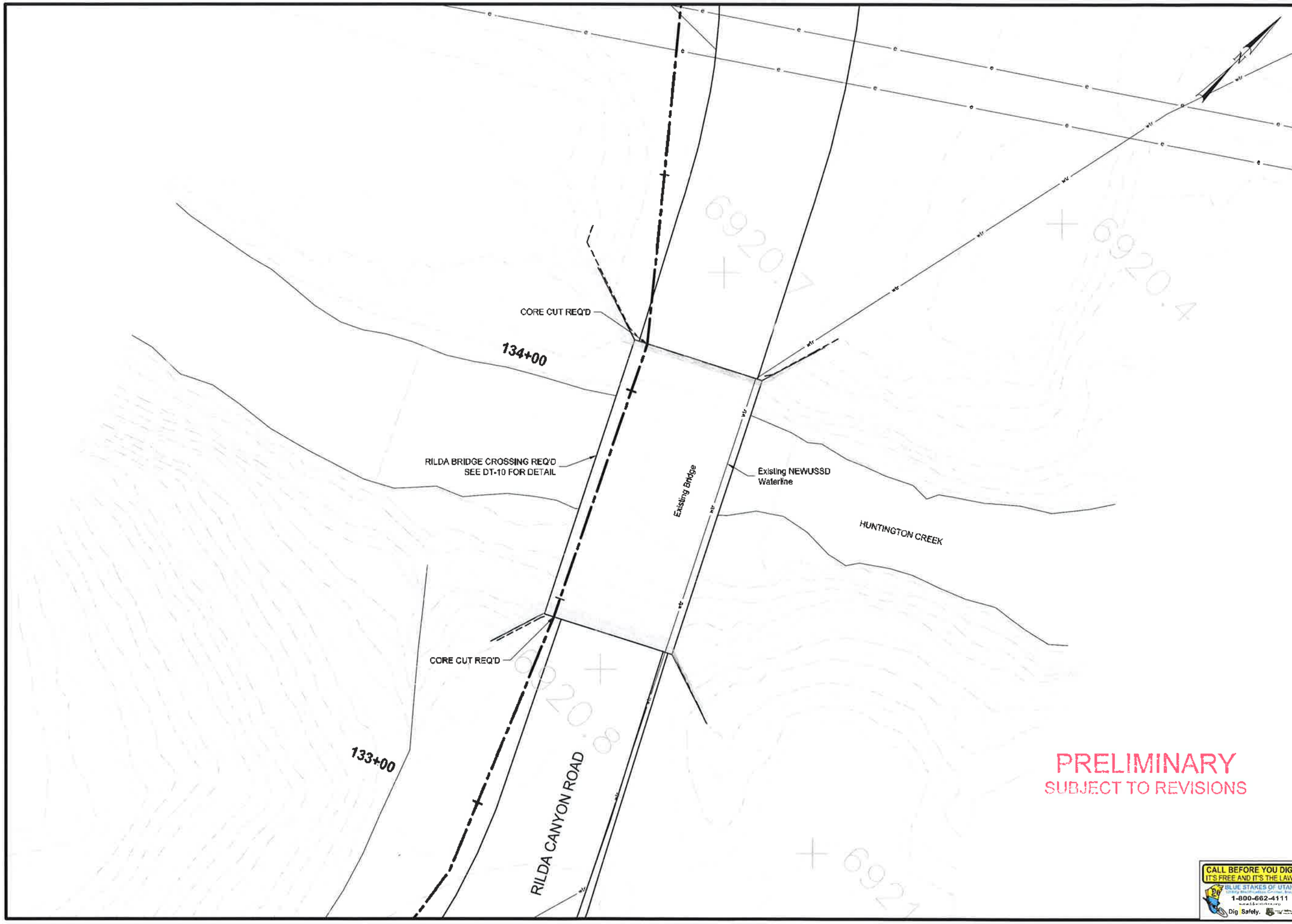


| NO. | DATE | DESIGN CHANGE | DRAWN CORRECTIONS | PARTIAL FIELD CHECK | FIELD CHECK |
|---|---|---|---|---|---|

REVISIONS

ORIGINAL SUBMISSION FOR AUTHORIZATION

REMARKS

SCALE 1" = 20'

DWG NAME SP-02.DWG

SHT SET 1506-12P

DWG CREATED: 2016/06/31

PEN TBL: JDM-B-2000.stb

UPDATED 9/13/2016

PLOTTED 9/21/2016

Jones & DeMille Engineering, Inc.
CIVIL ENGINEERING - SURVEYING - TESTING
GIS - ENVIRONMENTAL
1.800.748.5275 www.jonesanddemille.com

| | | | |
|---|---|---|---|
| DESIGN | JA | 15-10 | CHECK CF 15-10 |
| DRAWN | TT | 16-05 | CHECK BB 15-10 |
| QUALITY | JA | 15-10 | CHECK CF 15-10 |

REVIEW

DATE:

BY:

APPROVAL RECOMM. DATE PROJECT DESIGN ENGINEER

APPROVED DATE

INTERWEST MINING COMPANY

DEER CRK MINE WTR RELIEF PIPE

SITE PLAN

PROJECT NUMBER: 1506-121

EMERY
COUNTY

SHEET NO. SP-02

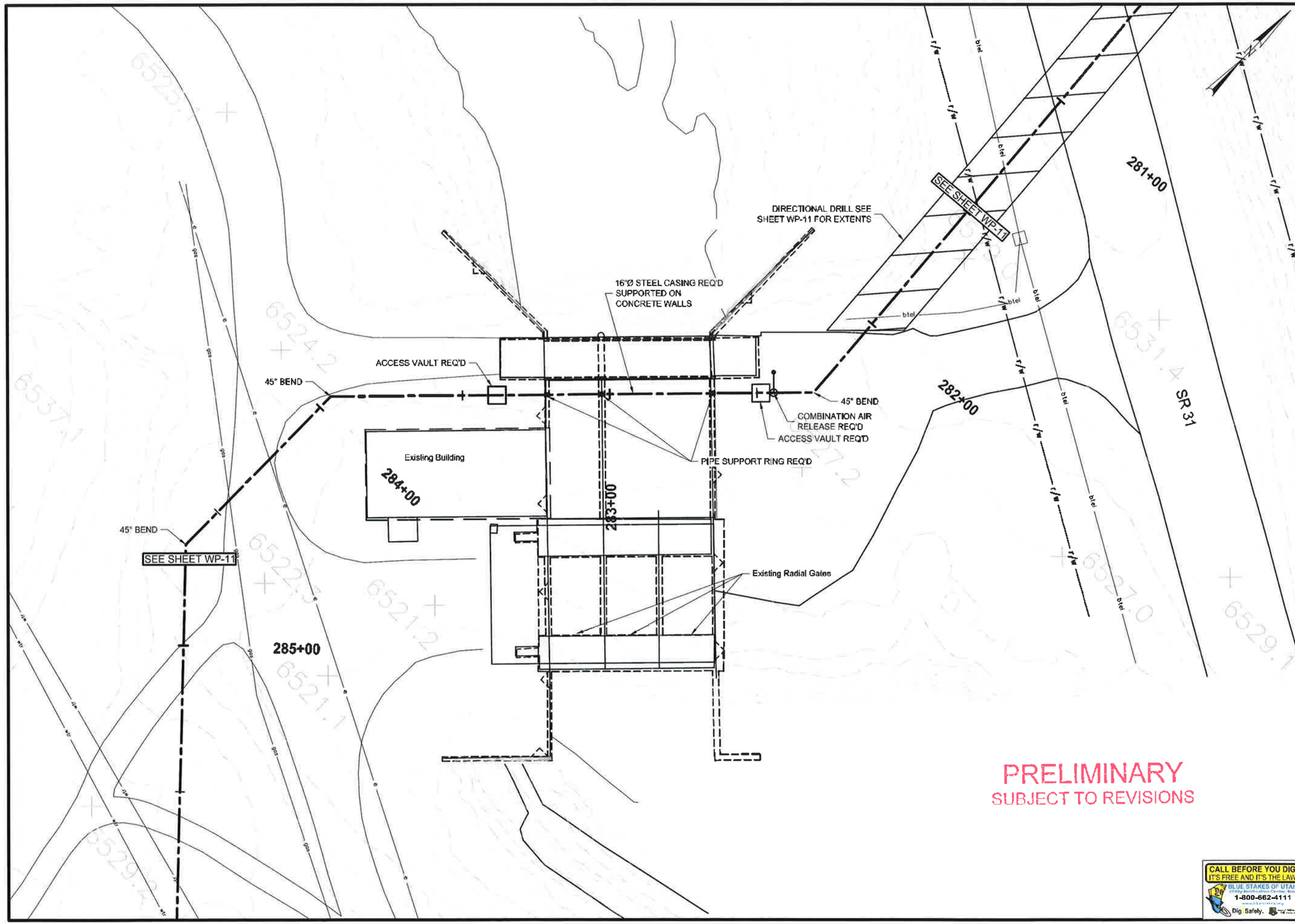


| NO. | DATE | REMARKS |
|---|---|---|
| | | ORIGINAL SUBMISSION FOR AUTHORIZATION |

REVISIONS

SCALE 1" = 30'

DWG NAME: SP-03_PIPE
SHT SET: 1506-121P

DWG CREATED: 2016/05/31
PEN TBL: _base-44-2008.ctb

UPDATED: 9/14/2016
PLOTTED: 9/21/2016

Jones & DeMille Engineering, Inc.
CIVIL ENGINEERING - SURVEYING - TESTING
GIS - ENVIRONMENTAL
1.800.748.5275 www.jonesandmille.com

| | | | |
|---|---|---|---|
| DESIGN: JA 15-10 | CHECK: CF 15-10 | REVIEW | |
| DRAWN: TT 16-05 | CHECK: BB 15-10 | DATE: | |
| D.MAT: JA 15-10 | CHECK: CF 15-10 | BY: | |

APPROVAL RECOMM. DATE PROJECT DESIGN ENGINEER

APPROVED DATE

INTERWEST MINING COMPANY

DEER CRK MINE WTR RELIEF PIPE

SITE PLAN

PROJECT NUMBER: 1506-121

EMERY COUNTY

SHEET NO. SP-03

## Attachment G. Draft Stormwater Pollution Prevention Plan (SWPPP)

# Stormwater Pollution Prevention Plan

# for:

Rilda Canyon to Huntington Pipeline
Rilda and Huntington Canyons
Emery County, Utah

# Operator(s):

Company
Name
Address
City, State, Zip
Phone
Email

DRAFT

# SWPPP Contact(s):

Company or Organization Name
Name
Address
City, State, Zip
Phone
Email

# SWPPP Preparation Date:

Date

# Contents

Section 1. Project Site Information ..... 1
1.1 Contact Information/Responsible Parties ..... 1
1.2 Project Location Information ..... 2
1.3 Receiving Waters ..... 3
1.4 Type of Construction Activity ..... 3
1.5 Construction Site Estimates ..... 3
1.6 Additional Site Characteristics ..... 4
1.7 Site Features and Sensitive Areas to be Protected ..... 4
1.8 Potential Sources of Pollution ..... 4
1.9 Endangered Species Certification ..... 4
1.10 Historic Preservation ..... 5
1.11 Applicable Federal, Tribal, State, or Local Programs ..... 5
Section 2. Erosion and Sediment Control BMPs ..... 5
2.1 Minimize Disturbed Area and Protect Natural Features and Soil ..... 5
2.2 Phase Construction Activity ..... 5
2.3 Allowable Non-Stormwater Discharge Management ..... 6
2.4 Control Stormwater Flowing onto and through the Project ..... 6
2.5 Stabilize Soils ..... 7
2.6 Protect Slopes ..... 8
2.7 Protect Storm Drain Inlets ..... 9
2.8 Establish Perimeter Controls and Sediment Barriers ..... 9
2.9 Retain Sediment On-site ..... 10
2.10 Establish Stabilized Construction Exits ..... 10
2.11 Additional BMPs ..... 11
Section 3. Good Housekeeping BMPs ..... 11
Section 4. Inspections ..... 11
4.1 Inspections ..... 11
4.1.1 Inspection Schedule and Procedures ..... 11
4.2 Delegation of Authority ..... 12
4.3 Corrective Action Log ..... 12

DRAFT

Section 5. Recordkeeping and Training ..... 13
5.1 Recordkeeping ..... 13
5.2 Log of Changes to the SWPPP ..... 13
5.3 Training ..... 13
Section 6. Final Stabilization ..... 13
Section 7. Certification and Notification ..... 14

## Appendices

Appendix A. Maps, Drawings, and BMP details
Appendix B. Construction General Permit
Appendix C. NOI and Acknowledgement Letter from State
Appendix D. Project Schedules
Appendix E. Spill Prevention and Response Plan
Appendix F. Grading and Stabilization Activities Log
Appendix G. Inspection Reports
Appendix H. Corrective Action Log
Appendix I. SWPPP Amendment Log
Appendix J. Subcontractor Certifications/Agreements
Appendix K. Training Log
Appendix L. Delegation of Authority
Appendix M. Additional Information

DRAFT

# Section 1. Project Site Information

## 1.1 Contact Information/Responsible Parties

**Owner:**

Interwest Mining Company
Name
Address
Address
Phone
Email

**Operator(s):**

Company
Name
Address
City, State, Zip
Phone
Email
Area of control (if more than one operator at site)
Repeat as necessary

**SWPPP Contact(s):**

Company
Name
Address
City, State, Zip
Phone
Email
Area of control (if more than one operator at site)
Repeat as necessary

**This SWPPP was prepared by:**

Jones and DeMille Engineering
Jenna Jorgensen
1535 S. 100 W.
Richfield, UT 84701
(435) 893-5203
Jenna.j@jonesanddemille.com

DRAFT

**Subcontractor(s):**

Company or Organization Name
Name
Address
City, State, Zip
Telephone
Email/Fax
Area of control (if more than one operator at site)
Repeat as necessary

**Emergency 24-Hour Contact:**

Company or Organization Name
Name
Telephone

## 1.2 Project Location Information

DRAFT

Project Name: Rilda Canyon to Huntington Pipeline

Project Location: Rilda and Huntington Canyons

County: Emery County

Latitude/Longitude: 39.407 -111.110

Method for determining latitude/longitude: Google Earth

Is the project located in Indian country? ☐ Yes ☒ No

Is this project considered a federal facility? ☒ Yes ☐ No

UPDES project or permit tracking number[1]: UPDES Number

[1] *This is the unique identifying number assigned to your project by your permitting authority after you have applied for coverage under the appropriate Pollutant Discharge Elimination System (PDES) construction general permit.*

## 1.3 Receiving Waters

Does your project/site discharge stormwater into a Municipal Separate Storm Sewer System (MS4)? ☐ Yes ☒ No

Description of storm sewer systems: None within project area

Description of receiving waters: Huntington Creek

Distance to the nearest waterbody: 0 feet

Category water: Category 1 within USFS boundary; Category 3 below USFS boundary.

Description of impaired waters or waters subject to TMDLs: Huntington Creek is impaired for selenuim.

If there are any surface waters located within 50 feet of your construction disturbances, complete the Supplemental Form - Buffer Compliance Alternatives. (If no, you are in compliance with the buffer requirements).

DRAFT

## 1.4 Type of Construction Activity

Check all that apply

☐ Residential ☐ Commercial ☐ Industrial ☐ Road ☐ Bridge ☐ Linear Utility
☐ Contouring, Landscaping ☒ Pipeline
☐ Other (please specify):

## 1.5 Construction Site Estimates

The following are estimates of the construction site:

| | |
|---|---|
| Total area of plot: | acres |
| Estimated area to be disturbed: | acres |
| Maximum area to be disturbed at any one time: | acres |
| Percentage impervious area before construction: | % |
| Runoff coefficient before construction: | |
| Percentage impervious area after construction: | % |
| Runoff coefficient after construction: | |

Estimated Project Start Date: Start Date
Estimated Project End Date: End Date

## 1.6 Additional Site Characteristics

The site was previously used for existing road rights-of-way.

Soil types:

Slopes:

Drainage patterns:

Vegetation:

Other topographical features:

## 1.7 Site Features and Sensitive Areas to be Protected

Unique features to be preserved:

Measures to protect these features:

DRAFT

## 1.8 Potential Sources of Pollution

Potential sources of sediment to stormwater runoff:

Potential pollutants and sources, other than sediment, to stormwater runoff:

| Activity and pollutants generated | Location |
|---|---|
| Clearing and grubbing – debris | |
| Construction – solid waste | |
| Construction – sanitary waste | |
| Chemical material storage and use | |
| Equipment operation | |
| Equipment fueling and maintenance | |
| Seeding – fertilizer,etc. | |
| Weed control - pesticide | |

## 1.9 Endangered Species Certification

Are endangered or threatened species or critical habitats on or near the project area?

☐ Yes ☐ No

Describe how this determination was made:

If yes, describe which species or critical habitats:

If yes, describe or refer to documentation that determines the likelihood of an impact on identified species and/or habitat and the steps taken to address that impact. (Note, if species are on or near your project site, EPA strongly recommends that the site operator work closely with the appropriate field office of the U.S. Fish and Wildlife Service or National Marine Fisheries Service. For concerns related to state or tribal listing of species, please contact a state or tribal official.)

### 1.10 Historic Preservation

Are there any historic sites on or near the construction site?

☐ Yes ☐ No

Describe how this determination was made:

If yes, describe or refer to documentation that determines the likelihood of an impact on this historic site and the steps taken to address that impact.

DRAFT

### 1.11 Applicable Federal, Tribal, State, or Local Programs

## Section 2. Erosion and Sediment Control BMPs

### 2.1 Minimize Disturbed Area and Protect Natural Features and Soil

Soil compaction will be minimized or corrected by…

Natural buffers will be delineated/marked by ___ to prevent disturbance from construction.

### 2.2 Phase Construction Activity

- Phase I
    1. Install storm water controls
    - Describe phase
    - Duration of phase (start date, end date)
    - List BMPs associated with this phase and estimated dates
    - Describe stabilization methods and estimated dates
    - Estimated dates when stormwater controls will be removed

    A detailed project schedule is included in Appendix D.

Repeat as necessary

## 2.3 Allowable Non-Stormwater Discharge Management

List allowable discharges and the measures used to eliminate or reduce them and prevent them from becoming contaminated.

| Allowable discharge | Measures to eliminate/reduce discharges |
|---|---|
| | |
| | |

| Type of Allowable Non-Stormwater Discharge |
|---|
| Discharges from emergency fire-fighting activities |
| Fire hydrant flushings |
| Properly managed landscape irrigation |
| Waters used to wash vehicles and equipment – no soap or solvent |
| Water used to control dust |
| Potable water including uncontaminated water line flushings |
| Routine external building wash down |
| Pavement wash waters |
| Uncontaminated air conditioning or compressor condensate |
| Uncontaminated, non-turbid discharges of ground water or spring water |
| Foundation or footing drains |
| Construction dewatering water |

(Note: You are reminded of the requirement to identify the likely locations of these allowable non-stormwater discharges on your site map.)

DRAFT

## 2.4 Control Stormwater Flowing onto and through the Project

| ***BMP Description***: Topsoil will be salvaged, and formed into a berm to prevent stormwater from flowing onto the site. | |
|---|---|
| ***Installation Schedule***: | |
| ***Maintenance and Inspection***: | |
| ***Responsible Staff***: | Name |

| ***BMP Description***: Temporary slope breakers are ridges or channels constructed diagonally on a slope, to reduce runoff velocity and divert water from the construction right-of-way. These may be constructed of soil, straw bales, or sand bags. Installation locations will be based on site review prior to ground disturbance, and where disturbance will occur on slopes greater than 5 percent when the base of the slope is less than 50 feet from a waterbody, wetland, or road crossing. The outfall of each breaker will be directed to a stable, well-vegetated area or |
|---|

| | |
|---|---|
| dissipating device, and will avoid discharging into waterbodies, wetlands, or other sensitive resource areas. Spacing will be based on the percent slope.<br><br>Slope (%) / Spacing (feet)<br>5-15 / 300<br>>15-30 / 200<br>>30 / 100 | |
| ***Installation Schedule***: | |
| ***Maintenance and Inspection***: | |
| ***Responsible Staff***: | Name |

| | |
|---|---|
| ***BMP Description***: Trench breakers will be installed to slow the flow of water through the open trench. Trench breakers will be constructed of sandbags. Installation locations will be based on site review and the result of inspections. | |
| ***Installation Schedule***: | |
| ***Maintenance and Inspection***: | |
| ***Responsible Staff***: | Name |

DRAFT

## 2.5 Stabilize Soils

| | |
|---|---|
| ***BMP Description:*** Dust will be suppressed by watering excavation faces and access roads as needed. | |
| ***Installation Schedule:*** | As needed based on inspection |
| ***Maintenance and Inspection:*** | |
| ***Responsible Staff:*** | Name |

| | |
|---|---|
| ***BMP Description:*** Soil roughening is a temporary erosion control practice – appropriate for slopes, especially greater than 3:1, soil piles, and areas with highly erodible soils, and areas that are disturbed a lot cause it's easy to do. Roughen as soon as vegetation has been removed or grading has ceased. Careful of compacting soil, not good on rocky slopes. | |
| ***Installation Schedule:*** | |
| ***Maintenance and Inspection:*** | |
| ***Responsible Staff:*** | Name |

| | |
|---|---|
| ***BMP Description:*** Seeding - Drill seeding is the preferred method of application unless site conditions preclude the use of drill seeding equipment. Drill seeds at the minimum rate of 45 pure live seeds (PLS) per linear foot. Seeds should be drilled to a depth of 0.25 to 0.5 inch. Areas in excess of 40% slope or that are excessively rocky will be broadcast seeded at 80-90 PLS and covered to a maximum of 0.25 inch by harrowing, drag bar, or roller. The BLM-approved seed mix will be used. | |
| ***Installation Schedule:*** | Seeding efforts should be conducted between August 15 and prior to winter freezing of the soil. Non-vegetative erosion control must be applied while seeded vegetation is becoming established, to reduce erosion and protect the seed. |
| ***Maintenance and Inspection:*** | |
| ***Responsible Staff:*** | Name |

| | |
|---|---|
| ***BMP Description:*** Mulch will be applied immediately after seeding. Mulch may consist of weed-free straw or hay, wood fiber hydromulch, or a functional equivalent. The contractor will provide, verify, and document that mulch is weed-free. Mulch will be spread uniformly over the area to cover at least 75 percent of the ground surface at a rate of 2 tons/acre of straw or its equivalent.<br>Mulch will be applied before seeding if final grading and installation of permanent erosion control measures will not be completed in an area within 20 days of the trench being backfilled, or construction or restoration activity is interrupted for extended periods (e.g., when seeding cannot be completed due to seeding period restrictions).<br>If mulch is applied before seeding, mulch application on all slopes within 100 feet of waterbodies and wetlands will be increased to a rate of 3 tons/acre of straw or equivalent. If wood chips are used as mulch, no more than 1 ton/acre will be used and no more than the equivalent of 11 lbs/acre available nitrogen (at least 50 percent of which is slow release) will be added. The contractor will ensure that mulch is adequately anchored to minimize erosion and soil loss due to wind and water. When anchoring with liquid mulch binders, the contractor will use the rates recommended by the manufacturer. Liquid mulch binders will not be used within 100 feet of wetlands or waterbodies. | |
| ***Installation Schedule:*** | |
| ***Maintenance and Inspection:*** | |
| ***Responsible Staff:*** | Name |

## 2.6 Protect Slopes

| |
|---|
| ***BMP Description:*** Permanent ***s***lope breakers will be used to reduce runoff velocity, divert water from the right-of-way, and prevent sedimentation into sensitive resources. Diverted water will be transferred to a stable area without causing water to pool or erode behind the breaker. Slope breakers may be constructed of materials such as soil, sand bags, or a functional equivalent. |

DRAFT

| | |
|---|---|
| ***Installation Schedule:*** | Prior to construction in applicable areas |
| ***Maintenance and Inspection:*** | |
| ***Responsible Staff:*** | Name |

| | |
|---|---|
| ***BMP Description:*** Pocking will be used to divert runoff and retain precipitation. The goal of pocking is to create a seedbed that is conducive to the establishment of permanent vegetation cover. Pocking consists of small depressions or terraces that are created by a backhoe, xx inches in depth. The pocks retain snow and rain, creating sites to facilitate seed germination and reduce runoff velocities. Pocks will be spaced approximately xx feet across the slope and xx feet down the slope, to minimize the potential of lower pocks failing should a pock above them fail. | |
| ***Installation Schedule:*** | On applicable slopes after topsoil has been replaced |
| ***Maintenance and Inspection:*** | |
| ***Responsible Staff:*** | Name |

DRAFT

| | |
|---|---|
| ***BMP Description:*** Bonded fiber matrix (BFM) mulch will be applied on steep slopes, immediately after seeding. Mulch will stabilize the soil surface and reduce erosion. BFM will be spread uniformly over the area at the manufacturer's recommended rates. | |
| ***Installation Schedule:*** | On applicable slopes after topsoil has been replaced |
| ***Maintenance and Inspection:*** | |
| ***Responsible Staff:*** | Name |

## 2.7 Protect Storm Drain Inlets

Storm drains do not occur within the project area.

## 2.8 Establish Perimeter Controls and Sediment Barriers

| | |
|---|---|
| ***BMP Description:*** Retain existing vegetative buffers. Runoff will be slowed and filtered by vegetation left adjacent to construction areas. | |
| ***Installation Schedule:*** | None required |
| ***Maintenance and Inspection:*** | None required |

| |
|---|
| ***BMP Description:*** Silt fences and fiber rolls will be used to retain sediment on-site to the |

| | |
|---|---|
| maximum extent possible. The controls will be selected, installed, and maintained in accordance with the manufacturer's specifications and good engineering practices. Controls will be refurbished when accumulated sediment reaches approximately 50 percent of the structure's capacity. Controls will be maintained until final stabilization measures are applied, and will be removed after reclamation procedures are completed. | |
| ***Installation Schedule:*** | Prior to ground disturbance on each construction spread |
| ***Maintenance and Inspection:*** | |
| ***Responsible Staff:*** | Name |

## 2.9 Retain Sediment On-site

| | |
|---|---|
| ***BMP Description:*** | |
| ***Installation Schedule:*** | |
| ***Maintenance and Inspection:*** | |
| ***Responsible Staff:*** | Name |

| | |
|---|---|
| ***BMP Description:*** | |
| ***Installation Schedule:*** | |
| ***Maintenance and Inspection:*** | |
| ***Responsible Staff:*** | Name |

## 2.10 Establish Stabilized Construction Exits

| | |
|---|---|
| ***BMP Description:*** | |
| ***Installation Schedule:*** | |
| ***Maintenance and Inspection:*** | |
| ***Responsible Staff:*** | Name |

| | |
|---|---|
| ***BMP Description:*** Monitor for sediment tracking off of the site. If necessary, implement techniques for sediment removal prior to vehicle exit. Wheel washing, rumble strips, or rattle plates may be used. If sediment is tracked off-site, collect the sediment by sweeping, shoveling, or vacuuming and dispose of in a stable location. | |
| ***Installation Schedule:*** | If needed |

DRAFT

| | |
|---|---|
| ***Maintenance and Inspection:*** | Inspect exit points (weekly or biweekly and after storms) |
| ***Responsible Staff:*** | Name |

### 2.11 Additional BMPs

| ***BMP Description:*** | |
|---|---|
| ***Installation Schedule:*** | |
| ***Maintenance and Inspection:*** | |
| ***Responsible Staff:*** | Name |

# Section 3. Good Housekeeping BMPs

A Spill Prevention and Response Plan (SPRP) has been prepared, as is attached as Appendix E. This SPRP details requirements for:

- Spill prevention and response procedures
- Waste management procedures
- Storage of materials
- Designated staging and washout areas

DRAFT

# Section 4. Inspections

### 4.1 Inspections

**Inspection Personnel**

Name:

Qualifications:

#### 4.1.1 Inspection Schedule and Procedures

Inspections will be conducted once every (week or 2 weeks) and within 24 hours of storm events. "Within 24 hours of a storm event" means within 24 hours once a storm event has produced 0.5 inches, even if the storm is continuing. Inspections are only required during normal working hours. If a storm event happens after hours on Friday, it does not need to be inspected until Monday.

During the site inspection, you must at a minimum inspect the following areas:

1. All areas that have been cleared, graded, or excavated and not yet stabilized;
2. All stormwater controls that have been installed;
3. Storage and maintenance areas;
4. Areas where stormwater typically flows within the site;
5. All points of discharge from the site; and
6. All locations where stabilization measures have been implemented (unless final stabilization has been achieved).

All erosion, sediment, and pollution prevention controls must remain in effective operating condition during permit coverage and be protected from activities that would reduce their effectiveness. When problems are noted during the inspections, they will be corrected immediately and be completed by the close of the next work day. If corrections cannot be completed by the next day, the rationale shall be documented in writing and what the schedule will be to make the correction. The SWPPP Coordinator will make the corrections or will assign someone to make the corrections. The SWPPP must be modified accordingly within 7 calendar days of completing the work. Any assignments will be documented in writing. The SWPPP Coordinator will follow up to verify that the corrections were made.

A current copy of all inspection reports will be kept at the work site or an easily accessible location, so that it can be made available at the time of on-site inspection or upon request by UDWQ. Inspection reports can be found in Appendix G.

DRAFT

## 4.2 Delegation of Authority

**Duly Authorized Representative or Position:**

Company or Organization Name
Name
Position
Address
City, State, Zip
Telephone
Email/Fax

The Delegation of Authority form is attached as Appendix L.

## 4.3 Corrective Action Log

A corrective action log is included as Appendix H. This log will describe repair, replacement, and maintenance of BMPs as a result of the inspections and maintenance procedures. It will also document clean-up and disposal of spills, releases, or other deposits, and remediation of any permit violation.

# Section 5. Recordkeeping and Training

## 5.1 Recordkeeping

Records will be retained for a minimum period of at least 3 years after the permit is terminated.

The NOI and acknowledgment letter from the state is attached as Appendix C.

A Grading and Stabilization Activities log is included as Appendix F.

## 5.2 Log of Changes to the SWPPP

The SWPPP is a working document, and should be updated accordingly. Some updates or changes are marked within the body of the SWPPP; these should be initialed and dated

An amendment log is included as Appendix I. This log documents additional changes and updates to the SWPPP, including the addition of new BMPs, replacement of failed BMPs, changes in activities or timing, changes in personnel, changes in inspection and maintenance, and updates to site maps. Revisions to the SWPPP must be completed within 7 calendar days of the change occurring.

DRAFT

## 5.3 Training

At a minimum, personnel must be trained to understand the following if related to the scope of their job duties:

- The location of all stormwater controls on the site required by this permit, and how they are maintained;
- The proper procedures to follow with respect to the permit's pollution prevention requirements; and
- When and how to conduct inspections, record applicable findings, and take corrective actions (only applies to inspection personnel)

A log of training is included as Appendix K.

# Section 6. Final Stabilization

If you complete major construction activities on part of your site, you can document your final stabilization efforts for that portion of the site. You can amend or add to this section as areas of your project are finally stabilized. Update your site plans to indicate areas that have achieved final stabilization. Note that dates for areas that have achieved final stabilization should be included on the Grading and Stabilization Activities Log in Appendix F.

## Section 7. Certification and Notification

I certify under penalty of law that this document and all attachments were prepared under my direction or supervision in accordance with a system designed to assure that qualified personnel properly gathered and evaluated the information submitted. Based on my inquiry of the person or persons who manage the system, or those persons directly responsible for gathering the information, the information submitted is, to the best of my knowledge and belief, true, accurate, and complete. I am aware that there are significant penalties for submitting false information, including the possibility of fine and imprisonment for knowing violations.

Name: _____ Title: _____

Signature:_____ Date: _____

Name: _____ Title: _____

Signature:_____ Date: _____

Repeat as needed for multiple construction operators at the site

DRAFT

# Appendix A. Maps, Drawings, and BMP details

First map should show undeveloped site and current features.

a. Boundaries of the property and of the locations where construction activities will occur, including:
    i. Locations where earth-disturbing activities will occur, noting any phasing of construction activities;
    ii. Approximate slopes before and after major grading activities. Note areas of steep slopes (15% or greater);
    iii. Locations where sediment, soil, or other construction materials will be stockpiled;
    iv. Locations of any crossings of surface waters;
    v. Designated points on the site where vehicles will exit onto paved roads;
    vi. Locations of structures and other impervious surfaces upon completion of construction; and
    vii. Locations of construction support activity areas covered by this permit.
b. Locations of all surface waters, including wetlands, that exist within or in the immediate vicinity of the site. Indicate which water bodies are listed as impaired, and which are identified as Category 1 or 2 waters;
c. The boundary lines of any natural buffers provided consistent with Part 2.1.2.a.i.
d. Topography of the site, existing vegetative cover (e.g., forest, pasture, pavement, structures), and drainage pattern(s) of storm water and authorized non-storm water flow onto, over, and from the site property before and after major grading activities;
e. Storm water and allowable non-storm water discharge locations, including:
    i. Locations of any storm drain inlets on the site and in the immediate vicinity of the site; and
    ii. Locations where storm water or allowable non-storm water will be discharged to surface waters (including storm sewer systems and/or wetlands) on or near the site.
f. Locations of all potential pollutant-generating activities identified in Part 7.2.6;
g. Locations of storm water control measures; and
h. Locations where tackifiers, polymers, flocculants, fertilizers, or other treatment chemicals will be used and stored.

DRAFT

# Appendix B. Construction General Permit

The Construction General Permit UTRC00000 can be accessed at:
http://www.waterquality.utah.gov/UPDES/docs/2014/07Jul/FinalSWConstructionGenPermit.pdf

DRAFT

# Appendix C. NOI and Acknowledgement Letter from State

DRAFT

# Appendix D. Project Schedules

DRAFT

# Appendix E. Spill Prevention and Response Plan

DRAFT

# Appendix F. Grading and Stabilization Activities Log

DRAFT

# Appendix G. Inspection Reports

DRAFT

# Appendix H. Corrective Action Log

DRAFT

# Appendix I. SWPPP Amendment Log

DRAFT

# Appendix J. Subcontractor Certifications/Agreements

## SAMPLE

Project Number:

Project Title:

Operator(s):

As a subcontractor, you are required to comply with the Stormwater Pollution Prevention Plan (SWPPP) for any work that you perform on-site. Any person or group who violates any condition of the SWPPP may be subject to substantial penalties or loss of contract. You are encouraged to advise each of your employees working on this project of the requirements of the SWPPP. A copy of the SWPPP is available for your review at the office trailer.

Each subcontractor engaged in activities at the construction site that could impact stormwater must be identified and sign the following certification statement:

**I certify under the penalty of law that I have read and understand the terms and conditions of the SWPPP for the above designated project and agree to follow the BMPs and practices described in the SWPPP.**

This certification is hereby signed in reference to the above named project.

Company:

Address:

Telephone Number:

Type of construction service to be provided:

Signature:_____

Title:

Date:_____

DRAFT

# Appendix K. Training Log

DRAFT

# Appendix L. Delegation of Authority

I, Name, hereby designate the person or specifically described position below to be a duly authorized representative for the purpose of overseeing compliance with environmental requirements, including the Construction General Permit, at the Rilda Canyon to Huntington Pipeline construction site. The designee is authorized to sign any reports, stormwater pollution prevention plans, and all other documents required by the permit.

Name
Company or Organization Name
Address
City, State, Zip
Phone
Email

By signing this authorization, I confirm that I meet the requirements to make such a designation as set forth in the General Permit No. UTRC00000, and that the designee above meets the definition of a "duly authorized representative" as set forth in the same permit.

I certify under penalty of law that this document and all attachments were prepared under my direction or supervision in accordance with a system designed to assure that qualified personnel properly gathered and evaluated the information submitted. Based on my inquiry of the person or persons who manage the system, or those persons directly responsible for gathering the information, the information submitted is, to the best of my knowledge and belief, true, accurate, and complete. I am aware that there are significant penalties for submitting false information, including the possibility of fine and imprisonment for knowing violations.

Name:

Company:

Title:

Signature:_____

Date:_____

DRAFT

# Appendix M. Additional Information

DRAFT

# Inspection Report – UPDES Number

| | | | |
|---|---|---|---|
| **Date of Inspection** | | **Start/End Time** | |
| **Inspector's Name(s)** | | | |
| **Inspector's Title(s)** | | | |
| **Describe present phase of construction** | | | |

**Type of Inspection:**
❑ Regular ❑ Pre-storm event ❑ During storm event ❑ Post-storm event

**Weather Information**

**Has there been a storm event since the last inspection?** ❑Yes ❑No
**If yes, provide:**
Storm Start Date & Time: Storm Duration (hrs): Approximate Amount of Precipitation (in):

**Weather at time of this inspection?**
❑ Clear ❑Cloudy ❑ Rain ❑ Sleet ❑ Fog ❑ Snowing ❑ High Winds
❑ Other: Temperature:

**Have any discharges occurred since the last inspection?** ❑Yes ❑No
**If yes, describe:**

**Are there any discharges at the time of inspection?** ❑Yes ❑No
**If yes, describe:**

DRAFT

## Site-specific BMPs

- *Number the structural and non-structural BMPs identified in your SWPPP on your site map and list them below (add as many BMPs as necessary). Carry a copy of the numbered site map with you during your inspections. This list will ensure that you are inspecting all required BMPs at your site.*
- *Describe corrective actions initiated, date completed, and note the person that completed the work in the Corrective Action Log.*

| BMP | | Installed? | Maintenance Required? | Corrective Action Needed and Notes |
|---|---|---|---|---|
| 1 | | ❑Yes ❑No | ❑Yes ❑No | |
| 2 | | ❑Yes ❑No | ❑Yes ❑No | |
| 3 | | ❑Yes ❑No | ❑Yes ❑No | |
| 4 | | ❑Yes ❑No | ❑Yes ❑No | |
| 5 | | ❑Yes ❑No | ❑Yes ❑No | |
| 6 | | ❑Yes ❑No | ❑Yes ❑No | |
| 7 | | ❑Yes ❑No | ❑Yes ❑No | |
| 8 | | ❑Yes ❑No | ❑Yes ❑No | |
| 9 | | ❑Yes ❑No | ❑Yes ❑No | |
| 10 | | ❑Yes ❑No | ❑Yes ❑No | |
| 11 | | ❑Yes ❑No | ❑Yes ❑No | |
| 12 | | ❑Yes ❑No | ❑Yes ❑No | |

| BMP | | Installed? | Maintenance Required? | Corrective Action Needed and Notes |
|---|---|---|---|---|
| 13 | | ❑Yes ❑No | ❑Yes ❑No | |
| 14 | | ❑Yes ❑No | ❑Yes ❑No | |
| 15 | | ❑Yes ❑No | ❑Yes ❑No | |
| 16 | | ❑Yes ❑No | ❑Yes ❑No | |
| 17 | | ❑Yes ❑No | ❑Yes ❑No | |
| 18 | | ❑Yes ❑No | ❑Yes ❑No | |
| 19 | | ❑Yes ❑No | ❑Yes ❑No | |
| 20 | | ❑Yes ❑No | ❑Yes ❑No | |

## Overall Site Issues

*Below are some general site issues that should be assessed during inspections. Customize this list as needed for conditions at your site.*

| | Implemented? | Maintenance Required? | Corrective Action Needed and Notes |
|---|---|---|---|
| Are all slopes and disturbed areas not actively being worked properly stabilized? | ❑Yes ❑No | ❑Yes ❑No | |
| Are natural resource areas (e.g., streams, wetlands, mature trees, etc.) protected with barriers or similar BMPs? | ❑Yes ❑No | ❑Yes ❑No | |
| Are perimeter controls and sediment barriers adequately installed (keyed into substrate) and maintained? | ❑Yes ❑No | ❑Yes ❑No | |
| Are discharge points and receiving waters free of any sediment deposits? | ❑Yes ❑No | ❑Yes ❑No | |
| Are storm drain inlets properly protected? | ❑Yes ❑No | ❑Yes ❑No | |
| Is the construction exit preventing sediment from being tracked into the street? | ❑Yes ❑No | ❑Yes ❑No | |
| Is trash/litter from work areas collected and placed in covered dumpsters? | ❑Yes ❑No | ❑Yes ❑No | |
| Are washout facilities (e.g., paint, stucco, concrete) available, clearly marked, and maintained? | ❑Yes ❑No | ❑Yes ❑No | |
| Are vehicle and equipment fueling, cleaning, and maintenance areas free of spills, leaks, or any other deleterious material? | ❑Yes ❑No | ❑Yes ❑No | |
| Are materials that are potential stormwater contaminants stored inside or under cover? | ❑Yes ❑No | ❑Yes ❑No | |

DRAFT

| | Implemented? | Maintenance Required? | Corrective Action Needed and Notes |
|---|---|---|---|
| Are non-stormwater discharges (e.g., wash water, dewatering) properly controlled? | ❑Yes ❑No | ❑Yes ❑No | |
| Are there any conditions that could lead to spills, leaks, or other accumulations of pollutants on the site? | | ❑Yes ❑No | |
| Are there any locations where new stormwater controls are necessary? | | ❑Yes ❑No | |
| Is there any visible erosion or sedimentation that is due to work at your site? | | ❑Yes ❑No | |

**Non-Compliance**

| |
|---|
| Describe any incidents of non-compliance not described above: |

DRAFT

Inspector's printed name: _____

Inspector's signature: _____ Date:_____

Operator's signature: _____ Date:_____

# SWPPP Training Log

Instructor's Name(s):_____

Instructor's Title(s):_____

Course location:_____ Date:_____

Course length (hours):_____

Stormwater Training Topic: (check as appropriate)

- ❑ **Erosion Control BMPs**
- ❑ **Emergency Procedures**
- ❑ **Sediment Control BMPs**
- ❑ **Good Housekeeping BMPs**
- ❑ **Non-Stormwater BMPs**

Specific Training Objective:_____

_____

Attendee Roster: (attach additional pages as necessary)

| No. | Name of Attendee | Company |
|---|---|---|
| 1 | | |
| 2 | | |
| 3 | | |
| 4 | | |
| 5 | | |
| 6 | | |
| 7 | | |
| 8 | | |
| 9 | | |
| 10 | | |

DRAFT

## Corrective Action Log

| Inspection Date | Inspector Name(s) | Description of BMP Deficiency | Corrective Action Needed (including planned date/responsible person) | Date Action Taken/Responsible Person |
|---|---|---|---|---|
| | | | | |
| | | | | |
| | | | | |
| | | | | |
| | | | | |
| | | | | |
| | | | | |
| | | | | |
| | | | | |
| | | | | |

DRAFT

## SWPPP Amendment Log

| Amendment No. | Description of the Amendment | Date of Amendment | Amendment prepared by (Name and title) |
|---|---|---|---|
| | | | |
| | | | |
| | | | |
| | | | |
| | | | |
| | | | |
| | | | |
| | | | |
| | | | |
| | | | |
| | | | |
| | | | |
| | | | |

DRAFT

## Grading and Stabilization Activities Log

| Date Grading Activity Initiated | Description of Grading Activity | Date Grading Activity Ceased (Indicate whether temporary or permanent) | Date when Stabilization Measures are Initiated | Description of Stabilization Measures and Location |
|---|---|---|---|---|
| | | | | |
| | | | | |
| | | | | |
| | | | | |
| | | | | |
| | | | | |
| | | | | |
| | | | | |
| | | | | |
| | | | | |

DRAFT

## Supplemental Form - Buffer Compliance Alternatives

These requirements only apply when a surface water is located within 50 feet of your project's earth disturbances, and in the case of intermittent waters, only to surface waters that have visible water flowing or that typically flow continuously more than two months out of the year.

*Note: Areas that you do not own or that are otherwise outside your operational control may be considered areas of undisturbed natural buffer for purposes of compliance with this part.*

You must ensure that any discharges to surface waters through the area between the disturbed portions of the property and any surface waters located within 50 feet of your site are treated by an area of undisturbed natural buffer and/or additional erosion and sediment controls in order to achieve a reduction in sediment load equivalent to that achieved by a 50-foot natural buffer.

You can comply with this requirement in one of the following ways; check the compliance alternative that you have chosen:

☐ I will provide and maintain a 50-foot undisturbed natural buffer.

- You must show the 50-foot boundary line of the natural buffer on your site map.
- You must delineate and clearly mark off, with flags, tape, or other similar marking device, all natural buffer areas.
- Where there is a concentrated storm water discharge leaving the site's disturbed area and crossing the natural buffer area, the concentrated flow must have treatment or BMPs to minimize sediment transport, found in the area generating the flow and not just as it crosses the buffer area. Additionally, velocity dissipation devices must be used where erosion is caused by the flow as it crosses the buffer area.

☐ I will provide and maintain an undisturbed natural buffer that is less than 50 feet and is supplemented by additional erosion and sediment controls, which in combination achieves the sediment load reduction equivalent to a 50-foot undisturbed natural buffer.

- You must show the boundary line of the natural buffer on your site map.
- You must delineate and clearly mark off, with flags, tape, or other similar marking device, all natural buffer areas.
- Where there is a concentrated storm water discharge leaving the site's disturbed area and crossing the natural buffer area, the concentrated flow must have treatment or BMPs to minimize sediment transport, found in the area generating the flow and not just as it crosses the buffer area. Additionally, velocity dissipation devices must be used where erosion is caused by the flow as it crosses the buffer area.
- You must document any information you relied upon to demonstrate the equivalency.

Estimated sediment removal or site-specific calculation of a 50-foot buffer:

DRAFT

Width of natural buffer to be retained:

Description of additional erosion and sediment controls to be used in combination with the natural buffer area:

Demonstrate that the combination of your buffer and the additional controls described above will meet or exceed the sediment efficiency of a 50-foot buffer:

☐ It is infeasible to provide and maintain an undisturbed natural buffer of any size; therefore, I will implement erosion and sediment controls that achieve the sediment load reduction equivalent to a 50-foot undisturbed natural buffer.

Rationale for concluding that it is infeasible:

Estimated sediment removal or site-specific calculation of a 50-foot buffer:

Description of erosion and sediment controls to be used:

Demonstrate that the additional controls described above will meet or exceed the sediment efficiency of a 50-foot buffer:

☐ I qualify for one of the following exceptions:

- ☐ There is no discharge of stormwater to the surface water that is located 50 feet from my construction disturbances.
- ☐ No natural buffer exists due to preexisting development disturbances that occurred prior to the initiation of planning for this project.
- ☐ For a linear project, site constraints (e.g., limited right-of-way) make it infeasible for me to meet any of the compliance alternatives.
  - Describe site constraints
  - Describe buffer width retained and/or supplemental erosion and sediment controls to treat discharges to the surface water
- ☐ The project qualifies as “small residential lot” construction.
- ☐ Buffer disturbances are authorized under a CWA Section 404 permit.
  - Describe permitted disturbances within the buffer area
- ☐ Buffer disturbances will occur for the construction of a water-dependent structure or water access area (e.g., pier, boat ramp, and trail).
  - Describe permitted disturbances within the buffer area

DRAFT

## Attachment H. Draft Spill Prevention and Response Plan (SPRP)

# Spill Prevention and Response Plan

## 1.1. General

This plan is established to provide the Contractor general guidance and procedures to manage project site operations which have potential to cause environmental damage and procedures to follow in case a hazardous spill occurs. The following discharges are prohibited from construction sites and pollution prevention standards are required whenever the sources for these potential pollutants are located on a construction site:

1. Wastewater from washout of concrete;
2. Wastewater from washout and cleanout of paint, form release oils, concrete grinding slurry, curing compounds, and other construction materials;
3. Fuels, oils, or other pollutants used in vehicle and equipment operation and maintenance;
4. Soaps, solvents, or detergents used in vehicle and equipment washing; and
5. Toxic or hazardous substances from a spill or other release.

## 1.2. Spill Prevention

### 1.2.1. Washout Practices

Provide an effective means of eliminating the discharge of contaminated water from the washout and cleanout of paint, concrete, form release oils, curing compounds, etc. by incorporating the following:

1. Direct all washwater into a leak-proof container/pit. The container or pit must be designed so that no overflows can occur due to inadequate sizing or precipitation. Segregate paint waste, oily waste, and concrete washout waste and manage the proper disposal separately.
2. Ensure liquid wastes are not dumped in storm sewers or surface waters.
3. Locate any washout or cleanout activities as far away as possible from surface waters and stormwater inlets or conveyances.

### 1.2.2. Fueling and Maintenance of Equipment or Vehicles

The contractor will designate the location, size, and use of service/refueling areas. Designated areas will be a minimum of 300 feet from perennial and intermittent stream channels, seeps and springs, wetlands, lakes, reservoirs, stock water developments, and other water features. All heavy equipment and service vehicles will have a supply of absorbent and other cleanup materials on hand for initial containment of spills.

If fueling or maintenance of equipment or vehicles occur on the project site, the following are required:

DRAFT

1. Ensure adequate supplies are available at all times to handle spills, leaks, and disposal of used liquids;
2. Use drip pans and absorbents under or around leaky vehicles;
3. Dispose of or recycle oil and oily wastes in accordance with other federal, state, tribal, or local requirements;
4. Clean up spills or contaminated surfaces immediately, using dry clean up measures where possible, and eliminate the source of the spill to prevent discharge or a furtherance of an ongoing discharge; and
5. Do not clean surfaces by hosing the area down.

### 1.2.3. Washing of Equipment and Vehicles

No equipment or vehicle washing is allowed within or along the right-of-way; washing will occur at a designated location off-site. Equipment is required to be maintained, clean, operationally safe, and in good repair. All equipment will be thoroughly washed to remove accumulations of oil and grease, mud, soil, vegetative material, and noxious weed seed.

### 1.2.4. Storage of Products that have the Potential to be Hazardous or Toxic Waste

Examples of hazardous or toxic waste that may be present at construction sites primarily include, but are not limited to, petroleum-based products used to operate and maintain construction equipment and vehicles, pipeline coating material, and paints. When storing any hazardous materials on the construction site, comply with the following:

1. Store these products in water-tight containers, and provide either cover (e.g., plastic sheeting or temporary roofs) to prevent these containers from coming into contact with rainwater or provide secondary containment (e.g., spill berms, decks, spill containment pallets). Chemicals that are not compatible (such as sodium bicarbonate and hydrochloric acid) shall be stored in segregated areas so that spilled materials cannot combine and react.
2. Materials will only be stored in clearly marked containers in designated locations.
3. Materials will be stored in secure areas to prevent damage, vandalism, or theft. During construction hours, materials may be stored temporarily on the right-of-way, but overnight storage on the right-of-way is prohibited. All storage containers will remain sealed when not in use and storage areas will be secured (gated, locked, and or guarded) at night and during periods of inactivity.
4. Materials no longer required for construction will be removed from the site as soon as practicable.

DRAFT

## 1.3. Spill Response

1. A leak, spill, or other release that meets any of the following measures is a hazardous spill and requires an emergency spill notification:
    a. 25 gallons or more of fuel or oil are spilled or cause oil sheen to form on a water surface; or
    b. Reportable quantities of substances established at 40 CFR 117.3 and 302 within a 24-hour period.
2. Emergency Spill Notification Procedures: If the spill presents a potential for harm to personnel, public, or the environment, the Contractor is not able to immediately control and clean-up the spill, and/or the spill exceeds the reportable quantity, the following actions shall be taken:
    a. If the spill is clearly an emergency hazardous spill condition, within 24 hours the Contractor will notify:

| | |
|---|---|
| Project Manager | |
| EPA - National Response Center | (800) 424-8802 |
| Utah DEQ | (801) 536-4123 |
| Emery Emergency Services | 911 |
| Manti-La Sal National Forest | |
| BLM Price Field Office | |

    b. Within 7 calendar days of the release, provide a description of, circumstances leading to, and the date of the release.
    c. It is recommended that the Contractor use a State Certified Hazardous Materials Lab when necessary to identify an unknown spill material. Identifying the type of spill material or liquid containment can save the Contractor from increase costs for disposal if the material to be removed is known.
    d. The Contractor is responsible for all required hazardous waste management which includes but is not limited to the transportation, storage, and disposal at a hazardous waste disposal facility.
3. Waste Disposal and Minor Spills: A minor spill is a condition that does not present potential harm to personnel and/or the environment. The Contractor has the ability to immediately control and clean-up the spill, and the spill does not meet the hazardous spill definition. Actions to control non-emergency spills involve the following activities from the Contractor:
    a. Begin spill clean-up immediately and use trained personnel to respond to critical events involving spills.
    b. Use contingency clean-up products and equipment to handle non-emergency spills (absorbent materials, personal protection equipment, compatible empty container to store spilled material, fire extinguisher, etc.)

DRAFT

c. Spilled liquids or solids are to be properly contained in a compatible container and stored on-site until proper disposal action is taken as required by state and federal requirements. Where a spill occurs or when hazardous wastes are generated, the Contractor will fill out a hazardous waste label and establish an accumulation date.

## 1.4. Waste Management Procedures

### 1.4.1. Disposal of Waste Products

1. For construction and domestic waste: Provide waste containers (e.g., dumpster or trash receptacle) of sufficient size and number to contain construction and domestic wastes. In addition, clean up and dispose of waste in designated waste containers daily and clean up immediately if containers overflow.
2. For sanitary waste: Position portable toilets so that they are secure and will not be tipped or knocked over. They must be positioned at least 10 feet from any storm water conveyance, inlet, curb, or gutter, or have secondary containment.
3. Separate hazardous or toxic waste from construction and domestic waste. Mixing increases hazardous waste volume and consequent handling and disposal costs.
4. Store waste in sealed containers, which are constructed of suitable materials to prevent leakage and corrosion, and which are labeled in accordance with applicable Resource Conservation and Recovery Act (RCRA) requirements and all other applicable state or local requirements. Label hazardous waste containers as such.

DRAFT

# Attachment I. Reclamation Plan

This reclamation plan was developed in accordance with the Green River District Reclamation Guidelines, and outlines measures that will be implemented to reclaim areas disturbed by the pipeline project. The plan also includes measures to manage noxious weeds.

Reclamation will be completed on all USFS- and BLM-administered lands and disturbed private lands with approval.

Reclamation and best management practices would be implemented during and after construction activities to minimize impacts on the environment to the greatest extent practicable. Reclamation methodologies to be implemented during and after construction are described in the following sections. In addition, monitoring would be implemented to ensure that reclamation techniques are successful.

## a. Inspection

### i. Compliance Inspection Contractor (CIC)

At least one Compliance Inspection Contractor (CIC) is required for each construction spread during construction and restoration and will be hired by the right-of-way holder. The number and experience of CICs assigned to each construction spread should be appropriate for the length of the construction spread and the resources potentially affected. Reports will be submitted to the USFS and BLM on a weekly basis.

The CIC shall have peer status with all other activity inspectors.

CIC shall have the authority to stop activities that violate the environmental conditions of the approved permit, state and federal environmental permit conditions, or landowner requirements. The CIC also has authority to order appropriate corrective action.

At a minimum, the CIC shall be responsible for:

1. Ensuring compliance with the requirements of this POD, the conditions of the right-of-way grants, other environmental permits and approvals, and environmental requirements in landowner easement agreements;
2. Identifying, documenting, and overseeing corrective actions, as necessary to bring an activity back into compliance;
3. Verifying that the limits of authorized construction work areas and locations of access roads are properly marked before clearing;
4. Verifying the location of signs and highly visible flagging marking the boundaries of sensitive resource areas, waterbodies, wetlands, or areas with special requirements along the construction work area;
5. Identifying erosion/sediment control and soil stabilization needs in all areas;
6. Ensuring that the location of dewatering structures and slope breakers will not direct water into known cultural resources sites or locations of sensitive species;
7. Verifying that trench dewatering activities do not result in the deposition of sand, silt, or sediment near the point of discharge into a wetland or waterbody. If such

deposition is occurring, the dewatering activity shall be stopped and the design of the discharge shall be changed to prevent reoccurrence;

8. Advising the construction contractor when conditions (e.g., wet weather) make it advisable to restrict construction activities to avoid excessive rutting;
9. Ensuring restoration of contours and topsoil;
10. Determining the need for and ensuring that erosion controls are properly installed, as necessary to prevent sediment flow into wetlands, waterbodies, sensitive areas, and onto roads; and
11. Identifying areas that should be given special attention to ensure stabilization and restoration after the construction phase.

## b. Preconstruction considerations

### i. Construction work areas

Ensure that appropriate surveys for biological and cultural resources have been completed. A pre-disturbance noxious weed inventory will be completed and a report submitted to the USFS and BLM. Any necessary treatment to prevent the spread of weeds that may be present will be completed prior to project disturbance.

### ii. Road crossings and access points

Plan for safe and accessible conditions at all roadway crossings and access points during construction and restoration.

### iii. Disposal planning

Determine methods and locations for the disposal of construction debris (e.g., timber, slash, mats, garbage, drilling fluids, excess rock, etc.). Off-site disposal in other than commercially operated disposal locations is subject to compliance with all applicable survey, landowner permission, and mitigation requirements.

### iv. Stormwater Pollution Prevention Plan (SWPPP)

A SWPPP will be prepared prior to construction and will be made available on each construction spread for compliance with the UPDES permit requirements. The SWPPP will include necessary erosion controls to prevent sediment transport from the project area. A Spill Prevention and Response Plan (SPRP) will also be included as part of the SWPPP, to reduce the risk of pollution.

## c. Construction considerations

### i. Noxious weeds

- A pre-disturbance noxious weed inventory will be conducted to determine the presence of noxious weeds prior to beginning the project, and to determine whether treatment is needed prior to disturbance. If noxious weeds are found, a report would be prepared to include the following:
    1. Location (GPS if possible);

2. Species;
3. Canopy cover or number of plants; and
4. Size of infestation (square feet or acres).

- All vehicles and equipment would be cleaned prior to accessing the right-of-way or ancillary facilities, either through power-washing or other approved method, to prevent weed seed introduction.
- All vehicles, OHVs, and equipment would be power-washed after driving through a noxious weed infestation (Utah Noxious Weed Act). Travel through weed-infested areas would be avoided or minimized.
- Certified noxious weed-free seed and mulch would be used (Utah Seed Law). Sand, gravel, borrow, and fill material would be from noxious weed-free sources to prevent the introduction and spread of weeds.
- Staging areas would be located in weed-free sites.
- The project area and stockpiled material would be maintained in a weed-free condition to prevent weed seed production. These include, but are not limited to, facility sites, cut and fill slopes, topsoil reserves, roadsides, and borrow areas along roads.
- All new noxious weed infestations on USFS- and BLM-administered lands would be reported to the respective agency's weed coordinator. New infestations would be controlled when found, and before seed set if possible. Some populations may require more than one treatment per year.
- All herbicide treatments would be applied by a Utah licensed pesticide applicator. If licensed in another state, a reciprocal license may be obtained through the Utah Department of Agriculture website.
- A Pesticide Use Proposal must be approved prior to chemical application on BLM-administered lands. Only BLM-approved pesticides and adjuvants would be used.
- All pesticide applications would be recorded on Pesticide Application Record (PAR) forms within 24 hours of application. All PAR forms would be returned to the BLM weed coordinator by December 1st of each year, along with an annual pesticide report.
- Pesticides may be applied through:
    1. backpack spot sprayer (preferred)
    2. wick application (preferred)
    3. low or high boom sprayers mounted on truck or ATV
    4. aerial
    5. other label recommended method

  All pesticide applications must strictly follow label instructions.
- Standard stipulations for pesticide application are as follows:
    1. Spraying or application of pesticides would not be done when wind speeds exceed 10 miles per hour or if heavy rainfall or other adverse weather conditions exist.

2. No pesticide application would occur within the following distances of open water, such as springs, wetlands, streams, ponds, or lakes, unless otherwise specified on the pesticide label:
    - 100 feet aerial application
    - 25 feet boom truck application
    - 10 feet backpack sprayer application
3. Herbicide applications within 1,500 feet of special status plants or populations would be coordinated with the BLM weed coordinator. Additional measures may be incorporated into application plans for control around special status plants or populations.
4. All commercial and private applicators of pesticides would be currently licensed or hold a reciprocal license with the State of Utah (Utah Pesticide Control Act).
5. Empty containers would be disposed of in accordance with label instructions.
6. Equipment would NOT be washed out or cleaned near streams, open water, or drainages that can carry water.
7. Pesticides would only be transported when properly secured and with containers properly sealed and labeled.

- Invasive plants to be controlled include:
    1. All federally listed noxious weeds
    2. All state-listed noxious weeds
    3. All county-listed noxious weeds within the entire state of Utah.
    4. Other invasive plants deemed important for control by USFS and BLM, due to high risk of invasion and impact to adjacent undisturbed vegetation areas.

### ii. Topsoil and surface preparations

- Topsoil will be segregated from the subsoil (without mixing them), stockpiled separately from other soil materials, and maintained for future use in rehabilitating the site.
- After construction is complete, salvaged topsoil will be re-distributed evenly over disturbed surfaces.
- Topsoil piles stored beyond one growing season will be stabilized and seeded to prevent erosion. Topsoil storage areas will be identified with appropriate signage.
- All waste material will be segregated from subsoil and topsoil, and disposed of in an authorized disposal facility in accordance with local, state, and federal requirements.

## d. Post-construction Considerations

### i. Visuals

- Ensure the overall location, landform, scale, shape, color, and orientation of major landscape features blends into the adjacent area and meets the needs of the planned post-disturbance land use. Specific measures to achieve this consideration include:
    1. To the extent that is safe and possible, rock scree and boulders within the right-of-way will be set aside prior to or during excavation of the pipeline trench and will be

replaced on the prepared slope during restoration to mimic the texture of the existing adjacent landscape.

2. Dead and removed wood may be stockpiled to be spread over the disturbed area after construction to provide additional texture and aid plant establishment.
3. After installation of the pipeline, the disturbed area will be graded to match existing adjacent topography.
4. Pock marks will be installed irregularly across the slope to create additional texture and create micro-habitats for re-vegetation. These will be installed to BLM specifications.

### ii. Noxious weeds

- All disturbance areas would be monitored for noxious weeds annually, for a minimum of three growing seasons following completion of the project or until desirable vegetation is established. If found, weeds would be treated as described above.

### iii. Topsoil and final surface preparations

- Salvaged topsoil would be redistributed evenly and to pre-disturbance depths. Final grading, topsoil replacement, and any permanent erosion control structures would be completed within 20 days after backfilling the trench. If seasonal or other weather conditions prevent compliance with this time frame, maintain temporary erosion controls until conditions allow completion of final surface preparations.
- Reduce soil/subsoil compaction to the anticipated root depth of the desired plant species.
    - Compaction relief typically should be designed for 18-24 inches in depth.
    - Compaction relief should be designed to create a crosshatch pattern, and distance between furrows should not be greater than 2 feet.
- Re-spread the topsoil according to the following standards.
    - If the topsoil to be re-spread is greater than 6 inches in depth, then topsoil should be applied before compaction relief is implemented.
    - If the topsoil to be re-spread is less than 6 inches, then topsoil should be applied after compaction relief is implemented.
    - If large clumps or clods occur, disking may be necessary.

### iv. Re-vegetation

- Drill seeding is the preferred method of seed application unless site conditions preclude the use of drill seeding equipment.
    - Drill seeds at the minimum rate of 45 pure live seeds (PLS) per linear foot. Seeds should be drilled to a depth of 0.25 to 0.5 inch.
    - Some plant seeds should not be drilled. If those species are used, the application method should fit the seed type requirements.
    - Areas in excess of 40% slope or that are excessively rocky will be broadcast seeded at 80-90 PLS and covered to a maximum of 0.25 inch by harrowing, drag bar, or roller.

- Seeding efforts should be conducted between August 15 and prior to winter freezing of the soil. If seeding cannot be completed prior to winter freezing, hydromulch with tackifier will be applied where appropriate. Roadway clear zones will be treated in accordance with UDOT and Emery County standards (typically graveled).

The final seed mix will be approved by the USFS and BLM.

### v. Monitoring and reporting

- Vegetative monitoring protocol would be approved by the agencies prior to implementation of reclamation techniques. The monitoring methodology would be designed to monitor basal vegetative cover. Monitoring criteria include the following:
    1. Qualitative monitoring data should be collected after the second growing season following reclamation actions.
    2. Quantitative data should be collected after the third and fifth growing seasons, and the year that the applicant determines that reclamation meets the long-term objective of 75 percent basal cover as compared to the reference site. General view photographs of the reclaimed areas should be submitted with the quantitative data. Photographs should be taken at the same photo point each time, and as close to the same time of year as previous photos were taken to reduce differences in plant growth characteristics.
    3. If after three growing seasons there is less than 30 percent of the basal cover based on comparison to the reference site, then the Authorized Officer may require additional reclamation efforts.
    4. All seed utilized will be tested prior to application to ensure that the agency and State of Utah specifications for PLS, purity, and noxious weeds have been met.
    5. As determined by the Authorized Officer, temporary fencing may be required to exclude livestock/big game grazing until seeded species have become established.
    6. As determined by the Authorized Officer, mulching may be required.
        - If utilized, mulch should be applied within 24 hours following completion of seeding. Mulching should consist of crimping certified weed-free straw or certified weed-free native grass hay into the soil.
        - Hydro-mulching may be used in areas where crimping is impracticable, in areas of interim reclamation that were hydro-seeded, and in areas of temporary seeding regardless of seeding method.
- The process of monitoring, evaluating, documenting, and implementing reclamation measures would be repeated until reclamation goals are achieved, as determined by the appropriate Authorized Officer.
- PacifiCorp would be responsible to ensure that revegetated areas would be inspected annually and monitored to document location and extent of areas with successful revegetation, and areas needing further reclamation (for a minimum of 3 years after construction completion). An annual reclamation report would be submitted to the Authorized Officer by March 31 of each year.
- Prior to any surface disturbance, vegetative monitoring locations and undisturbed reference sites would be identified by the right-of-way holder and approved by the agencies.

1. Reference sites will be permanently marked and the location recorded by GPS in North American Datum 1983.
2. A photograph consisting of a general view of the marked reference site should be submitted with the reference site data.
3. All linear rights-of-way will have one monitoring transect per each NRCS ecological site that the right-of-way passes through for greater than 0.75 mile.

- PacifiCorp will submit all reclamation efforts annually to the Green River District Data Management System (GRDMS) and a report will be submitted to the Manti-La Sal National Forest and BLM Price Field Office by March 1. Reclamation efforts will include:
    1. Document compliance with all aspects of the reclamation goals, objectives, and actions and describe the reclamation accomplished.
    2. Document the results of the noxious weed inventory; and
    3. Recommend revised reclamation strategies, if necessary.
- Implement revised reclamation strategies as needed.
- PacifiCorp will repeat the process of monitoring, evaluating, documenting/reporting, and implementing, until reclamation goals are achieved, as determined by the Authorized Officer.

## Attachment J. Cultural Resources Discovery Plan

In the event than an unanticipated buried cultural resource (referred to hereafter as a discovery) is identified during surface-disturbing activities, this discovery protocol will be followed to ensure the proper identification, evaluation, and mitigation of adverse impacts to the resource.

**Discovery Protocol**

All project activity within 100 feet of the discovery will cease immediately. Work may not resume until the resource can be identified and evaluated by the archaeological contractor and the appropriate government archaeologist. In direct consultation with the BLM, USFS, or other appropriate surface management agency, the SHPO, owner, and the archaeological contractor will develop an emergency treatment strategy. Efforts will be made to expedite resumption of construction without further adverse impacts to the cultural resource. The following six steps must be completed before work can resume in the vicinity of the discovery:

1. Cease all activity within 100 feet of the discovery. Work can continue outside the 100-foot buffer if an archaeological monitor is present and has determined that no additional impacts to the discovery will occur.
2. Notification:
   a. If the discovery is on BLM-administered lands, notify the appropriate BLM Field Office and SHPO of the discovery within 24 hours.
   b. If the discovery is on USFS-administered lands, notify the Manti-La Sal National Forest and SHPO of the discovery within 24 hours.
   c. If the discovery is on UDOT land, notify UDOT and SHPO of the discovery within 24 hours.
   d. If the discovery is on private land, notify SHPO of the discovery within 24 hours.
3. Site documentation and evaluation by an archaeological consultant and government representatives if warranted by others.
4. Determination of eligibility by others.
5. Preparation of action plan/mitigation plan by others.
6. Resumption of work upon receipt of written permission from the appropriate land management agency or SHPO.

**Unanticipated Discovery of Human Remains and Associated Materials Protocol:**

1. Human Remains on BLM- or USFS-administered land:
   a. Discovery Notification – If human remains, remains thought to be human, associated or unassociated funerary objects, or objects of cultural patrimony are discovered, work within 100 feet of the discovery will stop immediately. Verbal notification of the discovery will be made to the BLM, the SHPO, and owner immediately. Upon notification, the BLM would notify the appropriate law enforcement authorities, the county coroner, and appropriate Native American Graves Protection and Repatriation Act (NAGPRA) coordinator. If the remains are determined to not be of forensic importance, an assessment of the remains would be made by others.
   b. Assessment of the Remains – An in-situ assessment of the remains would be made by others to determine the cultural affiliation of the remains, to aid in determining required actions as defined in a written NAGPRA Plan of Action (POA) prepared by the BLM. The BLM would meet all

requirement of NAGPRA for all discoveries of human remains and associated objects in accordance with 43 CFR 10 and BLM IM 2007-002, which allows for reburial of human remains and associated funerary objects excavated on BLM-administered land. All reasonable measures would be taken by the involved parties to resolve issues regarding affiliation and disposition of human remains within 30 days as required by law.

c. Protection of Human Remains – The owner is responsible for the security and protection of human remains during NAGRPA consultations, at least until disposition of the remains is determined.
d. Resumption of Work – Work in the immediate vicinity of the human remains may not resume until after the disposition of the human remains is determined. Permission to proceed would come from the BLM, after consultation with SHPO and appropriate Tribal representatives. This permission can only be given after a written binding agreement is executed between the necessary parties. This agreement adopts a recovery plan for removal, treatment, and disposition of the human remains or associated objects in accordance with 43 CFR Part 10.4(e).

2. Human Remains on private land:

Treatment of human remains discovered on private land would be treated as defined by state law, State of Utah Code Annotated 9-9-401 et. Seq., 7-9-704, 9-9-305, 9-8-176.

a. Discovery Notification – If human remains, remains thought to be human, associated or unassociated funerary objects, or objects of cultural patrimony are discovered, work within 100 feet of the discovery will stop immediately. The owner will make notification, either verbal or written, of the discovery to the SHPO and the appropriate law enforcement agency. If the remains are determined to not be of forensic importance, an assessment of the remains would be made by others.
b. Assessment of the Remains – An in-situ assessment of the remains would be made by others to determine the cultural affiliation of the remains, to aid in determining required actions as defined in a written Action Plan prepared by the SHPO. SHPO would meet all requirements of applicable state and federal laws for all discoveries of human remains and associated objects on state lands and private property. All reasonable measures would be taken by the involved parties to resolve issues regarding affiliation and disposition of human remains within 30 days as required by law.
c. Protection of Human Remains – The owner is responsible for the security and protection of human remains during consultations if the remains are located on state or private lands.
d. Resumption of Work – Work in the immediate vicinity of the human remains may not resume until after the disposition of the human remains. Permission to proceed would come from the SHPO in consultation with the appropriate Tribal representatives, depending on property ownership. This permission can only be given after a written binding agreement is executed between the necessary parties. This agreement adopts a recovery plan for removal, treatment, and disposition of the human remains or associated objects. Removal of human remains from state and private lands can only be executed by special permit issued by the SHPO and after consultation with the Native American Remains Committee and affiliated Tribes.

# Appendix E. Biological Assessment and Biological Evaluation

# Deer Creek Mine Closure Water Pipeline

## Biological Assessment and Biological Evaluation of Sensitive Species


Prepared by: Jenna Jorgensen

Environmental Coordinator, Jones and DeMille Engineering

Reviewed by: _____ Date: 8/12/16

Jeff Jewkes

Wildlife Biologist, Manti-La Sal National Forest

Reviewed by: _____ Date: 8/26/2016

Pam Manders

Fisheries Biologist, Manti-La Sal National Forest

Reviewed by: _____ Date: 23 SEPT 2016

Kim Anderson

Botanist, Manti-La Sal National Forest


**for:**

Ferron-Price Ranger District
Manti-La Sal National Forest

8/12/2016

In accordance with Federal civil rights law and U.S. Department of Agriculture (USDA) civil rights regulations and policies, the USDA, its Agencies, offices, and employees, and institutions participating in or administering USDA programs are prohibited from discriminating based on race, color, national origin, religion, sex, gender identity (including gender expression), sexual orientation, disability, age, marital status, family/parental status, income derived from a public assistance program, political beliefs, or reprisal or retaliation for prior civil rights activity, in any program or activity conducted or funded by USDA (not all bases apply to all programs). Remedies and complaint filing deadlines vary by program or incident.
Persons with disabilities who require alternative means of communication for program information (e.g., Braille, large print, audiotape, American Sign Language, etc.) should contact the responsible Agency or USDA's TARGET Center at (202) 720-2600 (voice and TTY) or contact USDA through the Federal Relay Service at (800) 877-8339. Additionally, program information may be made available in languages other than English.
To file a program discrimination complaint, complete the USDA Program Discrimination Complaint Form, AD-3027, found online at http://www.ascr.usda.gov/complaint_filing_cust.html and at any USDA office or write a letter addressed to USDA and provide in the letter all of the information requested in the form. To request a copy of the complaint form, call (866) 632-9992. Submit your completed form or letter to USDA by: (1) mail: U.S. Department of Agriculture, Office of the Assistant Secretary for Civil Rights, 1400 Independence Avenue, SW, Washington, D.C. 20250-9410; (2) fax: (202) 690-7442; or (3) email: program.intake@usda.gov.
USDA is an equal opportunity provider, employer and lender.)

# Contents

Introduction ..... 1
Project Description ..... 1
Project Location ..... 1
Proposed Project ..... 1
Project Action Area ..... 2
General Setting ..... 2
Species Considered ..... 2
Listed Species that May Be Present ..... 2
Listed Species Carried Forward ..... 3
Sensitive Species that May Be Present ..... 4
Current Management Direction ..... 6
Existing Environment ..... 6
Species ..... 6
Direct and Indirect Effects of the Proposed Action ..... 7
Interrelated and Interdependent Effects ..... 7
Cumulative effects ..... 8
Conclusion and Determination of Effect ..... 8
Management Recommendations ..... 8

**Tables**

Table 1. Listed species that may be present in the Deer Creek Mine Closure Water Pipeline project area, and rationale for further consideration in this biological assessment. ..... 3
Table 2. Regional sensitive species that may occur or have suitable habitat in or around the Deer Creek Mine Closure Water Pipeline Project ..... 4

# Introduction

The biological assessment (BA) portion of this document analyzes the potential effects to listed species from the installation of the proposed Deer Creek Mine Closure Water Pipeline Project.

The biological evaluation (BE) portion of this document analyzes the potential effects of the proposed project on species listed as sensitive on the Regional Forester's Sensitive Species List for the Intermountain Region (Region 4), and to determine whether the likely effects on these species would result in a trend toward becoming federally listed.

# Project Description

## Project Location

The project area is located in Rilda and Huntington Canyons, about 10 miles west of Huntington in Emery County, Utah (see Map 1 in Appendix A). The project area is within sections 22, 23, 26, 27, 28, 29, 25, 35, and 36 of T16 S, R 7 E.

## Proposed Project

The proposed project includes construction of 5.6 miles of a 10-inch HDPE gravity flow water pipeline from the Deer Creek Mine 1st Right Portals to settling ponds at Huntington Power Plant; only 1.8 miles would cross National Forest lands. The pipeline would be constructed within the rights-of-way for Emery County Road #306 and State Route 31 (SR-31). The proposed permanent right-of-way width is 12 feet centered on the pipeline; an additional 20 feet of temporary right-of-way on the outer edge of the permanent right-of-way (away from the roadway) would allow for construction of the pipeline. The total acreage of disturbance on National Forest is estimated to be 7.0 acres. Up to 1.7 acres of the temporary disturbance would occur beyond the Emery County Road #306 right-of-way across USFS-administered land.

The pipeline will include two shut-off valves; one at the mine entrance to prevent leaks on National Forest land, and one after the first SR-31 crossing, on private land just north of National Forest land.

The trench for the pipeline would be excavated with a trenching machine or track hoe excavator. Topsoil and subsoil would be segregated and stockpiled separately adjacent to the trench. After the pipeline is installed, the stockpiled subsoil would be used to backfill the trench, and the topsoil would be replaced on the surface and graded to pre-disturbance contours.

The pipeline would be buried with at least 5 feet of cover, except at the crossings of Huntington Creek; the pipeline would be attached to an existing bridge and diversion structure at each crossing. The pipeline would not be buried at these locations. Air vents and Carsonite posts would be installed approximately every 1,000 feet along the alignment; these features would be about 4 feet high, but would be colored to be visually unobtrusive from the roadway. A tracer wire and a fiber optic conduit would also be buried with the pipeline. The conduit would allow for installation of a telecommunications cable in the future without requiring excavation of the entire length of line.

Directional drilling would be applied to install the pipeline under Emery County Road #306, SR-31, and Bear Canyon Road; these drilling locations are on private or BLM-administered land. A stormwater pollution prevention plan (SWPPP) and spill prevention and response plan (SPRP) would be prepared and implemented to ensure compliance with the Clean Water Act during construction.

Construction is anticipated to take 2 to 3 months in the fall and early winter of 2016. Disturbed areas will be reclaimed upon project completion. After construction, PacifiCorp would maintain the right-of-way

and allow the pipeline to operate continuously. If the power plant were to shut down, continuing water treatment would be required at the plant if compliance with water quality standards could not be met. The pipeline would be intended to be permanent; if the pipeline were decommissioned, it would be left in the ground to avoid further ground disturbance.

# Project Action Area

The project action area includes the proposed pipeline right-of-way and extends one-half (0.5) linear mile for potential noise disturbance impacts. This area includes Huntington Creek, cliffs, and forested areas in both canyons.

Ongoing activities include grazing, mining-related activities, dispersed camping, and frequent roadway use.

## General Setting

The project area is within the High Plateaus of Utah physiographic subdivision of the Colorado Plateau. More specifically, the project area is located in Rilda and Huntington Canyons, on the east side of the Wasatch Plateau. Elevation of the proposed project is between 6,500 and 7,800 feet above sea level. A majority of the project area has been previously impacted by the existing roadways within these canyons.

# Species Considered

## Listed Species that May Be Present

The total project area encompasses approximately 21.83 acres at the bottom of Rilda and Huntington Canyons. Based on the IPaC System (accessed 9-2-2016), the U.S. Fish and Wildlife Service lists fifteen species as threatened, endangered, or candidate that could occur within Emery County. These species are listed in Table 1 below.

**Table 1. Listed species that may be present in the Deer Creek Mine Closure Water Pipeline project area, and rationale for further consideration in this biological assessment.**

| Species | Status | Species Likely Occurrence in the Action Area and Consideration in this BA |
|---|---|---|
| California condor (*Gymnogyps californianus*) | Endangered | Not considered. Condors in the area would be incidental, and would likely avoid the highway and adjacent forested areas. |
| Mexican spotted owl (*Strix occidentalis lucida*) | Threatened | Not considered. Owls are not likely to be impacted by project activities due to the lack of suitable canyon habitat within or near the project area. The nearest critical habitat is over 40 miles to the east of the project area. |
| Southwestern willow flycatcher (*Empidonax traillii extimus*) | Endangered | Not considered. Mature riparian vegetation is present along Huntington Creek; however, a dense understory suitable for nesting is not present. |
| Yellow-billed cuckoo (*Coccyzus americanus*) | Threatened | |
| Utah prairie dog (*Cynomys parvidens*) | Threatened | Not considered. Based on the USFWS Survey Intensity Map, Utah prairie dog do not occur in the project area. The nearest habitat to require surveys is over 29 miles to the southwest. |
| Bonytail chub (*Gila elegans*) | Endangered | Not considered. The four listed fish species do not occur within the project area, but Huntington Creek eventually flows into the Green River, which is designated critical habitat for each of the species. Critical habitat for these species is over 50 miles downstream. Implementation of best management practices will reduce impacts to water quality; the project will have no impact on these species. |
| Colorado pikeminnow (*Ptychocheilus lucius*) | Endangered | |
| Humpback chub (*Gila cypha*) | Endangered | |
| Razorback sucker (*Xyrauchen texanus*) | Endangered | |
| Barneby reed-mustard (*Schoenocrambe barnebyi*) | Endangered | Not considered. This species is mainly known to occur in Capitol Reef National Park; the project will not impact this species. |
| Jones cycladenia (*Cycladenia humilis var. jonesii*) | Threatened | Not considered. The project area does not include the known suitable habitat characteristics for this species. |
| Last chance townsendia (*Townsendia aprica*) | Threatened | Not considered. The project area does not include the known suitable habitat characteristics for this species. |
| San Rafael cactus (*Pediocactus despainii*) | Endangered | Not considered. The project area does not include the known suitable habitat characteristics for this species. |
| Winkler cactus (*Pediocactus winkleri*) | Threatened | Not considered. The project area does not include the known suitable habitat characteristics for this species. |
| Wright fishhook cactus (*Sclerocactus wrightiae*) | Endangered | Not considered. The project area does not include the known suitable habitat characteristics for this species. |

## Listed Species Carried Forward

The proposed project will not affect listed species or critical habitat. A “No Effect” determination is made for listed species.

## Sensitive Species that May Be Present

The sensitive species that may occur or have suitable habitat in and/or around the project area are shown in Table 2.

**Table 2. Regional sensitive species that may occur or have suitable habitat in or around the Deer Creek Mine Closure Water Pipeline Project.**

| Species | Habitat suitability or known occurrences of listed species in or near the project area | Species to be analyzed further? (Yes or No)* |
|---|---|---|
| Bald eagle (*Haliaeetus leucocephalus*) | Area may be used incidentally for foraging or scavenging, mainly during the winter. | **Yes** |
| Bighorn sheep (*Ovis canadensis*) | Project area is outside the UDWR-mapped range of desert bighorn and Rocky Mountain bighorn sheep. | No |
| Flammulated owl (*Otus flammeolus*) | Potentially suitable nesting and foraging habitat exists within the project area. | **Yes** |
| Greater sage-grouse (*Centrocercus urophasianus*) | Suitable sagebrush habitat does not exist within the project area. The nearest UDWR-mapped habitat is over 2 air miles away. | No |
| Northern goshawk (*Accipiter gentilis*) | Potentially suitable nesting and foraging habitat exists within the project area. | **Yes** |
| Peregrine falcon (*Falco peregrinus anatum*) | Potentially suitable cliff nesting and foraging habitat exists within the project area. | **Yes** |
| Spotted bat (*Euderma maculatum*) | Potential cliff roosting habitat is adjacent to the project area. Potential foraging habitat exists within the project area. | **Yes** |
| Three-toed woodpecker (*Picoides dorsalis*) | Coniferous habitat above 8,000 feet in elevation does not exist within the project area. | No |
| Townsend's big-eared bat (*Corynorhinus townsendii*) | Potential roosting and foraging habitat exists within the project area. | **Yes** |
| Colorado River cutthroat trout (*Oncorhynchus clarki pleuriticus*) | These fish are known to occur in Huntington Creek; however, the proposed project will not impact the creek or aquatic habitats. | No |
| Bonneville cutthroat trout (*Oncorhynchus clarki Utah*) | Does not occur in Huntington Creek | No |
| Southern leatherside chub (*Lepidomeda aliciae*) | Does not occur in Huntington Creek | No |
| Columbia spotted frog (*Rana luteiventris*) | No known occurrences on the Forest | No |

| Species | Habitat suitability or known occurrences of listed species in or near the project area | Species to be analyzed further? (Yes or No)* |
|---|---|---|
| Boreal toad (*Bufo boreas boreas*) | Although the species has been observed between the left and right forks of Rilda Canyon, suitable wet habitat does not occur within the project area. | No |
| Chatterley Onion (*Allium geyeri var. chatterleyi*) | Based on review of the Utah Natural Heritage Program and existing GIS data, there are no known occurrences of sensitive plant species in or around the project area, nor does suitable habitat occur in the area. | No |
| Sweet-flowered rock jasmine (*Androsace chamaejasme* ssp. *carinata*) | | |
| Link Trail columbine (*Aquilegia flavescens var. rubicunda*) | | |
| Isely's milkvetch (*Astragalus iselyi*) | | |
| Creutzfeldt-flower cryptanth (*Cryptantha creutzfeldtii*) | | |
| Pinnate spring-parsley (*Cymopterus beckii*) | | |
| Abajo peak draba (*Draba abajoensis*) | | |
| Abajo daisy (*Erigeron abajoensis*) | | |
| Carrington daisy (*Erigeron carringtonae*) | | |
| Kachina daisy (*Erigeron kachinensis*) | | |
| LaSal daisy (*Erigeron mancus*) | | |
| Canyon sweetvetch (*Hedysarum occidentale var. canone*) | | |
| Canyonlands lomatium (*Lomatium latilobum*) | | |
| Arizona willow (*Salix arizonica*) | | |
| Musinea groundsel (*Senecio musiniensis*) | | |

| Species | Habitat suitability or known occurrences of listed species in or near the project area | Species to be analyzed further? (Yes or No)* |
|---|---|---|
| Maguire campion (*Silene petersonii*) | | |
| ***Yes** - The proposed project's potential effects on these species will be further analyzed in this document.<br>*No – No further analysis is necessary, and a determination of "no impact" is made. | | |

# Current Management Direction

Current policy as stated in the Forest Service Manual (FSM 2670.32) includes the following:

1. Assist states in achieving their goals for conservation of endemic species.
2. Review programs and activities as part of the National Environmental Policy Act of 1969 process through a Biological Evaluation, to determine their potential effect on sensitive species.
3. Avoid or minimize impacts to species whose viability has been identified as a concern.
4. Analyze, if impacts cannot be avoided, the significance of potential adverse effects on the population or its habitat within the area of concern and on the species as a whole.
5. Establish management objectives in cooperation with the states when projects on National Forest system lands may have a significant effect on sensitive species, population numbers, or distributions. Establish objectives for Federal candidate species, in cooperation with FWS or NOAA Fisheries and the states.

# Existing Environment

The existing environment within the project action area includes riparian vegetation adjacent to Huntington Creek, cliff habitat through both canyons, and mature conifers within Rilda Canyon. Most areas of direct disturbance have been previously disturbed by roadways or utilities.

## Species

**Bald eagle**: No bald eagles are known to nest on the Ferron-Price Ranger District. Open habitats with available carrion could exist within the project area. Bald eagles may fly over the area and roost or perch incidentally, mainly from November through March.

**Flammulated owl**: Flammulated owls may nest in the mature forest at the bottom of Rilda Canyon, and could forage within the project area.

**Northern goshawk**: Goshawks may nest in the mature forest at the bottom of Rilda Canyon, and could forage within the project area.

**Peregrine falcon**: Potentially suitable cliff nesting habitat occurs in both Rilda and Huntington Canyons. The project area includes riparian habitat, which may provide prey for foraging falcons.

**Spotted bat**: Potential cliff roosting habitat occurs in both Rilda and Huntington Canyons. Foraging may occur throughout the riparian area.

**Townsend's big-eared bat**: Potential cavern roosting habitat is not known within the project area. Foraging may occur throughout the riparian project area.

## Direct and Indirect Effects of the Proposed Action

Up to 6.98 acres of potentially suitable habitat for sensitive species could be disturbed by implementation of the proposed project; actual impacts would likely be much less because the minimal amount of right-of-way would be cleared. In addition, a portion of the proposed right-of-way overlaps with existing roadway disturbance, which is un-vegetated and does not provide habitat value. Direct impacts to sensitive wildlife species could occur with the removal of up to 6.98 acres of vegetation on National Forest System lands that may provide suitable habitat for foraging or nesting. Habitat effectiveness in the area is likely decreased due to the existing road and associated disturbance. Disturbance to wildlife due to noise or the presence of equipment and personnel could occur, but is unlikely as most animals would likely be habituated to some level of disturbance from the existing road. Potential disturbance from construction would be short-term, and most animals would likely avoid areas where project activities were occurring. Temporary displacement would be short-term and during construction (2-3 months).

**Bald eagle**: The project area is within a forested landscape, which provides little adequate open terrain for foraging eagles. Bald eagles may fly over the project area, but would likely not remain in areas with disturbance from project activities. The proposed action would not adversely impact bald eagles.

**Flammulated owl**: Flammulated owls could occur in the project area, although suitable habitat is marginal due to proximity with the roadway and limited mature forest stands within the canyons. Disturbance could occur, but is unlikely as the proposed activities would occur during the day, when the nocturnal owls are roosting. If owls were to pass through the area at night, they would likely not be disturbed by project activities. The proposed action would not adversely impact flammulated owls.

**Northern goshawk**: Goshawks could occur in the project area, although suitable habitat is marginal due to proximity with the roadway and limited mature forest stands within the canyons. Disturbance from the proposed activities could impact goshawks if they happened to be nesting nearby, but would not cause nest abandonment as all young should be fledged and highly mobile by the time the project begins in September. Disturbance to goshawks inhabiting the area is unlikely as the birds would be habituated to noise and human presence from the existing roadway. The proposed action would not adversely impact northern goshawks.

**Peregrine falcon**: Disturbance from the proposed activities could impact falcons if they happened to be nesting nearby, but would not cause nest abandonment as all young should be fledged and highly mobile by the time project activities begin in September. In the event that a peregrine falcon was foraging in the area, suitable foraging habitat does exist. Disturbance to foraging peregrine falcons could occur as a result of the proposed activities, but is unlikely as peregrine falcons would avoid areas where project activities were occurring or the birds would likely be habituated to noise and human presence from the existing roadway. The proposed action would not adversely impact peregrine falcons.

**Spotted bat and Townsend's big-eared bat**: Bats may forage within the project area. Suitable foraging habitat exists along the extent of the riparian project area. There is little risk of disturbance from the proposed activities because these bats are nocturnal, and the proposed activities would occur during the day. If bats were to pass through the area at night, they would not be disturbed by project activities. The proposed action would not adversely impact spotted or Townsend's big-eared bats.

## Interrelated and Interdependent Effects

The project is not part of a larger action, nor would any other actions be dependent upon this project; therefore, there are no interrelated or interdependent effects of the proposed action.

## Cumulative effects

Non-federal activities that are likely to occur within the action area and that have potential to cause cumulative effects include maintenance or installation of utility lines in both canyons, and future work on the existing roadways. Cumulatively, these past and future actions will contribute to the ongoing development and associated disturbance within the project area. Due to the magnitude of existing disturbance, implementation of the proposed action will not result in cumulative adverse impacts to sensitive species.

## Conclusion and Determination of Effect

As a result of this analysis, it is our professional determination that implementation of the proposed action may impact individuals or habitat of all sensitive species analyzed in this document, but will not likely contribute to a trend toward federal listing or cause a loss of persistence to these populations or species.

## Management Recommendations

Implement agreed upon habitat conservation assessments, strategies, and agreements. If, during implementation efforts, any of the species analyzed are observed, a detailed location will be provided to the appropriate district wildlife biologist.

# Appendix A. Maps

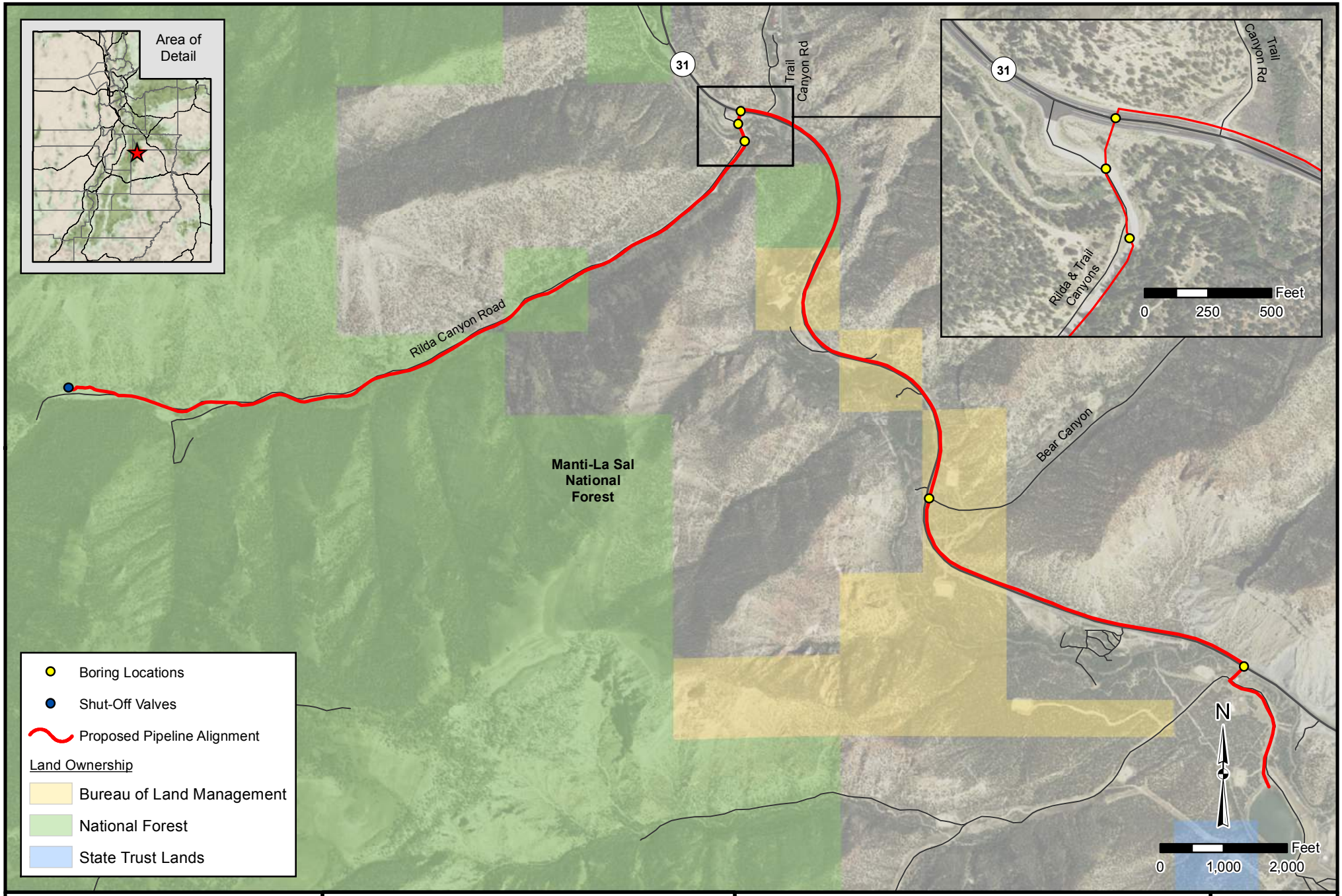


GIS

Jones & DeMille Engineering

*- infrastructure professionals -*

800.748.5275 www.jonesanddemille.com

**PacifiCorp**

***Deer Creek Mine - Proposed Live Water Relief Pipeline Overview***

Map Name: H:\JD\Proj\1506-121\Design\GIS\Maps\USFS\1_Overview.mxd

Project Number: 1506-121 | Drawn by: JWW 09-16 | Last Edit: 09/19/2016

**EMERY COUNTY**

SCALE: 1 " = 2,000 '

**1**

# Appendix F. Visual Contrast Rating Worksheet

Form 8400-4
(September 1985)

UNITED STATES
DEPARTMENT OF THE INTERIOR
BUREAU OF LAND MANAGEMENT

# VISUAL CONTRAST RATING WORKSHEET

Date 5-11-2016

District Green River, Price Field Office

Resource Area Huntington Canyon

Activity (program)
Buried pipeline construction

## SECTION A. PROJECT INFORMATION

1. Project Name
Deer Creek Mine Pipeline

2. Key Observation Point
SR-31

3. VRM Class
II

4. Location
Township 16 S
Range 7 E
Section 27

5. Location Sketch
See attached photos

## SECTION B. CHARACTERISTIC LANDSCAPE DESCRIPTION

| | 1. LANDWATER | 2. VEGETATION | 3. STRUCTURES |
|---|---|---|---|
| FORM | Sinuous road along canyon bottom with steep to vertical cliffs. | Complex; strips of brush and shrubs follow the curve of the canyon, with taller cottonwoods and conifers next to the creek. | Horizontal roadway is flat, vertical guardrails and delineators are low and weak. |
| LINE | Bold vertical lines of the canyon walls dominate weak horizontal lines and curving canyon bottom and road. | Weak horizontal lines created by changes in vegetative patterns, with vertical conifers irregularly spaced. | Roadway line is continuous, vertical features are compatible. |
| COLOR | Light to dark yellow to gray canyon walls and gray roadway surface. | Muted sage green, yellows, and browns, darker green conifers. | Gray roadway surface, white and silver guardrails and delineators. |
| TEXTURE | Medium grain variations in rugged cliffs, fine grain variation in smooth roadway surface. | Medium coarseness in immediate foreground to smooth middleground. | Uniform guardrail and posts create medium ordered contrast, but subordinate to surroundings. |

## SECTION C. PROPOSED ACTIVITY DESCRIPTION

| | 1. LANDWATER | 2. VEGETATION | 3. STRUCTURES |
|---|---|---|---|
| FORM | New pipeline ROW will be distinct and simple, but subordinate to vertical features. | Revegetated ROW will be simple, horizontal as early seral species establish. | Posts and air vents will be distinct, simple, and consistent with natural and existing man-made features. |
| LINE | New ROW edge will be distinct, simple, and horizontal. | Weak horizontal line will be subordinate to complex lines surrounding the area. | Vertical features are compatible. |
| COLOR | No change anticipated due to previous soil disturbance. | No change. | Air vents and Carsonite posts will be colored to best match natural colors in the canyon. |
| TEXTURE | Surface variations will be directional and continuous, subordinate to surroundings. | Fine-grained early seral species will be subordinate to more complex vegetation surrounding the road. | No change. |

## SECTION D. CONTRAST RATING ☒ SHORT TERM ☐ LONG TERM

1. DEGREE OF CONSTRAST

| | | FEATURES | | | | | | | | | | | |
|---|---|---|---|---|---|---|---|---|---|---|---|---|---|
| | | LANDWATER BODY (1) | | | | VEGETATION (2) | | | | STRUCTURES (3) | | | |
| | | Strong | Moderate | Weak | None | Strong | Moderate | Weak | None | Strong | Moderate | Weak | None |
| ELEMENTS | Form | | | x | | | | x | | | | x | |
| | Line | | | x | | | | x | | | | x | |
| | Color | | | | x | | | | x | | | x | |
| | Texture | | | x | | | | x | | | | | x |

2. Does project design meet visual resource management objectives? ☒ Yes ☐ No (Explain on reverse side)

3. Additional mitigating measures recommended? ☐ Yes ☒ No (Explain on reverse side)

Evaluator's Names
Jenna Jorgensen

Date
5-11-2016

## SECTION D. (Continued)

Comments from item 2.

Construction activities will result in a brief (2 to 5 minute) visual disturbance to the casual observer as they travel the roadway. The lines created by the excavation for the pipeline will create a contrast that will attract attention for that brief travel time; however, the bold vertical lines of the canyon walls will still dominate the view. As reseeded vegetation establishes and matures, visual contrast of the disturbed right-of-way will decrease. The level of change to the landscape will be low; changes will repeat the basic elements found in the predominant natural features. Therefore, the project will meet or exceed Class II objectives to retain the existing character of the landscape.

Additional Mitigating Measures (See item 3)

Reclamation of disturbed areas is a feature of the proposed action; no additional mitigation measures have been identified as feasible or effective.

U.S. GOVERNMENT PRINTING OFFICE: 1985-461-988/33094

# DEER CREEK MINE

# VOLUME 12

# MILL FORK LEASE

**R645-301-700**

**HYDROLOGY**

# APPENDIX E

**DEER CREEK MINE CLOSURE WATER PIPELINE**

- **UTU-91700 and PRI-1606 – Final Environmental Assessment**
  - **Draft FONSI**

United States Department of Agriculture

Forest Service

**Intermountain Region**

September 2016

# DRAFT - Decision Notice & Finding of No Significant Impact

## DEER CREEK MINE CLOSURE WATER PIPELINE
## UTU-91700
## U.S. Forest Service

**Rilda and Huntington Canyons**
**Manti-La Sal National Forest**
**Emery County, Utah**


For Information Contact:

Jeff Salow
USDA Forest Service
Manti-La Sal National Forest
Supervisors Office
599 West Price River Drive
Price, Utah 84501
(435) 636-359

In accordance with Federal civil rights law and U.S. Department of Agriculture (USDA) civil rights regulations and policies, the USDA, its Agencies, offices, and employees, and institutions participating in or administering USDA programs are prohibited from discriminating based on race, color, national origin, religion, sex, gender identity (including gender expression), sexual orientation, disability, age, marital status, family/parental status, income derived from a public assistance program, political beliefs, or reprisal or retaliation for prior civil rights activity, in any program or activity conducted or funded by USDA (not all bases apply to all programs). Remedies and complaint filing deadlines vary by program or incident.

Persons with disabilities who require alternative means of communication for program information (e.g., Braille, large print, audiotape, American Sign Language, etc.) should contact the responsible Agency or USDA's TARGET Center at (202) 720-2600 (voice and TTY) or contact USDA through the Federal Relay Service at (800) 877-8339. Additionally, program information may be made available in languages other than English.

To file a program discrimination complaint, complete the USDA Program Discrimination Complaint Form, AD-3027, found online at http://www.ascr.usda.gov/complaint_filing_cust.html and at any USDA office or write a letter addressed to USDA and provide in the letter all of the information requested in the form. To request a copy of the complaint form, call (866) 632-9992. Submit your completed form or letter to USDA by: (1) mail: U.S. Department of Agriculture, Office of the Assistant Secretary for Civil Rights, 1400 Independence Avenue, SW, Washington, D.C. 20250-9410; (2) fax: (202) 690-7442; or (3) email: program.intake@usda.gov.

USDA is an equal opportunity provider, employer and lender.

# Draft Decision Notice for the Deer Creek Mine Closure Water Pipeline

## Introduction

This Decision Notice (DN) document describes my rationale and decision regarding the proposed Deer Creek Mine Closure Water Pipeline on the Ferron District of the Manti-La Sal National Forest. My Decision and findings are based on the analysis documented in the Deer Creek Mine Closure Water Pipeline Environmental Assessment (EA) (BLM - USDA FS 2016) and it's supporting project record which is incorporated by reference into this document. The analysis and decision tier to the Manti-La Sal National Forest Final environmental Impact Statement and the Manti-La Sal National Forest Land and Resource Management Plan (USDA Forest Service 1986 as amended).

## Background

On May 11, 2016, PacifiCorp submitted an SF-299 application for a right-of-way (ROW) for the construction of a pipeline that would convey intercepted groundwater from the Deer Creek Mine portal to a settling pond at the Huntington Power Plant.

The purpose of the pipeline is to provide for conveyance of intercepted groundwater to a permitted discharge location outside of Category 1 waters, which will allow for final closure and reclamation of the mine, and to avoid potential contamination of water resources on federal lands due to water with high levels of iron filling the mine and naturally flowing out of the portals in Rilda Canyon.

The Deer Creek Mine has completed active coal mining and is undergoing mine closure procedures. As part of the closure procedures, the mine must address the management of intercepted groundwater. Deer Creek Mine is projected to have permanent post-mine gravity discharges at Deer Creek Canyon portals (south half of mine), and at Rilda Canyon portals (north half of mine) after final mine closure. Water that meets the water quality standards set by State of Utah Division of Water Quality (UDWQ) may be discharged under Utah Pollutant Discharge Elimination System (UPDES) permits at certain mine portals. If the water is out of compliance with water quality standards it must be treated before being discharged. Based on the location of intercepted water, elevation, and the current mine workings, it is projected that some of the intercepted water would naturally flow out of the Rilda Canyon Portals. However, a discharge permit cannot be issued for the Rilda Canyon portals because the Rilda Canyon portals are within Category 1 per Utah Admin Code (UAC) R317-2. Therefore, appropriate management of the intercepted groundwater must be established to allow for the mine to cease operations, seal the mine, and complete the reclamation process as set forth in the Utah Division of Oil, Gas and Mining (UDOGM) permit and FS regulations.

The original preferred plan was to build water-retaining bulkheads to contain all of the intercepted groundwater in the underground mine workings in perpetuity. Efforts undertaken since late 2014 to obtain permission from the Mine Safety and Health Administration (MSHA) and the UDOGM to permanently retain intercepted groundwater underground with concrete bulkheads and possibly to direct overflow water to the Deer Creek Canyon were rejected in April of 2016. MSHA and UDOGM will not allow any water retention as part of the Deer Creek closure plans; water must be directed to the portals to flow unimpeded out of the mine. This response by the agencies necessitates that PacifiCorp develop other alternatives to manage intercepted groundwater that would otherwise discharge from the Rilda Canyon portals in violation of UAC R317-2.

## Decision

After considering information provided in the EA, comments received from the public and other entities, and internal input from an interdisciplinary team of Forest Service and Bureau of Land Management Recourse Specialists, I have selected the Proposed Action for implementation on National Forest lands. The proposed action is the installation of a pipeline to transport water on Forest land in Emery County, Utah. This decision authorizes the issuance of a Special Use Permit (SUP) for construction and maintenance of the new pipeline. The SUP will be valid for 30 years. PacifiCorp proposes to construct 5.6 miles of a 10-inch high-density polyethylene (HDPE) gravity flow water pipeline from the Deer Creek Mine 1st Right Portals to a settling pond at Huntington Power Plant. The pipeline would be constructed within the existing Emery County Road #306 right-of-way for 12,553 feet (2.4 miles), and within the State Route (SR)-31 right-of-way (UTU-0-17187) for 14,537 feet (2.8 miles). The route was selected to minimize new disturbance in Rilda and Huntington Canyons. The proposed action would result in the disturbance of up to 7.0 acres of USFS-administered land, 4.7 acres of BLM-administered land, and 10.1 acres of private land (21.8 acres total), all parallel to existing roadways and largely within existing road rights-of-way. The disturbance would include clearing a portion of the temporary right-of-way for work access and excavation of a trench to install the pipeline. The trench would be from 3 to 7 feet wide and over 6 feet deep. Temporary erosion control measures could include sediment barriers such as silt fence or fiber rolls. Permanent erosion control measures would include trench breakers and revegetation with a native seed mixture within the disturbed rights-of-way. Directional drilling would be applied at road crossings and Bear Creek to avoid impacts to the roadway surface and the stream channel. The pipeline would be attached to existing structures at the Huntington Creek crossings; the proposed design avoids impacts within active channel. No new roads are proposed as the project would be accessed by the existing adjacent roadways. Project activities are anticipated to occur over 3 months in the fall and winter of 2016.

## Decision Rationale

In reaching my decision, I have sought to carefully and objectively assess all the public comments and the analysis of issues disclosed in the EA. The concerns from the public generally focused on water quality issues. To maintain the water quality in Huntington creek, any discharge of water into Huntington Creek is governed by Utah Pollutant Discharge Elimination System (UPDES) permits and UDWQ. The transport of the water to the power plant settling pond is considered to be an acceptable option by the governing agencies because discharge would be in compliance with the existing permits. PacifiCorp has collected and had a laboratory analyze the intercepted groundwater samples from areas within the mine that will gravity flow to the Rilda Canyon portals utilizing the EPA Priority Pollutant List, which consists of 129 priority pollutants (USDA FS 2016b). None of the pollutant parameters were detected. The intercepted groundwater in the mine is estimated to initially have a total iron concentration is 2-2.5 mg/L and an estimated TDS concentration of 500 mg/L. The elevated levels of iron in the groundwater is from the oxidation of the mineral pyrite in areas of the mine that contain pyrite mineralization within the coal seam. A gradual decrease in the concentration of iron is predicted to occur over the next 5 to 10 years as the surface area of exposed pyrite is consumed and available oxygen diminishes. The concentration of iron is the only elevated analyte in the mine's groundwater that exceeds water quality standards for PacifiCorp's Deer Creek Canyon discharge permit (UT0023604). At the discharge location in the settling pond on private land the elevated levels of iron in the intercepted water may cause some orange-rust discoloration of the sediment or the rocks as the iron hydroxide and other ferric solids precipitate out. (USDA FS 2016b).

When compared to the No Action alternative, the proposed action would best meet the purpose and need of the project discussed above. Specifically, the proposed action would meet the need to manage the intercepted groundwater and allow for the closure of Deer Creek Mine. Under the No Action alternative, intercepted groundwater would continue to be managed through pumping and the mine would remain open. The mine would not proceed with final closure and reclamation activities until proper water management methods were determined.

## Other Alternatives Considered

Federal agencies are required through NEPA to explore and objectively evaluate all reasonable alternatives and to briefly discuss the reasons for eliminating any alternatives that were not developed in detail (40 CFR 1502.14). This EA fully developed the Proposed Action and the No Action Alternatives.

The no action alternative would be to deny the right-of-way application as proposed. PacifiCorp would not be allowed to construct the pipeline across federally administered lands. The Deer Creek Mine would remain open to continue pumping the water until other suitable methods for management the intercepted groundwater were determined

Alternatives that were dismissed from further consideration include:

1. **Retain water in the mine for discharge at Deer Creek portals** – MSHA and UDOGM will not allow water to be retained in the mine; therefore, this alternative is not feasible.
2. **Treat the water prior to discharge at the Rilda Canyon portals** - Regardless of water quality, discharge of water at the Rilda Canyon portals is prohibited per UAC R317-2; therefore, this alternative is not feasible.
3. **Treat the water at the Rilda Canyon Portals and then pipe the water to Huntington Creek** This alternative would require additional surface disturbance to build new settling ponds on public lands, and would still require a pipeline to convey water to a permitted discharge location per UAC R317-2. This alternative was not analyzed in detail due to the additional disturbance that would be required on public lands.
4. **Construct a pumping station at Rilda Canyon portals and pipe the water to Left Fork portals** - A pumping station would be built at the Rilda Canyon 1st Right portals. A pipeline would be installed running from this pump station to the Left Fork portals. Water discharging at the 1st Right Rilda Canyon portals would be pumped back into the mine at the Left Fork portals, where it would gravity feed into the Deer Creek Mine workings. This alternative requires a pipeline and permanent pumping facilities, namely the pump station, power lines, and communication lines, to be constructed at the mine site on FS-administered land. These facilities would require permanent periodic maintenance. Risk associated with equipment failure and discharge of non-approved and potentially non-compliant water to Rilda Canyon is considered to be moderate. This alternative was not analyzed in detail due to the additional disturbance that would be required on public lands.
5. **Construction of a water treatment facility at the Huntington Power Plant** This alternative would require additional disturbance near the power plant similar to what would occur if discharge water were treated on federal lands. This disturbance is not considered to be necessary as discharge can be properly managed using existing facilities like the settling pond at the power plant. This alternative was not analyzed in detail because of the additional disturbance that is unnecessary for proper management of the water.
6. **Extension of the water pipeline to the Town of Huntington's sewer treatment plant or next closest existing treatment plant** – The closest existing treatment plant is farther down the canyon from the power plant. To pipe the water all the way to the treatment plant, would require additional disturbance. The intercepted groundwater currently does not have elevated levels of any of the EPA's priority pollutants. The only elevated levels are for iron. This alternative was determined impractical due to the additional disturbance on federal lands.

## Public Involvement

As described in the background, the need for this action arose on May 11, 2016. A scoping letter describing the proposed project and soliciting comments was sent by the FS, in cooperation with the BLM, to interested parties on June 13, 2016. These parties included local, state, and federal agencies, non-governmental organizations (NGOs), and the general public. On June 14, 2016, a legal notice of proposed action and request for comments was published in the Sun Advocate newspaper. The legal notice is the document that sets the comment period, which identifies those individuals or organizations that have objection rights for FS decisions. The public comment period closed on July 14, 2016. In addition, the BLM listed the information on the ePlanning website, and the FS listed the EA scoping information on the Schedule of Proposed Action (SOPA) website.

Using the comments from the public, other agencies, and Native American tribes (BLM - USDA FS 2016), the interdisciplinary team identified several issues regarding the effects of the proposed action. Main issues of concern included cultural resources (could be disturbed), National Trails and Backways (impacts to the Energy Loop National Scenic Byway [ELNSB]), recreation (impacts to recreation associated with ELNSB), soils (impacts due to soil disturbance), Visual Resources (visual resources on BLM-administered lands), water (surface water quality) and wildlife resources (several species use habitat in the Project Area and could be displaced). To address these concerns, the Forest Service analyzed the No Action alternative.

## Finding of No Significant Impact

After consideration of the environmental effects described in the EA, the project record, and as further documented in this decision notice, I have determined that this is not a major federal action individually or cumulatively that will significantly affect the quality of the human environment; therefore an Environmental Impact Statement is not needed. This determination is based on analysis of the context and intensity of the environmental effects, including the following factors:

Intensity: The following discussion is organized around the Ten Significance Criteria described in 40 CFR 1508.27. The following have been considered in my evaluation of intensity for this proposal:

1. **Impacts may be both beneficial and adverse.** Based on the evidence contained in the EA and its project record, the activities described in this decision do not include any significant adverse impacts to any resource (40 CFR 1508.27(b)(1). Implementation of my decision will not create significant resource commitments or any significant irretrievable losses of vegetation, soils, water, or wildlife and fish habitats. The project will employ project design features and incorporates Best Management Practices, Soil and Water Conservation Practices, and Forest Plan standard and guidelines that provide adequate protection of the forest resources. My finding of no significant environmental effects is not biased by the beneficial effects of the action.
2. **The degree to which the selected alternative will affect public health or safety.** There will be no significant effects on public health and safety from the installation of the pipeline, because the intercepted groundwater would be properly managed in accordance to PacifiCopr's UDWQ discharge permits (BLM - USDA FS 2016).
3. **Unique characteristics of the geographic area such as proximity to historic or cultural resources, park lands, prime farm lands, wetlands, wilderness, wild and scenic rivers, or ecologically critical areas.** There will be no significant effects on unique or ecologically critical areas because the Project Area is not in proximity to any park lands, prime farmlands, wetlands, or wild and scenic rivers. This assertion is based on field surveys of the Project Area and information contained in the project record and in the EA (BLM - USDA FS 2016).
4. **The degree to which the effects on the quality of the human environment are likely to be highly controversial**. The effects on the quality of the human environment are not likely to be highly controversial. Controversy in this context refers to the situations where there is substantial

dispute as to the size, nature or effect of the federal action rather than opposition to its implementation. The scientific basis for the analysis is contained in the project record and summarized in the EA. The effects of the project are limited to the project area. There are no known scientific controversies over the impact of the project. While some individuals have disagreed with the implementation of the project, no evidence has been provided that indicates that the environmental effects of the project have been wrongly predicted; therefore the effects are not highly controversial.

5. **The degree to which the possible effects on the human environment are highly uncertain or involve unique or unknown risks.** The effects analysis shows the effects are not uncertain, and do not involve unique or unknown risk (BLM - USDA FS 2016). The selected alternative is well defined and located over a limited area. The Forest Service has extensive past experience with successful implementation of buried pipelines and the environmental effects associated with that action.
6. **The degree to which the action may establish a precedent for future actions with significant effects or represents a decision in principle about a future consideration.** The action is not likely to establish a precedent for future actions with significant effects, because utilities installations are an ongoing practice in the area and the construction of this pipeline is a stand-alone project that would not preclude the consideration and advancement of other utility upgrade proposals. Future actions would be evaluated through the NEPA process and would stand on their own as to the environmental effects and project feasibility.
7. **Whether the action is related to other actions with individually insignificant but cumulatively significant impacts.** All known actions, which have occurred or are likely to occur in the reasonably foreseeable future were considered in the analysis. These are documented in the supporting specialist's reports in the Project Record and in the EA. Analysis considered direct, indirect and cumulative effects of the proposal. There are no significant cumulative effects (BLM - USDA FS 2016).
8. **The degree to which the action may adversely affect districts, sites, highways, structures, or other objects listed in or eligible for listing in the National Register of Historic Places or may cause loss or destruction of significant scientific, cultural, or historical resources**. The action will have no effect on districts, sites, highways, structures, or objects listed in or eligible for listing in the National Register of Historic Places, nor will it cause loss or destruction of significant scientific, cultural, or historical resources, because avoidance, mitigation, or monitoring would be conducted to ensure that no direct impacts occur (BLM - USDA FS 2016). A total of ten sites are known to be located within the area of potential effect. Of these sites, two were determined eligible for the National Historic Register in 1985; however, both were excavated in 1986 and reburied outside the road right-of-way, on Emery County property. Two new sites were recorded in 2016; these are recommended as ineligible to the National Historic Register. The remaining six sites were previously determined to be ineligible for listing to the National Historic Register.
9. **The degree to which the action may adversely affect an endangered or threatened species or its habitat that has been determined to be critical under the Endangered Species Act of 1973, or the degree to which the action may adversely affect a proposed to be listed endangered or threatened species or its habitat.** The action will not adversely affect any endangered or threatened species or its habitat that has been determined to be critical under the Endangered Species act of 1973, because it was determined that the Project would have "No Effect" on any TECP species. (BLM - USDA FS 2016; USDA FS 2016a).
10. **Whether the action threatens a violation of a federal, state, local, or tribal law, regulation or policy imposed for the protection of the environment, where non-federal requirements are consistent with federal requirements.** The action will not violate Federal, State, and local laws or requirements for the protection of the environment. Applicable laws and regulations were

considered in the EA (BLM - USDA FS 2016). The action is consistent with the Manti-La Sal Land and Resource Management Plan (BLM - USDA FS 2016).

## Findings Required by Other Laws and Regulations

This decision to install a water pipeline is consistent with the intent of the forest plan's long term goals and objectives (Manti-La Sal Land and Resource Management Plan, pages III-2 to III-5). The project was designed in conformance with land and resource management plan standards and incorporates appropriate land and resource management plan guidelines for cultural resource management, visual resource management, wildlife and fish resource management, wildlife habitat improvement and maintenance, and management prescriptions for utility corridors (Manti-La Sal Land and Resource Management Plan, pages III-2 to III-5).

### NATIONAL FOREST MANAGEMENT ACT

National Forest management must be consistent with Forest Plans prepared under authority of the National Forest Management Act (NFMA), 16 U.S.C. 1604 and 36 CFG 219.10(f). The Act requires the Secretary of Agriculture to assess forest lands, develop a management program based on multiple-use, sustained-yield principles, and implement a resource management plan for each unit of the National Forest System. The Manti-La Sal Land and Resource Management Plan was approved November 5 1986, as required by this Act. The land and resource management plan provides guidance for all resource management activities on the Forest (USDA FS 1986). This proposal is consistent with Forest Plan goals, objectives, and standards and guidelines. This EA and supporting documents, including specialist's reports in the Project Record document interdisciplinary review as required by NEPA.

### ENDANGERED SPECIES ACT

The Endangered Species Act of 1973, as amended, provides a program for the conservation of threatened and endangered (TE) plants and animals and the habitats in which they are found. A Biological Assessment consistent with the requirements of the ESA was prepared for the action alternative. (USDA FS 2016a). The proposed project will not affect listed species or critical habitat. A "No Effect" determination was made for listed species with potential to occur within the project area.

### MIGRATORY BIRD TREATY ACT

The Migratory Bird Treaty Act implements various bilateral treaties and conventions between the U.S. and four other countries for the protection of migratory birds. Under the Act, taking, killing or possessing migratory birds is unlawful (USDA FS 2016a). Migratory birds were considered in the EA. It was determined that birds in the area would likely be habituated to noise and human presence from the existing roadway. Habitat effectiveness would be temporarily decreased, but only slightly, when considering the existing disturbance and habitat modification.

### NATIONAL HISTORIC PRESERVATION ACT

The National Historic Preservation Act of 1966 created the Advisory Council on Historic Preservation (ACHP) to advice on matters involving historic preservation. The ACHP is authorized to review and comment on all actions licensed by the Federal government which will have an effect on properties listed in the National Register of Historic Places Section 106 of the NHPA requires federal agencies to consider the effects of their activities and programs on historic properties. Cultural resource surveys have been completed for the area of potential effect and no effect would occur to properties listed in the National Register of Historic Places (BLM - USDA FS 2016).

### CLEAN WATER ACT, FLOODPLAIN MANAGEMENT (EXECUTIVE ORDER 11988), AND PROTECTION OF WETLANDS (EXECUTIVE ORDER 11990)

The Clean Water Act employs a variety of regulatory and non-regulatory tools to sharply reduce direct pollutant discharges into waterways, finance municipal wastewater treatment facilities, and manage polluted runoff. These tools are employed to achieve the broader goal of restoring and maintaining the chemical, physical, and biological integrity of the nation's waters so that they can support "the protection and propagation of fish, shellfish, and wildlife and recreation in and on the water." Executive Orders 11988 and 11990 require that executive agencies take special care when undertaking actions that may affect wetlands or floodplains, directly or indirectly, by avoiding the disruption of these areas wherever there is a practicable alternative and by minimizing any environmental harm that might be caused by federal actions. To reduce or prevent adverse impacts to water quality, a stormwater pollution prevention plan (SWPPP) and spill prevention and response plan (SPRP) would be prepared prior to initiation of ground disturbance. These plans would detail the best management practices and site-specific measures to prevent sediment and other pollutants from discharging into the creek during construction. Implementation of the SWPPP and SPRP would reduce sedimentation and the risk of pollution to surface waters during construction. For a list of the BMPs that would be implemented refer to the POD and the Hydrology Report (USDA FS 2016b). The discharge of the intercepted groundwater would be regulated by PacifiCorps existing UPDES permits.

### ENVIRONMENTAL JUSTICE (EXECUTIVE ORDER 12898)

In accordance with Executive Order 12898 (59 FR 32, 1994), the action alternatives were assessed to determine whether they would have disproportionately high and adverse human health or environmental effects, including social and economic effects, on minority or low-income human populations. No effects were identified during this analysis (BLM - USDA FS 2016).

## Predecisional Administrative Review Process

This draft Decision Notice and Finding of No Significant Impact (FONSI) is subject to a 45-day objection and review period as set forth by FS regulations at 36 CFR 218. Individuals, organizations, state and local governments, Indian Tribes, businesses and partnerships who have submitted timely, specific written comments regarding the project may file an objection. These comments must have been submitted during project scoping or during any other instance where the responsible official seeks written comments. Other federal agencies may not file objections.

The starting date for the 45-day objection and review period is the day after publication of the legal notice of this draft Decision Notice and FONSI in the newspaper of record for the Manti-La Sal National Forest, the Sun Advocate newspaper located in Price, Utah. The objection must be filed in writing with the Objection Reviewing Officer, Nora Rasure, Regional Forester for the FS Intermountain Region:

Objection Reviewing Officer
Intermountain Region USFS
324 25th Street, Ogden, Utah 84401
Fax to: 801-625-5277
Email to: objections-intermtn-regional-office@fs.fed.us

The objection must include the name, address and telephone number of the objector; the name of the proposed project; the name and title of the responsible official; and the name of the national forest and ranger district on which the proposed project will be implemented. The objection must contain a description of those aspects of the project addressed by the objection, including:

Specific issues related to the proposed project

- If applicable, an explanation of how the objector believes the environmental analysis or draft decision specifically violates law, regulation or policy
- Suggested remedies that would resolve the objection
- Supporting reasons for the reviewing officer to consider
- A statement that demonstrates the connection between prior written comments on the particular project or activity and the content of the objection, unless the objection concerns an issue that arose after the designated opportunities for comment

If an objection is filed, the reviewing officer will respond in writing to the objection within 45-days following the end of the objection filing period. This period may be extended by an additional 30 days at the discretion of the reviewing officer.

Prior to issuance of the reviewing officer's written response to an objection, either the reviewing officer or the objector may request a meeting to discuss issues raised in the objection and potential resolution of the objection. After review of the objection, the reviewing officer will provide a written response to the objection. No further review from any other FS or US Department of Agriculture official of the reviewing officer's written response to the objection is available.

As the responsible official for this decision, I will not sign the Decision Notice until the reviewing officer has responded in writing to all objections and all concerns and instructions identified by the reviewing officer in the objection response have been addressed in accordance with the 36 CFR 218 regulations.

## Objection Review and Final Decision / Implementation

If no objections are filed within the 45-day Objection filling period, the Decision Notice may be signed on, but not before, the fifth business day following the end of the objection filing period. If an objection is filed, the reviewing officer will respond in writing to the objection within 45-days following the end of the objection filing period. This period may be extended by an additional 30 days at the discretion of the reviewing officer. The Decision Notice would not be signed until the reviewing officer has responded in writing to all objections and all concerns and instructions identified by the reviewing officer in the objection response have been addressed in accordance with the 36 CFR 218 regulations.

In either case, the project may begin immediately after the decision is signed. And according to the regulations (36 CFR 218) no legal notice is required once a Decision Notice is signed. However, the Forest Service may send out a letter or a news release to notify any interested parties on the availability of the decision documents.

## Contact Person

For additional information concerning this decision or the Forest Service appeal process, contact Jeff Salow, Supervisor's Office, 599 West Price River Drive, Price, UT 84501, (435) 636-3596.

## Signature / Approval by Responsible Official

_____ _____

Brian M. Pentecost Date
Forest Supervisor
Manti-La Sal National Forest

## Literature Cited

BLM – USDA FS. 2016. Deer Creek Mine Closure Water Pipeline UTU-91700 and PRI-1606 Environmental Assessment.

USDA Forest Service. 1986. Manti-La Sal National Forest Land and Resource Management Plan.

_____. 2016a. Biological Resources Report. Prepared by Jenna Jorgensen. September 16.

_____. 2016b. Hydrology Report. Prepared by Jeff Salow. September 16.

USDOI Bureau of Land Management. 2008. Price Field Office Resource Management Plan.

# DEER CREEK MINE

# VOLUME 12

# MILL FORK LEASE

**R645-301-700**

**HYDROLOGY**

# APPENDIX E

**DEER CREEK MINE CLOSURE WATER PIPELINE**

- **UTU-91700 and PRI-1606 – Final Environmental Assessment**
  - **Hydrology Report**

# Deer Creek Mine Closure Water Pipeline

## Hydrology Report

Prepared by:
Jeff Salow

for:
Ferron-Price Ranger District
Manti-La Sal National Forest

9/22/2016

Deer Creek Mine Closure Water Pipeline

Hydrology Report

The proposed pipeline alignment parallels Huntington Creek and the bottom of Rilda Canyon, which drains into Huntington Creek. A majority of the project area is within the Miller Fork Canyon-Huntington Creek 6th field Hydrologic Unit Code (HUC; 140600090105). The last mile of the project is within the Huntington Lake-Huntington Creek 6th field HUC (140600090107). Water from the Rilda portals would naturally gravity flow east through Rilda Canyon into Huntington Creek. A permit cannot be obtained to discharge mine groundwater at the portals because the water in Rilda Canyon is classified as category 1 waters: *Waters whose existing quality is better than the established standards for the designated uses will be maintained at high quality unless it is determined by the Director, after appropriate intergovernmental coordination and public participation in concert with the Utah continuing planning process, allowing lower water quality is necessary to accommodate important economic or social development in the area in which the waters are located* (Utah Administrative Code R317-2-3. Antidegradation Policy).

According to the 2016 DRAFT integrated report, Huntington Creek – 1, which includes Huntington Creek and its tributaries from the confluence with Cottonwood Creek to Highway 10 is on the 303d list due to impairment for elevated selenium (UDEQ 2016). Huntington Creek – 2 and 3, which includes Huntington Creek and its tributaries from Highway 10 to the USFS boundary is impaired for dissolved oxygen (DO), Total Dissolved Solids (TDS), temperature and pH (UDEQ 2016). Huntington Creek – 1 is down gradient from the proposed pipeline alignment. The proposed pipeline is within Huntington Creek – 2 and 3.

Locations within Huntington Creek-2 were sampled for Total Dissolved Solids (TDS), Iron, pH and selenium to establish initial baseline analysis in the 80's and 90's for PacifiCorp's Plant groundwater discharge permit (UGW150002). The average TDS concentration was 244 mg/L, the average iron concentration was 0.48 mg/L, the average pH value was 8.4, and selenium levels were less than 0.002 mg/l (Table 1). The Environmental Protection Agency (EPA) classifies TDS, iron and pH as secondary drinking water standards with a 500 mg/L for TDS a 0.3 mg/L threshold for iron and a pH ranging from 6.5–8.5. The maximum contaminant level (MCL) for selenium in drinking water defined by the EPA is 0.05 mg/L.

Table 1

| | TDS | Iron | pH | Selenium |
|---|---|---|---|---|
| EPA standard | 500 mg/L | 0.3 mg/L | 6.5-8.5 | 0.05 mg/L |
| 1980-1990's Huntington Creek 2 and 3 Average values | 244 mg/L | 0.48 mg/L | 8.4 | <.002mg/L |

Water from Huntington Creek is diverted into the settling pond at 7,000 to 10,000 gpm. Water from the settling pond is used for plant operations, cooling towers and boiler vents. The water is diverted from Huntington Creek at the same rate that it is used in the operations of the plant. Of the 7,000-11,000 gpm of water used in plant operations, approximately 97% of the water is evaporated off. The remaining 3% is transferred to the irrigation storage reservoir and used on crop research fields (Correspondence with PacifiCorp). The water used for irrigation on the research fields is regulated by the Utah Department of Environmental Quality, Division of Water Quality by authorization of a Ground Water Discharge Permit. The permit requires that water quality be measured periodically in monitoring wells in order to maintain compliance with the Ground Water Discharge Permit (UGW150002).

In addition to the Power Plant, Castle Valley Special Service District and the North Emery Water Users Special Service District use water in Huntington Canyon. Both these springs are a source of drinking water for adjacent municipalities and have source protection plans on file with the Utah Division of Drinking Water.

PacifiCorp has collected and had a laboratory analyze the intercepted groundwater samples from areas within the mine that will gravity flow to the Rilda Canyon portals utilizing the EPA Priority Pollutant List, which consists of 129 priority pollutants. None of the pollutant parameters were detected. PacifiCorp conducts baseline solute sampling of groundwater seepage in the mine once a month. Groundwater seepage in the mine is estimated to initially have a total iron concentration is 2-2.5 mg/L and an estimated TDS concentration of 500 mg/L. The elevated levels of iron in the groundwater is from the oxidation of the mineral pyrite in areas of the mine that contain pyrite mineralization within the coal seam. The gradual decrease in the concentration of iron is predicted to occur over the next 5 to 10 years as the surface area of exposed pyrite is consumed and available oxygen diminishes (memo PacifiCorp 2016). The concentration of iron is the only elevated analyte in the mines groundwater that exceeds water quality standards for PacifiCorp's Deer Creek Canyon discharge permit (UT0023604). All other chemical parameters are within permit limitations. The current discharge permit standard for iron is 1 mg/L. TDS less than 500 mg/L are allowed to be discharged, if concentrations exceed 500 mg/L, offset salinity credits to the State of Utah will be paid. The measured average pH of water within the mine is 7.5. The host rock has a high content of carbonate minerals which results in naturally high alkalinity levels in the ground water.

Intercepted groundwater has the potential to flow out of the Rilda Portals at an initial estimated flow rate of about 500-600 gpm (Correspondence with PacifiCorp). The amount of flow is expected to decrease with time because there is no active recharge from perched aquifers. Perched aquifers are isolated lenses of sandstone trapped between shales and mudstones. Groundwater seeps from these aquifers into the empty space of the Deer Creek mine (Correspondence with PacifiCorp). Once the perched aquifers reservoirs are emptied, the flow of groundwater coming from the mine will diminish. An isotopic review of groundwater within the mine has shown a deficiency in Tritium and carbon-14 ($^{14}C$), typically associated with meteoric waters recharging active aquifers. The lack of Tritium and $^{14}C$ in water seeping from perched aquifers into the mine indicates that groundwater is not hydrologically connected with surface water, is relatively ancient in origin, inactive and is not undergoing recharge (pg 322, Drever).

Implementation of the proposed action would manage the intercepted water in accordance to water quality permits. In addition, the installation of the pipeline will protect the municipal water sources at the Upper and Lower springs in Rilda Canyon, which are approximately 0.25 miles from the Deer Creek Mine 1st Right Portals. Birch Spring in Huntington Canyon is a bed rock spring that seeps from the Star Point Sandstone. It is unlikely the construction will affect the spring flow or water quality because it is topographically above the Highway 31 right-of-way.

If implemented the groundwater piped from the 1st right portals (piped water) would mix with diversion water from Huntington Creek in the settling pond. Diversion water entering the settling pond at a rate of 7,000-11,000 gpm from Huntington Creek will be composed of similar concentrations of iron and TDS as measured at the sampling point in Huntington Creek (table 2). At a maximum flow rate of 600 gpm of piped water and a minimum flow rate of 7,000 gpm diversion water, piped water would be diluted by a factor of greater than ten times the volume of water entering the settling pond from the Huntington Creek diversion. Using these flow rates and the high estimated iron concentration of 2.5 mg/L, the piped water would be diluted to 0.2 mg/L plus the measured average background concentration (0.48 mg/L) of iron in Huntington Creek, minus the precipitation of iron (~1 mg/L), due to sediment loading from the Huntington Creek diversion, will yield approximately 0.5 mg/L. As the flow of

diversion water increases and the piped water flow decreases, the total iron concentration will decrease. The intercepted groundwater discharged into the settling pond at the power plant may precipitate iron hydroxide and other ferric solids, which would stain sediment and rock with orange-rust coloration on private land. No hazardous effects are expected, elevated levels greater than .3 mg/L of iron may cause discoloration or unpleasant taste (EPA website for secondary drinking water). The National Recommended Water Quality Criteria for Aquatic Life indicates that 1 mg/L Fe Criterion Continuous Concentration is the highest concentration of Iron in water that is not expected to pose a significant risk to the majority of species in a given environment (EPA website).

In the event the Power Plant shuts down and groundwater still has potential to come out of the 1st Rilda Right Portals, piped groundwater would be discharged into Huntington Creek, if it meets the Utah Division of Water Quality standards. If the water does not meet set standards, then the water will be treated prior to discharging.

Table 2

| Huntington Plant UPDES Groundwater Permit UGW150002 | | | | |
|---|---|---|---|---|
| Water Quality Parameter | Huntington Creek mg/L | Groundwater seepage in mine mg/L | Raw Pond Water mg/L | UPDES UGW150002 Groundwater Permit (Huntington Plant, including research farm)<br><br>Protection Levels |
| Selenium | <0.002[See Note 1] | <0.02[See Note 2] | <0.002[See Note 1] | ---- |
| Iron | 0.48[See Note 3] | Projected at 2.0-2.5[See Note 4] | <0.5[See Note 5] | ---- |
| TDS | 244 | 500 | 248-262 | [See Note 6] |
| pH | 8.4[See Note 1] | 7.5 | 8.4 | |

Note 1: Based on samples collected by PacifiCorp on Huntington Creek above the plant, Emery County Road 304/Huntington Creek bridge crossing.
Note 2: Based on samples collected by PacifiCorp on in-mine groundwater projected to gravity flow from the Rilda Canyon 1st Right Portals. Value limited by the reporting criteria of the analyzing equipment.
Note 3: Based on samples collected by PacifiCorp on Huntington Creek above the plant, Emery County Road 304/Huntington Creek bridge crossing. Total iron value influenced by sediment load in Huntington Creek. Projected total iron in the Plant settling pond.
Note 4: Total iron from the mine will dissipate over time, projected at <1.5 mg/L in less than four years.
Note 5: Total iron of the settling pond influenced by sediment load in Huntington Creek. Sampling of the settling pond by PacifiCorp indicates precipitation of the sediment reduces the total iron to <0.1 mg/L.
Note 6: Protection levels for individual wells based on historical sampling results (nitrates and TDS)

Implementation of the proposed action could impact surface water flows and potentially increase the sediment-load due to increased erosion from disturbed soils and pollution from equipment during construction. Approximately 22 acres would be disturbed by implementation of the proposed action. The majority of construction will take place in the public right of way where possible. This disturbance could lead to increased erosion or sedimentation of the disturbed soils into Huntington Creek. To reduce or prevent adverse impacts to water quality, a Stormwater Pollution Prevention Plan (SWPPP) and Spill Prevention and Response Plan (SPRP) would be prepared prior to initiation of ground disturbance. These plans would detail the best management practices and site-specific measures to prevent sediment and other pollutants from discharging into the creek during construction. Additionally a stream alteration permit will be sought if needed to comply with the Clean Water Act if work in the Rilda Canyon stream cannot be avoided.

Implementation of the SWPPP and SPRP would reduce sedimentation and the risk of pollution to surface waters during construction. Potential adverse impacts to water resources would be short-term

(during construction). Installation of the pipeline would also not affect shallow aquifers, because the pipeline will be installed in ground that is above the water table.

Implementation of the proposed action would not adversely affect water quality in the long-term, nor contribute to the existing water quality impairments defined by the Utah Department of Environmental Quality (UDEQ). The impairment from selenium levels in Huntington Creek -1 is thought to be from the dissolution of highly soluble selenium-bearing salts and gypsum in the Mancos Shale, possibly due to agricultural irrigation practices according to a study conducted in the Uncompahgre River Basin, Colorado (Mast et al 2014) (correspondence UDWQ). The impairment of DO, TDS, temperature and pH in Huntington Creek 2 and 3 is thought to be from the Seeley wild fire in the upper portions of Huntington Canyon that occurred in 2012, which may have altered base flow conditions along Huntington Creek and its tributaries (correspondence with UDWQ). Implementation of the proposed action will not create acid mine drainage conditions, because the alkalinity in the groundwater and carbonate buffers in the host rock neutralize any acid generation, due to the oxidation of pyrite. Installation of the pipeline would provide a means of managing water that would otherwise discharge from the mine portal in compliance with water quality standards.

Intercepted groundwater from the mine used in the Huntington Power Plant will also not affect its ability to operate. Water is reused six to seven times during power plant operations until TDS levels reach approximately 1,200 mg/L, at which point the water is transferred to the irrigation storage reservoir and fresh water is transferred from the settling pond in order to continue plant operations (correspondence with PacifiCorp). The power plant cycles water, concentrating TDS through the evaporation of water in the form of steam as a regular part of plant operations. The steam or water vapor will not affect air quality.

Implementation of the proposed action would not adversely affect water quantity. The volume of the settling pond will contain all water coming from the mine portals, provided the flow rate of water entering the settling pond remains in a steady-state with plant operational use; additional water storage is not a concern. Additionally, water from the mine will replace approximately 300-600 gpm normally withdrawn from Huntington Creek, therefore increasing the volume of water for domestic use downstream

SWCPS from the Soil and Water Conservation Handbook (FSH 2509.22) that are applied in the POD

| | | |
|---|---|---|
| 13.04 | REVEGETATION OF SURFACE DISTURBED AREAS - To protect soil productivity and water quality by minimizing soil erosion | Topsoil and subsoil will be segregated and stockpiled separately adjacent to the trench. The stockpiled subsoil will be used to backfill the trench, and the topsoil will be replaced on the surface and graded to pre-disturbance contours.<br><br>All disturbed areas will be seeded with seed mixtures developed for the project. The seed will be certified weed and noxious weed free.<br><br>If seeding cannot be completed prior to winter freezing, hydromulch with tackifier will be applied where appropriate. |
| 13.06 | SOIL MOISTURE LIMITATIONS FOR TRACTOR OPERATION - To minimize soil compaction, puddling, rutting, and gullying with | During wet conditions, vehicle traffic and equipment operation will be restricted to prevent rutting. |

| | | |
|---|---|---|
| | resultant sediment production and loss of soil productivity.<br>Note that this SWCP applies to all heavy equipment operations. | |
| 15.06 | MITIGATION OF SURFACE EROSION AND STABILIZATION OF SLOPES - To minimize soil erosion from road cut slopes, fill slopes, and travel ways. | Stabilization techniques are included in the Plan of Development and Stormwater Pollution Prevention Plan (SWPPP). |
| 5.11 | SERVICING AND REFUELING EQUIPMENT - To prevent contamination of waters from accidental spills of fuels, lubricants, bitumens, and other harmful materials. | Refueling areas will be a minimum of 300 feet from perennial and intermittent stream channels, seeps and springs, wetlands, lakes and reservoirs, stock water developments, and other water features. All projects will adhere to the Spill Prevention and Response Plan (SPRP) in case of accidents. |
| 15.18 | DISPOSAL OF RIGHT-OF-WAY AND ROADSIDE DEBRIS - To insure debris generated during road construction is kept out of streams and prevent slash and debris from subsequently obstructing channels. | Clearing and grading will be minimized to only the extents necessary to dig the trench for the pipeline itself. Debris will not be placed in stream channels. The ground surface will be graded back to original contours as the pipeline is installed. |

**References**


M. Alisa Mast, Taylor J. Mills, Suzanne S. Paschke, Gabrielle Keith, Joshua I. Linard: *Mobilization of selenium from the Mancos Shale and associated soils in the lower Uncompahgre River Basin, Colorado.* Applied Geochemistry 48 (2014) 16-27. www.elsevier.com/ locate/apgeochem

Erik C. Petersen, P.G., Principal Hydrogeologist, Utah PG #5373615-2250, Peterson Hydrologic Report: Deer Creek Mine Pipeline 2016

James I. Drever, *The Geochemistry of Natural Waters: Surface and Groundwater Environments,* Third Edition. 1997

*EPA website* – Drinking water standards 2016, www.epa.gov/ground-water-and-drinking-water/table-regulated-drinking-water-contaminants. Accessed on 9 September 2016.

*EPA website* –Secondary EPA drinking water standards 2016, www.epa.gov/dwstandardsregulations/secondary-drinking-water-standards-guidance-nuisance-chemicals#self. Accessed on 9 September 2016.

*EPA website* National Recommended Water Quality Criteria - Aquatic Life Criteria Table 2016, www.epa.gov/wqc/national-recommended-water-quality-criteria-aquatic-life-criteria-table. Accessed on 9 September 2016.

# DEER CREEK MINE

# VOLUME 12

# MILL FORK LEASE

**R645-301-700**

**HYDROLOGY**

# APPENDIX E

**DEER CREEK MINE CLOSURE WATER PIPELINE**

- **UTU-91700 and PRI-1606 – Final Environmental Assessment**
  - **Peterson Hydrology Report**

PETERSEN HYDROLOGIC

11 July 2016

Mr. Charles Semborski, P.G.
Manager of Geology and Exploration
PacifiCorp – Interwest Mining Company
15 North Main Street
Huntington, Utah 84528

Chuck,

At your request, we have evaluated hydrologic conditions along PacifiCorp's proposed Deer Creek pipeline location from the Deer Creek Mine 1st Right portals in Rilda Canyon to the Huntington Power Plant near the mouth of Huntington Canyon in Emery County, Utah (Figure 1). My findings in this regard are summarized in this letter report.

***Introduction***

PacifiCorp proposes to construct a buried pipeline to convey mine water from the closed Deer Creek Mine to the PacifiCorp Huntington Power Plant near Huntington, Utah (Figure 1). The pipeline corridor is situated almost entirely within the Emery County Road 306 and Utah State Highway 31 right-of-way corridors. The water from the pipeline will flow into an existing water storage pond at the power plant facility and subsequently be utilized for operational purposes at the power plant. The purpose of this investigation is to evaluate the hydrologic conditions along the proposed pipeline route as they relate to the proposed Deer Creek Pipeline project.

2695 N. 600 E. LEHI, UTAH 84043 (801) 766-4006

***Methods of Study***

- On 22 June 2016 we visited the proposed Deer Creek pipeline location together with personnel from PacifiCorp. As part of the site visit we traversed the entire length of the proposed corridor by vehicle (almost all of the proposed pipeline location is within the existing road right-of-way). During this visit we were also provided information regarding the proposed pipeline construction plans. Additionally, during the performance of numerous hydrologic investigations over the past 25 years in Huntington Canyon, we have become familiar with the groundwater and surface-water hydrology of the Huntington Canyon drainage.

- On 22 June 2016 the length of the proposed pipeline route was photographed by PacifiCorp personnel. The photographs, maps and other documents relating to the proposed Deer Creek Pipeline were provided to Petersen Hydrologic, LLC by PacifiCorp for use in this analysis. Aerial imagery was also obtained and utilized as part of this investigation.

- Information on municipal watersheds, drinking water source areas, impaired stream segments, and TMDL studies were obtained from the Utah Department of Environmental Quality, Division of Water Quality, and Division of Drinking Water.

***Pipeline Location***

The proposed Deer Creek pipeline route runs from the Deer Creek Mine 1st Right portals in Rilda Canyon in Section 28, Township 16, South, Range 7 East, extending along Emery County Road 306 down Rilda Canyon to State Highway 31 in Huntington Canyon. The proposed pipeline route continues along Highway 31 down Huntington Canyon to a water storage pond at the Huntington Power Plant in Section 36, Township 16 South, Range 7 East (Figure 1).

The proposed pipeline will consist of a nominal 8-inch or 10-inch HDPE pipe that will be buried to a minimum depth of approximately 5 feet. Best management practices will be employed during the pipeline construction to minimize the potential for impacts to the surrounding environment. The proposed pipeline route exists almost entirely within the existing right-of-way corridors for Emery County Road 306 (in Rilda Canyon) and Utah State Highway 31 (in Huntington Canyon).

Areas where the pipeline will be located outside of the right-of-way for these roads include the Deer Creek Mine 1st Right Portals area (within the existing Deer Creek Mine disturbed area boundary), small areas at the two Huntington Creek stream crossings, and where the pipeline traverses PacifiCorp Power Plant property to the pipeline terminus at the water storage pond (Figure 1).

The proposed pipeline location crosses Huntington Creek in two locations (Figure 1). These crossings will be made at both locations by suspending the pipeline beneath existing above-ground structures and thus the stream channel and flood plains beneath the suspended pipeline will not be disturbed. The planned crossing of Bear Creek by the pipeline (Figure 1) will be accomplished by boring beneath the stream channel such that disturbance to the Bear Creek stream channel and its associated riparian vegetation will be minimal to nonexistent (personal communication, Chuck Semborski, 2016).

In some areas where the available construction space is limited, the pipeline will be installed beneath the existing roadway surface to minimize the potential for impacts to adjacent resources. It should also be noted that other buried pipelines are already present within the right-of-way corridor in which the proposed Deer Creek Pipeline is planned to be emplaced, including pipelines owned by NEWUSSD and XTO.

A SWPPP plan will be in place during construction that will include the necessary erosion controls to prevent sediment transport from the project area. Additionally, a Spill

Prevention and Response Plan will be included as part of the SWPP to reduce the risk of pollution.

***Hydrology***

The proposed pipeline location is situated entirely within the Huntington Creek surface-water drainage. Huntington Creek is part of the San Rafael River drainage, which is tributary to the Colorado River.

The pipeline location runs adjacent to Rilda Canyon Creek in its upper extent, and along Huntington Creek in its lower extent (Figure 1). The proposed pipeline location, being within the right-of-way of the roads, does not extend laterally or downward into areas near the adjacent creeks that, in addition to flowing surface water, could potentially contain alluvial groundwaters, springs, and riparian vegetation and habitats (i.e. plant habitats and communities along the river margins and banks associated with surface waters in the creeks or related alluvial groundwater systems).

Based on field observations of geologic and hydrogeologic conditions and the planned depth of burial of the pipeline, it is anticipated that in most or all areas, the underground pipeline will be installed in ground that is likely above the local water table.

***Vegetation***

The proposed pipeline location is within the existing road right-of-way for Emery County Road 306 and Utah State Highway 31. While riparian vegetation was observed in many locations along both Rilda Canyon Creek and Huntington Creek adjacent to the proposed pipeline location, no appreciable riparian vegetation was observed anywhere within the proposed pipeline route during the 22 June 2016 survey. Thus, no direct impacts to riparian vegetation or related ecosystems within the proposed pipeline corridor are anticipated. The use of best management practices during construction will minimize the potential for off-site impacts to adjacent resources.

In the two locations where the pipeline crosses Huntington Creek (Figure 1), the pipeline will be suspended beneath existing above-ground structures and, consequently, there will be no disturbance to the stream channel or associated flood plains or ecosystem at these crossing locations. Similarly, where the proposed pipeline location crosses Bear Creek, no disturbance of the stream channel and associated vegetation is anticipated because the crossing will be accomplished by boring beneath the stream channel without disturbing the land surface.

***Wetlands***

It is beyond the scope of this investigation to delineate wetlands in the areas adjacent to the proposed pipeline location. However, it is probable that wetlands are present in both the Rilda Canyon Creek and Huntington Creek stream channels in the project area. However, during the 22 June 2016 reconnaissance survey of the proposed Deer Creek Pipeline route, no areas were identified within the proposed pipeline route that had hydrology characteristics consistent with wetland identification. Additionally, although vegetation types were not identified as part of this investigation, no appreciable quantities of vegetation that appeared to have wetland characteristics were observed within the proposed pipeline route. Consequently, the potential for impacts to wetlands as a result of the installation and presence of the proposed pipeline is considered minimal.

The pipeline construction activities will occur within the road right-of-way areas and thus direct impacts to any wetlands that may be potentially present in adjacent areas outside the right-of-way are not anticipated. The use of best management practices during construction will minimize the potential for off-site impacts to adjacent resources.

***Floodplains or flood-prone areas***

The proposed Deer Creek Pipeline route, being situated within the right-of-way for the roadways, will be situated outside of the active flood plains in both the Rilda Canyon and Huntington Canyon areas.

While the proposed Deer Creek pipeline route is outside of the active flood plains in both Rilda and Huntington Canyons, intense flooding does periodically occur in the canyon. Notably, as a likely result of a particularly large wild fire that occurred in 2012, Huntington Creek subsequently experienced several large, destructive flash flooding events that caused extensive erosion along the stream channel and in some locations damage to State Highway 31. As a result of the flooding events in the canyon, a mitigation project consisting of the construction of a flood control dam/debris basin just below the U.S. Forest Service boundary was recently completed to minimize damage from potential future flooding events.

***Municipal supply watersheds and drinking water source areas***

The Huntington Canyon drainage is a municipal supply watershed. Additionally, drinking water source areas are present within the drainage. Protection areas in the vicinity of the Deer Creek Pipeline location include the North Emery Water Users Special Service District (NEWUSSD) spring collection system in Rilda Canyon near the Deer Creek Mine Rilda Canyon Portals, and Birch Spring, which is a bedrock spring owned by the Huntington Cleveland Irrigation Company, which is located just north of Highway 31in Section 26, Township 16, South, Range 7 East (Figure 1). Both of these spring areas provide drinking water for adjacent municipalities and have drinking water source protection plans on file with the Utah Division of Drinking Water. Three additional springs managed by NEWUSSD (located west of Highway 31 in the area) include Lower (south) Spring, Middle Spring, and Upper (north) Spring.

Impacts to the groundwater systems that provide water to these springs are not anticipated as a result of the proposed Deer Creek Pipeline construction.
The proposed pipeline will consist of a nominal 8-inch or 10-inch HDPE pipe that will be buried to a minimum depth of approximately 5 feet. Best management practices will be employed during the pipeline construction to minimize the potential for impacts to the

surrounding environment. It is anticipated that disturbance to the surrounding areas will be minimal.

The relatively shallow depth of excavation for the proposed pipeline construction in Rilda Canyon adjacent to the NEWUSSD spring collection system will likely result in the pipeline being above the water level of the adjacent groundwater system that feeds the springs (the roadway in the vicinity of the spring collection system is elevated relative to the adjacent lower-lying stream alluvium areas). Thus, the presence of the pipeline, being above the local water table, should not impact the quality or quantity of water present in the groundwater system that sustains the NEWUSSD springs.

Groundwater flowing to Birch Spring emanates from a series of fractures in the Star Point Sandstone bedrock. The spring collection system at Birch Spring is topographically above the elevation of the adjacent Highway 31 right-of-way. Additionally, it is apparent upon inspection of the bedrock fractures that the water flowing to Birch Spring most likely comes from the north (opposite the location of the proposed Deer Creek Pipeline). For these reasons, it is considered very unlikely that the construction and existence of the proposed pipeline in the Highway 31 right-of-way will impact water quantity or water quality at Birch Spring.

***Extraordinary circumstances***

The proposed construction on the Deer Creek Pipeline, which will be performed using the best management practices, is not anticipated to have any significant impact on wetlands, flood plains, or municipal supply watersheds. No extraordinary circumstances are considered likely as a result of this proposed action.

***Water quality limited stream segments and TMDL's***

Information obtained from the Utah Department of Environmental Quality (DEQ), Division of Water Quality indicates that Huntington Creek and its tributaries (Huntington

Creek assessment areas 2 and 3 which include portions of the Deer Creek Pipeline area) are currently listed as impaired with respect to temperature, pH, and dissolved oxygen by the Utah DEQ (personal communication, Carl Adams, 2016). The cause for these conditions is likely related in part to the effects of a recent large wild fire in the upper portions of Huntington Canyon that significantly impacted the surface-water system in the canyon. Additionally, a TMDL for total dissolved solids (TDS) concentrations has been approved in the Huntington Creek drainage.

It is considered unlikely that the Deer Creek Pipeline construction activities, which will be limited to the burial of an HDPE pipe at relatively shallow (~ 5 foot) depths within the existing road right-of-way, will adversely affect important water quality parameters in the Huntington Creek drainage (including temperature, pH, dissolved oxygen, or TDS concentrations). The use of best management practices during construction will minimize the potential for off-site impacts to adjacent surface-water resources.

***E.O. 11988***

In compliance with E.O. 11988, no occupancy or modification of flood plains is proposed as part of the proposed Deer Creek Pipeline. Therefore, long-term or short-term adverse impacts are not anticipated.

***E.O. 11990***

In compliance with E.O. 11990, activities that would result in the destruction or modification of wetlands are not proposed for the construction of the proposed Deer Creek Pipeline. No new construction within wetlands is proposed. Accordingly, long- or short-term impacts to wetlands are not anticipated as part of the proposed action.

***Clean Water Act***

The proposed activities are in compliance with the Clean Water Act.

***Safe Drinking Water Act***

The proposed activities are in compliance with the Safe Drinking Water Act

***Forest Plan Management Direction***

The proposed activities are in accordance with the Forest Plan Management Direction.

***Utah Anti-degradation policy (R317-2-3)***

The proposed activities are in compliance with the Utah Anti-degradation policy (R317-2-3).

Please feel free to contact me should you have any questions in this regard.

Sincerely,

Erik C. Petersen, P.G.
Principal Hydrogeologist
Utah PG #5373615-2250

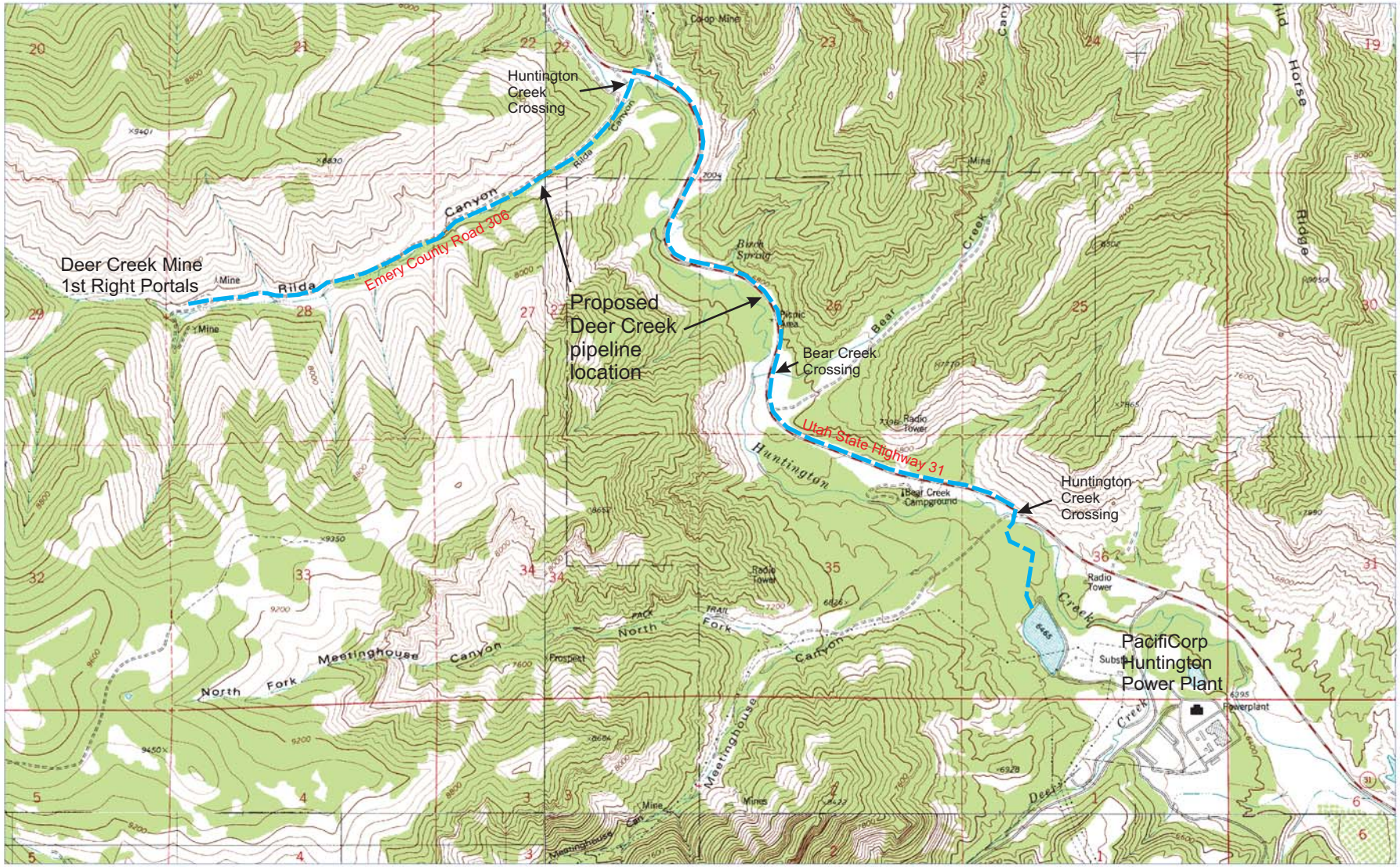


0 ¼ ½ 1 2 Miles

1000 0 2000 4000 6000 8000 10,000 Feet

1,000 Meters 500 0 ½ 1 2 Kilometers

Proposed Deer Creek pipeline location (approximate)

Figure 1 Location of the proposed Deer Creek pipeline.

# DEER CREEK MINE

# VOLUME 12

# MILL FORK LEASE

**R645-301-700**

**HYDROLOGY**

# APPENDIX E

**DEER CREEK MINE CLOSURE WATER PIPELINE**

- **UTU-91700 and PRI-1606 – Final Environmental Assessment**
  - **Biological Resource Report**

# Deer Creek Mine Closure Water Pipeline

## Biological Resources Report

Prepared by:

Jenna Jorgensen
for
Jeff Jewkes – Manti-La Sal National Forest Wildlife Biologist
Pam Manders - Manti-La Sal National Forest Fisheries Biologist
Kim Anderson - Manti-La Sal National Forest Ecologist

for:

Ferron-Price Ranger District
Manti-La Sal National Forest

8/12/2016

The U.S. Department of Agriculture (USDA) prohibits discrimination against its customers, employees, and applicants for employment on the bases of race, color, national origin, age, disability, sex, gender identity, religion, reprisal, and where applicable, political beliefs, marital status, familial or parental status, sexual orientation, or all or part of an individual's income is derived from any public assistance program, or protected genetic information in employment or in any program or activity conducted or funded by the Department. (Not all prohibited bases will apply to all programs and/or employment activities.)

# Contents

Introduction ..... 1
Project Description ..... 1
Project Location ..... 1
Proposed Project ..... 2
Methodology ..... 2
Affected Environment ..... 2
Existing Condition ..... 2
Species ..... 3
Management Direction ..... 4
Environmental Consequences ..... 4
Alternative 1 – No Action ..... 4
Alternative 2 – Proposed Action ..... 4
Project Design Features and Mitigation Measures ..... 5
Direct and Indirect Effects ..... 5
Cumulative Effects ..... 6
Regulatory Framework ..... 8
Land and Resource Management Plan ..... 8
Federal Law ..... 8
Executive Orders ..... 8
Other Relevant Mandatory Disclosures ..... 8
Compliance with LRMP and Other Relevant Laws, Regulations, Policies and Plans ..... 8
References Cited ..... 9

Appendix A. Maps ..... 10

# Introduction

The purpose of the project is to provide conveyance of mine water from the mine portal to treatment facilities at the Huntington Power Plant. The need is to provide a reliable means of transporting the water to prevent an unapproved discharge of groundwater from occurring at the Rilda Canyon portals. The Mine Safety and Health Administration (MSHA) has determined that water may not be retained within the mine; if the pipeline were not constructed, the water would discharge from the mine portal in violation of water quality standards. Remaining options to deal with the pending post-mine gravity discharge at the Rilda Canyon portals are limited. The proposed pipeline would ensure that PacifiCorp maintains water quality standards and protects water quality downstream from the mine.

**Wildlife Resources:** Wildlife species selected for this analysis are composed of the following four groups:

1. Species that are listed as threatened, endangered, or proposed under the Endangered Species Act. A biological assessment (BA) was prepared separately; the BA determined that the proposed project would not affect listed species or critical habitat. A "No Effect" determination is made for listed species. They will not be analyzed further in this report.
2. Species listed as sensitive on the Regional Forester's Sensitive Species List for the Intermountain Region (Region 4). A biological evaluation (BE) was prepared separately; the species carried forward for further analysis include:
    a. Bald eagle
    b. Flammulated owl
    c. Northern goshawk
    d. Peregrine falcon
    e. Spotted bat
    f. Townsend's big-eared bat
3. Management indicator species (MIS) as designated by the Manti-La Sal National Forest Land and Resource Management Plan (USDA 1986, as amended):
    a. Mule deer
    b. Rocky Mountain elk
    c. Golden eagle
    d. Macroinvertebrates
    e. Abert squirrel
    f. Northern goshawk
4. Other Species of Concern. For this analysis, additional migratory bird species were not selected because effects to all other impacted habitat types were analyzed for other species in this analysis.

# Project Description

## Project Location

The project area is located in Rilda and Huntington Canyons, about 10 miles west of Huntington in Emery County (see Map 1 in Appendix A). The project area is within sections 22, 23, 26, 27, 28, 29, 25, 35, and 36 of T16 S, R 7 E.

## Proposed Project

The proposed project includes construction of 5.6 miles of an 8-inch HDPE gravity flow water pipeline from the Deer Creek Mine 1st Right Portals to water treatment facilities at Huntington Power Plant; only 1.8 miles would cross National Forest lands. The pipeline would be constructed within the rights-of-way for Emery County Road #306 and State Route 31 (SR-31). The proposed permanent right-of-way width is 12 feet centered on the pipeline; an additional 20 feet of temporary right-of-way on the outer edge of the permanent right-of-way (away from the roadway) would allow for construction of the pipeline. The total acreage of disturbance on National Forest is estimated to be 6.98 acres.

The pipeline will include two shut-off valves; one at the mine entrance to prevent leaks on National Forest land, and one after the first SR-31 crossing, on private land just north of National Forest land.

The trench for the pipeline would be excavated with a trenching machine or track hoe excavator. Topsoil and subsoil would be segregated and stockpiled separately adjacent to the trench. After the pipeline is installed, the stockpiled subsoil would be used to backfill the trench, and the topsoil would be replaced on the surface and graded to pre-disturbance contours.

The pipeline would be buried with at least 5 feet of cover, except at the crossings of Huntington Creek; the pipeline would be attached to an existing bridge and diversion structure at each crossing. The pipeline would not be buried at these locations. Air vents and Carsonite posts would be installed approximately every 1,000 feet along the alignment; these features would be about 4 feet high, but would be colored to be visually unobtrusive from the roadway. A tracer wire and a fiber optic conduit would also be buried with the pipeline. The conduit would allow for installation of a telecommunications cable in the future without requiring excavation of the entire length of line.

Directional drilling would be applied to install the pipeline under Emery County Road #306, SR-31, and Bear Canyon Road; these drilling locations are on private or Bureau of Land Management (BLM)-administered land. A stormwater pollution prevention plan (SWPPP) and spill prevention and response plan (SPRP) would be prepared and implemented to ensure compliance with the Clean Water Act during construction.

Construction is anticipated to take 2 to 3 months in the summer or fall of 2016. Disturbed areas will be reclaimed upon project completion. After construction, PacifiCorp would maintain the right-of-way and allow the pipeline to operate continuously. If the power plant were to shut down, continuing water treatment would be required at the plant if compliance with water quality standards could not be met. The pipeline would be intended to be permanent; if the pipeline were decommissioned, it would be left in the ground to avoid further ground disturbance.

### Methodology

Impacts were assessed based on assumed presence or absence of species within the project area. The indicator for impacts to all present species is change in habitat effectiveness; this is evaluated on a qualitative basis. Where possible, direct impacts to suitable habitats were quantified.

# Affected Environment

## Existing Condition

The existing environment within the project action area includes riparian vegetation adjacent to Huntington Creek, cliff habitat through both canyons, and mature conifers within Rilda Canyon. Most areas of direct disturbance have been previously disturbed by roadways or utilities.

## Species

### Bald eagle (*Haliaeetus leucocephalus*)

No bald eagles are known to nest on the Ferron-Price Ranger District. Open habitats with available carrion could exist within the project area. Bald eagles may fly over the area and roost or perch incidentally, mainly from November through March.

### Flammulated owl (*Otus flammeolus*)

Flammulated owls may nest in the mature forest at the bottom of Rilda Canyon, and could forage within the project area.

### Northern goshawk (*Accipiter gentilis*)

Goshawks may nest in the mature forest at the bottom of Rilda Canyon, and could forage within the project area.

### Peregrine falcon (*Falco peregrinus anatum*)

Potentially suitable cliff nesting habitat occurs in both Rilda and Huntington Canyons. The project area includes riparian habitat, which may provide prey for foraging falcons.

### Spotted bat (*Euderma maculatum*)

Potential cliff roosting habitat occurs in both Rilda and Huntington Canyons. Foraging may occur throughout the riparian area.

### Townsend's big-eared bat (*Corynorhinus townsendii pallescens*)

Potential cavern roosting habitat is not known within the project area. Foraging may occur throughout the riparian project area.

### Mule deer (*Odocoileus hemionus*)

The proposed project is within Utah Division of Wildlife Resources (UDWR)-mapped crucial winter habitat.

### Rocky Mountain elk (*Cervus elaphus*)

The proposed project is within UDWR-mapped crucial winter and summer habitats.

### Golden eagle (*Aquila chrysaetos*)

Potentially suitable cliff nesting habitat occurs in both Rilda and Huntington Canyons. Golden eagles may forage throughout the project area.

### Macroinvertebrates:

Macroinvertebrates occur in Huntington Creek; however, the proposed project will not impact the creek or aquatic habitats. Macroinvertebrates will not be analyzed further in this report.

### Abert squirrel (*Sciurus aberti*):

Abert squirrel is only found on the Monticello District of the Forest; therefore, the species will not be analyzed further in this report.

## Management Direction

### Desired Condition

Forest Service Manual (FSM) 2670 establishes the following management direction and objectives for sensitive species:

- Maintain viable populations of all native and desired non-native wildlife, fish, and plant species in habitats distributed throughout their geographic range on National Forest System lands.
- Review programs and activities are part of the National Environmental Policy Act of 1969 process, through a biological evaluation, to determine their potential effect on sensitive species.
- Analyze, if impacts cannot be avoided, the significance of potential adverse effects on the population or its habitat within the area of concern and on the species as a whole.

Species selected as management indicator species (MIS) are used to monitor a particular habitat type. This is accomplished by assessing the habitat conditions and population changes of the MIS that occupy each habitat, as required in the National Forest Management Act of 1976 (published at 36 CFR parts 200 to 299, July 1, 2000 edition).

On August 1, 2007, the National Forests in Utah formalized an updated state-wide strategy for addressing migratory birds in Forest Service planning and project documents (USDA 2007). Species selected for this analysis were chosen based on the process identified in this strategy. Bird species selected for this analysis were derived from a compilation of species included in the Utah Partners in Flight Conservation Strategy (UPFCS) (Parrish et al. 2002), the Utah Comprehensive Wildlife Conservation Strategy (Gorrell et al. 2005), and the Fish and Wildlife Service Birds of Conservation Concern bird lists (USFWS 2008). Birds included in these publications include those at higher risk due to habitat loss or degradation, with highest-risk species given priority status in the UPFCS listing (Parrish et al. 2002). Additional migratory bird species were not selected because effects to all other habitat types were analyzed for other bird species in this analysis.

# Environmental Consequences

## Alternative 1 – No Action

The No Action alternative would have no impact on wildlife species. Habitat effectiveness in the area would continue to be impacted by proximity to the existing road and associated disturbance, but no other changes would be anticipated.

## Alternative 2 – Proposed Action

Up to 6.98 acres of potentially suitable habitat could be disturbed by implementation of the proposed project; actual impacts would likely be much less because the minimal amount of right-of-way would be cleared. In addition, a portion of the proposed right-of-way overlaps with existing roadway disturbance, which is unvegetated and does not provide habitat value. Direct impacts to wildlife species could occur with the removal of up to 6.98 acres of vegetation on National Forest System lands that may provide suitable habitat for foraging or nesting. Habitat effectiveness in the area is likely decreased due to the existing road and associated disturbance. Disturbance to wildlife due to noise or the presence of equipment and personnel could occur, but is unlikely as most animals would likely be habituated to some level of disturbance from the existing road. Potential disturbance from construction would be short-term,

and most animals would likely avoid areas where project activities were occurring. Temporary displacement would be short-term and during construction (2-3 months).

## Project Design Features and Mitigation Measures

Project design features include routing the proposed pipeline within or directly adjacent to existing roadway areas to minimize new ground disturbance. Impacts to Huntington Creek would be avoided by attaching the pipeline to existing crossing infrastructure. The project is scheduled to occur outside of breeding and crucial seasons. Pollution control measures will be applied to prevent impacts to aquatic habitats.

## Direct and Indirect Effects

Direct effects include the loss of up to 6.98 acres of potentially suitable habitat within the project area, and disturbance due to noise and presence of project activities during implementation. The loss of habitat would be permanent, while the disturbance would only occur during construction. Indirect effects are not anticipated with the proposed action.

### Bald eagle, Peregrine falcon, and Golden eagle

Disturbance from the proposed activities could impact falcons or golden eagles if they happened to be nesting nearby, but would not cause nest abandonment as all young should be fledged and highly mobile by the time project activities begin in September. The project area is within a forested landscape, which provides little adequate open terrain for foraging eagles or falcons. Individual birds may fly over the project area, but would likely not remain in areas with disturbance from project activities. Birds in the area would likely be habituated to noise and human presence from the existing roadway. Habitat effectiveness would be decreased, but only slightly when considering the existing disturbance and habitat modification.

### Flammulated owl and Northern goshawk

These species could occur in the project area, although suitable habitat is marginal due to proximity with the roadway and limited mature forest stands within the canyons. Up to 6.98 acres of vegetation may be removed directly adjacent to the roadway; however, the linear nature of the project next to an existing roadway will result in minimal loss of suitable habitat for nesting.

Disturbance from the proposed activities could impact owls or goshawks if they happened to be nesting nearby, but would not cause nest abandonment as all young should be fledged and highly mobile by the time the project begins in September. Individual birds may fly over the project area, but would likely not remain in areas with disturbance from project activities. Birds in the area would likely be habituated to noise and human presence from the existing roadway. Habitat effectiveness would be decreased, but only slightly when considering the existing disturbance and habitat modification.

### Spotted bat and Townsend's big-eared bat

Bats may forage within the project area, as suitable foraging habitat exists along the extent of the project area. Up to 6.98 acres of vegetation may be removed directly adjacent to the roadway; however, the linear nature of the project will result in similar edge habitat, which will continue to provide foraging opportunities for bats. There is little risk of disturbance from the proposed activities because these bats are nocturnal, and the proposed activities would occur during the day. If bats were to pass through the area at night, they would likely not be disturbed by project activities.

### Mule deer and Rocky Mountain elk

The UDWR has delineated crucial winter mule deer habitat and crucial winter and summer elk habitat within the project area. Up to 6.98 acres of vegetation may be removed directly adjacent to the roadway; however, the linear nature of the project will result in similar edge habitat, which will continue to provide foraging opportunities for big game and result in minimal loss of cover. Project activities will occur in the fall of 2016, after calving season; therefore, crucial elk summer habitat use will not be impacted. Project activities may extend into December, when crucial winter habitat are used by both deer and elk. Deer and elk may be temporarily displaced by disturbance associated with the proposed action, but would be expected to return to the area shortly after implementation.

## Cumulative Effects

### Spatial and Temporal Context for Effects Analysis

The Cumulative Effects Area (CEA) represents a landscape surrounding the project area where past, present, and reasonably foreseeable future management actions have occurred or will occur. Due to the scope of this project, a larger area outside the Forest Service boundary was considered for the CEA. The species included in this analysis will likely use all or part of this CEA during some portion of their life cycle. Lands identified outside of the National Forest boundary primarily consist of private, School and Institutional Trust Lands Administration (SITLA), and BLM-administered lands. Actions occurring outside of the Forest boundary are similar to those described on the Forest.

The geographic scope of the CEA is specific for individual species depending on relevant life history characteristics. The temporal scope is 5 years for direct and indirect impacts associated with implementation of the project; this scope assumes that reclamation would be achieved within the rights-of-way within 5 years. Permanent or long-term impacts are not anticipated because the pipeline will be buried and require minimal maintenance.

#### *Past, Present, and Reasonably Foreseeable Activities Relevant to Cumulative Effects Analysis*

Management actions in the area include vegetation management (e.g., timber harvest, timber stand improvement, prescribed burning), utility installation and maintenance, oil and gas development, livestock grazing, recreation use (e.g., OHV use, camping, and hunting), special uses (e.g., firewood collection, outfitters, and guides), and motorized access.

### Raptors

The CEA for bald eagle and peregrine falcon includes the project area and a 2-mile buffer beyond the project boundary (see Map 2 in Appendix A). The CEA for golden eagle and northern goshawk includes the project area and a 1-mile buffer beyond the project boundary (see Map 3 in Appendix A). The CEA for flammulated owl includes the project area and a 0.5-mile buffer beyond the project boundary (see Map 4 in Appendix A). These distances were selected based on the spatial buffers in the *Utah Field Office Guidelines for Raptor Protection from Human and Land Use Disturbances* (Romin and Muck 2002). The recommended distance was doubled to account for potential impacts from the other side of the buffer; the CEA encompasses the project area and respective buffer as listed in Table 1.

**Table 1. Cumulative effects area (CEA) dimensions for raptor species**

| Species | Recommended Buffer (miles) | CEA Buffer (miles) | Total Area (Acres) |
|---|---|---|---|
| Bald eagle<br>Peregrine falcon | 1.0 | 2.0 | 20,224 |
| Golden eagle<br>Northern goshawk | 0.5 | 1.0 | 8,389 |
| Flammulated owl | 0.25 | 0.5 | 3,829 |

Birds nesting or foraging in the area could be disturbed by other human activities; however, much of the habitat is isolated in steep, inaccessible canyons. Birds who avoided nesting or foraging within the immediate area of the project disturbance would have abundant available alternate habitat within the CEA. Habitat effectiveness within the larger CEA will not be noticeably impacted by the proposed project. Raptors are unlikely to be cumulatively affected by the project due to abundant alternate habitat.

### Spotted bat and Townsend's big-eared bat

Spotted bats appear to maintain exclusive foraging areas 3 to 6 miles from their day roost sites (Wackenhut and McGraw 1996). Because Townsend's bats also forage in riparian areas, a 3-mile buffer beyond the project area was included in the CEA for these bats. The CEA encompasses are area of 35,978 acres (see Map 5 in Appendix A).

Bats roosting or foraging in the CEA could be disturbed by other human activities; however, much of the habitat is isolated in steep, inaccessible canyons. Bats who avoided roosting or foraging within the immediate area of the project disturbance would have abundant available habitat within the CEA. Habitat effectiveness within the larger CEA will not be noticeably impacted by the proposed project. Bats are unlikely to be cumulatively affected by the project due to abundant alternate habitat.

### Mule deer and Rocky Mountain elk

The CEA for mule deer includes all mapped crucial winter habitat within the impacted watersheds; the CEA encompasses an area of 48,806 acres (see Map 6 in Appendix A). The CEA for elk includes all mapped crucial winter and summer habitat within the impacted watersheds; the CEA encompasses an area of 62,003 acres (see Map 7 in Appendix A).

Big game habitat within the CEA has been impacted by oil and gas development, competitive livestock grazing, and recreational use. Possible effects of these actions include displacement into less suitable habitats, behavioral disruption and stress due to construction noise and activity, and modification of forage and water resources.

Such impacts would likely result in a decrease of the local big game population due to reduced reproduction or survival; however, trend counts conducted by the Utah Division of Wildlife Resources (UDWR) indicate that the mule deer population trend in Utah has been increasing (UDWR 2014) and elk populations in the area are at or above the population objective (UDWR 2015).

Disturbance to big game could occur as a result of project activities, but is unlikely as the animals may avoid areas where project disturbance is occurring, and abundant isolated habitat is accessible within the CEA. Habitat effectiveness would not noticeably decrease when considering the existing disturbance within the CEA. Mule deer and Rocky Mountain elk would not be adversely affected by implementation of the proposed action.

# Regulatory Framework

## Land and Resource Management Plan

The Manti La-Sal National Forest Land and Resource Management Plan (LRMP) provides standards and guidelines for management of wildlife resources. Relevant standards and guidelines include:

- Manage key deer and elk habitat so as to minimize disturbance during the period of use.
- Avoid activities that could cause abandonment of actives nests (golden eagle).
- Provide habitat needs, as appropriate, for Management Indicator Species.

### Management Area

The proposed project crosses management areas GWR (general big game winter range), MMA (leasable minerals area), and RNG (range forage production). Relevant direction for each management area is as follows:

- GWR: As appropriate, permit special uses if they do not conflict with big-game wintering.

## Federal Law

### Endangered Species Act

Federal agencies – in consultation with and with the assistance of the U.S. Fish and Wildlife Service (USFWS), must ensure that any action authorized, funded, or carried out by the federal agency is not likely to jeopardize the continued existence of an endangered, threatened, or proposed listed species, nor result in destruction or adverse modification of a species' critical habitat. Implementation of the proposed action would not result in adverse impacts to any listed species. No critical habitat for any listed species would be adversely affected.

## Executive Orders

### EO 13186

Executive Order 13186, signed January 10, 2001, directs federal agencies to protect migratory birds by integrating bird conservation principles, measures, and practices into agency activities and by avoiding or minimizing, to the extent practical, adverse impacts on migratory birds' resources when conducting agency actions. This Order directs agencies to further comply with the Migratory Bird Treaty Act (MBTA), the Bald and Golden Eagle Protection Act, and other pertinent statutes. This analysis is compliant with the National Memorandum of Understanding between the USDA Forest Service and the USFWS to promote the conservation of migratory birds (USDA 2008).

# Other Relevant Mandatory Disclosures

## Compliance with LRMP and Other Relevant Laws, Regulations, Policies and Plans

Based on the analysis presented in this report, the construction, operation, and maintenance of the proposed pipeline would be consistent with the LRMP.

# References Cited

Romin, L. A., and J. A. Muck. 2002. Utah Field Office Guidelines for Raptor Protection From Human and Land Use Disturbances. U.S. Department of the Interior, U.S. Fish and Wildlife Service, Utah Field Office, Salt Lake City, Utah.

UDWR. 2014. Utah Mule Deer Statewide Management Plan. Utah Division of Wildlife Resources, Department of Natural Resources. December 1, 2014.

UDWR. 2015. Utah Statewide Elk Management Plan. Utah Division of Wildlife Resources, Department of Natural Resources. December 2, 2015.

USDA. 2008. Memorandum of Understanding between the U.S. Department of Agriculture Forest Service and the U.S. Fish and Wildlife Service to promote the conservation of migratory birds. Abigail Kimball (Chief USDA Forest Service) and H. Dale Hall (Director US Fish and Wildlife Service). December 8.

Wackenhut, M. and M. McGraw. 1996. Idaho's bats: Description, habitats, & conservation. Nongame leaflet #11.

# Appendix A. Maps

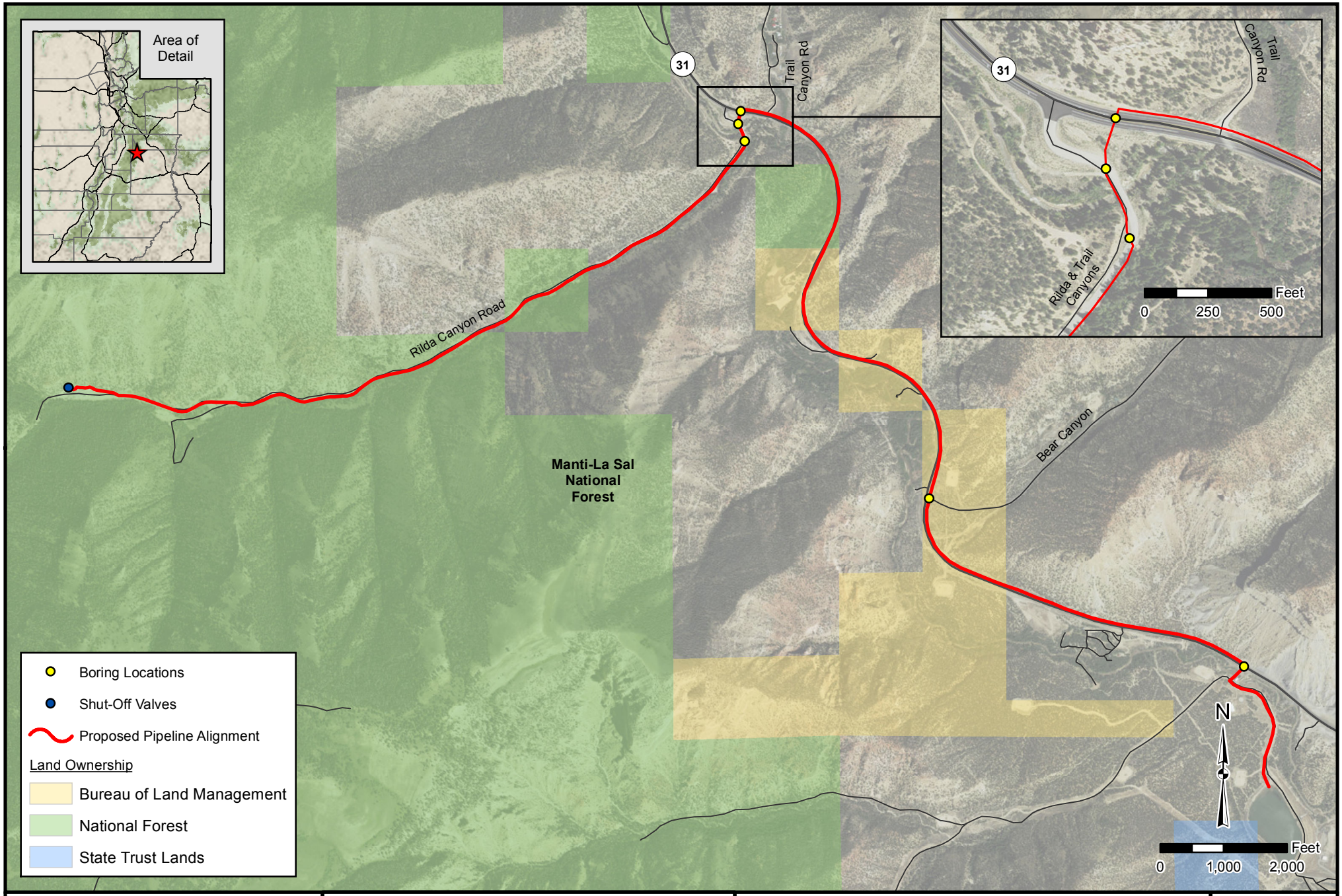


GIS

Jones & DeMille Engineering

*- infrastructure professionals -*

800.748.5275 www.jonesanddemille.com

**PacifiCorp**

***Deer Creek Mine - Proposed Live Water Relief Pipeline Overview***

Map Name: H:\JD\Proj\1506-121\Design\GIS\Maps\EA\1_Overview.mxd

Project Number: 1506-121 | Drawn by: JWW 09-16 | Last Edit: 09/19/2016

**EMERY COUNTY**

SCALE: 1 " = 2,000 '

**1**

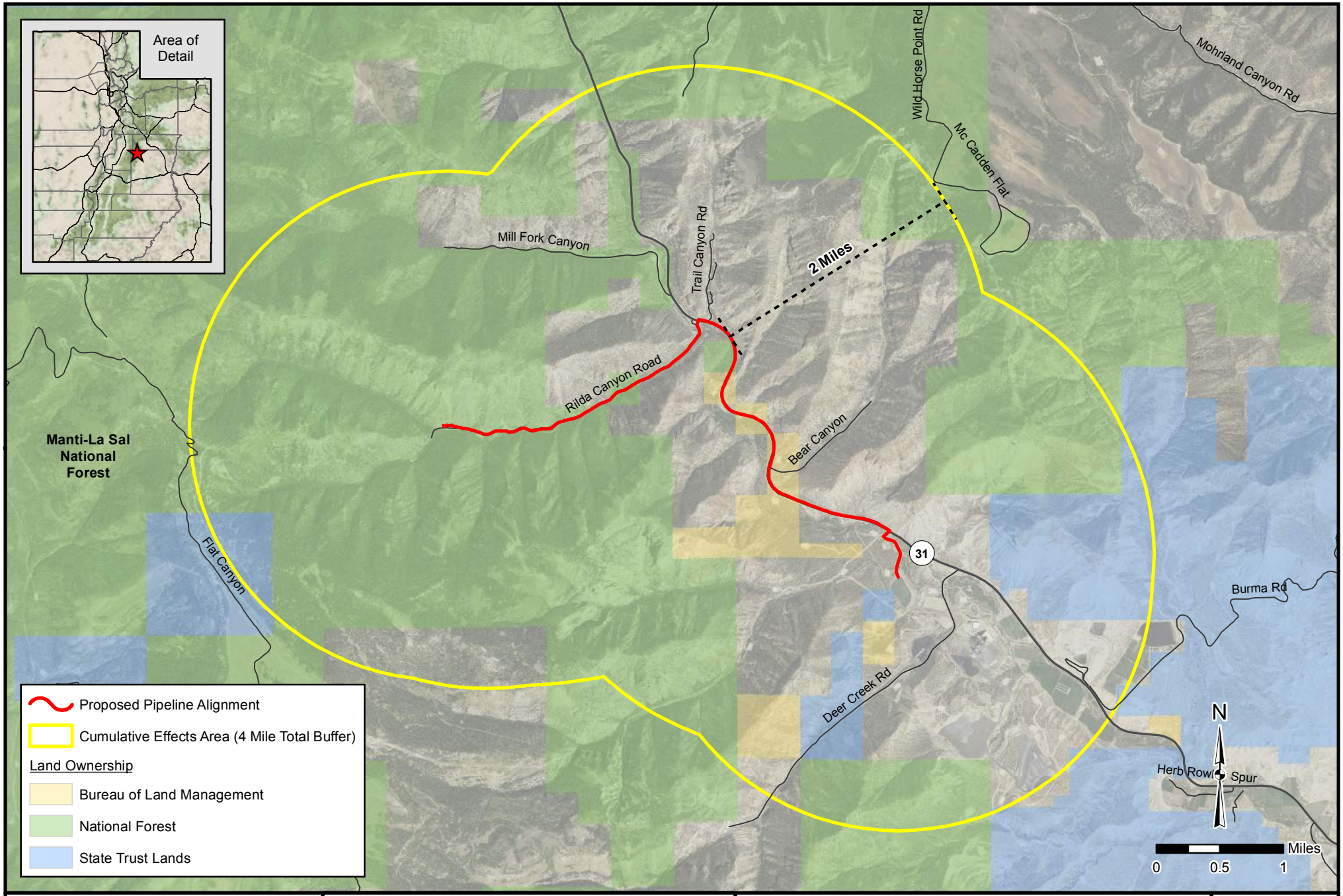


GIS

Jones & DeMille Engineering

- infrastructure professionals -

800.748.5275 www.jonesanddemille.com

**Interwest Mining Company**

***Deer Creek Mine - Proposed Live Water Relief Pipeline***
***Bald Eagle & Peregrine Falcon Cumulative Effects Area***

Map Name: H:\JD\Proj\1506-121\Design\GIS\Maps\POD\BAB\2_CEA_Bald_Eagle_Falcon.mxd

Project Number: 1506-121 | Drawn by: JWW 06-16 | Last Edit: 06/20/2016

**EMERY COUNTY**

SCALE: 1 " = 1 Miles

**2**

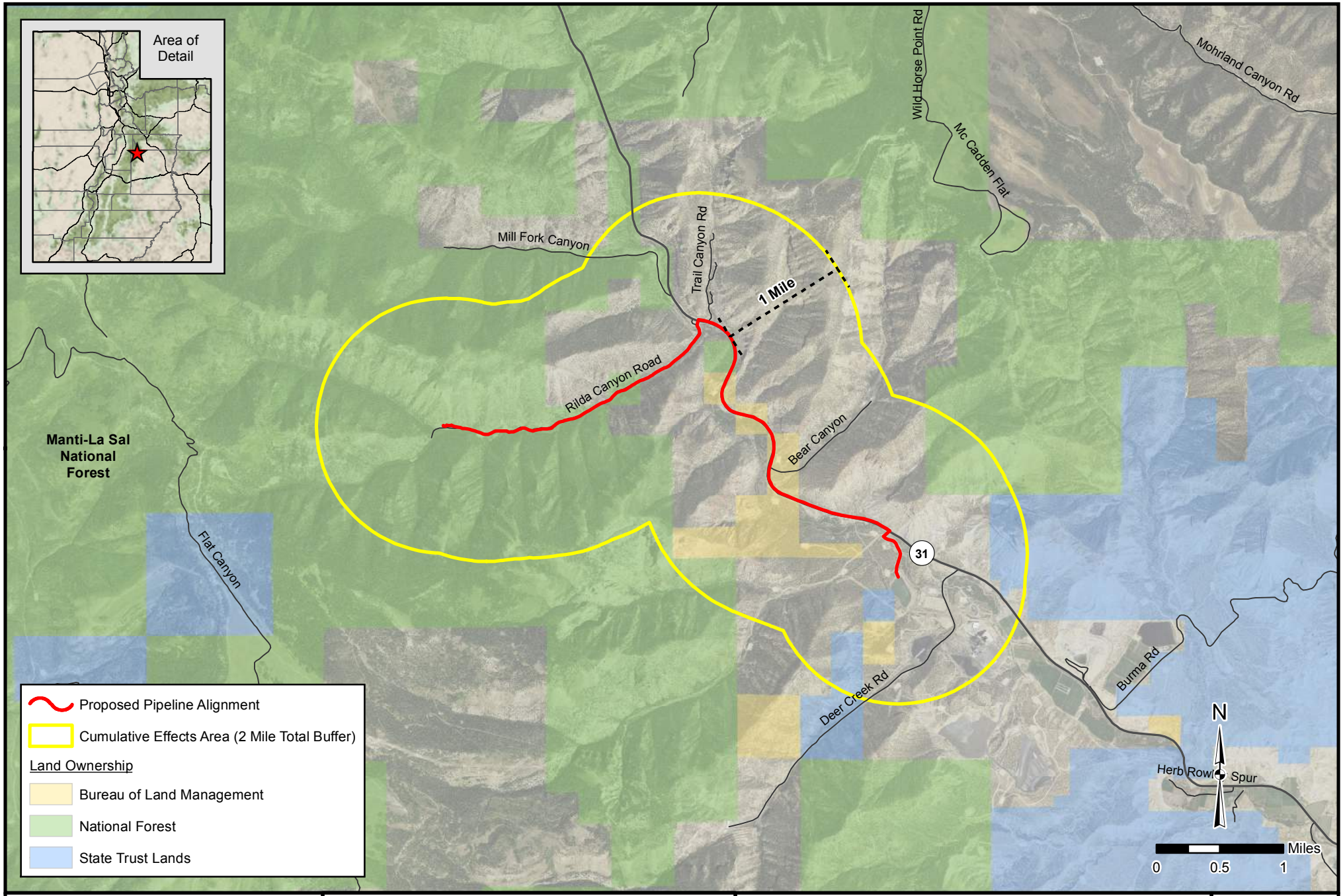


GIS

Jones & DeMille Engineering

- infrastructure professionals -

800.748.5275 www.jonesanddemille.com

**Interwest Mining Company**

***Deer Creek Mine - Proposed Live Water Relief Pipeline***
***Goshawk and Golden Eagle Cumulative Effects Area***

Map Name: H:\JD\Proj\1506-121\Design\GIS\Maps\POD\BAB\3_CEA_Goshawk_Golden_Eagle.mxd

Project Number: 1506-121 | Drawn by: JWW 06-16 | Last Edit: 06/20/2016

**EMERY COUNTY**

SCALE: 1 " = 1 Miles

**3**

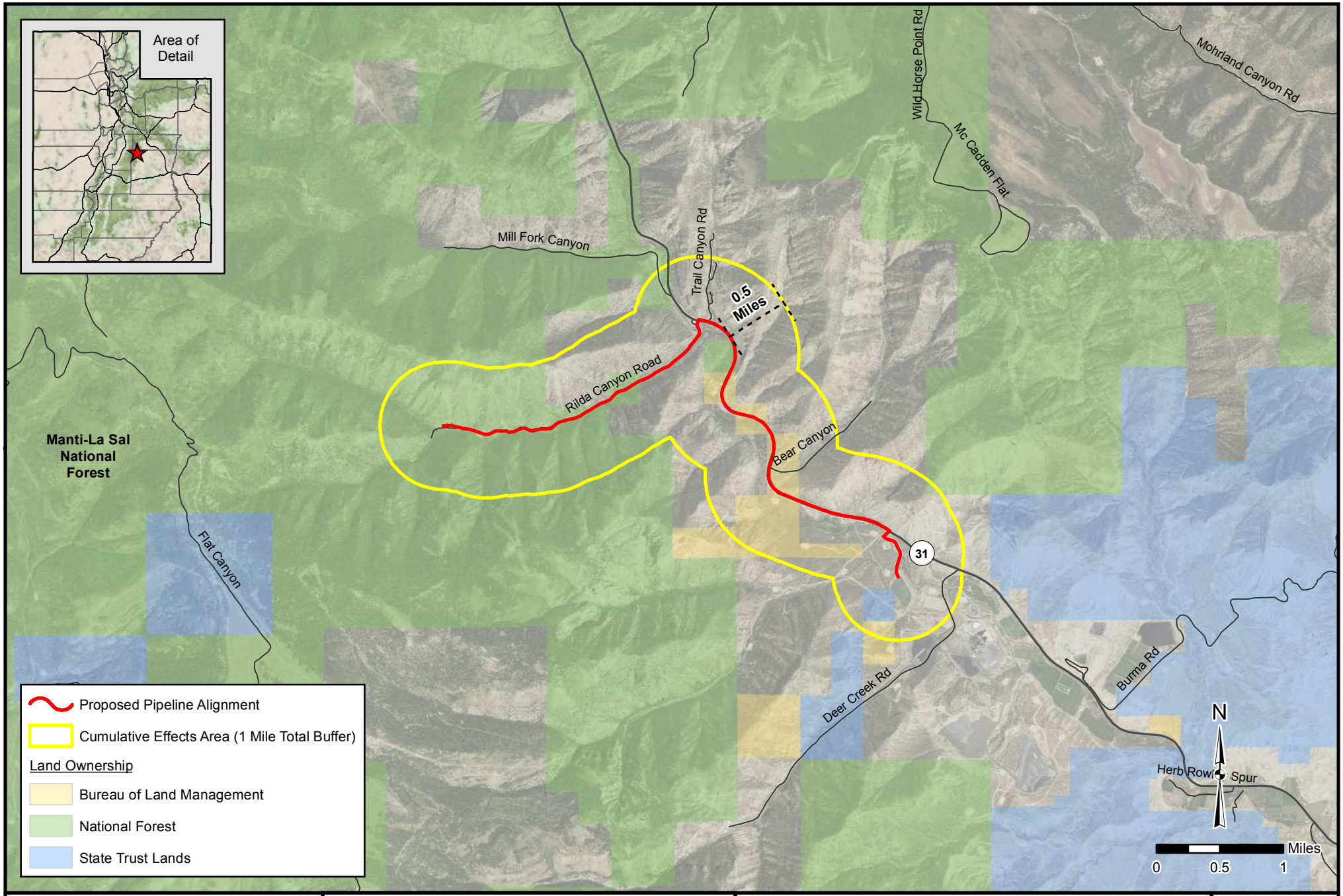


GIS

Jones & DeMille Engineering

- infrastructure professionals -

800.748.5275 www.jonesanddemille.com

**Interwest Mining Company**

***Deer Creek Mine - Proposed Live Water Relief Pipeline***
***Flammulated Owl Cumulative Effects Area***

Map Name: H:\JD\Proj\1506-121\Design\GIS\Maps\POD\BAB\4_CEA_Owl.mxd

Project Number: 1506-121 | Drawn by: JWW 06-16 | Last Edit: 06/20/2016

**EMERY COUNTY**

SCALE: 1 " = 1 Miles

**4**

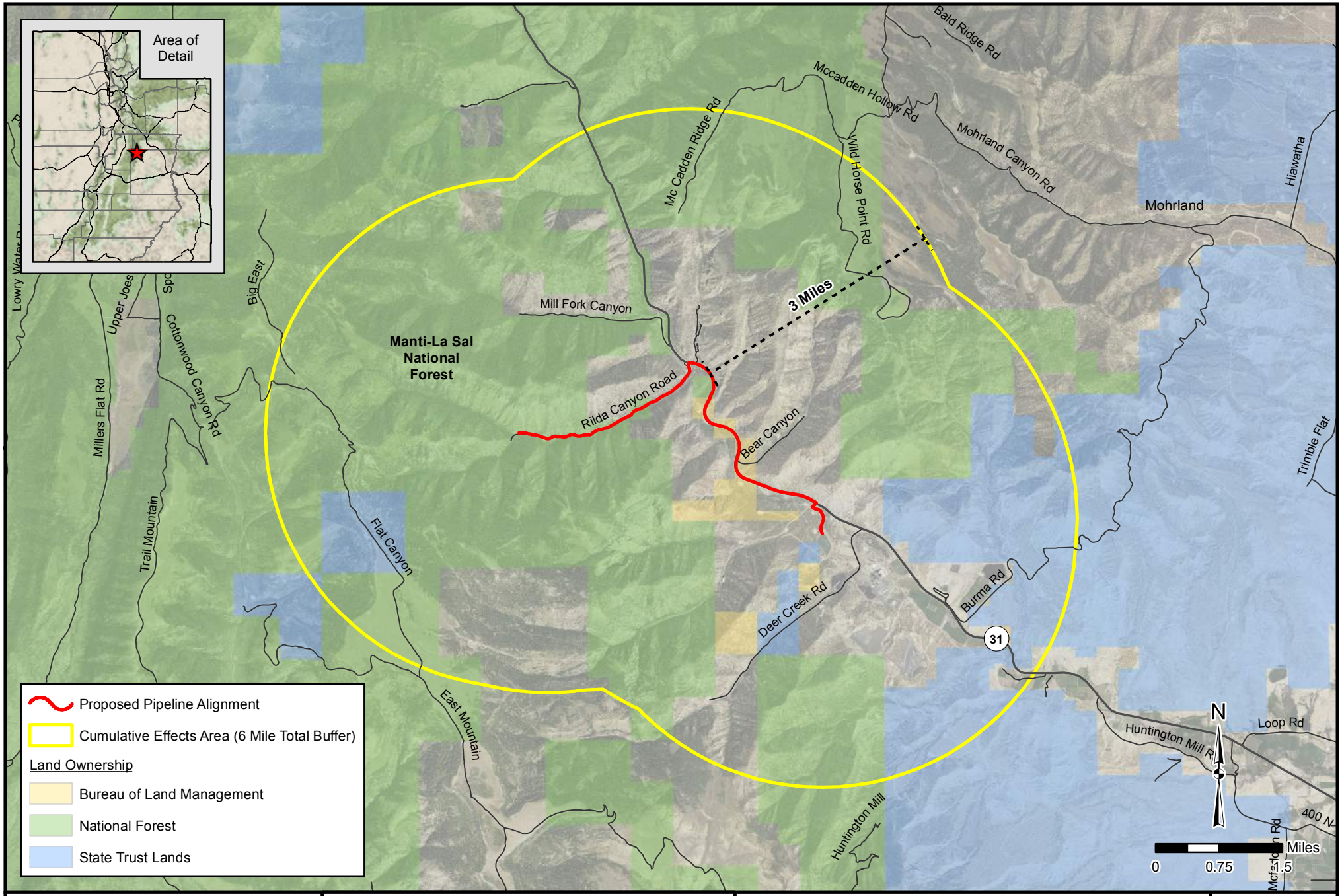


GIS

Jones & DeMille Engineering

- infrastructure professionals -

800.748.5275 www.jonesanddemille.com

**Interwest Mining Company**

***Deer Creek Mine - Proposed Live Water Relief Pipeline***
***Spotted Bat and Townsend's Big-Eared Bat Cumulative Effects Area***

Map Name: H:\JD\Proj\1506-121\Design\GIS\Maps\POD\BAB\5_CEA_Bats.mxd

Project Number: 1506-121 | Drawn by: JWW 06-16 | Last Edit: 06/20/2016

**EMERY COUNTY**

SCALE: 1 " = 1.5 Miles

**5**

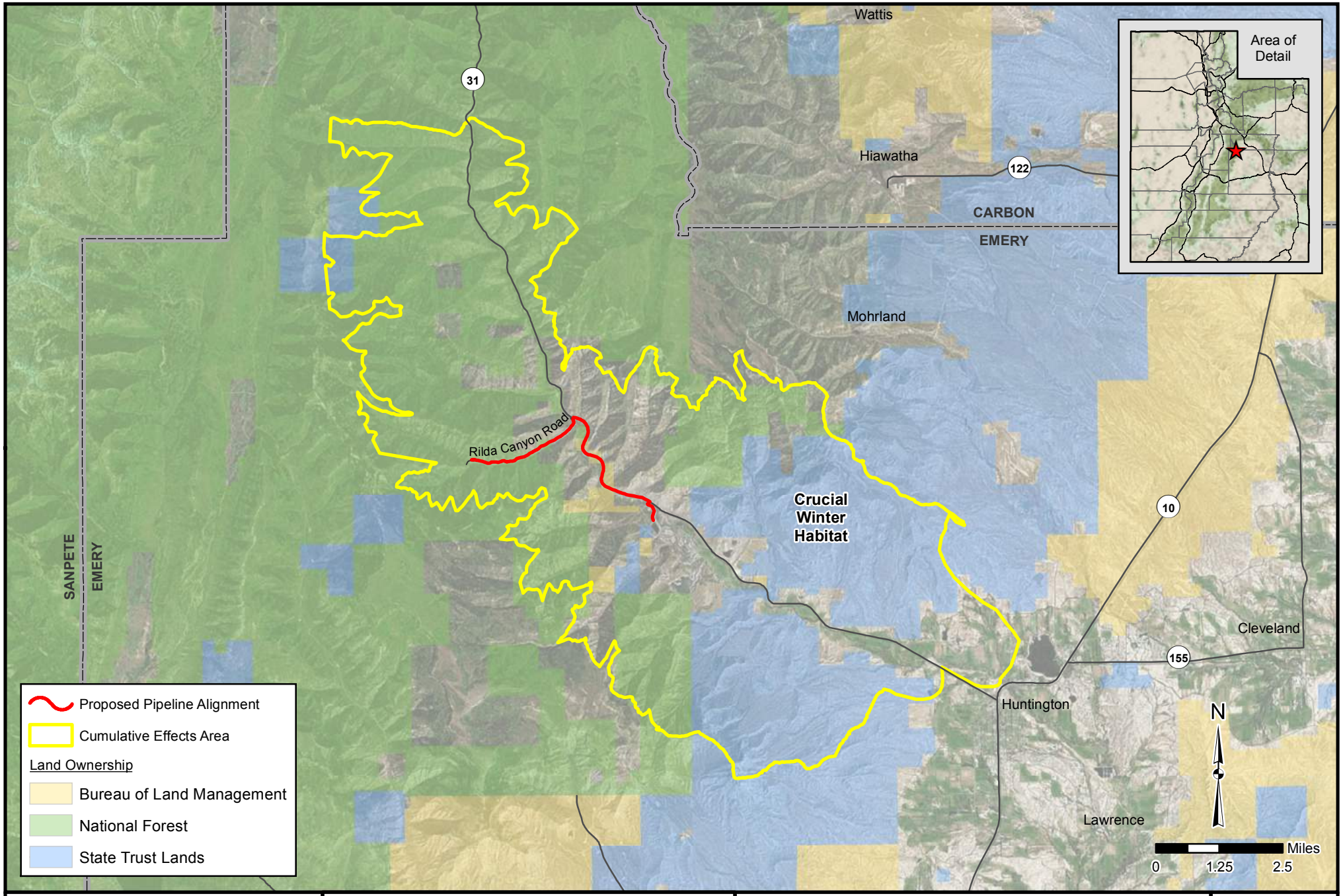


GIS

Jones & DeMille Engineering

- infrastructure professionals -

800.748.5275 www.jonesanddemille.com

**Interwest Mining Company**

***Deer Creek Mine - Proposed Live Water Relief Pipeline***
***Mule Deer Cumulative Effects Area***

Map Name: H:\JD\Proj\1506-121\Design\GIS\Maps\POD\BAB\6_CEA_Deer.mxd

Project Number: 1506-121 | Drawn by: JWW 06-16 | Last Edit: 06/20/2016

**EMERY COUNTY**

SCALE: 1 " = 2.5 Miles

**6**

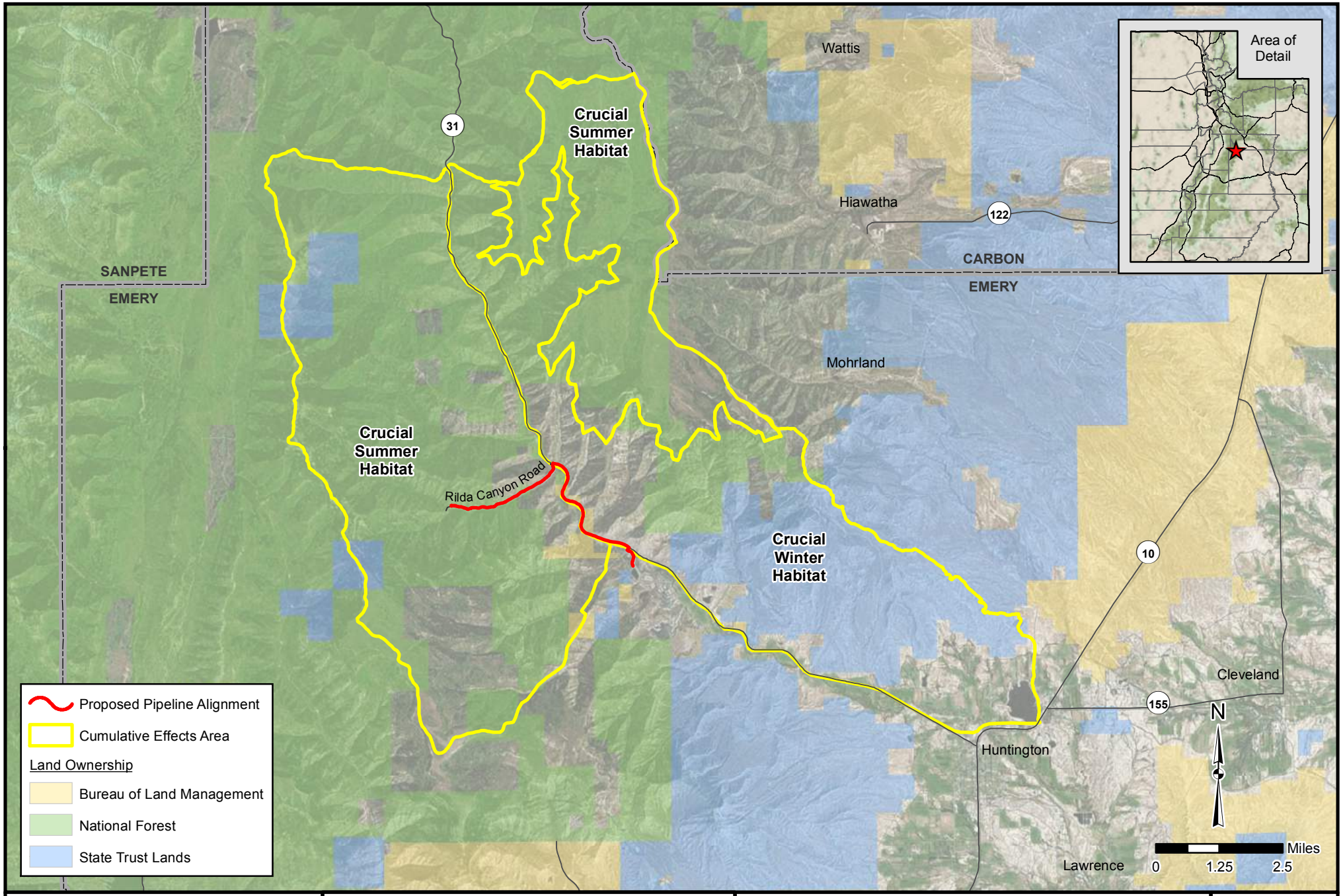


GIS

Jones & DeMille Engineering

- infrastructure professionals -

800.748.5275 www.jonesanddemille.com

**Interwest Mining Company**

***Deer Creek Mine - Proposed Live Water Relief Pipeline***
***Rocky Mountain Elk Cumulative Effects Area***

Map Name: H:\JD\Proj\1506-121\Design\GIS\Maps\POD\BAB\7_CEA_Elk.mxd

Project Number: 1506-121 | Drawn by: JWW 06-16 | Last Edit: 06/20/2016

**EMERY COUNTY**

SCALE: 1 " = 2.5 Miles

**7**

# PacifiCorp

# Deer Creek Mine

# C/015/0018

**Amendment to Add a Post-Mining Water Discharge at Rilda Canyon Portals, Permit Area Change to Include Discharge Pipeline Route and Potential Treatment Facility Area, PacifiCorp, Deer Creek Mine, C/015/0018, Emery County, Utah**

**<u>Volume 12, R645-301-700 Hydrology, Maps Tab</u>**

**Replace Map MFS1830D**

PACIFICORP
A MIDAMERICAN ENERGY HOLDINGS COMPANY

# DEER CREEK MINE – MILL FORK AREA STATE LEASE UTU-88554/UTU-84285 HYDROLOGIC MAP

| | | | |
|---|---|---|---|
| DRAWN BY: | K. LARSEN | MFS1830D | |
| SCALE: | 1"=1000' | DRAWING #: | |
| DATE: | AUGUST 31, 2006 | SHEET 1 OF 1 | REV. 8 |

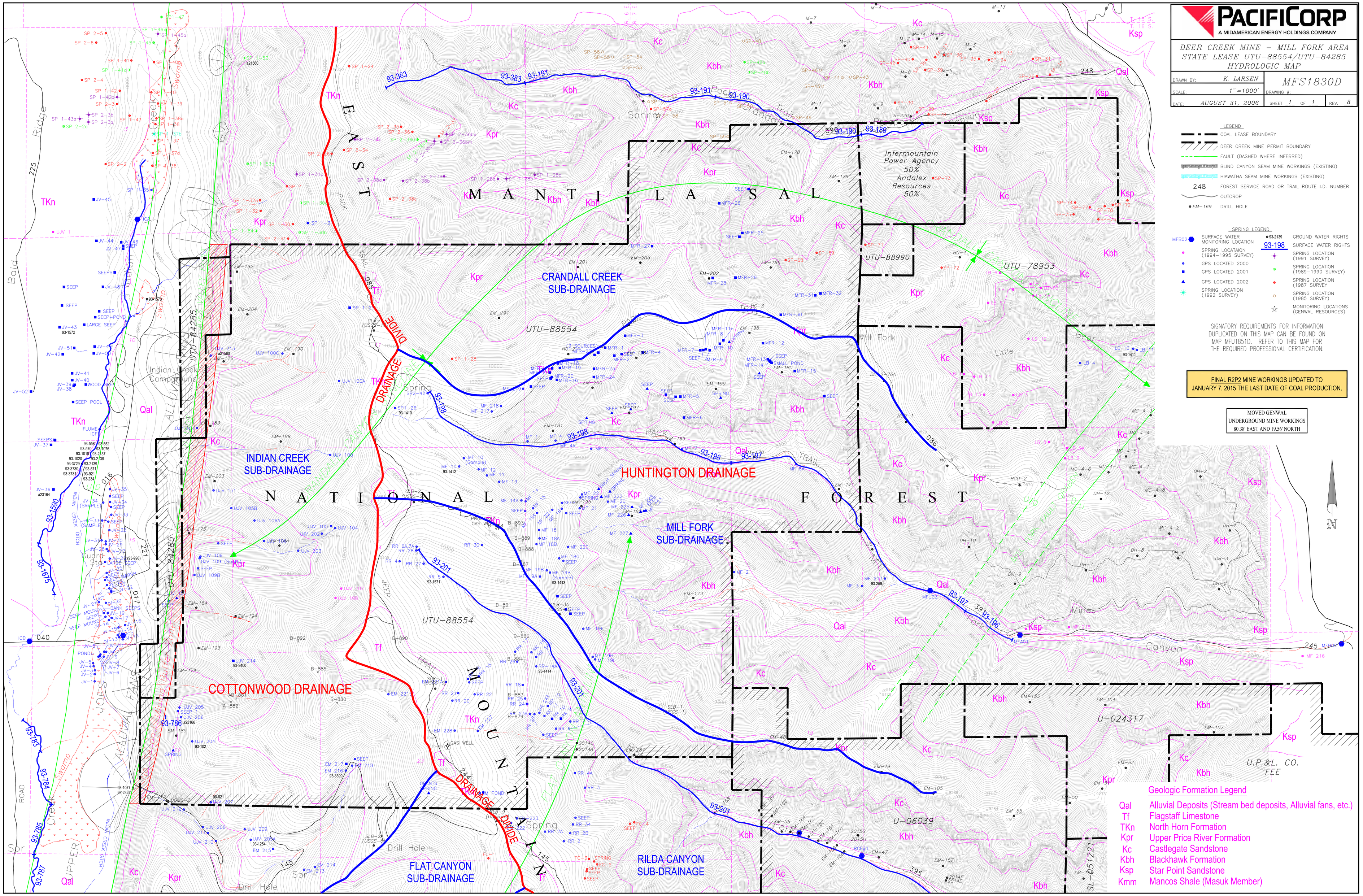


LEGEND

- COAL LEASE BOUNDARY
- DEER CREEK MINE PERMIT BOUNDARY
- FAULT (DASHED WHERE INFERRED)
- BLIND CANYON SEAM MINE WORKINGS (EXISTING)
- HIAWATHA SEAM MINE WORKINGS (EXISTING)
- 248 FOREST SERVICE ROAD OR TRAIL ROUTE I.D. NUMBER
- OUTCROP
- EM-169 DRILL HOLE

SPRING LEGEND

- MFBO2 SURFACE WATER MONITORING LOCATION
- SPRING LOCATAION (1994–1995 SURVEY)
- GPS LOCATED 2000
- GPS LOCATED 2001
- GPS LOCATED 2002
- SPRING LOCATION (1992 SURVEY)
- 93-2139 GROUND WATER RIGHTS
- 93-198 SURFACE WATER RIGHTS
- SPRING LOCATION (1991 SURVEY)
- SPRING LOCATION (1989–1990 SURVEY)
- SPRING LOCATION (1987 SURVEY)
- SPRING LOCATION (1985 SURVEY)
- MONITORING LOCATIONS (GENWAL RESOURCES)

SIGNATORY REQUIREMENTS FOR INFORMATION DUPLICATED ON THIS MAP CAN BE FOUND ON MAP MFU1851D. REFER TO THIS MAP FOR THE REQUIRED PROFESSIONAL CERTIFICATION.

FINAL R2P2 MINE WORKINGS UPDATED TO JANUARY 7, 2015 THE LAST DATE OF COAL PRODUCTION.

MOVED GENWAL UNDERGROUND MINE WORKINGS 80.38' EAST AND 19.56' NORTH

# PacifiCorp

# Deer Creek Mine

# C/015/0018

**Amendment to Add a Post-Mining Water Discharge at Rilda Canyon Portals, Permit Area Change to Include Discharge Pipeline Route and Potential Treatment Facility Area, PacifiCorp, Deer Creek Mine, C/015/0018, Emery County, Utah**

**<u>Volume 12, R645-301-700 Hydrology, Maps Tab</u>**

**Add Maps MFS1902D, MFS1904D, MFS1905D**

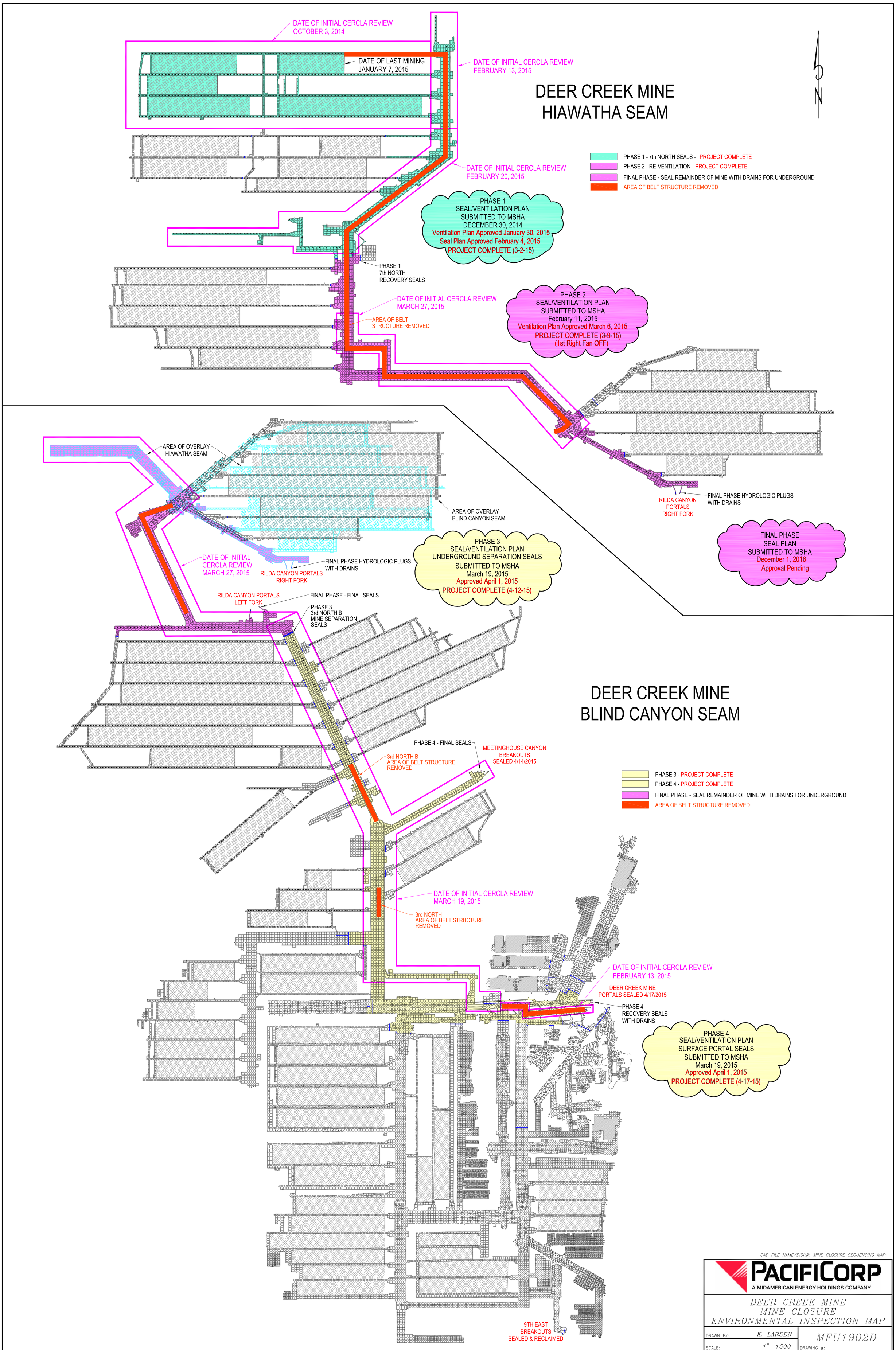


CAD FILE NAME/DISK#: MINE CLOSURE SEQUENCING MAP

PACIFICORP
A MIDAMERICAN ENERGY HOLDINGS COMPANY

DEER CREEK MINE
MINE CLOSURE
ENVIRONMENTAL INSPECTION MAP

| | | | |
|---|---|---|---|
| DRAWN BY: | K. LARSEN | MFU1902D | |
| SCALE: | 1"=1500' | DRAWING #: | |
| DATE: | JANUARY 5, 2017 | SHEET 1 OF 1 | REV. ___ |

PACIFICORP
A MIDAMERICAN ENERGY HOLDINGS COMPANY

# DEER CREEK MINE
# MINE CLOSURE HYDROLOGIC MAP

| | | | |
|---|---|---|---|
| DRAWN BY: K. LARSEN | | MFU1904D | |
| SCALE: 1" =1000' | | DRAWING #: | |
| DATE: JANUARY 6, 2017 | SHEET 1 OF 1 | | REV. |

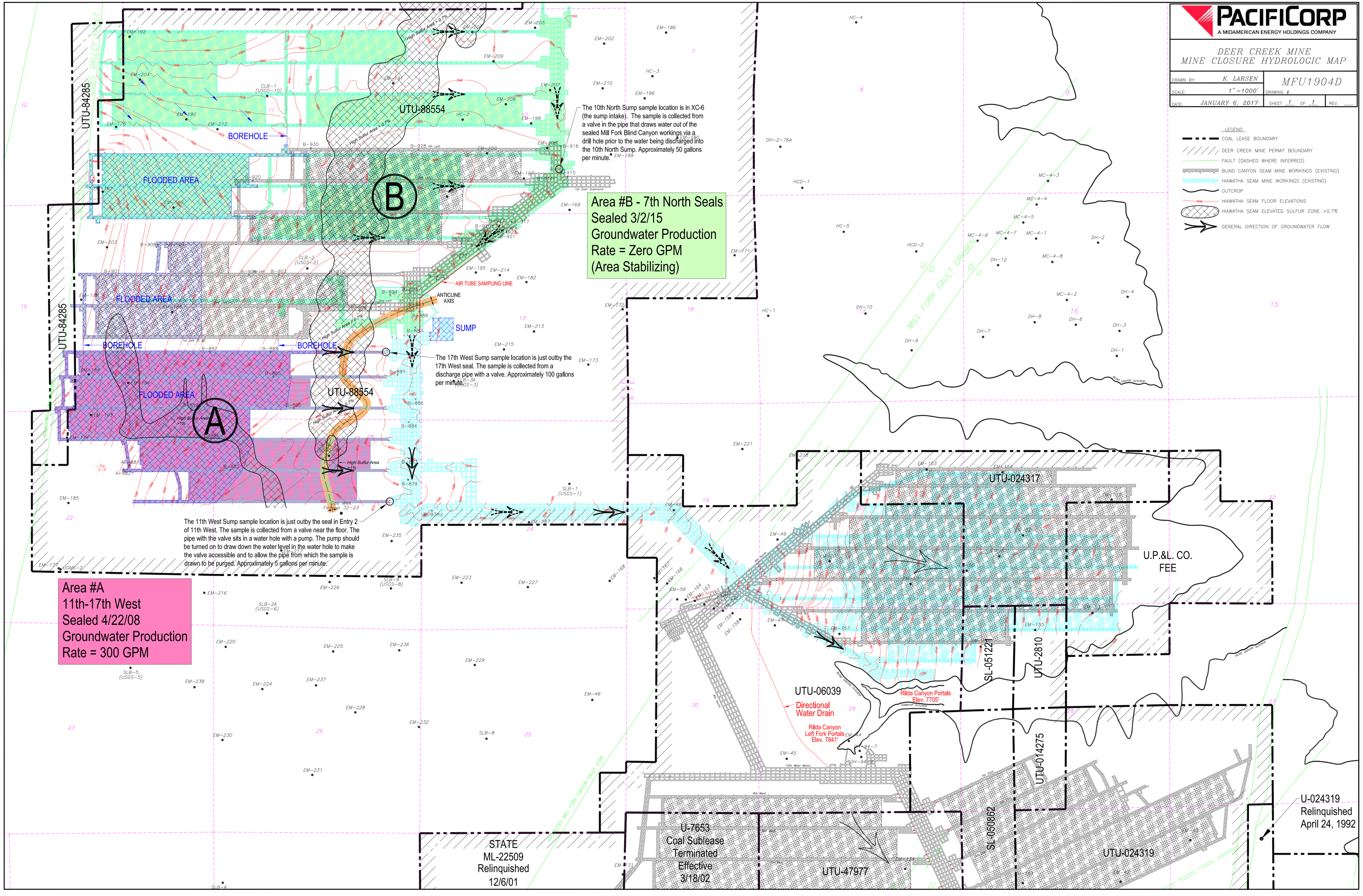

PACIFICORP
A MIDAMERICAN ENERGY HOLDINGS COMPANY

DEER CREEK MINE
MINE CLOSURE
WATER DIVERSION STRUCTURES/PORTAL PLUGS

| | | | |
|---|---|---|---|
| DRAWN BY: | K. LARSEN | MFU1905D | |
| SCALE: | 1" =600' | DRAWING #: | |
| DATE: | JANUARY 6, 2017 | SHEET 1 OF 1 | REV. |
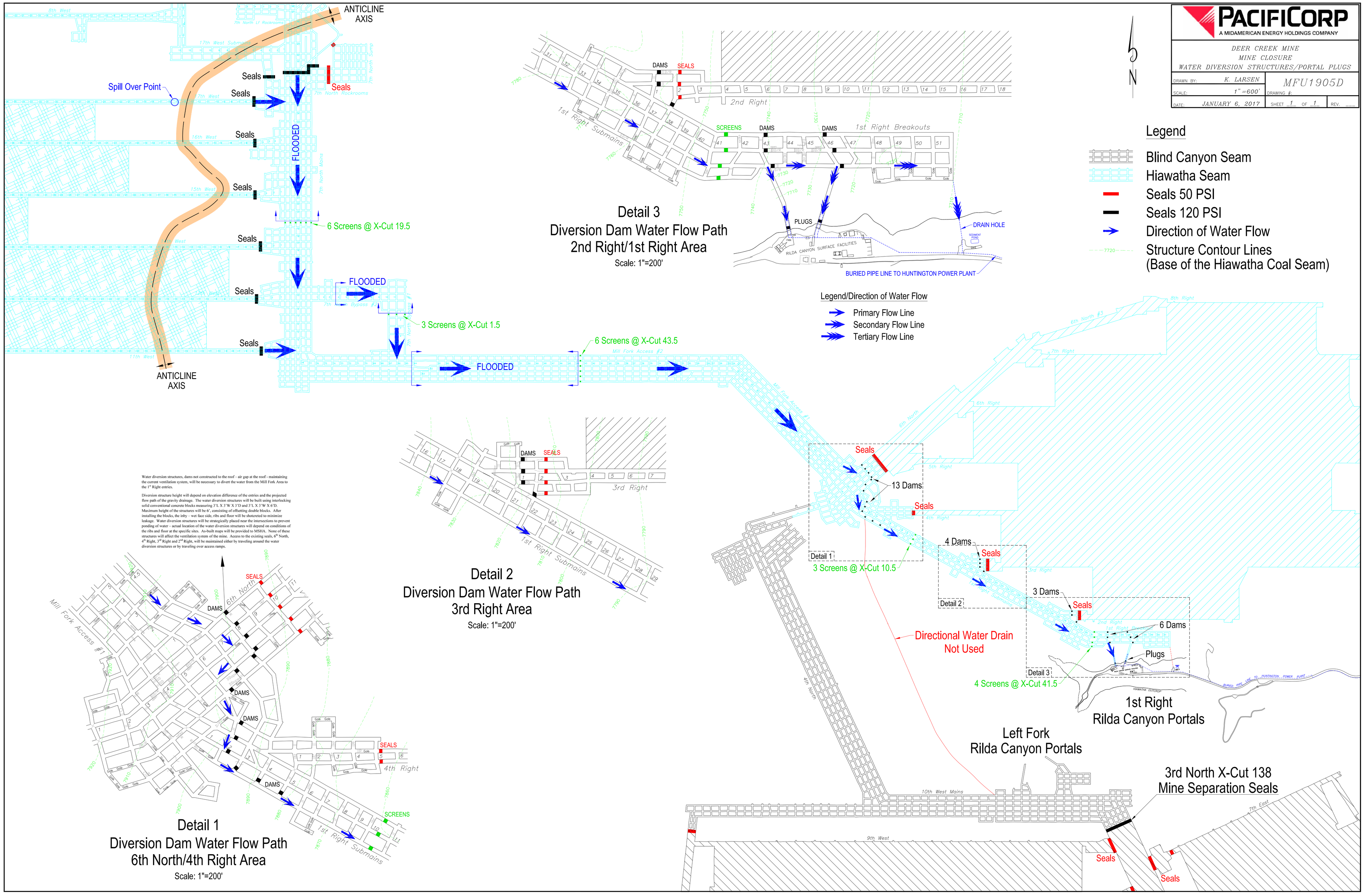
N