INTERWEST MINING COMPANY
A SUBSIDIARY OF PACIFICORP

Interwest Mining Company
Huntington Office
P. O. Box 310
15 North Main Street
Huntington, UT 84528

Utah Coal Program
Utah Division of Oil, Gas, and Mining
1594 West North Temple, Suite 1210
P.O. Box 145801
Salt Lake City, Utah 84114-5801

Electronically Submitted November 6, 2019

C/015/0018
Received 11/7/19
Task #6013

Subj: Amendment to Update Volume 11, North Rilda Portal Facilities to Include Post Reclamation As-Built Permit Information and Drawings, PacifiCorp, Deer Creek Mine, C/015/0018, Emery County, Utah.

PacifiCorp, by and through its wholly-owned subsidiary, Interwest Mining Company, as mine manager, hereby submits an "As-Built" amended Volume 11, Volume 11 Appendix Volume A, and Volume 11 Appendix Volume B. Final reclamation of the North Rilda Portal Facilities was completed in June, 2019. An aerial survey was performed at the completion of reclamation and the data compiled. Maps in this submittal show a revised disturbed area related to the final reclamation survey.

The amended chapters of Volume 11 include a discussion concerning the impact of the Trail Mountain Fire that occurred in 2018 affecting the North Rilda Portal Facilities. Several areas within the Rilda disturbed area have been impacted by the firefighting activities and shall remain as permanent features. These third party interference areas have been denoted on Figure C, Sheet 2 in the Introduction Section.

As part of the third party interference, Emery County has developed plans for construction of facilities to protect the North Emery Water Users Special Services District (NEWUSSD) spring collection site located near the topsoil storage area. Flood control construction will impact the areas adjacent to the NEWUSSD site as well as the entire topsoil storage area. The plans, approved and funded by an emergency fire and flood control program through the Natural Resource Conservation Services (NRCS), are included in this submittal.

Revisions to the Volume 11 Mining and Reclamation Plan of the North Rilda Portal Facilities include the following:

Volume 11, Introduction, replace entire chapter
Volume 11, Soils – replace entire chapter
Volume 11, Biology – replace entire chapter
Volume 11, Land Use – replace entire chapter
Volume 11, Engineering – replace entire chapter
Volume 11, Hydrology – amend selected pages
Volume 11, replace Maps – 500-1 (2 of 3), 500-3 (1 of 2, 2 of 2), 500-4 (1 of 4 thru 4 of 4), 500-5 (sheet 1)

Volume 11, Appendix Volume A – add text in TOC
Volume 11, Appendix Volume A – add Note after TOC
Volume 11, Appendix Volume A, Soils Section – add Appendix E
Volume 11, Appendix Volume B, Hydrology Section – replace Map 700-4 (Sheet 1)
Volume 11, Appendix Volume B, Hydrology Section – add Map 700-4 (Sheet 2)
Volume 11, Appendix Volume B, Hydrology Section – add Appendix E

Also included with this submittal are the required C1/C2 forms. Once this amendment is approved and the flood control project is completed as planned, Pacificorp will apply for a Phase III Bond Release of the 0.51 acre topsoil storage area. Plans show the topsoil storage area being regraded to support a riprapped and grouted berm and drainage as a permanent feature. Since no vegetation is required of this area, there are no vegetation standards required to satisfy.

As always, PacifiCorp is open to discuss this permitting activity further with the Division. If you have any questions or concerns regarding this submittal, please feel free to contact me at any time at 435-687-4712, or Dennis Oakley at 435-687-4825.

Sincerely,

Kenneth S. Fleck

Kenneth Fleck
Manager of Geology and Environmental Affairs

Enclosures
C1/C2 Forms
Volume 11, Introduction, replace entire chapter
Volume 11, Soils – replace entire chapter
Volume 11, Biology – replace entire chapter
Volume 11, Land Use – replace entire chapter
Volume 11, Engineering – replace entire chapter
Volume 11, Hydrology – amend selected pages
Volume 11, Maps – replace 500-1 (2 of 3), 500-3 (1 of 2, 2 of 2), 500-4 (1 of 4 thru 4 of 4), 500-5 (sheet 1)
Volume 11, Appendix Volume A – add text in TOC
Volume 11, Appendix Volume A – add Note after TOC
Volume 11, Appendix Volume A, Soils Section – add Appendix E
Volume 11, Appendix Volume B, Hydrology Section – replace Map 700-4 (Sheet 1)
Volume 11, Appendix Volume B, Hydrology Section – add Map 700-4 (Sheet 2)
Volume 11, Appendix Volume B, Hydrology Section – add Appendix E

Cc file

APPLICATION FOR COAL PERMIT PROCESSING

Permit Change ☒ New Permit ☐ Renewal ☐ Exploration ☐ Bond Release ☐ Transfer ☐

Permittee: PacifiCorp

Mine: Deer Creek Mine **Permit Number:** C/015/0018

Title: Amendment to Update Volume 11, North Rilda Portal Facilities to Include Post Reclamation As-built Permit Information and Drawings, PacifiCorp, Deer Creek Mine, C/015/0018, Emery County, Utah.

Description, Include reason for application and timing required to implement:

Instructions: If you answer yes to any of the first eight (gray) questions, this application may require Public Notice publication.

☐ Yes ☒ No 1. Change in the size of the Permit Area? Acres: _____ ☐ increase ☐ decrease.
☐ Yes ☒ No 2. Is the application submitted as a result of a Division Order? DO# _____
☐ Yes ☒ No 3. Does the application include operations outside a previously identified Cumulative Hydrologic Impact Area?
☐ Yes ☒ No 4. Does the application include operations in hydrologic basins other than as currently approved?
☐ Yes ☒ No 5. Does the application result from cancellation, reduction or increase of insurance or reclamation bond?
☐ Yes ☒ No 6. Does the application require or include public notice publication?
☐ Yes ☒ No 7. Does the application require or include ownership, control, right-of-entry, or compliance information?
☐ Yes ☒ No 8. Is proposed activity within 100 feet of a public road or cemetery or 300 feet of an occupied dwelling?
☐ Yes ☒ No 9. Is the application submitted as a result of a Violation? NOV # _____
☐ Yes ☒ No 10. Is the application submitted as a result of other laws or regulations or policies?
Explain: _____
☒ Yes ☐ No 11. Does the application affect the surface landowner or change the post mining land use?
☐ Yes ☒ No 12. Does the application require or include underground design or mine sequence and timing? (Modification of R2P2)
☐ Yes ☒ No 13. Does the application require or include collection and reporting of any baseline information?
☐ Yes ☒ No 14. Could the application have any effect on wildlife or vegetation outside the current disturbed area?
☐ Yes ☒ No 15. Does the application require or include soil removal, storage or placement?
☐ Yes ☒ No 16. Does the application require or include vegetation monitoring, removal or revegetation activities?
☒ Yes ☐ No 17. Does the application require or include construction, modification, or removal of surface facilities?
☐ Yes ☒ No 18. Does the application require or include water monitoring, sediment or drainage control measures?
☒ Yes ☐ No 19. Does the application require or include certified designs, maps or calculation?
☐ Yes ☒ No 20. Does the application require or include subsidence control or monitoring?
☐ Yes ☒ No 21. Have reclamation costs for bonding been provided?
☐ Yes ☒ No 22. Does the application involve a perennial stream, a stream buffer zone or discharges to a stream?
☐ Yes ☒ No 23. Does the application affect permits issued by other agencies or permits issued to other entities?

Please attach four (4) review copies of the application. If the mine is on or adjacent to Forest Service land please submit five (5) copies, thank you. (These numbers include a copy for the Price Field Office)

I hereby certify that I am a responsible official of the applicant and that the information contained in this application is true and correct to the best of my information and belief in all respects with the laws of Utah in reference to commitments, undertakings, and obligations, herein.

Kenneth Fleck — Print Name
Kenneth S. Fleck — Sign Name, Position, Date
Manager of Environmental Affairs NOVEMBER 6, 2019

Subscribed and sworn to before me this 6th day of November, 20 19

Miranda Lofley
Notary Public

My commission Expires: 03-26, 20 22

Attest: State of Utah } ss:
County of Emery

MIRANDA LOFLEY
NOTARY PUBLIC
STATE OF UTAH
COMMISSION # 699728
COMM. EXP. 03/26/2022

For Office Use Only:	Assigned Tracking Number:	Received by Oil, Gas & Mining

Form DOGM- C1 (Revised March 12, 2002)

APPLICATION FOR COAL PERMIT PROCESSING
Detailed Schedule Of Changes to the Mining And Reclamation Plan

Permittee: PacifiCorp
Mine: Deer Creek Mine **Permit Number:** C/015/0018
Title: Amendment to Update Volume 11, North Rilda Portal Facilities to Include Post Reclamation As-built Permit Information and Drawings, PacifiCorp, Deer Creek Mine, C/015/0018, Emery County, Utah.

Provide a detailed listing of all changes to the Mining and Reclamation Plan, which is required as a result of this proposed permit application. Individually list all maps and drawings that are added, replaced, or removed from the plan. Include changes to the table of contents, section of the plan, or other information as needed to specifically locate, identify and revise the existing Mining and Reclamation Plan. Include page, section and drawing number as part of the description.

			DESCRIPTION OF MAP, TEXT, OR MATERIAL TO BE CHANGED
☐ Add	☒ Replace	☐ Remove	Volume 11, Introduction, replace entire chapter
☐ Add	☒ Replace	☐ Remove	Volume 11, Soils – replace entire chapter
☐ Add	☒ Replace	☐ Remove	Volume 11, Biology – replace entire chapter
☐ Add	☒ Replace	☐ Remove	Volume 11, Land Use – replace entire chapter
☐ Add	☒ Replace	☐ Remove	Volume 11, Engineering – replace entire chapter
☐ Add	☒ Replace	☐ Remove	Volume 11, Hydrology – replace pages iii, 1, 62, 63, 73, 75, 76
☐ Add	☒ Replace	☐ Remove	Volume 11, replace Maps – 500-1 (2 of 3), 500-3 (1 of 2, 2 of 2), 500-4 (1 of 4 thru 4 of 4), 500-5 (sheet 1)
☐ Add	☒ Replace	☐ Remove	Volume 11, Appendix Volume A – add text in TOC
☒ Add	☐ Replace	☐ Remove	Volume 11, Appendix Volume A – add Note after TOC
☐ Add	☒ Replace	☐ Remove	Volume 11, Appendix Volume A, Soils Section – add Appendix E
☒ Add	☐ Replace	☐ Remove	Volume 11, Appendix Volume B, Hydrology Section – replace Map 700-4 Sheet 1
☐ Add	☐ Replace	☐ Remove	Volume 11, Appendix Volume B, Hydrology Section – add 700-4 Sheet 2
☐ Add	☐ Replace	☐ Remove	Volume 11, Appendix Volume B, Hydrology Section – add Appendix E
☐ Add	☐ Replace	☐ Remove	
☐ Add	☐ Replace	☐ Remove	
☐ Add	☐ Replace	☐ Remove	
☐ Add	☐ Replace	☐ Remove	
☐ Add	☐ Replace	☐ Remove	
☐ Add	☐ Replace	☐ Remove	
☐ Add	☐ Replace	☐ Remove	
☐ Add	☐ Replace	☐ Remove	
☐ Add	☐ Replace	☐ Remove	
☐ Add	☐ Replace	☐ Remove	
☐ Add	☐ Replace	☐ Remove	
☐ Add	☐ Replace	☐ Remove	
☐ Add	☐ Replace	☐ Remove	
☐ Add	☐ Replace	☐ Remove	

Any other specific or special instruction required for insertion of this proposal into the Mining and Reclamation Plan.	**Received by Oil, Gas & Mining**

PacifiCorp

Deer Creek Mine

C/015/0018

Volume 11 North Rilda Portal Facilities

Volume 11 – Introduction

Revise Entire Section Including the Addition of Figure C Sheet 2 of 2

Note: The Deer Creek Mine ceased production in January 2015. The southern portion of the mine was separated (by the construction of the 3rd North cross-cut 138 seals) from the Mill Fork Area and the portals at the Deer Creek Canyon facility. The ventilation portals at the 9th East breakouts were sealed and backfilled in March 2015. The North Rilda and Mill Fork area were active until 2017. In November 2017, the Rilda Canyon 1st Right portals were sealed and in December 2017 the Left Fork portals were sealed. Demolition of the Left Fork facility pad was completed in February 2018. As a result of the Trail Mountain fire, the USFS took over the site to construct sediment control structures within the disturbed area of the facility. PacifiCorp received Phase III Bond Release on the 2.33 acres of the Left Fork facility in January 2019.

Demolition on the Rilda Canyon portal facilities (aka 1st Right Facilities) was completed in September 2018. Earthwork was completed in June 2019. All information outlined in the following chapters of this volume pertaining to the operations of the Rilda Canyon portal facilities, the mine, coal recovery, mining methods, and subsidence control have been retained as a historic reference. Additions have been made to this information to show current status of the site. Updates to the chapters may be made periodically until bond release.

INTRODUCTION

In 1997, PacifiCorp received approval to expand its mining operations in Rilda Canyon (Refer to Figures A: Hiawatha Seam and Figure B:Blind Canyon Seam). This expansion involved increasing the size of the Deer Creek permit area by 1,960 acres. An additional 50 acres was added in 1998 upon completion of a lease modification to Federal Lease U-06039 (modification Number 2). In 2001, PacifiCorp applied and received approval to modify Federal Lease U-06039 for third time for an additional 65.7 acres (modification Number 3). Refer to Supplemental Volume, Legal and Financial Information for right-of-entry and permit boundary information.

Because of its northern location relative to the existing permit area and Rilda Canyon, the area of expansion is simply called the "North Rilda Area".

Mining expansion into the North Rilda Area was anticipated early in the permitting process. Because of this, the North Rilda Area was included in many of the baseline studies and on many of the mine permit maps i.e. geology, hydrology, soils, vegetation, land use, surface and subsurface ownership, and permit area maps.

Mining in the North Rilda Area was completed in August 2004 for all 2nd mining activities and November 2005 for all 1st mining activities. First mining activities included development of the 1st Right workings for the development of the Rilda Canyon portals.

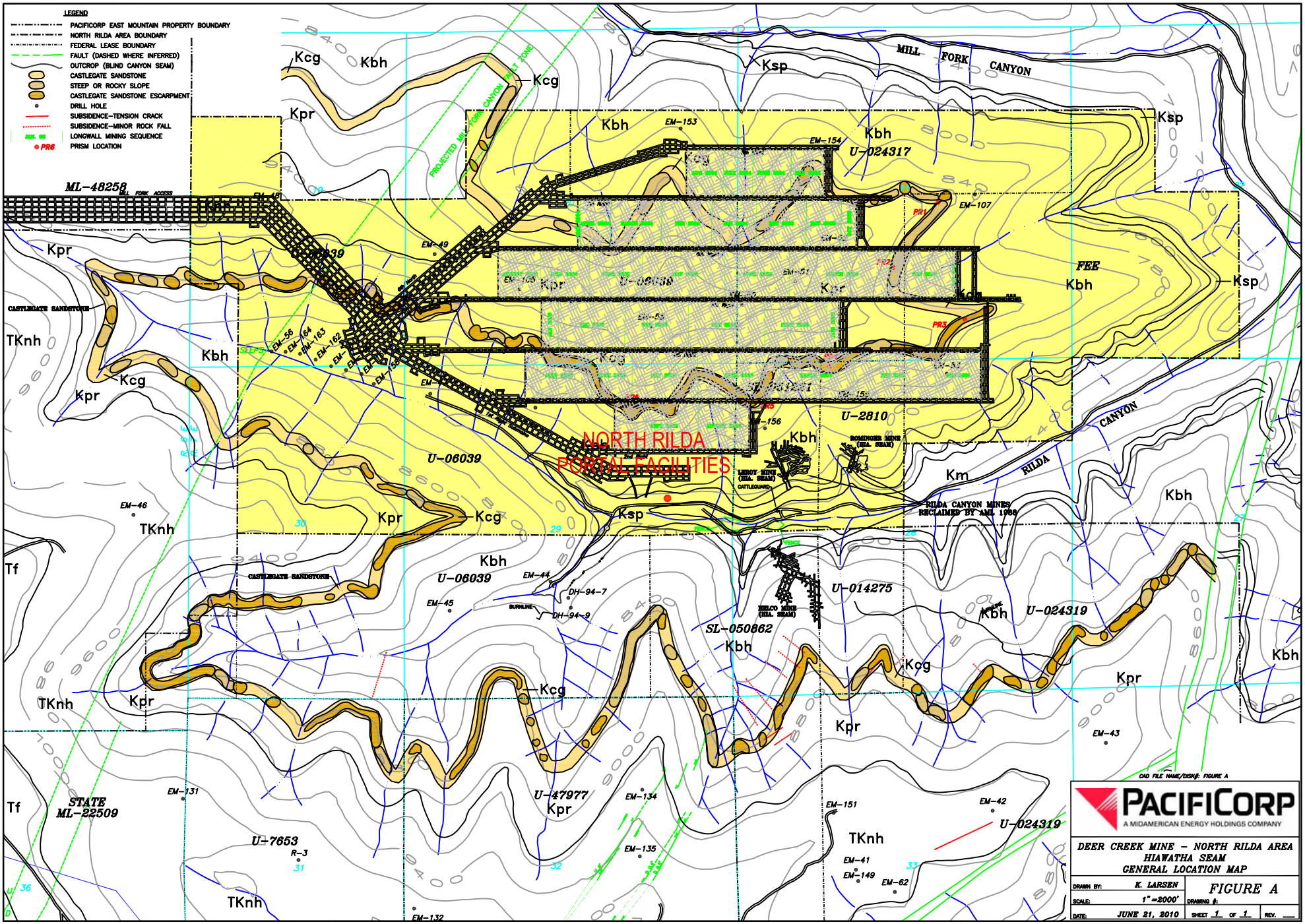
LEGEND
PACIFICORP EAST MOUNTAIN PROPERTY BOUNDARY
NORTH RILDA AREA BOUNDARY
FEDERAL LEASE BOUNDARY
FAULT (DASHED WHERE INFERRED)
OUTCROP (BLIND CANYON SEAM)
CASTLEGATE SANDSTONE
STEEP OR ROCKY SLOPE
CASTLEGATE SANDSTONE ESCARPMENT
DRILL HOLE
SUBSIDENCE-TENSION CRACK
SUBSIDENCE-MINOR ROCK FALL
LONGWALL MINING SEQUENCE
PRISM LOCATION
MILL FORK CANYON
RILDA CANYON
NORTH RILDA PORTAL FACILITIES
ML-48258
U-06039
U-024317
U-2810
U-014275
U-024319
SL-050862
U-47977
U-7653
STATE ML-22509
FEE
RILDA CANYON MINES RECLAIMED BY AML 1988
CASTLEGATE SANDSTONE
PROJECTED MILL FORK CANYON FAULT ZONE
Kcg
Kbh
Kpr
Ksp
Km
TKnh
Tf
EM-153
EM-154
EM-107
EM-49
EM-46
EM-44
EM-45
EM-131
EM-134
EM-135
EM-132
EM-151
EM-42
EM-41
EM-149
EM-62
EM-43
DH-94-7
DH-94-9
R-3
PR1
PR2
PR3
PR4
PR5
PR6
CAD FILE NAME/DISK#: FIGURE A
PACIFICORP
A MIDAMERICAN ENERGY HOLDINGS COMPANY
DEER CREEK MINE - NORTH RILDA AREA
HIAWATHA SEAM
GENERAL LOCATION MAP
DRAWN BY: K. LARSEN
FIGURE A
SCALE: 1" =2000'
DRAWING #:
DATE: JUNE 21, 2010
SHEET 1 OF 1
REV.

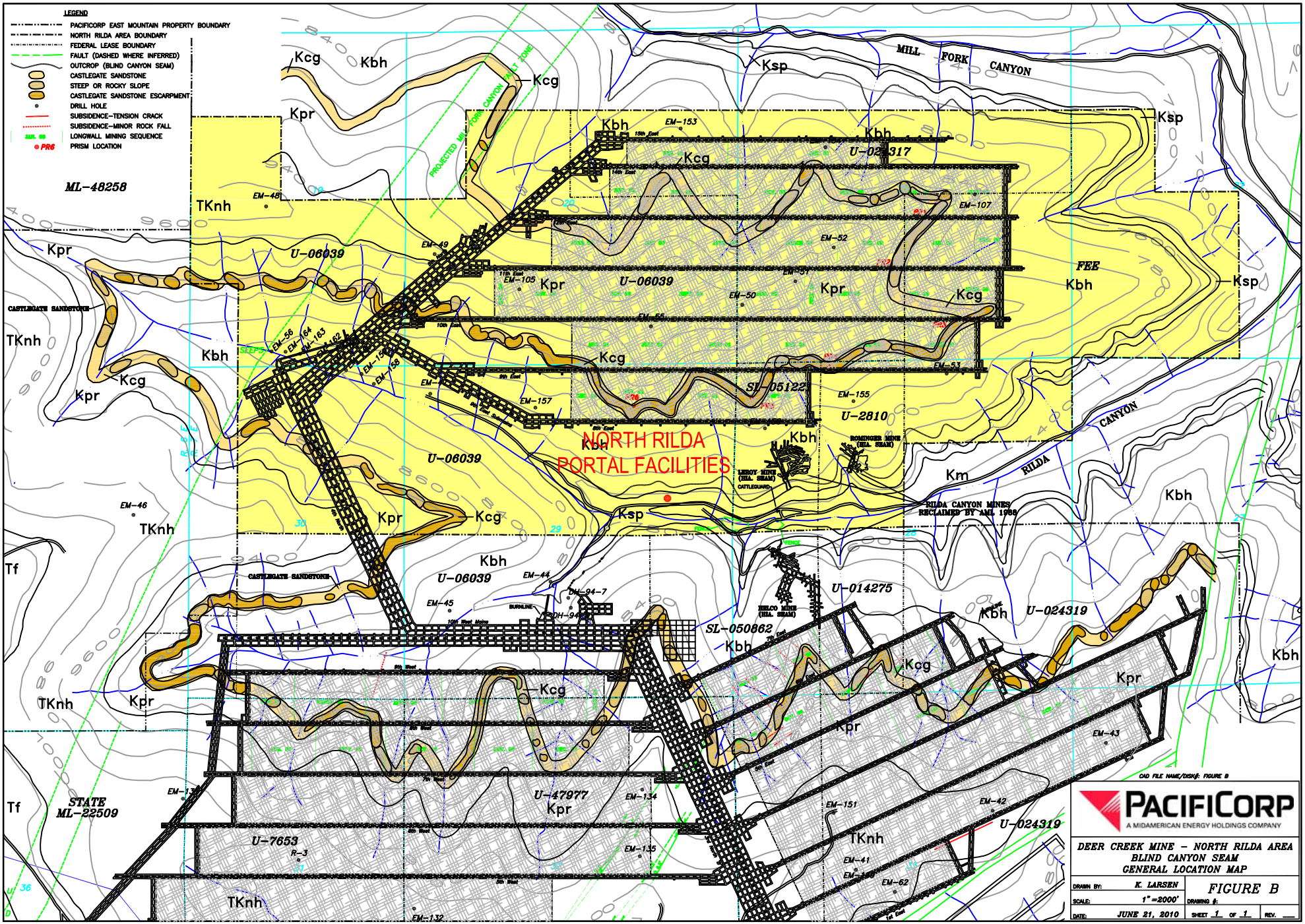
LEGEND
PACIFICORP EAST MOUNTAIN PROPERTY BOUNDARY
NORTH RILDA AREA BOUNDARY
FEDERAL LEASE BOUNDARY
FAULT (DASHED WHERE INFERRED)
OUTCROP (BLIND CANYON SEAM)
CASTLEGATE SANDSTONE
STEEP OR ROCKY SLOPE
CASTLEGATE SANDSTONE ESCARPMENT
DRILL HOLE
SUBSIDENCE-TENSION CRACK
SUBSIDENCE-MINOR ROCK FALL
LONGWALL MINING SEQUENCE
PRISM LOCATION
NORTH RILDA
PORTAL FACILITIES
MILL FORK CANYON
RILDA CANYON
PROJECTED MILL FORK CANYON FAULT ZONE
ML-48258
U-06039
U-02[illegible]317
SL-05122
U-2810
FEE
U-014275
U-024319
SL-050862
U-47977
U-7653
STATE ML-22509
RILDA CANYON MINES RECLAIMED BY AML 1988
CASTLEGATE SANDSTONE
TKnh
Kcg
Kbh
Kpr
Ksp
Km
Tf
CAD FILE NAME/DISK#: FIGURE B
PACIFICORP
A MIDAMERICAN ENERGY HOLDINGS COMPANY
DEER CREEK MINE - NORTH RILDA AREA
BLIND CANYON SEAM
GENERAL LOCATION MAP
DRAWN BY: K. LARSEN
SCALE: 1" =2000'
DATE: JUNE 21, 2010
FIGURE B
DRAWING #:
SHEET 1 OF 1
REV.

PacifiCorp acquired the Mill Fork Lease and entered into a COAL MINING LEASE AND AGREEMENT with the State of Utah on April 1, 1999. The coal tract as described in the lease contains approximately 5,562.82 acres, more or less. With the leasing of the Mill Fork Tract in 1999, PacifiCorp controls through ownership and leasing certain fee coal lands together with assigned federal coal leases nearly 30,000 acres of contiguous minable property located in Emery County, Utah. PacifiCorp submitted an application to include the Mill Fork Lease within the Deer Creek Mine permit in November 2001. The application was approved on March 5, 2003. This expansion involved increasing the acreage of the Deer Creek permit by 5,562.82 acres. Because of the geographic location, the proposed new area of expansion is referred to as the "Mill Fork Permit Area", refer to Volume 12.

After the acquisition of the Mill Fork Lease, PacifiCorp investigated multiple alternatives to access the coal reserves located to the northwest of the North Rilda Area. The process has included:

- Application for lease modification to physically connect the Mill Fork tract (State Lease) to the existing federal leases controlled by PacifiCorp (submitted November 2001 [originally submitted as a right-of-way application in November 2000]). Federal Coal Lease U-06039 was modified to include an additional 65.7 acres to allow the boundaries of the federal lease to become contiguous with State Lease ML-48258 (approved December 14, 2001)
- Submission of Incidental Boundary Change application to amend the Deer Creek permit to include the lease modification area (approved January 2001).
- Surface coal exploration programs have been conducted to evaluate the coal reserve characteristics (2000-2004).
- Mine plans have been developed based on results of the coal exploration programs. As outlined in Volume 12, access to the Mill Fork lease is accomplished through a set of main entries developed in the Hiawatha seam driven in a westerly direction along the southern most lease boundary.
- PacifiCorp evaluated long term options to improve overall underground transportation and economic considerations.
- Options investigated included:
    - Acquisition of Crandall Canyon Mine
    - New portal facilities in Mill Fork Canyon
    - New portal facilities in Rilda Canyon
        - In-seam horizontal drilling was conducted to evaluate potential location of portal facilities.
- As a result of extensive investigation, PacifiCorp selected Rilda Canyon as the best option based on the following:
- Environmental Considerations
    - Facilities are located in an area previously disturbed by mining
    - Surface facilities are designed to accommodate materials only. Coal mined from the Hiawatha (lower) and Blind Canyon (upper) seams will continue to be shipped through the existing Deer Creek mine workings to the portal

in Deer Creek Canyon. From this point, the coal will be transported to the Huntington Power Plant coal storage area via the existing overland beltline. Only surplus production beyond the Huntington Plant needs will be trucked on the highway from the plant.

- Engineering Considerations
  - Facilities designed and built to minimize surface disturbance; Sequencial construction includes construction of a fan/portal pad with material storage, sediment basin, pond, and topsoil and rock storage areas (covering 7.3 acres).
  - Utilization of existing infrastructures (roads, powerline)
  - Business Considerations
  - PacifiCorp and Andalex Resources were unable to arrive at a workable agreement utilizing the Crandall Canyon Mine due to Andalex's continuation of mining with the South Crandall Lease.

Initially, the facilities were proposed in an area disturbed by previous mining operations. However, due to concerns related to culverting some 1,500 feet of perennial stream that were expressed by the Army Corp of Engineers, environmental groups, etc., PacifiCorp chose to move the proposed facility site up canyon approximately ½ mile. The facilities disturbed area was initially proposed to cover approximately 9.0 acres with and additional 4.1 acres for soil storage. Facilities were to include a bathhouse, warehouse, shop, parking, water treatment and sewage system. However because of dwindling minable coal reserves, full facility construction was not economical. The Rilda Portal facility was reduced to only serve as a fan pad and material access way.

Construction of the Rilda Portal facility was completed in 2009 and was operated until 2018. The mine site disturbance (as constructed) was 6.77 acres plus a 0.51 acre soil storage east of the facility. Both intake and fan portals were sealed in November 2017. At closing however, PacifiCorp planned for a mine water discharge from the Rilda Canyon portals. Because the portals are located within a Category 1 Water Designation (see definition in UAC R317.2), both portals have infiltration galleries constructed behind 25 foot solid concrete portal plugs to collect mine water into a piping system. The pipe system exits the portals and is installed from the portal area to the Huntington Power Plant raw water pond where it discharges.

Final reclamation earthwork on this facility was completed in June of 2019.

PERMIT ORGANIZATION

The following sections of this mining application pertain to all applicable coal mine permit application requirements of the Utah R645-Coal Mining Rules (revised May 1, 1998). Applicable sections herein include:

Volume 11

Introduction
R645-301-100. General Information
R645-301-200. Soils
R645-301-300. Biology
R645-301-400. Land Use and Air Quality
R645-301-500. Engineering
R645-301-600. Geology
R645-301-700. Hydrology
R645-301-800. Bonding

Volume 11 Appendix Volume, Volume A

Table of Contents
Soils
Biology
Land Use
Engineering (separate binder)

Volume 11 Appendix Volume, Volume B

Geology
Hydrology

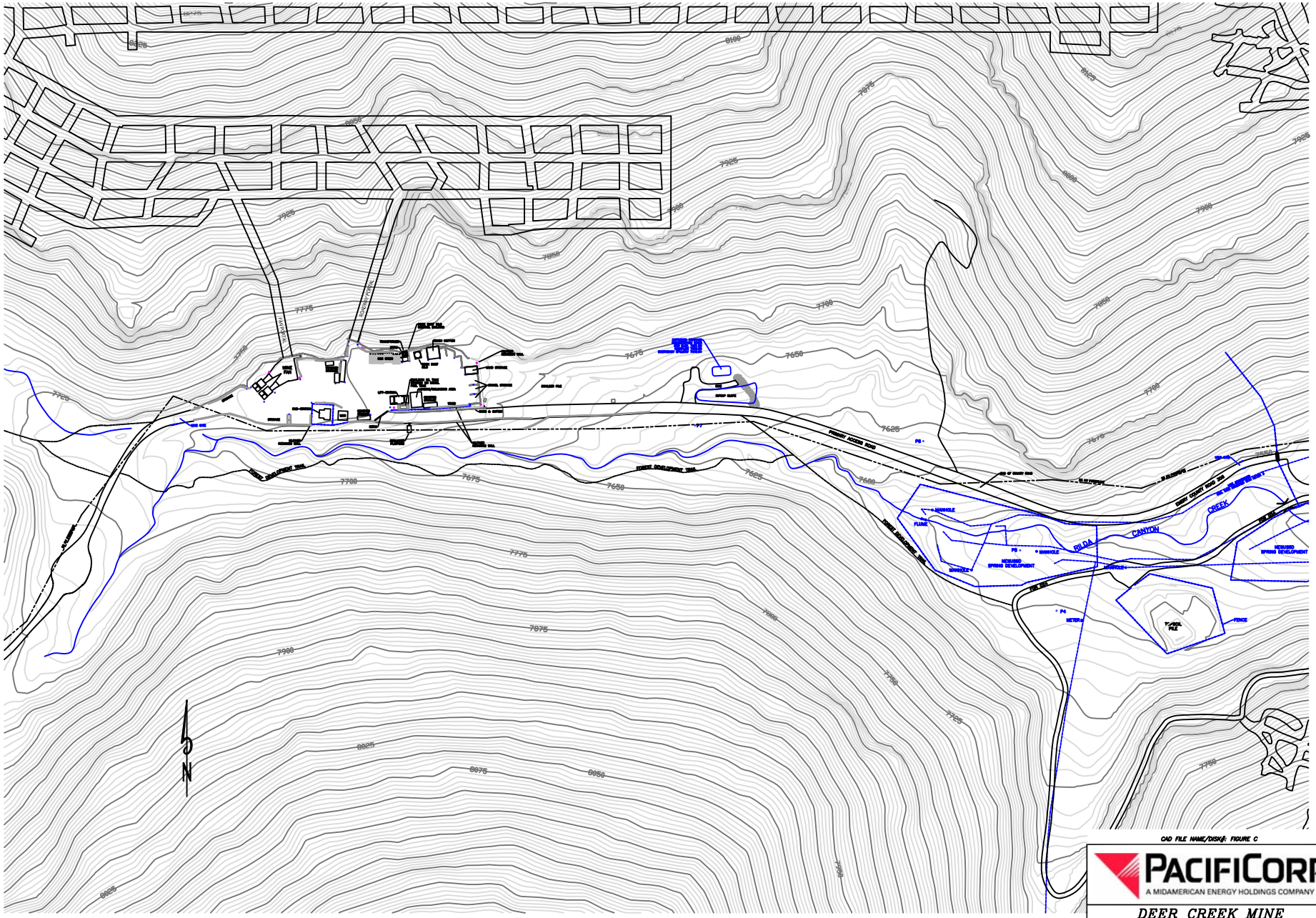

CAD FILE NAME/DISK#: FIGURE C

PACIFICORP
A MIDAMERICAN ENERGY HOLDINGS COMPANY

DEER CREEK MINE
NORTH RILDA
PORTAL FACILITIES

DRAWN BY:	K. LARSEN	FIGURE C	
SCALE:	1" =300'	DRAWING #:	
DATE:	JUNE 21, 2010	SHEET 1 OF 2	REV. ___

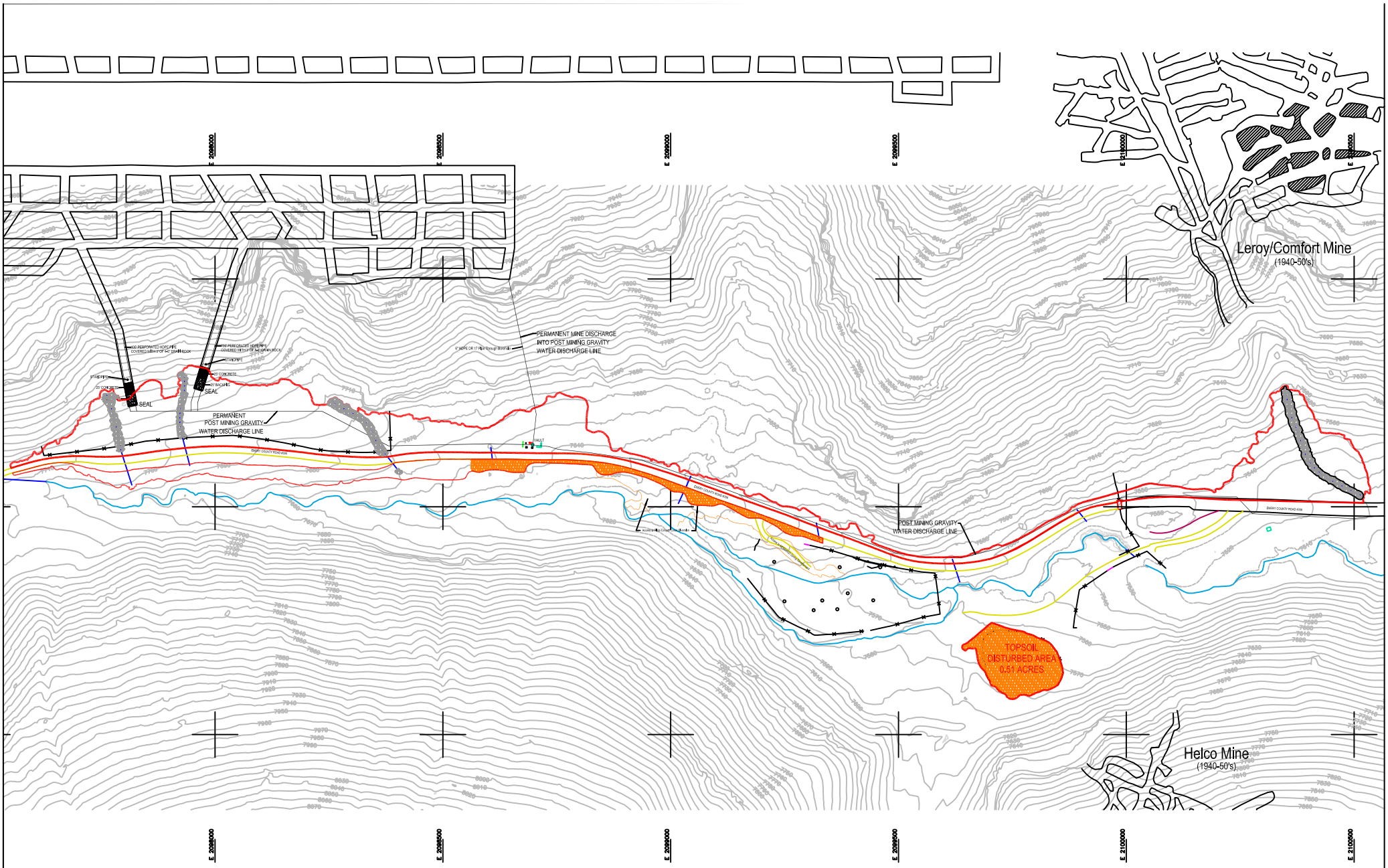

LEGEND

DISTURBED BOUNDARY POST RECLAMATION

USFS TRAIL MOUNTAIN WILDFIRE THIRD PARTY INTERFERENCE (0.79 Acres)

CAD FILE NAME/DISK#: INTRO FIGURE C

PACIFICORP
A BERKSHIRE HATHAWAY ENERGY COMPANY

DEER CREEK MINE
RILDA CANYON
POST RECLAMATION TOPOGRAPHY

DRAWN BY: C. SEMBORSKI		FIGURE C
SCALE: 1" – 300'		DRAWING #:
DATE: AUGUST 13, 2019	SHEET 2 OF 2	REV. ___

PacifiCorp

Deer Creek Mine

C/015/0018

Volume 11 North Rilda Portal Facilities

Volume 11 – Soils

Revise Entire Section

R645-301-200 SOILS SECTION

TABLE OF CONTENTS

R645-301-210 INTRODUCTION....1

R645-301-220 ENVIRONMENTAL DESCRIPTION....2

R645-301-221 PRIME FARMLAND INVESTIGATION....2
R645-301-222 SOIL SURVEY....3
R645-301-222.100 Map Delineating Soils....5
R645-301-222.200-300 Soil Identification and Descriptions....6
R645-301-222.400 Potential Productivity of Soils....11
R645-301-223 SOIL CHARACTERIZATION....11

R645-301-230 OPERATION PLAN....12

R645-301-231 GENERAL REQUIREMENTS....12
R645-301-231.100 Methods for Removing and Storing Topsoil, Subsoil....12
R645-301-231.200 Demonstration of Suitability....14
R645-301-231.300 Test Plan for Evaluating the Results of Topsoil Handling and Reclamation Procedures....15
R645-301-231.400 Construction and Maintenance of Topsoil Handling and Storage....15
R645-301-232 TOPSOIL AND SUBSOIL REMOVAL....16
R645-301-232.500 Subsoil Segregation....17
R645-301-232.600 Timing....17
R645-301-233 TOPSOIL SUBSTITUTES AND SUPPLEMENTS....19
R645-301-234 TOPSOIL STORAGE....20

R645-301-240 RECLAMATION PLAN....21

R645-301-242 SOIL REDISTRIBUTION....21
R645-301-243 SOIL NUTRIENTS AND AMENDMENTS....22
R645-301-244 SOIL STABILIZATION....23

R645-301-250 PERFORMANCE STANDARDS....23

LIST OF APPENDICES

(Refer to Volume 11: Appendix Volume)

Appendix A*	Report: Soil Inventory and Assessment, Rilda Canyon Portal and Facilities Site, Deer Creek Mine, EIS Environmental and Engineering Consulting, May 2004.
Appendix B*	Report: Soil Survey Report of the New North Rilda Canyon Portal Facilities Area, Mt. Nebo Scientific, July 2004. Soil Storage Addendum March 2005.
Appendix C	Prime Farmland Determination: NRCS, October 2004.
Appendix D	Report: Order 3 Soil Survey, Rilda Canyon and Huntington Canyon areas, NRCS, Web Soil Survey report, generated March 27, 2017.
	Prime Farmland Determination: NRCS, March 2017.
Appendix E	Post Reclamation Soil Analysis and Sample Location Map

LIST OF MAPS

200-1	Soils Classification Map*
200-2	Soils Stripping and Storage Location Map*

* Note: Soil Inventory and Assessment Reports, Soil Survey Reports, and Soil Maps (reported by 3rd party consultants) report additional areas within the project area that have been evaluated. These areas include the once proposed subsoil stockpile area, and potential miscellaneous storage and reference areas in the lower parts of Rilda Canyon. These areas were evaluated during the initial planning stages for the project. However, because the project scope was significantly revised which decreased the footprint of the disturbed area, those additional areas are not included within the as-built boundaries of the Rilda Portal Facilities.

R645-301-210 INTRODUCTION

Mining in the Rilda Canyon area has been conducted since the 1940's. Four historic mines (Helco Mine, Leroy Mine, Jeppson Mine, and Rominger Mine) are located in Rilda Canyon that were reclaimed by Abandoned Mined Lands in 1988. In 1995, PacifiCorp expanded its Deer Creek Mining operations into the North Rilda area. Approximately 23 million tons of minable coal was anticipated to be mined from this area during life-of-mine production. Surface ventilation facilities were constructed in the Left Fork of Rilda Canyon to provide for ventilation to the North Fork area. Because of the need to expand the mining operations farther to the northwest (Mill Fork State Lease #48258), surface facilities are required in Rilda Canyon. Initially, a full mining complex was proposed and plans were submitted and approved by the Utah Division of Oil, Gas, and Mining (UDOGM). This proposal included all support facilities for underground mining operations excluding coal transportation. The actual and final construction of the North Rilda Canyon Portal facilities (completed 11/2008) includes two portals, facility pad, fan, electrical facilities, storage facilities, soil storage, and drainage control facilities. Actual total disturbance totals approximately 7.3 acres.

In January 2015, the Deer Creek Mine ceased production and began mine closure activities. The southern portion of the mine was separated (by the construction of the 3rd North cross-cut 138 seals) from the Mill Fork Area and the portals at the Deer Creek canyon facility and the ventilation portals at the 9th East breakouts were sealed and backfilled in March/April 2015. The only active portion of the Deer Creek Mine ~~is~~ was accessed through the Left Fork portals and Rilda Canyon Portal Facilities. Ventilation and water pumping activities ~~are~~ were the only operations occurring in the North Rilda and Mill Fork areas of the underground mine. The 1st Right Fan was taken off-line in March 2015 and the portals sealed in November 2017. The Left Fork fan ~~is the only operating fan for the Deer Creek Mine.~~ was taken off line in December of 2017 and the portals sealed. Demolition of this facility was completed in February 2018. The Division of Oil, Gas and Mining approved Phase III bond release in January 2019.

As part of the mine closure activities, PacifiCorp ~~is~~ ~~planning~~ planned and constructed a post-mine water drain~~age~~ line. The drainage ~~will be~~ is routed via pipeline (see discussion and design in the Engineering Section) from the 1st Right portals (lowest elevation portals) at the Rilda Canyon Portal Facilities to the Huntington Power Plant raw water pond. The temporary impact area (which includes pipeline right of way + potential laydown areas + potential treatment plant area) is approximately 12 acres. Because the area between the two locations have not historically been include in the permit area boundary, PacifiCorp ~~is~~ ~~expanding~~ expanded its permit area to include the route of the pipeline in Rilda and Huntington canyons. Refer to Legal and Financial Volume, Appendix G for the expanded permit boundary description.

Five soil surveys or investigations have been conducted in the Rilda Canyon area: Gainer, 1983, Furst 10/90, Furst, 12/91, EIS Environmental and Engineering Consulting, 5/04, and Nyenhuis, 7/04. The soils investigation provided by Furst can be found in Volume 1, Part 2 (Environmental Resources), pages 2-181.1 through 2-181.39. These reports discuss soil resources of the Left Fork of Rilda Canyon. The EIS report discusses soil resources in the area of the historic Leroy, Jeppson, and Rominger mines, refer to Volume 11 Appendix Volume - Soils: Appendix A. This area was

initially proposed for surface facilities. However, because of concerns of culverting approximately 1500 feet of the Rilda Creek, the site location was moved approximately ½ mile up canyon. The Nyenhuis report discusses soil resources of the Rilda Canyon Portal Facilities; refer to Volume 11 Appendix Volume - Soils: Appendix B.

To discuss the soils along the pipeline corridor in Rilda and Huntington canyons, an Order 3 soil survey ~~has been~~ was conducted of this area in 2017. The survey was conducted by PacifiCorp using the NRCS Web Soil Survey program found on-line at https://websoilsurvey.nrcs.usda.gov/app/ and a soil survey obtained from the Manti-La Sal National Forest. Refer to Appendix D for the full report.

Soil segregation locations have been established in the Left Fork Rilda Canyon Fan Facilities area (~~refer Volume 4 Map 2-17A~~ Phase III bond release in January 2019) and the Rilda Canyon Portal Facilities area (refer to Map 200-1, Soils Stripping and Storage Location Map). These areas store segregated topsoil from each of the disturbed areas.

The following sections detail investigations of the soil environment in Rilda Canyon. Through these investigations, detailed procedures are designed for the removal and storage, sampling, analysis, and replacement of soil during reclamation of the disturbed sites.

R645-301-220 ENVIRONMENTAL DESCRIPTION

The Rilda Canyon Portal Facilities are located on the north side of Rilda Canyon, a tributary of Huntington Creek. The surface facilities (final reclamation June 2019) are located in an east-west trending canyon below the intersection of the right and left forks of Rilda Canyon. The elevation differences in the area of the mine site range from approximately 7,500 feet above mean sea level near the soil storage area to 7,725 feet near the forks of Rilda Canyon.

R645-301-221 Prime Farmland Investigation

As stated in the regulations, all permit applications, whether or not Prime Farmland is present, will include the results of a reconnaissance inspection of the permit area to indicate whether Prime Farmland exists as given under R645-302-313.

PacifiCorp has consulted with the National Resources Conservation Service (formally the Soil Conservation Service) on ~~three~~ four separate occasions for Prime Farmland Determination related to the Deer Creek Mine permit boundary;

- November 10, 1983 (refer to Volume 1, pages 2-215 through 2-2118)
- March 27, 1991 (refer to Volume 1, pages 2-218.1 through 2-218.2)
- October 14, 2004 (refer to Volume 11 Appendix Volume Soils: Appendix C)
- March 28, 2017 (refer to Volume 11 Appendix Volume Soils: Appendix D)

Based on the NRCS investigations of all of the lands within the Deer Creek Mine area (including the Rilda Canyon Portal Facilities and expanded pipeline corridor) these lands do not qualify as "Prime Farmland" for the following reasons:

- Soils contain more than 10% percent surface rock fragments, or
- Percent slope multiplied by K (erodibility factor) exceeds 2
- Area is above all existing irrigation systems
- Area is within an existing road right of way

R645-301-222 Soil Survey

Previous Studies

The soils in the area have been included in previous baseline studies of the general permit area. Furthermore, the soils of the area have been mapped previously by the operator in anticipation to include the area for future mining (see Volume 4, Map 2-16, "Future Permit Area"). A field survey of the soils of the permit area was conducted by T.H. Furst in 1990. Field work and laboratory analyses of Soil Pedon 3 in the study described and classified the soils mapped in the North Rilda Area. The soils have been classified as mixed Typic Cryoborolls, loamy-skeletal, 25-40% slopes. The pedon contained >0.6% organic carbon throughout the soil solum, and the percent base saturation was most likely >50% throughout the soil solum (inferred from the pH). Soil textures ranged from sandy loam in the A and Bw1 horizons to loam in the Bw2 horizon. Electrical conductivity ranged from 0.4-0.5 mmhos/cm and the sodium adsorption ratio for all horizons was less than 3.4. Soil reaction (pH) ranged from 8.0 to 8.1. SAR values were also low enough to be rated as "good" by DOGM guidelines. Alkalinity (HCO_3) was less than 4 meq/L, whereas, the saturation percentages of all horizons ranged from 44.6% to 52.6%. Available water capacity ranged from 0.10 to 0.15 inches of water per inch (depth) of soil. Calculations of the total available water revealed that about 3.6 inches of water would be available on a whole pedon basis when the displacement of soil material by coarse fragments was taken into account.

The soils were generally described "as a dark grayish brown loamy surface layer about 40 cm thick, underlain by a pale brown clay subsoil 40 cm thick, over a light gray calcareous substratum with up to 50% sandstone fragments". A general soil map for the permit area which includes the North Rilda Area has been provided as Volume 4, Map 2-16 in the Deer Creek MRP. For additional information about the soils in the area refer to Volume 1, Part 2 of the MRP.

2003-2004 Studies

PacifiCorp retained Environmental Industrial Services (Soil Scientist: Dan Larsen) to conduct a soil inventory to aid in the development and reclamation associated with the expansion of the Deer Creek Mine in Rilda Canyon. The EIS report discusses the inventory and assessment of soil resources of the historic mining areas of the Leroy and Rominger mines. This report is included since an area below the Leroy Mine portal area is proposed for disturbance.

PacifiCorp has constructed a sedimentation pond within this area. The EIS report lists this area as soil map unit D "disturbed". This soil consists of mixed soil materials and waste coal. The area below the Leroy Mine had been previously reclaimed. Two soil pits revealed a layer of about one to two feet of cobbly sandy loam soil over waste coal materials in most areas. Waste coal deposits are up to eight feet in depth.

As stated earlier, PacifiCorp's original proposal was to construct the facilities in the area of the historic Leroy, Jeppson, and Rominger mines. However, because of concerns of culverting approximately 1500 feet of the Rilda Creek, the site location was moved approximately ½ mile up canyon. As a result, PacifiCorp retained Mr. Jim Nyenhuis, Certified Professional Soil Scientist/Soil Classifier (ARCPACS 2753), to map the revised location at the Order 1 level of intensity for the area, refer to Volume 11 Appendix Volume - Soils: Appendix B. The study area was approximately 16 acres in size and was composed of the proposed surface facility area, intersection of the right and left forks, and the alluvial bottom to the south of the facilities. Field work including soil sampling was completed in July 2004. Pacificorp contracted Mr. Jim Nyenhuis to supplement the initial study of the facilities near the intersection of the right and left forks to include an in-depth analysis of the topsoil and subsoil storage areas. Topsoil/subsoil material was proposed to be stockpiled at separate locations approximately 0.5 miles down canyon from the mine site. The topsoil site is located away from any drainage's in a fairly flat previously disturbed area directly below the reclaimed Helco Mine portal site. The subsoil/construction fill site (not used for soil storage) was planned for locating in Rominger Canyon. The canyon was previously disturbed to access the Rominger and Jeppson coal mines. Appendix B has been amended in to include soil descriptions and sampling analysis of the soil storage locations.

Note: In May 2019 all topsoil was removed from the topsoil storage site and placed on the reclaimed portal pad (final reclamation was completed in June 2019). Emery County, through funding by the Natural Resource Conservation Service (NRCS), has plans for constructing sediment control and diversion structures over the area of the 0.51 acre topsoil storage area (refer to Volume 11, Appendix Volume, Hydrology, Appendix E for plans and designs). These structures will protect the North Emery Water Users Special Services District (NEWUSSD) spring collection area from high sediment loaded storm water runoff generated as a result of the 2018 Trail Mountain Fire that burned the areas above the site. No salvaged soils will be used in this location and no vegetation will be planted. Therefore, success standards for vegetation will not apply.

2017 Pipeline Corridor Survey

Although the construction of the post-mine gravity drainage system ~~will~~ be was constructed within the Emery County Road #306 and SR31 rights-of-way and will consists of a mix of native and borrow soils, soil map units throughout this area are identified. Those areas lying within USFS boundary were also identified.

Using the Natural Resource Conservation Service (NRCS) Web Survey found at https://websoilsurvey.nrcs.usda.gov/app/, PacifiCorp ~~has~~ identified 13 soil map units within

the pipeline corridor of the extended permit area outside the USFS boundary. Those soil mapping units are listed below:

1) 006 – Badland-Rubble land-Rock outcrop com;lex, 45 to 200 percent slopes.
2) 021 – Bumkin-Rock outcrop- Zigzag complex, 40 to 70 percent slopes.
3) 035 – Datino gravelly loam, 35 to 70 percent slopes.
4) 045 – Foy-Podo-Rangecreek association, 20 to 70 percent slopes.
5) 051 – Gerst-Strych-Badland complex, 30 to 70 percent slopes.
6) 130 – Podo-Rock outcrop complex, 40 to 70 percent slopes.
7) 132 – Porser very stony fine sandy loam, 3 to 20 percent slopes.
8) 154 – Shupert-Dancehall complex, 40 to 75 percent slopes.
9) 171 – Tosca-Minnimaud-Pathead complex, 12 to 50 percent slopes.
10) 172 – Tosca-Rockoutcrop-Paunsaugunt complex, 45 to 80 percent slopes.
11) 182 – Wuby-Dation complex, 40 to 75 percent slopes.
12) 185 – Zigzag-Badland-Rubble land complex, 45 to 80 percent slopes.
13) 186 – Zigzag-Poser-Badland complex, 25 to 70 percent slopes.

PacifiCorp contacted the USFS Manti-La Sal National Forest and obtained the soil survey for the pipeline corridor in Rilda Canyon within the USFS boundary. Two soil map units are found for this area and are listed as followed

1) 7 – Shupert-Winetti families, 2 to 8 percent slopes
2) 20 – Styrch-Pathead-Wiggler families, 30 to 80 percent slopes.

A description of each of the soil map units is found in Volume 11A Appendix Volume, Soils: Appendix D along with a map showing the location of each soil map unit.

R645-301-222.100 Map Delineating Soils

A site specific, Order 1 soils survey for the mine site area was performed by Mr. Jim Nyenhuis and Dan Larsen during 2003 and 2004. Detailed reports of the on-site field work and laboratory analyses along with soil maps are presented in Volume 11 Appendix Volume - Soils: Appendix A & B.

An Order 3 soils survey for the proposed pipeline corridor was generated by Interwest Mining Staff using the NRCS Web Soil Survey and contacts at the USFS Manti-La Sal National Forest. A map delineating the soil map units are found in Volume 11 Appendix Volume - Soils: Appendix D.

R645-301-222.200-300 Soil Identification and Descriptions

Soil types of the disturbed area are identified on maps located in Volume 11 Appendix Volume - Soils: Appendix A 2003-4 EIS report: Sediment Pond Area and Appendix B, 2004 Mt. Nebo Report: Mine Facility and Soil Storage areas. During 2003 and 2004, Mr. Dan Larsen, Soil Scientist from EIS and Mr. Jim Nyenhuis from MT. NEBO conducted field mapping of the mine facility, sediment pond and soil storage areas. Soil profiles were exposed either by hand tools or a backhoe to examine the full soil sequence at various locations around the disturbed area. Soil sampling and subsequent analyses were used to determine suitability for reclamation purposes. Soils data from previous investigations conducted in the 1990's, as well as aerial photography, and detailed site investigations were used to define the boundaries of each map unit. This information was then used to prepare a detailed map unit description for each of the mapping units delineated during the Order 1 Survey at the mine site sediment pond and soil storage areas (refer to Map 200-1).

Five map units were within the study area:

- Map Unit A Alluvium Bottomland Soils
- Map Unit B Steep Rocky Slopes, Haplustepts, Ustorthents
- Map Unit E Colluvial Toeslopes, Bench (referred to Map Unit C by EIS: Appendix A)
- Map Unit F Steep Facing Slopes; Cryoborolls
- Map Unit D D: Disturbed Land, Soil, Coal, Stones, Fill Material
  DR: Disturbed Land (Old Mine Access Road)
  DF: Disturbed Fan Site (Leroy Portal Area)
  RD: Rilda Canyon Road (Emery County #306)

Pedon Descriptions

Map Unit A: Alluvial Bottom Land Soils

Alluvial bottomland (Map Unit A) is located along Rilda Creek and in the confluence area of the Left and Right Forks of Rilda Creek. Alluvial bottomland is south of the Rilda Canyon Road and will not be disturbed by mining activities. An area within the bottomland along the Right Fork of the Rilda Creek, near the confluence with the Left Fork of Rilda Creek, includes the study area for the proposed relocation of the Spring Collection system for the North Emery Water Users Special Services District. Slope range of the map unit is 0 to 15 percent. Vegetation within the alluvial bottomland is a mixture of Douglas fir, aspen, and spruce with an understory of grasses and grape holly. Elevation ranges from about 7,600 to 7,750' MSL. The map unit is considered to be in a "frigid" soil temperature regime.

Soils within Map Unit A are very deep (>60" to bedrock), well to somewhat poorly drained, and are developing primarily in streamlain alluvium with some slopewash colluvial material. Soil textures are primarily sandy loam or sandy clay loam. Coarse fragment content is generally less than 15% in the surface layer, and increases to about 20% or more in the subsoil and substratum. Stones and boulders are scattered on the soil surface. Brycan bouldery very fine sandy loam is the dominant soil within the alluvial bottomland, and is described below. Schupert gravelly very fine sandy loam occupies the narrow channel bottom of Rilda Creek within the study area, and was described in the previous survey for the fan installation project (Furst, 1991).

Schupert is a very deep, well drained, slowly permeable soil forming in streamlain alluvium. It is classified as a "Fine-loamy, mixed, superactive, calcareous, frigid Typic Ustifluvent." The most recent official NRCS soil series description for Schupert, dated March 2003, is on file.

Soils within the Alluvial Bottomland have been described and/or sampled at four locations (S1, S4, S7, and RC2). Evaluation of the field and laboratory data indicates the soil most closely correlates to the Brycan soil series.

Brycan bouldery very fine sandy loam is a very deep, well drained, moderately permeable soil with slow runoff forming primarily in streamlain alluvium. It is moderately to strongly calcareous. The surface layer meets criteria for a mollic epipedon. Brycan is classified as a "Fine-loamy, mixed, superactive, frigid Cumulic Haplustoll". The most recent official NRCS soil series description for Brycan, dated June 2000, is on file.

Sample site RC2 was located in the Proposed Spring Collection Study Area in the west extension of the study area. At typical sample site RC2, Brycan has a very dark grayish brown (10YR 3/2, dry) sandy loam surface layer about 6 inches thick. The subsoil is a brown (10YR 4/3, dry) sandy clay loam about 12 inches thick. The underlying "BC" transition layer is a brown (10YR 5/3, dry) sandy loam to a depth of about 30 inches. The "C" horizon substratum is a brown (10YR 5/3, dry) sandy loam to a sampled depth of 66 inches. Coarse fragment content ranges from about 10 to 20 percent throughout the soil profile. Scattered stones and boulders are on the soil surface. The Spring Collection Study Area was not developed as originally proposed.

Map Unit B: Steep Rocky Slopes; Haplustepts, Ustorthents

Map Unit B was mapped in the northwest corner of the west extension of the facility area and the canyon side slopes of the subsoil/construction storage area. The area west of the facilities will not be disturbed by mining. PacifiCorp had originally proposed storing and protecting topsoil in-place in the subsoil/construction fill storage area in Rominger Canyon. Soils within Unit B have been described and/or sampled at three locations (S5, S6, and RC6). Map

Unit B consists of steep to very steep, well drained, rocky slopes. Stones and boulders are commonly scattered on the surface. Sandstone rock outcrop is nearby. Vegetation is dominantly pinyon and juniper. Soil depth ranges from shallow to very deep in stony colluvium. Soils have little profile development, and are high in carbonates. The surface layer is less than 5 inches thick, and can be dark colored in certain areas. The subsoil and substratum layers are often very cobbly to very stony sandy loam to loam with 20 to 35% carbonates. This area is no longer proposed for disturbance.

Map Unit E: Colluvial Toeslopes; Bench

Map Unit E (Colluvial Toeslopes; Bench) is the dominant map unit on the current study area. It is the site for all of the mining and related facilities. Map Unit E occupies a gently sloping alluvial fan toeslope-bench situated between the Star Point Sandstone outcrop located near the base of the steep mountain sideslope and the alluvial bottomland of Rilda Creek to the south. As such, it is a south-facing slope with mixed, diverse vegetation including Ponderosa pine, Juniper, Douglas fir, some spruce, mountain mahogany, sagebrush, and mixed grasses. Elevation ranges from about 7,600 to 7,730' MSL. The map unit is considered to be in a "frigid" soil temperature regime, and an "ustic" soil moisture regime.

Three representative sites were fully described and sampled within Map Unit E (RC1, RC3, and RC4). All three sites were located midway across the unit, and indicated very deep, well drained soils. Results from seismic testing across this bench indicate an approximate depth of unconsolidated materials (soil above unweathered materials) of 5' on the north end nearby to the Star Point Sandstone outcrop, increasing to a total depth of 50 to 75' on the south end of the bench which ends just north of Rilda Creek alluvial bottomland. Three seismic lines were run across the bench, and the methods and results are contained in a separate report (AMEC Consultants, 2004).

Evaluation of the field and laboratory data for Map Unit E indicates that the soil most closely correlates to the Osote soil series. Osote is an established soil series of small extent mapped in south-central Utah. The most recent official NRCS soil series description for Osote, dated February 1999, is on file. Osote is a very deep, well drained, slowly permeable soil forming in colluvium and slopewash alluvium from sandstone and shale materials. Osote is slightly to strongly calcareous. The surface layer meets criteria for a mollic epipedon. Osote is classified as a "Fine-loamy, mixed, superactive, frigid Typic Calciustoll".

Based on a review of all three sample pedons (RC1, RC3, and RC4), Osote typically has a brown (10YR 4/3, dry) sandy loam to loam surface layer about 9 to 16 inches thick. The lower part of this layer is a "Bw" cambic horizon. The subsoil "Bk" calcic horizon is a brown to light yellowish brown (10YR 5/3 to 10YR 6/4, dry) strongly calcareous sandy loam, sandy clay loam, or loam to a depth of about 20 to 38 inches. The underlying "C" horizon substratum is a

yellowish brown to light yellowish brown (10YR 5/4 to 10YR 6/4, dry) sandy loam, sandy clay loam, or loam to a depth of 60 inches (5') on the north side of Map Unit E, and exceeding 84 inches (7') on the south side of the map unit. Slightly weathered, unconsolidated colluvial material extends to a depth of 50 to 75' on the south side of the unit (AMEC Consultants, 2004). For a full description of the map units, laboratory results, evaluation of soil suitablility and topsoil volume refer to Volume 11 Appendix Volume - Soils: Appendix B.

Map Unit F: Steep North Facing Slopes; Cryoborolls
One delineation of Map Unit F (Steep North Facing Slopes; Cryoborolls) was mapped on a north-facing slope above the south side of the Right Fork of Rilda Creek in the western extension area. This area will not be disturbed by mining activities. It was not sampled for laboratory analysis. Soils on this steep, north-facing slope are best classified as "loamy or loamy-skeletal, mixed, Typic Cryoborolls" with typical slopes of 25 to 60% or more. This map unit dominantly has Douglas Fir and spruce vegetation, with some aspen.

In a typical profile, Typic Cryoborolls have a stony to bouldery sandy loam to loam, dark-colored, surface layer ranging from 10 to 18 inches thick. The surface layer meets criteria for a mollic epipedon. The subsoil is a brown stony to very stony sandy loam or loam. Typic Cryoborolls are well drained.

Map Unit D: Disturbed Land Including Subcategories
Disturbed Land **-** The soils in this map unit have been disturbed by previously mining activities and road construction. They consist of mixed soil materials and waste coal. In the area that had been reclaimed below the Leroy Mine, three soils pits (S2, S3 and RC8) along with four geotechnical trenches (pits 7, 8, 10 and 11) revealed a layer of about one to two feet of cobby sandy loam soil over coal waste materials. The coal deposits are up to eight feet in depth (refer to Geotechnical Pit Photos in Volume 11 Appendix Volume: Soils - Appendix A). In addition to the area below the Leroy Mine, geotechnical trenches were excavated in the disturbed lands along Emery County Road #306 (pits 4, 6, and 9) and in the Rominger Mine area (pits 13 and 14).

Disturbed Land - DR: Old Mine Access Road **-** This unit designates the narrow access road leading to reclaimed Leroy Mine. This single track road cuts through Soil Unit B on a steep, rocky, south facing slope. The surface of the old road consists of gravely to stony soil materials derived mostly from sloughing and erosion of the cut slope and subsoil in the road base. Soil textures are mostly sandy loam with intrusions of loam. The materials in the upper 8 to 24 inches show good rooting potential. Underlying materials are very stony. Soils within this unit have been described and/or sampled at one location (S6). Geotechnical trenches were excavated along the access road; refer to Volume 11 Appendix Volume: Soils - Appendix A.

Disturbed Land - DF: Leroy Mine Site **-** This is a bench and cut slope at the location of the Leroy Mine portals. It includes a relatively flat area which has very little soil material over sandstone bedrock and a cut slope having poor quality soil materials. Soil sample, RIL1303, site S-5 was collected from the cutslope to characterize the soil materials at this location. A single geotechnical trench was excavated across the portal area (pit 1), refer to Volume 11 Appendix Volume: Soils - Appendix A.

Disturbed Land - RD: Emery County Road #306 **-** Map Unit RD consists of the present road corridor in Rilda Canyon. It was not evaluated as a soil map unit although there are suitable soil materials beneath the road.

In addition to the survey conducted related to the portal facility area, PacifiCorp consulted with Mr. Jim Nyenhuis in preparing a soil classification map for the soil storage sites located near the portal facilities area (refer to Volume 11 Appendix Volume - Soils: Appendix B). The topsoil storage site is located on a gentle alluvial/colluvial fan slope directly below the reclaimed Helco Mine portals on what was the coal storage area for the mine. This site was reclaimed in the late 70's by the lease holder and again by AML in 1988. The primary plant community in this area is disturbed Sagebrush/Grass community (refer to Volume 11 Appendix Volume - Biology: Appendix A for a complete description of the area). Approximately 60% of the area is mapped as Unit D (Disturbed Land; soil, coal, stones, fill material), with remaining area mapped as Unit A.

Note: In May 2019 all topsoil was removed from the topsoil storage area and placed on the reclaimed portal pad (final reclamation was completed in June 2019). Emery County, through funding by the Natural Resource Conservation Service (NRCS), has plans for constructing sediment control and diversion structures over the area of the 0.51 acre topsoil storage area (refer to Volume 11, Appendix Volume, Hydrology, Appendix E for plans and designs). These structures will protect the North Emery Water Users Special Services District (NEWUSSD) spring collection area from high sediment loaded storm water runoff generated as a result of the 2018 Trail Mountain Fire that burned the areas above the site. No salvaged soils will be used in this location and no vegetation will be planted. Therefore, success standards for vegetation will not apply.

The subsoil/construction fill storage site (~~no longer proposed for disturbance~~ never used as a storage site) is located in a narrow canyon used as access/coal storage for the reclaimed Rominger and Jeppson mines. Access to the canyon is directly from Emery County Road #306. The primary plant communities in this area is native, Douglas Fir/White Fir, Pinyon-Juniper/Curl Leaf Mountain Mahogany/Ponderosa Pine, Pinyon-Juniper/Curl Leaf Mountain Mahogany and Previously Disturbed AML (refer to Volume 11 Appendix Volume - Biology: Appendix A for a complete description of the area). Soil units mapped include; Disturbed - valley area and access road on the west side of the canyon, Colluvial toeslopes - collouvial fan (Unit E) located of the west side of the canyon and steep rocky slopes; haplustepts, ustorthents (Unit B) - steep slopes located on the east and west side of the canyon reclamation project

(refer to Volume 11 Appendix Volume - Soils: Appendix A and B for soil descriptions of the site).

The following table list the acerage of each soil unit within the extent of the Rilda Portal Facility disturbance:

SOIL MAP UNIT	ACREAGE WITHIN STUDY AREA (acres)
Map Unit A: Alluvium Bottomland Soils	0.41
Map Unit B: Steep Rocky Slopes, Haplustepts, Ustorthents	1.29
Map Unit D: Previously Disturbed Area, Reclaimed by AML	3.53
Map Unit E: Colluvial Toeslopes, Bench	6.96
Map Unit RD: Rilda Canyon Road	0.91
	Total 13.1

R645-301-222.400 **Potential Productivity of Soils**

Present and potential productivity of the existing soils was conducted by the Natural Resources Conservation Service and is presented in Volume 11 Appendix Volume - Biology: Appendix B.

R645-301-223 Soil Characterization

The results of the Order 1 Soil Surveys are presented in Volume 11 Appendix Volume - Soils: Appendix A & B. Each distinct soil is presented as a soil map unit with accompanying description, laboratory analyses, and spatial extent clearly defined. Excavation test pits used to conduct the detailed examination, description and sampling of each mapping unit are also displayed on Map 200-1.

R645-301-230 OPERATION PLAN

The following sections describe the methods for the removal and storage of topsoil and subsoil/construction fill from the Rilda Canyon portal facilities. The construction sequence covers approximately 6.8 acres that required the removal of topsoil. Subsoil within this area was utilized in the construction of the facilities pad and therefore, no subsoil was stored. The location of the topsoil storage area is found on 200-1 and 200-2 in Volume 11 Appendix Volume- Soils: Appendix C.

R645-301-231 General Requirements

R645-301-231.100 Methods for Removing and Storing Topsoil, Subsoil

All areas disturbed at any time during the construction of the mine and its surface facilities had all available topsoil (i.e. plant growth medium) separately removed and segregated from other colluvial material. The topsoil was stockpiled in the topsoil storage area for use during reclamation (refer to Map 200-1, 200-2 and Engineering Section Maps 500-3 and 500-4 sheet 3 of 4). Based on the survey conducted by Mr. Jim Nyenhuis (refer to Volume 11 Appendix Volume - Soils: Appendix B) both the A and portions of the B horizon were suitable for removal. Approximately twenty-four inches of topsoil materials was salvaged from all areas. One exception includes the sediment pond area which was previously disturbed by historic coal mining and later reclaimed by AML. Soil removal activities from the AML area during the pond construction sequence found that the material contained a high quantity of coal. Most of the material was hauled to the Deer Creek waste rock site for disposal. Quality coal was transported to the Huntington Power Plant. Material not containing coal (approximately 2,137 yards^3) was field checked for pH, EC, color and texture. This material was segregated and stored as recommended by the Division's soil scientist monitoring the soil removal process. The material was separated from the existing topsoil material by a colorful fabric and stored as a substitute topsoil.

Soil and geophysical surveys conducted at the mine facility and sediment pond area~~s~~ revealed that the colluvial soil material extends to a depth greater than projected cuts to develop the post construction topography. Based on this analysis, cut material in excess of the upper twenty-four inches of the topsoil was utilized as fill within the constructed mine pad for the Rilda Portal Facility.

All soils were removed with one or more of the following types of equipment: bulldozer, scraper, front-end loader, and/or track-hoe. A qualified soil scientist provided on-site consultation during the topsoil removal process to maximize removal of quality topsoil and minimize inclusion and dilution.

Topsoil and substitute topsoil materials were stockpiled at a separate location approximately 0.5 miles down canyon from the mine site. This location ~~will~~ allows the soil materials to be properly managed and minimize the potential for impacts from the active mining operation.

The historical topsoil storage site ~~is~~ was located away from the main Rilda Canyon drainage in a fairly flat, previously disturbed area. ~~Topsoil is stored within the area~~ The historical storage site is outlined on Maps 200-1 and 200-2 and ~~contains~~ contained approximately 4,285 cubic yards of topsoil excavated as part of the facility pad construction activities; and 2,137 cubic yards of substitute topsoil excavated and salvaged from the sediment pond area. As mentioned above, the soil materials ~~are~~ were separated by a colored marker fabric to distinguish between the two types of topsoils.

Location of the topsoil storage pile ~~minimizes~~ minimized the disturbance by utilizing previously disturbed areas associated with the Helco Mine. During the operations of the Helco Mine, this area was used as coal storage and handling area. Water monitoring well (P4, plugged and reclaimed in October 2018, refer to map 500-3 in the Engineering Section) installed near the pile indicates that the depth of the saturated alluvium is approximately twenty feet below the existing ground surface. As discussed above, this area was used as a coal storage and handling site. All topsoil or substitute topsoil salvaged from the construction sequences ~~has been~~ was stored at this location.

To prevent additional compaction of the existing soils, the pile was constructed over a broad area with track mounted equipment. End dump trucks hauled the soil from facility area to the soil storage site. Trucks did not travel on the storage site, but dumped loads adjacent to Forest Development Road 024. Track mounted equipment distributed the soil across the site Topsoil storage slopes, as constructed; ~~do~~ did not exceed 2:1. The pile was graded, pocked, seeded and hydromulched to establish a vegetative growth for sediment and erosion control.

Temporary sediment control ~~has been~~ was installed around the perimeter of the pile~~s~~ to divert runoff around the pile and reduce erosion due to runoff from the surrounding area. The temporary sediment control ~~will~~ also served to prevent the loss of soil from the site. The roughened surface of the stockpile~~s~~ ~~will~~ prevented rapid runoff and helped to control erosion until vegetation ~~becomes~~ became reestablished.

The stockpile seeding was conducted during the fall period with the sagebrush/grass seed mix outlined R645-300 Biology Section Table 300-8. The established vegetative cover ~~will~~ protected the soil from wind and water erosion. ~~If~~ No supplemental seeding ~~is~~ was needed~~, it will be completed as necessary~~. Sideslopes ~~will be~~ were monitored for erosion ~~as well and will be repaired if erosion appears to be excessive~~ but never required repair. A fence ~~has been~~ was constructed around the perimeter of the pile to protect it from grazing impacts.

A boulder storage area ~~is~~ was located east the facilities. This area was needed to store large boulders encountered during facility pad construction activities. Stored boulders ~~will be~~ were used during final reclamation for development of riprap and/or placed on the final reclaimed slopes to blend in with surrounding terrain.

2017 Pipeline Corridor

Disrupted earth material (mixture of native soils, imported borrow) for the construction of the post-mine water drainage system between the 1st Right portal facilities and the Huntington Plant raw water pond ~~will be~~ were excavated using a track-hoe or similar equipment to a depth as outlined in the design drawings in the Volume 11A Appendix Volume, Engineering, Appendix H. Disrupted earth materials ~~will be~~ were temporarily stored adjacent to the excavated trench. No topsoil ~~is~~ was available for segregation. The pipeline ~~will be~~ was installed and bedded in imported bedding material. Once the bedding material ~~is~~ was compacted the excavated material ~~will be~~ was screened using a screening attachment for a track-hoe back into the trench. The trench ~~will be~~ was backfilled in 1 foot lifts and compacted to a 96% proctor. The screen attachment sizes the granular fill to the design specification for fill requirements of the trench. Minimal earth material ~~will be~~ was stockpiled on the surface overnight since the county and state road departments require the trench to be filled at the end of each work day.

Any oversized material that ~~is~~ was removed by the screening process ~~shall be~~ was hauled to the Neilson's Huntington Canyon gravel pit for disposal and use. This material ~~will be~~ was removed on a daily basis.

There ~~are~~ were three (3) locations ~~planned for~~ that required directional drilling operations. These operations are performed so that the integrity of the road is not compromised or traffic flow is not impacted. The operation ~~will~~ used a "wet" drilling process to clear fines from the cutting bit. The fines from the directional drill hole ~~will be~~ was routed into the trench. Water used ~~will be culinary or~~ agricultural use water and ~~will~~ saturated the soil horizons below the trench. Fines from the cuttings ~~will be~~ was utilized as fill in the trench. No drilling muds ~~will be~~ were needed ~~use~~ in this operation.

Two laydown or staging areas are identified on the Soils Map in Volume 11A Appendix Volume, Soils: Appendix D. ~~If used by the contractor,~~ The areas ~~will be~~ were only used only during the construction phase. No topsoil ~~will be~~ was removed from the sites and only minor disturbance ~~will~~ occurred (i.e. for stormwater runoff control). Once the construction ~~is~~ was completed, stormwater controls ~~will be~~ were removed and the laydown area ~~will be~~ was roughened to loosen the soil surface and seeded.

R645-301-231.200 Demonstration of Suitability

Analyses from the soil samples taken in the disturbed area are listed in Volume 11 Appendix Volume - Soils: Appendix A and B. The suitability of this material for reclamation is discussed in Appendix A and B. Material proposed as a supplement to topsoil has also been tested and mapped. The suitability of this material for vegetative growth has been demonstrated through past reclamation activities in Rilda Canyon (AML reclaimed mines: Helco, Leroy and Rominger/Jeppson). Approximately 10.7 acres has been disturbed during past mining activities, refer to Engineering Section Map 500-1. Approximately 1.79 acres of the Rilda Canyon Portal Facilites (including soil storage area~~s~~) has been previously disturbed by coal mining activities. Vegetation has re-

established successfully on the previously disturbed areas even in areas without the benefit of topsoil replacement, reseeding or supplemental irrigation.

During past coal mining activities, cuts and fills were made on both north and south facing sides of the canyon. Areas were leveled for staging areas, coal seam exposures, coal handling and drilling pads. The cuts were left in place. In several areas, no reclamation was conducted on the disturbed lands. Natural vegetation has ~~moved in and~~ become established on the previously disturbed areas even without the replacement of topsoil materials and seeding.

R645-301-231.300 Test Plan for Evaluating the Results of Topsoil Handling and Reclamation Procedures

At the time of final reclamation and after the subsoil material has been regraded, the soil material will be sampled on 500 foot intervals to a depth of 48 inches. A soil auger will be used to collect samples by 1.0 foot increments. A field instrument will be used to sample the regraded material for pH and EC parameters. Field sampling will allow immediate identification of salinity, acidity or sodicity problems. Should problem areas be located, sampling will be intensified to a 100 foot square grid described below. Four augered holes will be randomly placed in the regraded area of the mine facility. The randomly selected sites will be sampled along the survey baseline established for the mine facility area. The subsoil material will be sampled at 1.0 foot intervals. Samples will be sent to a certified laboratory to be analyzed for the parameters outlined in Table 6 of the Utah *"Guidelines for Topsoil and Overburden Handling*". If any potential problems are identified, additional sampling will be conducted in the vicinity of the suspect sample to better define the extent of the area affected. Should a problem be identified, the area would be resampled on a grid of 100 foot centers to define the nature and extent of the problem. The problem area would then be evaluated in consultation with the Division with the most appropriate remedial action implemented.

If testing finds the field parameters are within an acceptable range, redistribution of the topsoil will then be initiated. Topsoil will be sampled as it is hauled from the storage pile for comparison to the baseline data. Amendments would be added to the regraded areas at rates based on their comparison to the baseline soil data. Fertilizer would be added as needed by using a spreader then mixing the fertilizer into the soil, along the contour.

R645-301-231.400 Construction and Maintenance of Topsoil Handling and Storage

Construction of the topsoil storage site began by removing all large, existing vegetation and installing sediment control structures to channel natural undisturbed drainage away from the stockpile location. Existing soil from the storage area was not removed. A colored marker fabric, 1.0 foot in width, was installed on 10.0 foot centers to identify the predisturbed surface. Topsoil was hauled from the mine facility and sediment pond areas with end dump trucks to develop the storage pile. The topsoil will remain in place until final reclamation occurs. A field fence was constructed surrounding the topsoil pile to protect it from grazing impacts. Maintenance of the topsoil pile throughout the life of the mining operation will consist of; 1) seeding new material added to the stockpile, 2)

reseeding where erosion or other elements have caused a loss of vegetation, and 3) maintenance of the sediment control structures.

R645-301-232 Topsoil and Subsoil Removal

Prior to the removal of the topsoil, all trees and brush were cleared and removed from the site. Soil was stripped to various depths up to 2.0 feet depending on soil type and/or topsoil depth. Where thick deposits of topsoil or material from reclaimed AML sites were found, soil material was removed as much as possible. The coal waste was removed from the area and disposed of at the existing Deer Creek waste rock site or utilized in the generation of electrical power. The topsoil storage area is illustrated on Maps 200-1, 200-2, Engineering Section 500-3 and 500-4 sheets 3 of 5 and 4 of 5.

Prior to any surface disturbance of the portal area soil test pits were dug. Soil test pits/trenches were established in the disturbed areas (refer to refer to Volume 11 Appendix Volume - Soils: Appendix A and B). These areas included the pinon/juniper habitat areas, riparian habitat areas, sage/brush grass, mountain brush habitat areas, and AML reclaimed sites. Refer to Map 200-1 for test pit/trench site locations. Samples were taken at various depth intervals and analyzed according to the *Guidelines for Management of Topsoil and Overburden for Underground and Surface Coal Mining* (Leatherwood and Duce, 1988). Analyses of these pre-construction samples are found in Volume 11 Appendix Volume - Soils: Appendix A and B.

As documented during the soil survey (refer to Volume 11 Appendix Volume - Soils: Appendix A) and geotechnical investigation (refer to Volume 11 Appendix Volume - Engineering: Appendix F - 2004 AMEC/LGS Geophysics) an area of buried coal was encountered covering approximately 0.7 acres with an average thickness of 4.0 feet. The buried coal is located directly below the reclaimed Leroy Mine portals. During development of the drainage control and sediment pond, the buried coal was removed and transported either to the Deer Creek Waste Rock Storage Site or utilized for power generation if coal quality allowed (refer to Volume 11 Appendix Volume - Soils: Appendix A for analysis of the coal waste material). A portion of the buried coal was located outside the disturbed area as shown of Map 200-2. Energy West cooperated when AML enhanced this area during site development.

Within the disturbed areas of the Rilda Portal Facility and sediment pond approximately 6,422 cubic yards of suitable topsoil material was recovered and stockpiled during construction activities. The upper 24 inches of recommended topsoil salvage included portions of the A and B horizons (refer to Volume 11 Appendix Volume – Soils: Appendix A & B).

TOPSOIL SALVAGE VOLUME
Note: All stored topsoil has been used for final reclamation (3).

SOIL SALVAGE AREA	*Acres*	*Salvage Depth* (inches)*	*Estimated Volume (cubic yards*	*Actual Volume (cubic yards)*
Mine Facility: North of Emery County Road #306	2.7	24 (1)	8,712	2,875
Mine Facility: South of Emery County Road #306	1.3	24 (1)	4,195	1,410
SUBSTITUTE TOPSOIL SALVAGE VOLUME Note: All stored substitute topsoil has been used for final reclamation (3).				
Sediment Pond Area	1.3	Depth not applicable. Soil mixed from previous reclamation. Only clean and tested soil was salvaged.	N/A	2,137(2)

(1) Based on recommendations from the Order 1 survey conducted by Mr. Jim Nyenhuis (refer to Volume 11 Appendix Volume - Soils: Appendix B)
(2) Sediment Pond Area: Soil salvaged from this area was used to enhance the previously AML reclaimed area, excess soil material was segregated and stored as recommended by the qualified soil scientist monitoring the soil removal process. Disturbed soil with coal in the profile will not be salvaged. Coal waste encountered during soil salvaging and construction of the sediment pond was segregated separately and transported to the Deer Creek Waste Rock Site for disposal or utilized for power generation if coal quality allows.
*Actual volumes of recovered topsoil were only approximately 33% of the estimated volumes. This was mainly due to the many large boulders encountered during the stripping sequence. Other factors affecting volume included depth to bedrock, color, and texture.
(3) Mass balance cut/fill estimates were unable to be completed for post reclamation. The topography base map created prior to construction of the facility is different than the topography base map created prior to reclamation resulting in dissimilar contour lines. MapCon Inc. was used for the construction of the facilities, and Aerographics Inc. was used prior to reclamation, thus presenting two separate and dissimilar base maps.

R645-301-232.500 Subsoil Segregation

As mentioned above, no subsoils were segregated or stored. After topsoils were removed, subsoils were utilized as fill material for the construction of the facility pad.

R645-301-232.600 Timing

To alleviate ventilation concerns at the Deer Creek Mine, the Bureau of Land Management (BLM) during a telephone conference on August 23rd /October 27th, 2005, recommended that Energy West (now Interwest Mining Company) submit an R_2P_2 request to allow the continuation of the Rilda Canyon fan portal/intake entry rock slope development to intercept the outcrop in Rilda Canyon. Approving the development of the portals from within the mine to the surface is consistent with the stipulations outlined in the Federal Lease U-06039 (Special Stipulation #14). In an email received by the BLM (August, 2005), the Manti LaSal Forest Supervisor agreed to allow Energy West (now Interwest Mining Company) to develop the fan portal breakout as long as no equipment was used on the surface and the public is protected from potential harm. No permanent structures were constructed until Energy West (now Interwest Mining Company) received approval from the Assistant Secretary of Land and Minerals at the Department of Interior. During the August, 2005 phone conference, OSM personnel indicated the proposed action is not considered mine plan modification.

On October 27th, 2005, Energy West (now Interwest Mining Company) participated a phone conference with BLS, USFS, OSM, and DOGM to discuss the potential of developing an intake entry immediately east of the fan portal. This additional entry was needed for additional ventilation to the Mill Fork Lease (ML48258) mine workings. All in attendance agreed that the intake entry portal should be developed identically to the fan portal development (i.e. no equipment was used on the surface and the public is protected from potential harm, no permanent structures constructed until Energy West (now Interwest Mining Company) receives approval from the Assistant Secretary of Land and Minerals at the Department of Interior). In an email received by the BLM (October, 2005), the Manti LaSal Forest Supervisor agreed to allow Energy West (now Interwest Mining Company) to develop the intake entry portal breakout.

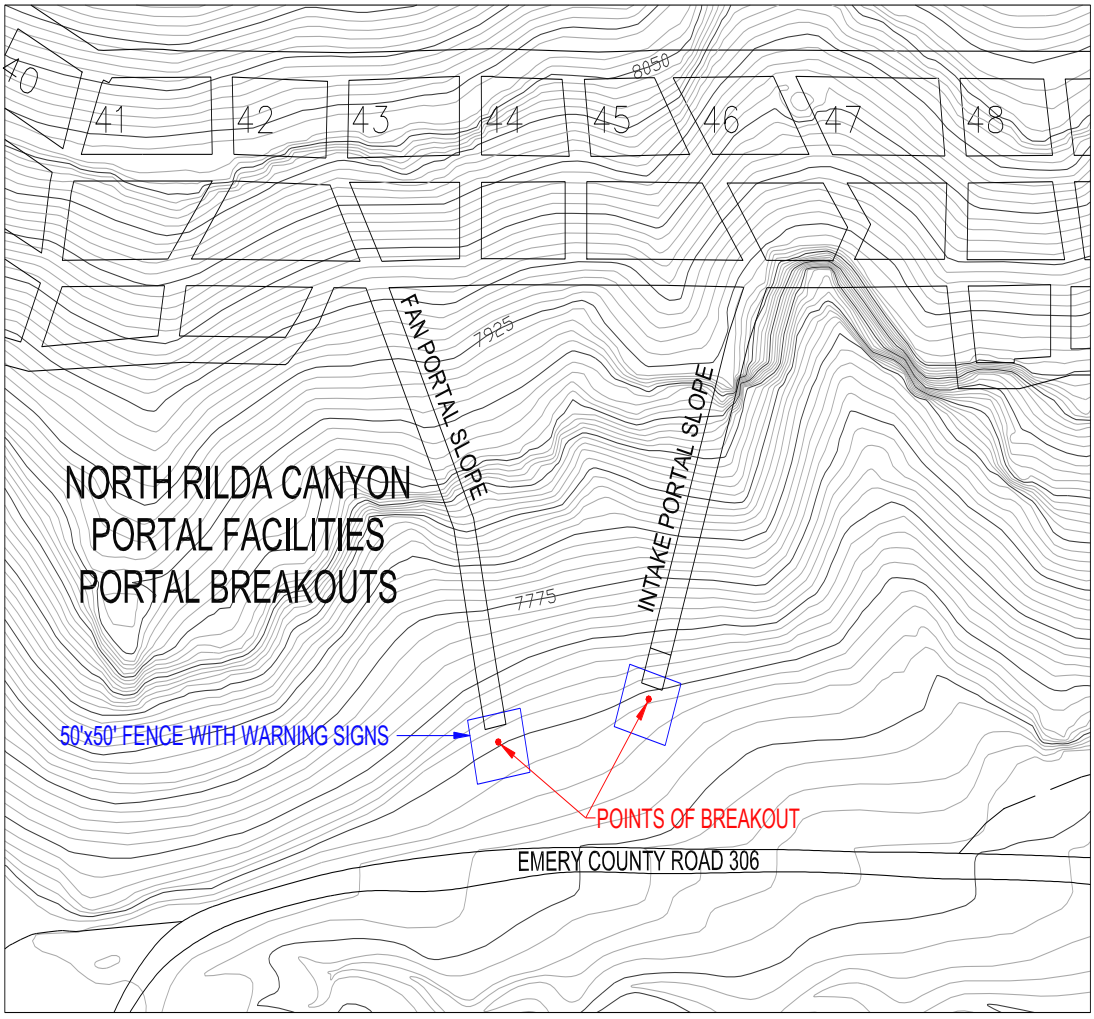

R645-301-200 Figure 1: North Rilda Canyon Portal Facilities - Points of Breakout

The area affected by the portal developments, two areas approximately 30x40 feet (0.056 acres, refer to R645-301-200: Figure 1). As outlined in the BLM R_2P_2 request, Energy West followed the outlined steps:

1. All rock slope development will be from within the mine to the outcrop of the Star Point Sandstone.
2. Colluvial material encountered at the outcrop interface will be stored within the mine.
3. During the final breakout process, mine personnel will be stationed at the outcrop to warn/prevent unwarranted access and to monitor the area for any unsafe condition(s).
4. If any rocks are dislodged as a result of the portal development which impact public safety, Energy West will immediately rectify the situation.
5. Warning signs will be installed along Emery County Road #306 warn the public of the portal development process.
6. A temporary fence will be erected around the breakout area to prevent unwarranted access. Fencing materials used will be non-shiny material and/or of dark color.
7. Silt fence will be erected downslope of the portal breakouts to prevent additional contribution of suspended solids to the receiving stream.
8. Warning signs will be installed along the exterior of the fence, including; NO SMOKING, NO UNAUTHORIZED PERSONNEL BEYOND THIS POINT, DANGER.
9. No equipment will be used on the surface except for hand tools to remove material to prevent unsafe conditions.
10. All slopes, ribs or faces of the opening or unstable areas in the surrounding area will be scaled, secured and supported before completion.
11. The exiting brow of the mine openings will be secured and the exit of the mine openings will be posted off with timber and fencing upon completion of the mine development.
12. No permanent structures will be constructed until Energy West receives approval from the Assistant Secretary of Land and Minerals at the Department of Interior.

Development of the fan/intake entry portals from within the mine is consistent with the engineering plans outlined in the permit. Exception to the plan is soil stripping prior to development of the portals. As discussed earlier, development of the fan/intake entry portals from within the mine involved two areas approximately 30 x 40 feet, or 0.056 acres. During development of the fan/intake entry portals, all materials extracted were stored within the mine. The exact location of the Star Point Sandstone and colluvial interface was unknown; thereby estimating the subsoil quantity was not possible. Energy West (now Interwest Mining Company) took all precautions necessary to minimize disruption to the surface topography. The amount of topsoil stored within the mine, assuming a two foot salvage depth, is approximately178 yards^3. At the start of construction Energy West (now Interwest Mining Company) removed the extracted soil material temporarily stored in the mine and utilized it in construction of the facility pad.

R645-301-233 Topsoil Substitutes and Supplements

Inspections of the disturbed areas of Rilda Canyon related to the historic coal mining activities have shown that the regraded colluvial materials have provided a suitable growth medium for sustaining native vegetation on previously disturbed surfaces. Even without replacement of the topsoil material, existing revegetation at the sites indicate that excavated, regraded materials are capable of successfully supporting vegetation that existed prior to disturbance with minimal surface preparation. The revegetation has occurred without the addition of mulch, seed, nutrients or supplements and without the installation of erosion protection. Based on the soil surveys conducted for the Rilda Canyon Portal Facilities, substitute topsoil will not be required for final reclamation of the mine site.

Note: During excavation of the sediment pond as part of the facilities pad construction activities, some soil materials (approximately 2,137 yards^3) were salvaged and stored in the topsoil storage area. Field sampling of the material for pH and EC revealed that the material is suitable for use in the growth medium. This soil material ~~has been~~ was separated from the existing native topsoil using a colored fabric marker to distinguish between the two stored piles.

R645-301-234 Topsoil Storage

As required under R645-301-234, permanent stockpiles of topsoil for use during final reclamation was placed on a stable surface within the permit area where it ~~will~~ was not be subject to significant disturbance, wind erosion, or compaction during life of mine. The stockpile location ~~is~~ was considered an ASCA area where BTCA techniques ~~have been~~ were used for the treatment of runoff water from the area. Refer to R645-301-700 for details concerning ASCA areas. The historic stockpile location is presented on Maps 200-1, 200-2; Engineering Section Maps 500-3, 500-4 sheets 3 of 4. The topsoil storage pile site ~~occupies~~ occupied approximately 0.51 acres. Stockpile slopes ~~have been~~ were built not to exceed 2:1. Slopes ~~are~~ were irregular, pocked, mulched, and seeded to help retain precipitation. Temporary sediment control devices ~~are~~ were utilized to minimize runoff and retain soil and moisture on the site.

Revegetation of the topsoil storage pile was with an effective cover of sagebrush/grass (refer to R645-301-300: Biology Table 300-8 for seed mix). The stockpile will was not be disturbed prior to final topsoil redistribution without prior approval by the Division. According to Neinhaus, 2004, the quality of the subsoil (below 2 feet depth) ~~varies~~ varied little from the top 2 feet of material.

R645-301-240 RECLAMATION PLAN

As mining activities at the Deer Creek Mine ceases ceased (January 2015) and the utilization of the surface facilities ~~is~~ no longer needed, land reclamation processes ~~will~~ commenced. Reclamation of all disturbed areas ~~will~~ followed the requirements of R645-301. The Soils Reclamation plan for the Rilda Canyon Portal Facilities is detailed below. There ~~will be~~ was no reclamation of the installed post-mine gravity drainage system. This system ~~will be~~ was installed for permanent use. ~~However,T~~he temporary use areas (laydown areas) used during construction ~~will be~~ were roughened and seeded (as required by the SWPPP) immediately after construction ~~is~~ was completed ~~or the contractor no longer requires a use for those areas~~.

Note: In May 2019 all topsoil was removed from the topsoil storage area and placed on the reclaimed portal pad (final reclamation was completed in June 2019). Emery County, through funding by the Natural Resource Conservation Service (NRCS), has plans for constructing sediment control and diversion structures over the area of the 0.51 acre topsoil storage area (refer to Volume 11, Appendix B, Hydrology, Appendix E for plan and design). These structures will protect the North Emery Water Users Special Services District (NEWUSSD) spring collection area from high sediment loaded storm water runoff generated as a result of the 2018 Trail Mountain Fire that burned the areas above the site. Therefore, the soils will not be utilized in this location and success standards for vegetation will not apply.

R645-301-242 Soil Redistribution

At the time of reclamation of the Rilda Canyon Portal Facilities, PacifiCorp ~~will~~ reduced the footprint of the Portal Facility Area disturbed area by redistributing soil material to be consistent with the postmining land use of the area. The only exception was the topsoil storage area in which Emery County is planning and constructing sediment control and diversion structures over the entire 0.51 acre site. ~~This will be~~ Redistribution over the mine pad area was accomplished by cutting and/or filling the areas disturbed by mining activities. ~~Prior to initiating regrading process at the facility area, the entire area will be ripped with a dozer to a depth of approximately two feet to reduce soil compaction.~~

Existing soils used to construct the facility pad ~~will be~~ was distributed to form the land to the proposed post-mining grade. Topsoil materials that were previously stockpiled ~~will be~~ were redistributed in a uniform thickness on the ~~scarified,~~ postmining regraded subsoil surface. Track-mounted equipment ~~will be~~ was used to recontour the disturbed area. Refer to R645-301-500: Engineering, where a detailed plan for recontouring the area is presented. Travel over redistributed soil material ~~will be~~ was minimized to the extent possible. This ~~will be~~ was accomplished by reclaiming the mine in specific sequences, utilizing existing roads and travelways to live haul soil material. It is important to understand that while reclamation ~~will be~~ was specifically sequenced, various stages ~~will be~~ were occurring simultaneously throughout the site. ~~The regraded surface will be staked to indicate the depth of topsoil to be applied.~~ After the topsoil ~~has been~~ was spread and leveled, it ~~will be~~ was pocked/scarified

along contour, unless prohibited by slope configuration or grade. ~~At this time other~~ Additives ~~would~~ were incorporated into the soil ~~if deemed necessary by soil sampling~~ at the required rate. Seeding and mulching ~~will be~~ was completed soon after redistribution of the topsoil to minimize wind and water erosion.

The sediment pond area, approximately 1.3 acres, ~~will be~~ was regraded and covered with available soil salvaged from this area. As discussed in above, there ~~is~~ was approximately 2,137 cubic yards of excess soil material for reclamation. ~~If additional soil is available, it will be used to create mounds, extrusions, etc. to provide a natural aesthetic appearance to the reclaimed slopes.~~

~~The topsoil storage sites will be reclaimed by first removing the colored indicator fabric. The area will then be slightly roughened being careful not to expose buried coal from past mining activities. Boulders will be randomly placed on the surface similar to pre-existing conditions, estimated at approximately five percent coverage. Revegetation of the topsoil storage piles will be with an effective vegetative cover (refer to R645-301-300: Biology Tables 300-7 and 300-8 for seed mixtures). A hydromulch/tackfier will be sprayed on all disturbed areas of the site.~~

Two soil sample sites are identified on the map in Volume 11, Appendix Volume A, Soils, Appendix E. The sites were chosen to evaluate the overall quality of the soils for final reclamation and identify any suitability issues for plant growth. In each site, a sample was taken of the top 12 inch depth of topsoil. The subsoil was also sampled at 12 inch intervals to a depth of 4 feet. Therefore, 5 samples were collected and analyzed for each location. The results of the analyses are shown in Volume 11, Appendix Volume A, Soils, Appendix E.

R645-301-243 Soil Nutrients and Amendments

~~Nutrients and soil amendments will be applied to the redistributed material when deemed necessary by assessment of the laboratory analyses. Laboratory analyses for the redistributed topsoil will be compared to soil samples collected from the baseline studies. Nutrients and amendments will be added, to make the redistributed soil similar to the undisturbed soils and aid in establishment of the vegetative cover. The nutrients can be added hydraulically, by broadcasting, or by drilling. If the nutrients and amendments are broadcast to the ground surface they will be intermixed with the soil during placement.~~

~~The topsoil will be sampled as it is being put in place as described in R645-301-231.300. Random grab samples will be collected from the regraded surface during redistribution of the topsoil. Three composite samples will be collected for each of the areas to be topsoiled: mine facility and sediment pond areas. Soil nutrients and amendments will be added as dictated by the results of the tests in comparison with baseline sampling results.~~

Nutrients and soil fertilizers was applied at the completion of the pocking process. The fertilizer was applied by mixing with the hydromulch and sprayed uniformly over a readied reclaimed area. As outlined in R645-301-300: Biology, fertilizer was applied at the following

rate:

Premium Garden Fertilizer (16-16-8)	40 lbs/acre
Urea (46-0-0)	50 lbs/acre

R645-301-244 Soil Stabilization

Various sized rocks and boulders (litter) ~~will be~~ were randomly placed on slopes of reclaimed areas to control slope slippage, promote microhabitats, and provide a natural aesthetic appearance. Where it is deemed necessary, especially on slopes greater than 20%, a soil tackifier (refer to R645-301-300: Biology, Seeding Techniques) ~~will be~~ was incorporated into the reclamation process to stabilize soil material (refer to R645-301-300: Biology for application rates).

Rills and gullies, which develop in areas that have been regraded and topsoiled and which either; 1) disrupts the approved postmining land use or the reestablishment of the vegetative cover, or 2) causes or contributes to the violation of water quality standards for receiving streams will be filled, regraded, or otherwise stabilized.

R645-301-250 PERFORMANCE STANDARDS

All topsoil and subsoil will be removed, maintained and redistributed according to the plan given under R645-301-230 and R645-301-240.

All stockpiled topsoil and subsoil will be located, maintained and redistributed according to plans given under R645-301-230 and R645-301-240.

PacifiCorp

Deer Creek Mine

C/015/0018

Volume 11 North Rilda Portal Facilities

Volume 11 – Biology

Revise Entire Section

R645-301-300 BIOLOGY SECTION

TABLE OF CONTENTS

R645-301-310 INTRODUCTION....1

R645-301-320 ENVIRONMENTAL DESCRIPTIONS....1

R645-301-321 VEGETATION INFORMATION....1
I. Aquatic Species....10
II. Terrestrial Species....12
R645-301-322.210 Threatened and Endangered Species....12
R645-301-323 MAPS AND AERIAL PHOTOGRAPHS....17

R645-301-330 OPERATION PLAN....17

Protection and Enhancement:....17
Wildlife Mitigation Commitments:....19

R645-301-340 RECLAMATION PLAN....25

R645-301-341 REVEGETATION....25
Seeding Techniques....30
R645-301-342 FISH AND WILDLIFE....30

R645-301-350 PERFORMANCE STANDARDS....31

REFERENCES:....33

MAPS

300-1 Vegetation Map
300-2 Vegetation Reference Areas
300-3 Mule Deer Habitat
300-4 Elk Habitat
300-5 Moose Habitat

FIGURES

300-1 Mexican Spotted Owl Nesting and Foraging Areas 14

TABLES

Table 300-1: Emery County, Utah Threatened and Endangered Species (Wildlife and Fish) 4
Table 300-2: Sensitive Species (Utah Conservation Data Center and Manti-LaSal Forest) 6
Table 300-3: Other Wildlife Species of Consideration 8
Table 300-4: Migratory Birds 9
Table 300-5: Rilda Canyon Wildlife Mitigation 19
Table 300-6: Rilda Canyon Portal Facilities Reclamation Schedule: Initial Reclamation for mine facilities 26
Table 300-7: Rilda Canyon Portal Facilities Reclamation Schedule: 1st thru 10th Year 27
Table 300-8: Seed Mixture (Pinyon-Juniper/Mountain Brush) 28
Table 300-9: Seed Mixture (Sagebrush/Grass) 29
Table 300-10: Seed Mixture (White Fir/Aspen) 30

APPENDICES (Refer to Volume 11 Appendix Volume - Biology)

Appendix A. NORTH RILDA CANYON PORTAL FACILITIES AREA VEGETATION SURVEY, 2004, MT. NEBO SCIENTIFIC, INC.

Appendix B. VEGETATION PRODUCTIVITY ESTIMATES LETTER, 10/26/04,NATURAL RESOURCES CONSERVATION SERVICE.

Appendix C. COUNTY LISTS OF UTAH'S FEDERALLY LISTED THREATENED, ENDANGERED AND CANDIDATE SPECIES, 5/21/04, UTAH DIVISION OF WILDLIFE RESOURCES.

Appendix D. PRELIMINARY REPORT ON SURVEYS CONDUCTED TO DETERMINE POTENTIAL IMPACTS OF RILDA SURFACE FACILITY DEVELOPMENT IN RILDA CANYON DURING 2004, JULY 2004, BY THE UTAH DEPARTMENT OF NATURAL RESOURCES.

FISH AND MACROINVERTEBRATE SURVEY AT RILDA CREEK, EMERY, UTAH, FALL 2004, PRELIMINARY REPORT, CIRRUS ECOLOGICAL SOLUTIONS, L.C., NOVEMBER 4, 2004.

Appendix E. 2004 VENTILATION FAN SOUND SURVEY.

Appendix F. HABITAT SUITABILITY DETERMINATION REPORT, 10/5/04, EIS ENVIRONMENTAL & ENGINEERING CONSULTING.

Appendix G. AN EVALUATION OF BAT HABITAT: RILDA CANYON, EMERY COUNTY, UTAH, JOEL M. AND GABRIELLE F. DIAMOND, OCTOBER 2004.

Appendix H. GUIDELINES FOR MANAGING BIRDS ON POWERLINES, PACIFICORP, EFFECTIVE DATE: 2/15/99.

R645-301-310 INTRODUCTION

A portion of the following vegetative, fish, and wildlife resource information has been taken from the Data Adequacy document (Data Adequacy L.B.A No. 11, December 1996) and the Environmental Assessment (Mill Fork Federal Coal Lease Tract UTU-71307, Environmental Assessment document, Lease By Application, No. 11) reported by the Manti LaSal National Forest in June, 1997.

R645-301-320 ENVIRONMENTAL DESCRIPTIONS

The following sections of this application contain descriptions, information, and plans to protect the biological, aquatic, and wildlife resources within and in the vicinity of Rilda Canyon.

R645-301-321 Vegetation Information

The North Rilda area is located within an east-west trending canyon that is very steep and narrow with rounded narrow ridge tops. Contour elevations range from approximately 7,400 feet to over 9,600 feet. Vegetative cover and species composition within this elevation range is very diversified. Ecosystems within this portion of East Mountain contain various habitats that are mostly influenced by the steep and broken slopes and their orientations. Distinguishable plant communities within the area are: Pinyon/Juniper, Mountain Brush, Mixed Conifer (upper elevations), Sagebrush/Grass and Riparian. A very narrow band of Riparian community is considered to follow along the stream to the Rilda Canyon Springs. Refer to Map 300-1 of this section for the diverse vegetative communities. Note that Map 300-1 is a vast area map. For more vegetative community details related to the Rilda Canyon Portal Facilities refer to Volume 11 Appendix Volume - Biology: Appendix A.

Vegetation studies have been conducted within the Deer Creek Mine permit area. The vegetation mapping that was previously conducted for the mine area includes the North Rilda Area, (formerly called the "Future Permit Area" [Volume 4, Map 2-14]). Vegetation studies were conducted for the North Rilda permit area by Mt. Nebo Scientific, 2003 and 2004 (refer to Volume 11 Appendix Volume - Biology: Appendix A), and J.R. Barker in 1982 (refer to Volume 3, Appendix II of the MRP). Quantitative and qualitative data of the major plant communities provided in the 1982 study are also relevant to the North Rilda Area.

Mr. Rick Collins, Mt. Nebo Scientific, identified different vegetation communities in the Rilda Canyon Portal Facilities area and designated reference areas for each community. Of the identified reference areas, only the Sagebrush/Grass (undisturbed), Pinyon Juniper/Mountain Brush (undisturbed), and White Fir/Aspen reference areas have been established. A reference area for the pre-disturbed area (AMR/AML) was identified by Mt. Nebo Scientific; a portion of this area is used for topsoil storage to minimize the footprint and to keep all disturbances within the permit boundary (refer to Volume 11 Appendix Volume, Biology, Appendix A). The pre-disturbed areas (AMR/AML) will be seeded with Pinyon-Juniper/Mountain Brush seedmix at final reclamation and be held to the undisturbed reference area standards for reclamation. Map 300-2 of this section, depicts the location of each of the three undisturbed reference areas mentioned above.

The most dominant plant community in the facilities area is the Pinyon /Juniper/Mountain Brush Transition. The prominent species identified in this area are: Utah Juniper (*Juniperus osteosperma*), Rocky Mountain Juniper (*Juniperus scopulorum*), Pinyon Pine (*Pinus edulis*), Curlleaf Mountain Mahogany (*Cercocarpus ledifolius*), Ponderosa Pine (*Pinus ponderosa*), Big Sage (*Artemisia tridentata*), Salina Wildrye (*Elymus salina*), Indian Rice Grass (*Oryzopsis hymenoides*), Cutler ephedra (*Ephedra cutleri*), corymbed eriogonum (*Eriogonum corymbosum*), and bluebunch wheatgrass (*Elymus spicatus*).

The Mixed Conifer community, identified in Collin's report (refer to Volme 11 Appendix Volume - Biology: Appendix A) as Douglas Fir/White Fir and White Fir/Aspen communities, are found in the upper elevations of the canyon. The most common plant species of the Mixed Conifer community are: White Fir (Abies concolor), Quaking Aspen (Populus tremuloides, Douglas fir (*Pseudotsuga menziesii*), Saskatoon serviceberry (*Amalanchier alnifolia*), corymbed eriogonum (*Eriogonum corymbosum*) and bluebunch wheatgrass (*Elymus spicatus*).

Note: The Trail Mountain Fire that occurred in June of 2018 completely decimated the Mixed Conifer community as described above and resulted in this reference area having to be relocated. The area directly west of the historic White Fir/Aspen was identified by Collins as a good replica for the reference area. Refer to Map 300-2 for the revised reference area location. Also within the map sleeve is a report by Collins justifying the revised location.

Plant communities that were impacted the construction of the portal facilities in North Rilda Canyon were quantitatively sampled. Additionally, similar communities chosen outside the disturbed areas were also sampled to determine appropriate reference areas for the disturbed communities (refer to Volume 11 Appendix Volume - Biology: Appendix B). The Similarity Index (SI) of the disturbed vegetation compared to the reference areas was determined using the Motyka's version of the Sorensen's index (Chambers, Jeanne C., Brown, Ray W., Methods for Vegetation Sampling and Analysis on Revegetated Mined Lands, Report INT-151, United States Department of Agriculture, Forest Service, October 1983):

$$SI = \frac{2\ MW}{MA + MB}$$

Where:

MW = Sum of the smaller importance values of the species or life-forms common to both areas.
MA = The sum of the importance values of all species or life-forms in one area.
MB = The sum of the importance values of all species or life-forms in the other area.

The SI results for the three plant communities are:

White fir/Aspen:	93.5
Pinyon-Juniper/Mountain Brush:	70.3
Sagebrush/Grass:	83.9

UDOGM recommends an SI of at least 70 to show an acceptable comparison between the proposed disturbed and reference area vegetation.

Threatened, Endangered and Sensitive Plant Species

Threatened, endangered, and sensitive plant species of interest in Emery County (2004 review) include *Astragalus monti* (Heliotrope milkvetch), *Hedysarum occidentale var. canone* (Western sweetvetch), *Silene petersonii* (Plateau catchfly), and *Aquilegia flavescens* (Yellow columbine). Populations of these species have been found to inhabit the upper areas near the Rilda Canyon Portal Facilities area. Other listed species of concern include *Cycladenia humilis var. jonesii* (Jones Cycladenia), *Erigeron maguirei* (Maguire Daisy), *Townsendia aprica* Last Chance Townsendia), *Schoenocrambe barnebyi* (Barneby Reed-mustard), *Pediocactus dispainii* (San Rafael Cactus), *Pediocactus winkleri* Winkler Pincushion Cactus), *and Sclerocactus wrightiae* (Wright Fishhook Cactus).

Mr. Rick Collins (Mt. Nebo Scientific) conducted an in-depth vegetation analysis of the area related to the Rilda Canyon Facilities, As stated in his report, “There was a potential of the following plants to be present in the study areas: canyon sweetvetch (*Hedysarum occidentale* var. *canone*) and Link Canyon Trail columbine (*Aquilegia flavescens* var. *rubicunda*). These plants have been listed as “sensitive” in the Manti-La Sal National Forest by the USDA Forest Service. These plants, nor their ideal habitats, were not found during the plant surveys”. In the 2003 study Collins states, “No threatened, endangered, rare or otherwise sensitive plants were observed within the study areas during the course of the field sampling and surveys” (refer to Volume 11 Appendix Volume - Biology: Appendix A.).

Vegetation productivity analysis was conducted by M. Dean Stacy and Jim Brown of the Natural Resources Conservation Service (NRCS) in October 2004 (refer to Volume 11 Appendix Volume - Biology: Appendix B). The NRCS condition rating is 3 levels (Good, Fair, Poor), with sub-ratings of high and low. Though precipitation totals for the year were slightly below normal (85% of normal, based on East Mountain Weather

Station data), the conditions of the reference areas were in the mid range (fair) condition. Productivity values for the communities to be impacted by the facilities are in the report.

R645-301-322 Fish and Wildlife Information

The Rilda Canyon Portal Facilities are all inclusive within the Rilda Canyon drainage, a tributary to Huntington Creek. Water resources within Rilda Canyon provide habitat for a variety of big and small game animals, non-game animals and birds. A complete listing of all theatened and endangered wildlife species that have the potential to be present near and/or within the North Rilda Canyon can be found in the County lists of Utah's Federally Listed Species (UDWR, 8/14/02, at http://www.dwrcdc.nr.utah.gov/ucdc/). Refer to Volume 11 Appendix Volume - Biology: Appendix C for the 5/21/2004 list, by county. A complete listing of all wildlife species that have the potential to be present near and/or within the Rilda Canyon can be found at this same internet address.

The following wildlife information tables includes Threatened and Endangered Species, Sensitive Species, Management Indicator Species, and Priority Migratory Bird Species, listed in Emery County, Utah, and may be present in the Rilda Canyon facilities area. Most data from these tables came from "Wildlife Resources Report for the SITLA - Access on East Mountain Project", Re-revised July 2004, by the Ferron/Price Ranger District, Manti La-Sal National Forest.

Table 300-1: Emery County, Utah Threatened and Endangered Species (Wildlife and Fish) (2004 List)

Species	Species Status	Species Habitat Association	Rilda Habitat Information
Bald Eagle *Haliacetus*	Threatened	Habitat not considered in this area.	May occur incidentally but no nesting is known in the area.
Mexican Spotted Owl *Strix ocidentalis lucida*	Threatened	In Utah, the Mexican spotted owl nests in steep-walled, complex rock canyons at relatively low elevations with mixed conifer stands. Canyons are generally at least 2 kilometers long and less than 2 kilometers wide.	This habitat is in Rilda Canyon, but the elevation is marginal and the canyon does not meet the 2 X 2 rule. The steep-walled outcrops are south facing with conifer habitat generally on the north facing slopes.

Table 300-1: Emery County, Utah Threatened and Endangered Species (Cont.)			
Species	**Species**	**Species**	**Species**
Black-footed Ferret *Mustela negri*pes	Endangered	Depends of prairie dog colonies for food. Grass vegetation is normally associated with this habitat.	Prairie dog colonies have not been observed in the facilities area. Sagebrush/Grass vegetation communities are minimal and mostly at lower elevations.
Canada Lynx *Lynx canadensis*	Threatened	Coniferous forests that have cold, snowy winters. Generally not sufficient large tracts of suitable habit	This habitat does exist in Rilda Canyon, but the large suitable habitat is generally not sufficient.
Southwestern Willow Flycatcher *Empidonax trailii extimus*	Endangered	Riparian habitat, nesting in area with high shrub densities interspersed with openings or meadows.	Riparian habitat is present in the canyon, but this vegetation community is down canyon of the facilities and very narrow.
Bonytail *Gila elagans*	Endangered	Warm water reaches of larger rivers in the Colorado River Basin.	Prime habitat not found. The Rilda Canyon stream is feed by cold springs that originate near the joining of the Left and Right Forks. The stream has great differences in flow during the Spring and Fall flows.
Humpbacked Chub *Gila cypha*	Endangered	Deep, swift mainstream and large tributaries in relatively inaccessible canyons of the Colorado River Basin.	Prime habitat not found. The stream in the Rilda Canyon is not considered a large tributary, is not deep or swift.
Razerback Sucker *Xyrauchen texanus*	Endangered	Mainly along the mainstreams of the Colorado, Greenand San Juan Rivers.	Prime habitat not found. The nearest known population occurs approximately 50 miles from the project area, in the lower San Rafael River and green River.
Colorado Pikeminnow *Ptychocheilus lucius*	Endangered	Species exists only in the upper Colorado River system. Adults prefer medium to large rivers. Young prefer slow moving backwaters. Food source is usually other fish.	Prime habitat not found. Rilda Canyon's stream is small and adult feed is limited.
Whooping Crane *Grus Americana*	Endangered	Primarily found in wetlands, but pastures and cultivated fields are also habitats.	Prime habitat not found. Some riparian vegetation is found down stream of the mine site, but it is not the wet, open area preferred.

Table 300-2: Sensitive Species (Utah Conservation Data Center and Manti-LaSal Forest) (2004 List)		
Species	**Species Habitat Association**	**Rilda Habitat Information**
Spotted Bat *Euderma maculatum*	Habitat consists of a variety of vegetation types in elevations ranging from 2,500 to 9,500', including riparian, desert shrub, spruce/fir, ponderosa pine, montane forests and meadows.	Habitat in Rilda. Small areas of several of the vegetation communities are present. A bat survey in Rilda Canyon was conducted in October 2004. (Refer to Appendix G)
Townsend's Big-eared Bat *Plecotus townsendii pallescens*	Hibernates in caves and mines. The mixed conifer vegetation communities in the canyon provides suitable habitat for foraging.	Habitat in Rilda. Caves are not found in the area in the area, but the south facing escarpments could be considered habitat. A bat survey in Rilda Canyon was conducted in 2004. (Refer to Appendix G)
Northern Goshawk *Accipiter gentilis*	Mixed Conifer vegetation stands in this elevation.	Habitat in Rilda. Mixed Conifer communities are present in Rilda Canyon, but the stands are on the north facing slopes and away from the facilities' activities.
Three-toed Woodpecker *Picoides tridactylus*	Forests containing spruce, fir, ponderosa pine, tamarack, and lodgepole pine.	Habitat in Rilda. Small, mixed stands of spruce/fir communities are on the north facing slopes. A few ponderosa pines are on the south facing PJ/Mountain Brush communities.
Colorado Cutthroat Trout *Oncorhynchus clarki pleuriticus*	Require cool, clear water in streams with well vegetated banks, which provides cover and bank stability. Deep pools and structures such as boulders and logs provide instream cover.	Habitat in Rilda Canyon. Two fish and invertebrate surveys were conducted during 2004. Flows vary in the stream during the spring and fall. Turbidity increases during spring runoff and summer storm events. (Refer to Appendix D)
Bonneville Cutthroat *Oncorhynchus clarki utah*	Requires a functional stream riparian zone, which provides structure, cover, shade, and bank stability. Found in this habitat ranging from high elevation mountain streams and lakes to low elevation grassland streams.	Habitat in Rilda Canyon. Two fish and invertebrate surveys were conducted during 2004. Species was not identified. (Refer to Appendix D)

Table 300-2: Sensitive Species (Cont.)		
Species	**Species Habitat Association**	**Rilda Habitat Information**
Spotted Frog *Rana luteiventris*	Habitat preference is isolated springs and seeps that have a permanent waster source. Isolated populations exist in the West Desert and along the Wasatch Front.	Habitat in Rilda Canyon
Greater Sage-grouse *Centrocercus urphasianus*	Also known as the Sage-hen and the Sage-chicken. Habitat is sagebrush plains, foothills and mountain valleys. Sagebrush is the predominant plant of quality habitat.	Small sagebrush communities are in Rilda Canyon.
Peregrine Falcon *Falco peregrinus*	The species is distributed very widely, breeding in a variety of habitats.	Rilda Canyon cliffs could be habitat for Peregrine falcon nesting. Annual raptor surveys are conducted in Rilda Canyon.
Flammulated Owl *Otus flammeolus*	Prime habitat is Montane forests, especially ponderosa pine forests. Species is considered widespread in Utah, but breeding occurs primarily in the southwestern and north-central parts of the state.	Habitat in Rilda Canyon. The north facing slopes is mixed conifer community. Some individual Ponderosa pines are present in the bottom of the canyon.

Table 300-3: Other Wildlife Species of Consideration (2004 List)		
Species	**Species Habitat Association**	**Rilda Habitat Information**
Mule Deer *Odocoilus hemionus*	Mixed conifer forest, Pinyon/Juniper/Mountain Brush and sagebrush communities are suitable habitat.	High value winter and critical summer habitat are in Rilda Canyon. Mule Deer are found in the canyon.
Rocky Mountain Elk *Cervus canadensis*	Tend to occupy higher elevation aspen and mixed conifer communities in spring through fall, and move to lower Pinyon/Juniper and sagebrush communities during the winter months.	High value winter, critical summer, and critical winter habitat are in Rilda Canyon. Elk are known to use the area in late spring, summer and fall.
Moose *Alces alces*	Marshy, riparian type communities.	High value winter and critical smmer habitat are in Rilda Canyon. Moose transplants have been seen in canyons near the Rilda Canyon.
Mountain Lion or Cougar *Felis concolor*	Species is fairly common throughout Utah's mountainous areas. Diet is composed of deer, rabbits, rodents and other animals.	Habitat in Rilda Canyon.
Black Bear *Ursus americanus*	Species is common is Utah's large forested areas. Diet is composed of fruits, insects, grubs, some small vertebrates, and carrion.	Habitat in Rilda Canyon.
Wolverine *Gulo gulo*	Prefer alpine tundra and mountain forest habitats. Eats a variety of food, including eggs, roots, carrion and many types of animals.	Habitat in Rilda Canyon.
Golden Eagle *Aquila chrysaetos*	High cliffs are used for nesting. Search for prey in high mountain brush, perennial forb, and high elevations perennial grassland habitat.	One golden eagle nest is known in the canyon. Annual raptor surveys are conducted in the canyon and other areas of East Mountain.
Macroinvertebrates (Aquatic Species)	Stream and riparian habitat	This habitat exists in Rilda Canyon. Two fish and invertebrate studies were conducted in 2004.

Table 300-4: Migratory Birds (2004 List)		
Species	**Species Habitat Association**	**Rilda Habitat Information**
Virginia's Warbler *Vermivora virginae*	Preferred breeding habitat includes chaparral and open stands of pinyon/juniper, ponderosa pine and scrub oak, mountain mahogany thickets on dry mountainsides.	The preferred scrub hillsides, scrub oak, is not present in Rilda Canyon, but small stands of pinyon/juniper and mountain mahogany occur. There have been no known confirmed nesting sites found on the Manti-La Sal National Forest.
Black Rosy-Finch *Leucosticte atrata*	Breeding populations occur as high as 11,000' in Utah. Habitat is crevices or holes in inaccessible vertical cliffs.	High cliff habitats are present in the area. Generally, could only be considered in the area during slight shifts southward, moving south out of Montana and northen Wyoming.
Broad-tailed Hummingbird *Selasphorus platycercus*	Primary breeding habitat is lowland riparian communities, but have also been recorded in aspen, mountain riparian, ponderosa pine, Engelmann spruce, subalpine fir, and Douglas fir. Nesting typically occurs at elevations ranging from 6,000 to 8,000'.	Primary habitat not present in Rilda Canyon. Upper nesting elevation is at the facilities elevation.
Black-throated Gray Warbler *Dendroica nigrescens*	Preferred breeding habitat includes dry oak slopes, pinyon/Juniper, open mixed woods and dry coniferous and mixed conifer habitats, with grassy understories. Elevation is up to 5,400'.	Habitat found in Rilda Canyon, but the canyon elevation is above the upper elevation limit
Gray Vireo *Vireo vicinior*	Species breeds on arid slopes dominated by mature pinyon-juiper and juniper woodlands in southwestern Utah, north to Sevier County.	Habitat found in Rilda Canyon.

Table 300-4: Migratory Birds (Cont.)		
Species	**Species**	**Species**
Brewer's Sparrow *Spizella breweri*	Primary habitat is Utah is the shrub steppe habitat. However, Brewer's sparrows may also be found in high desert scrub (greasewood) habitats. They may also breed in large sagebrush openings in pinyon-juniper or coniferous forest habitats.	Habitat found in Rilda Canyon.
Sage Sparrow *Amphispiza belli*	Species occurs throughout Utah during the spring and summer months, but primarily in the southwestern portion of the state during the winter. Prefers shrubland, grassland and desert habitats.	Habitat exists in small stands of sagebrush/grass communities in the canyon.

Aquatics within the Rilda Canyon Creek corridor were protected during construction and operation activities by placing silt fence or other acceptable best management practice (BMP) along the southern edge of the disturbance. The silt fence or other acceptable BMP will be removed when the UDOGM determines that vegetation is sufficiently established. The surface yard was constructed to slope towards the north. In addition, the topsoil pile will have silt fence or other acceptable BMP installed around the slopes that can drain treated runoff to the stream. Wildlife was protected by conducting construction during months that minimized impacts to breeding and birthing activities.

A rat midden site is located near the facilities area. There was no actual disturbance in this area. It is protected by placing a 6 foot chainlink fence around the base.

I. Aquatic Species

The Utah Division of Wildlife Resources (UDWR) has conducted aquatic surveys of the perennial and intermittent streams in the area. The following information summarizes the representative game species in the Right Fork Rilda Creek.

Benthic Invertebrates - The USGS in cooperation with the UDWR and Utah Division of Oil, Gas, and Mining (UDOGM) conducted a comprehensive hydrologic study (from July 1977 through September 1980) of the upper drainages of the Huntington and Cottonwood Creeks ("Hydrology of the Coal-Resource Areas in the Upper Drainages of Huntington and Cottonwood Creeks"). Data on benthic invertebrates were collected from 16 sites in October 1977, July and October 1978, and October 1979. This data is cited and used as a reference source in comparison baseline evaluation conducted during 2004 and 2005 for the North Rilda Canyon area. (Refer to United States Geological Survey, Water-Resource Investigations, Open-File Report 81-539, Salt Lake City, Utah, 1981)

As written from the report, "...data indicate that there were significant seasonal differences in the benthic invertebrate population at a given site in addition to areal differences...These organisms appeared in their maximum numbers in the July samples collected at sites in the higher altitudes of the study area, but they were not present in any of the October samples. The large numbers found in July, reflected a seasonal cycle rather than an unnatural condition that allowed one species to dominate." The average diversity (Shannon-Weiner diversity index) found between 1977 and 1979 in Rilda Canyon was 2.84.

In addition to the previous studies of Rilda Creek drainage, UDWR conducted biological organism and habitat studies of Rilda Creek in the spring of 2004(refer to Volume 11 Appendix Volume - Biology: Appendix D). As stated in the report entitled "*Preliminary Report on Surveys Conducted to Determine Potential Impacts of Rilda Surface Facility Development in Rilda Canyon During 2004*", representatives of the UDWR, Southeastern Region were asked by the UDOGM to participate in an on-site meeting, discuss the impacts of this project on the biota within Rilda Canyon, and aid in the development of a comprehensive EA. During this and subsequent meetings it was decided that UDWR would conduct pre and post-disturbance evaluations of macroinvertebrate populations and identify resident fish populations in Rilda Creek. This preliminary report, plus the reports that will be generated from the spring and fall 2005 surveys, marks the completion of the pre-disturbance baseline data sampling effort. Details on the methodology employed during macroinvertebrate and fish sampling and a limited results section are included in this report. Refer to Volume 11 Appendix Volume - Biology: Appendix D for a copy of the preliminary report. A copy of the final report will be included upon completion by UDWR. The Preliminary Report, indicates the presents of fish in the Rilda Canyon stream. Brown trout *(Salmo trutta)*, and cutthroat trout *(Oncorhynchus clarki)*, two salmonid species were found. No fish were found above the stream crossing. As suggested, the stream along the disturbed facilities area will be protected to minimize the impacts of sedimentation and reduction of water quality below the side drainage undisturbed bypass culvert installations. Disturbed runoff will be treated as outlined in the Hydrology Section.

An additional study of the area was conducted by Cirrus Ecological Solutions in the fall of 2004. Spring and fall surveys will be conducted in 2005. The results in this Preliminary Report are similar to previous (Walker) survey. Brown trout and cutthroat trout were observed. Refer to Volume 11 Appendix Volume - Biology: Appendix D, for this report. The 2004 -2005 surveys will serve as baseline aquatic data for Rilda Creek.

II. Terrestrial Species

Wildlife studies have been conducted within the Deer Creek Mine permit areas and those areas adjacent to it. The wildlife habitats of the North Rilda Area include Mixed Conifer, Pinyon-Juniper/Mountain Brush, and Sagebrush/Grass communities. Descriptions of these and other habitats that exist within the permit and adjacent boundaries have been given in previous wildlife sections of the MRP. "Species of Special Significance", threatened, endangered, and "Special Status Species" have been described previously. Table 1 of Volume 1, Part 2 of the MRP lists Vertebrate Species of the Wasatch Plateau of which the Deer Creek Mine permit and adjacent area and the North Rilda Area are part. The tables include the species status (common, rare, threatened, etc.), the habitats in which they occur, and the likelihood of their occurrence within the boundaries of the lease area.

Mule Deer, Elk, and Moose habitats have been mapped for the permit and adjacent areas. Refer to Maps 300-3, 300-4, and 300-5 of this section to view the areas. “Critical Summer Range”, “Critical Winter Range”, and “High Value Winter Range” are shown on the maps. The Utah Division of Wildlife Resources indicate that the entire Rilda Canyon area is habitat for Mountain Lion and Black Bear. UDWR also have records of occurrence for wolverine eight miles northwest and thirteen miles southwest of Rilda Canyon. Habitat for the Canadian Lynx is also found in the Rilda Canyon area. The wolverine and lynx habitat maps, found on the UDWR web site (http://dwrcdc.nr.utah.gov/ucdc/default.asp) are shown as “predicted habitat” and not “known habitat” maps.

Raptor nesting studies and nest mapping have been conducted in the North Rilda Area. Much of the area is raptor nesting habitat. Specific nests have been numbered and mapped in the area (this report has been submitted to the Division of Oil, Gas and Mining only and is found in PacifiCorp’s Confidential Files, located at the UDOGM office) The status of the two nests in Rilda Canyon have also been submitted and are part of the Confidential Files. Nest information and locations are based on results from the 2004 annual raptor survey conducted by Energy West Mining Co., in conjunction with the Utah Department of Wildlife Resources. Energy West Mining Co. conducts annual raptor surveys in the area. The results of those surveys are available upon request.

A Ventilation Fan Sound Survey was conducted in November 2004; see Volume 11 Appendix Volume - Biology: Appendix E. Results indicate that the sound frequency and volume of the fans in Rilda Canyon will be near background levels at the perennial stream origination point.

R645-301-322.210 Threatened and Endangered Species

The Environmental Assessment (Mill Fork Federal Coal Lease Tract UTU-71307, Environmental Assessment, LBA Application #11. June, 1997), MRP Volume 12 reports “No threatened or endangered wildlife species are known to inhabit the proposed lease area. A Bald Eagle (*Haliaeetus leucocephalus)* nest near the Hunter Power Plant is

approximately 26 miles southeast of the coal lease. The coal lease area is outside of the foraging area for the Bald Eagles. No roost sites have been found in the lease area ..."

Other TES information applicable to the North Rilda Canyon Portal Facilities:

Mexican Spotted Owls (MSO) have recently become a species of interest since the U.S. Fish and Wildlife Service (USFWS) designated (in January, 2001) 4.6 million acres on federal lands in Arizona, Colorado, New Mexico, and Utah as critical habitat. The designation includes 3.2 million acres in Utah. More specifically, the designation includes areas west of the Colorado River within the West Tavaputs Plateau in Carbon County and the northeast corner of Emery County east of US Highway 6. Other areas in Utah have been designated as critical habitat, however, these areas exist in the southern portion of the state. Typical MSO, habitat according to the 2001 Environment Assessment (Environmental Assessment, Designation of Critical Habitat for the Mexican Sotted Owl, January 2001, U.S. Fish and Wildlife Service, New Mexico Ecological Services Field Office, Albuquerque, New Mexico), consists of "a diverse array of biotic communities. Nesting habitat is typically in areas with a complex forest structure or rocky canyons, and contains uneven-aged, multi-storied mature or old growth stands that have high canopy closure (Ganey and Balda 1989, USDI 1991). In the northern portion of the range (southern Utah and Colorado), most nests are in caves or on cliff ledges in steep-walled canyons....typically characterized by the cooler conditions...frequently contain small clumps or stringers of ponderosa pine, Douglas fir, white fir, and/or pinyon-juniper".

Dr. Dave Willey from Montana State University, known Mexican Spotted Owl expert, modeled representative habitat using the 2000 Willey-Spotskey Mexican Spotted Owl Habitat Model. The model included the Manti-LaSal area. Figure 300-1 includes the North Rilda Canyon area, with the Mill Fork Lease area outlined. Areas identified in black, are areas of potential nesting habitat. The green's are identified as potential foraging areas of steep sloped mixed conifers. However, it is reported in the UDWR's *Inventory of Sensitive Species and Ecosystems in Utah, 1997* that foraging, nesting and roosting habitats are "dominated by Douglas-fir and/or white fir...In the northern portion of the range (southern Utah and Colorado), most nests are in caves or on cliff ledges in steep-walled canyons." Potential steep sloped, mixed conifer foraging habitats of this type are found on the extreme northeastern border, extreme western border, and a small area in the southwest corner of the Mill Fork lease area as illustrated in Figure 300-1. Large ponderosa pines are typically found in lower elevations in the rocky canyons. The Rilda Canyon drainage is depicted in the lower right corner of Figure 300-1. The Rilda Canyon supports both aspen and Douglas fir stands, and has cliff ledges or steep walled canyons recognized as typical foraging habitats.

On October 5, 2004, a habitat suitability determination study was conducted by EIS Environmental & Engineering Consulting. Refer to Volume 11 Appendix Volume - Biology: Appendix F for the report. The summary of this report states that MSO habitat constituents are in Rilda Canyon.

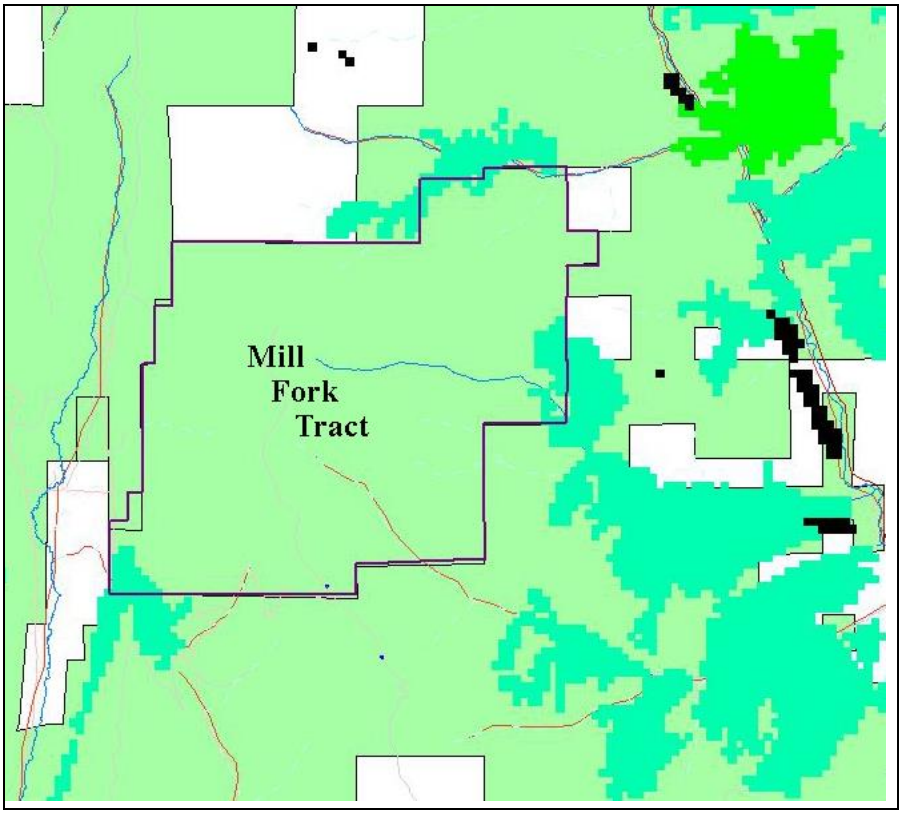

Figure 300 - 1: Mexican Spotted Owl nesting and foraging areas (Dr. Dave Willey, Montana State University, 2000).

The Spotted bat *(Euderma maculatum)* depends on cliffs for roost/hibernation areas. These areas exist in isolated locations in the south facing slopes of Rilda Canyon. Energy West Mining Company and Genwal Resources in 1997, contracted Richard Sherwin, Dr. Duke Rogers, and Carl Johansson to conduct a bat survey in the areas of Huntington Canyon, Straight Canyon, and Cottonwood Canyon. The purpose of this survey was to assess the distribution, abundance, and habitat requirements of the Townsand big-eared and Spotted bats. These parameters were investigated for the following: 1) areas under consideration as potential lease sites for mining (North Rilda Area, Cottonwood Canyon LBA and the Mill Fork lease); 2) sites where subsurface coal mining is onging, and 3) sites (both on and off the Manti-La Sal National Forest) that serve as controls (no mining activties). The results of this surveys (Refer to Volume 12 Appendix A: *Assessment of Spotted Bat (Euderma maculatum) and Towsend's Big-eared Bat (Corynorhinus townsendii) in the Proposed Cottonwood Canyon, North Rilda Area and Mill Fork Lease areas, Manti La Sal National Forest, Emery County, Utah.)* are as follows:

Use assessment for Townsend's big-eared bats in specified areas
No Townsend's big bats were located within the survey areas during the project.

Use assessment for Spotted bats in specified areas
No Spotted bats were mist netted during these studies; refer to Volume 12 Appendix A Table 1 for a summary of results. There is some indication that water source(s) may not be as critical for the Spotted bat as for other species of bats with which it co-occurs. In a study of urine concentrating ability among selected species of bats, the spotted bat could concentrate its urine more effectively than any species of bats evaluated, with the exception of two typically "desert species", the pallid bat (Antrozous pallidus) and the Western pipistrelle (Pipistrellus hesperus - Geluso, 1978). It is likely that the Spotted bats were using water sites specifically to forage rather than drink, making netting extremely difficult.

Spotted bats were observed throughout the eastern (lower elevation) portions of the study areas. The highest concentrations of calls were recorded in Rilda and Huntington Canyons. These canyons seem to best represent "classic" Spotted bat habitat with an abundance of fractured sandstone cliffs, and large areas of suitable foraging habitat.

From three studies, it appears that Spotted bats are using the cliffs as roosting areas and the canyons as flyways to reach the lower elevation foraging areas. The principal Spotted bat foraging areas are located over the lower elevation riparian habitat located near the mouth of Huntington Canyon. Spotted bats concentrated foraging efforts above the upper canopy of intact riparian vegetation, particularly cottonwood trees (Populus ssp.).

Spotted bats were not restricted to the study areas, but rather are widely distributed in low densities throughout the entire area. In fact, Spotted bats were detected in suitable habitat throughout the area (including utilizing the parking lots of the Village Inn Motels in Huntington and Castledale).

There also is evidence that the Spotted bats tolerate at least moderate human disturbance while foraging. Surveys were conducted at several sites near roads with light to moderate vehicular traffic (Crandall Canyon, Huntington Canyon), including tandem trucks used for hauling coal from the Genwal Mine portal located in Crandall Canyon. Spotted bats were observed foraging at low elevations sites off the lease areas, sometimes within 30 meters of the right of way.

Spotted bats are common throughout the Huntington Canyon area. They were identified utilizing the lease areas (North Rilda and Mill Fork), the active mine permit areas and the control sites (refer to Volume 12 Appendix A, Table 2). Based on the number of individuals observed and their habitat use patterns, it does not appear that current mining practices represent a long term threat to the viability of this population. The bat communities in all areas sampled consist of the same suit of species among all areas of similar habitat and complexity (this includes sites in actively mined areas, control sites, and proposed lease areas (North Rilda and Mill Fork).

The fact that Spotted bats are relatively common in active and previously mined areas implies that past cliff failures have not dramatically impacted resident populations. As a cliff roosting species, it is likely that they have adapted to tolerate natural rock falls and subsidence. Mine related cliff failures do not generally result in a net loss of habitat (ie. cliffs), but rather provide replacement habitat which may later be colonized by members of the local population. The results of the study indicate that Spotted bats are “common” enough throughout the area that the localized failure of cliffs (as a result of coal mining within the proposed lease areas [North Rilda Area and Mill Fork]) does not pose a serious threat to the population as a whole.

An additional bat habitat study was conducted in October 2004 by Joel and Gabrielle Diamond, Refer to Volume 11 Appendix Volume - Biology: Appendix G. This study was specific to the Rilda Canyon area. Findings in the 2004 study were similar to the 1997 study.

R645-301-323 Maps and Aerial Photographs

The map for vegetation diversity is located in the Maps Section of R645-301-300: Biology of this volume (Map 300-1). Deer, elk, and moose habitat are located on Maps 300-3, 300-4 and 300-5. The Raptor nest map has been transmitted to the Division of Oil, Gas and Mining, and is part of PacifiCorp's confidential files, located in the UDOGM office. In addition to biologic base maps provided in this section, PacifiCorp conducts annual reconnaissance surveys, including subsidence monitoring (annual aerial photogrammetric surveys), infrared photography (5 year intervals), and hydrologic monitoring.

R645-301-330 OPERATION PLAN

Protection and Enhancement:
Methods, devices, and procedures to protect fish, wildlife and stream degradation during construction, operation and reclamation activities are:

1. Reduced disturbed footprint.
   As depicted in Volume 11 - Engineering, Maps Section, Map 500-1, the Rilda Canyon Portal Facilities are located in an area disturbed by historical coal mining. This disturbed land is part of the historic coal developments known as the Helco, Leroy, Rominger, and Jeppson mines. All of the mines were reclaimed by AML in 1988. The historic mine sites disturbed a total of 10.67 acres. Of the 7.28 total disturbed acres, 1.79 acres are on land pre-disturbed by the historical mine sites. The pre-disturbed land is 24.6% of the total disturbed at the Rilda Canyon Portal Facilities. PacifiCorp commits to enhancing the previously disturbed area[1] to revegetation standards relative to the non-disturbed reference areas. In addition to the designing the facilities utilizing the previously disturbed area, PacifiCorp negotiated with Andalex Resources to acquire a right-of-way within the existing Genwal Mine disturbed area for a future breakout associated the Deer Creek Mine. Originally, PacifiCorp included a potential breakout for the Deer Creek Mine within the Mill Fork Lease ML-48258 located in Crandall Canyon upstream from the existing Genwal Mine. The ventilation breakout in Crandall Canyon would have required access road and pad disturbing approximately 1.0 acre near Crandall Creek. As a result of the right-of-way acquisition, overall the disturbance associated with the Deer Creek Mine will be reduced.
2. The surface yard ~~has been~~ was constructed such that all surface runoff flows to the north, away from the stream, to a disturbed culvert system. (Refer to Engineering and Hydrology Sections for plan to treat disturbed runoff).
3. A Barrier ~~has been~~ was installed along the surface yard's southern disturbed boundary (closest disturbance near the stream).

---

1 **Note: In May 2019 all topsoil was removed from the pre-disturbed area of the topsoil storage site. Emery County, through funding by the Natural Resource Conservation Service (NRCS), has plans for constructing sediment control and diversion structures over the entire area of the 0.51 acre topsoil storage site (refer to Volume 11, Appendix Volume, Hydrology, Appendix E for plans and designs). These structures will protect the North Emery Water Users Special Services District (NEWUSSD) spring collection area from high sediment loaded storm water runoff generated as a result of the 2018 Trail Mountain Fire that burned the areas above the site. No salvaged soils will be used in this location nor will final reclamation be performed. Therefore, since meeting the vegetation standards will not be required for this area, the Utah Coal Rules do not require a 10 year responsibility period.**

4. Interim vegetation on slopes and topsoil piles.
5. Buffer Zones markers placed along the south disturbed border to make construction workers aware of the location of the stream.
6. Reduced speed limit on the mine access road (Emery County Road #306).
7. Compliance with a Spill, Prevention, Control and Countermeasures (SPCC) Plan for the mine facility. The SPCC Plan is required under 40 CFR 112. It's primary use is prevention, reporting and clean-up of spills.
8. Compliance with and Air Quality Approval Order for the mine facility.
9. Annual raptor survey
10. To limit the impact on wildlife, the facility disturbance is located below the stream crossing at the forks of Rilda Canyon. Wildlife can continue to use the area for access from one fork to the other.
11. Raptor safe power poles have been installed in the facilities following PacifiCorp's "Guidelines For Managing Birds on Powerlines", refer to Volume 11 Appendix Volume - Biology: Appendix H. (All power poles and power lines associated with the Deer Creek Mine have been demolished and removed in all of Rilda Canyon)
12. Startup construction (commenced April 15, 2006) and startup of reclamation activities will not take place between December 1st and April 15th, an exclusionary time for wintering and calving periods. All access prior to April 15, 2006 to the Rilda Canyon Facilities was approved by the Division on a case-by-case basis.

In addition to the protection and enhancement methods, devices and procedures listed above, PacifiCorp in cooperation with the regulatory agencies has developed a series of mitigation commitments to enhance and mitigate potential impacts associated with the Rilda Canyon development related to big game species, raptors, riparian habitat (aquatic species, bats and migratory birds) and noxious weed control. The list details the mitigation commitments:

Wildlife Mitigation Commitments:

Table 300-5: Rilda Canyon Wildlife Mitigation

Wildlife	Project	Project Summary	Overseeing Agency(s)	General Objective	Date of Implementation	Required Reporting
Big Game Species	Leroy Mine Area; Buried Coal Removal and Landscape Enhancement	Leroy Coal Mine operated during the 1940's through the 1950's. Development included a narrow access road, two portals and coal storage and haulage area. Soil/geotechnical surveys delineated an area containing approximately 4,000 tons of buried coal. In addition, these surveys also documented that the depth of soil was limited in this area and ultimately affected the success and diversity of the revegatation. PacifiCorp proposes as part of the development of Rilda Canyon to remove the buried coal within the proposed disturbed area. During final reclamation, PacifiCorp commits to reclaiming this area to the same standards as areas previously not disturbed, including committing the revegetation standards to non-disturbed reference areas.	DOGM	To achieve reclamation of the Leroy Mine buried coal area with vegetation success similar to the non-disturbed reference area.	Project will be initiated and be completed during the development of the facilities, approximately two years.	Certified as-built drawings after the construction of the Rilda Canyon facilities. This project was completed August 2006, Refer to Map 300-6 in the Maps Section

Table 300-5: Rilda Canyon Wildlife Mitigation

Wildlife	Project	Project Summary	Overseeing Agency(s)	General Objective	Date of Implementation	Required Reporting
Big Game Species	Abandoned Mine Areas Outside of the Proposed Disturbance	Cooperate with Abandon Mine Lands (AML), United States Forest Service (USFS) to reclaim and enhance the Leroy Mine access road and portal site, including access road, buried coal, historic coal spills and portal highwalls.	DOGM, USFS	To achieve reclamation success of the Leroy Mine disturbed area outside the proposed Rilda Canyon facilities boundaries with vegetation success similar to the non-disturbed reference area. PacifiCorp will utilize available soil resources to backfill the portal bench and access road. The entire area will be recontoured to approximate original contour to the extent possible. After completion of the backfill and grading process, the entire area will be pocked and seeded as outlined in the Biology and Engineering Sections for areas within the proposed disturbed area.	Project will be initiated and completed during the development of the facilities, approximately two years.	Upon completion of the project, PacifiCorp will develop a report documenting the restoration project. This project was completed August 2006, Refer to Map 300-6 in the Maps Section

Table 300-5: Rilda Canyon Wildlife Mitigation

Wildlife	Project	Project Summary	Overseeing Agency(s)	General Objective	Date of Implementation	Required Reporting
Big Game Species Small Game Species Migratory Birds	Habitat Protection on East Mountain Private Land	"PacifiCorp owns and controls approximately 4,440 acres of private lands on East Mountain within the Manti-LaSal National Forest boundary in Emery County, Utah. These private fee lands are located amongst federal lands and have unrestricted open range access to the southern and eastern portions of East Mountain together with open range on 440 acres of fee lands in the northern area in Rilda Canyon. PacifiCorp manages these private lands for multiple use and has no plans for development which would impair wildlife habitat, seasonal livestock grazing or recreation."	NA	Maintain ownership and control of East Mountain properties throughout the life of the Rilda Canyon facilities. These lands will be managed for multiple use. Use which would impair wildlife habitat, such as seasonal livestock grazing or recreation will be limited.	NA	NA

Table 300-5: Rilda Canyon Wildlife Mitigation

Wildlife	Project	Project Summary	Overseeing Agency(s)	General Objective	Date of Implementation	Required Reporting
Raptor Species	Company News Letter	Periodically include in the company newsletter awareness of highway deer kill and the impacts to raptors.	NA	Increase awareness of the potential impacts associated with traffic and raptors. PacifiCorp will periodically make available to employees special newsletters outlining the potential impacts of raptor mortality and corrective measures to reduce these impacts. Coordinate with Emery County Road Department to install warning signs along Emery County road #306.	Upon issuance of the Rilda Canyon permit, PacifiCorp will initiate the educational newsletters to mine employees and contact Emery County Road Department.	NA
Riparian Habitat Big/Small Game Species Migratory Birds Aquatic Habitat	Rilda Creek Sediment Loading Reduction Project	Rehabilitate through sediment and erosion control activities the perennial portion of Rilda Creek, from Rilda Canyon Springs to the mouth of the canyon. Coordinate with government agencies to facilitate the project. Project would involve approximately two miles of stream corridor.	DWR, USFS, DOGM	Install best management practices (BMP's) to control erosion and reduce sediment loading throughout the perennial reach (approximately two miles) of the Rilda Creek. Sediment and erosion control will involve a systematic approach: identify the problems and opportunities, develop project goals and objectives, select and design BMP alternatives, implement selected designs, monitor results and modify designs if necessary.	Upon issuance of the Rilda Canyon permit, PacifiCorp will coordinate initial meeting with governmental agencies necessary funding to complete all work within one year after the completion of the reconstruction of EC#306.	N/A This project was completed November 2008

General	Noxious weed program	PacifiCorp will monitor Rilda and Mill Fork Canyons annually for noxious weeds. Manually/chemically treating methods will be used to control noxious weeds.	DOGM and USFS	Control noxious weeds in Rilda and Mill Fork canyons. PacifiCorp will use manual methods and if necssary institute chemical treatment program to eradicate noxious weeds. If chemical treatment is necessary, PacifiCorp will follow a DOGM/USFS approved application plan and apply for necessary permits and approvals from the USFS.		NA

A brief summary of the facilities that have been constructed are: side drainage, undisturbed by-pass ditches, and culverts, disturbed ditches and culverts, fueling area, trash bunker, rock dust silo, non-coal waste storage, sediment pond, fan, generator, and some designated storage areas. Steep slopes (retaining walls), created during construction of the facilities were supported using geotechnical design criteria.

Buffer zones along the stream ~~have been~~ were established and marked with "Buffer Zone" signs to minimize potential impacts to the stream.

To protect the vegetative growth media, the topsoil was removed prior to construction of the facilities (Refer to the Soils Section of this permit). The top soil storage area is designated on Map 200-1 in R645-301-200: Soils. Erosion protection includes deep pocking, interim vegetation and silt fence or other acceptable BMP until the vegetation is established. A "Topsoil" sign~~s~~ has been placed at the foot of the pile for location awareness.

Note: As of the completion of reclamation, no topsoil remains at this site. Emery County, through funding by the Natural Resource Conservation Service (NRCS), has plans for constructing sediment control and diversion structures over the entire area of the 0.51 acre topsoil storage site (refer to Volume 11, Appendix Volume, Hydrology, Appendix E for plans and designs). These structures will protect the North Emery Water Users Special Services District (NEWUSSD) spring collection area from high sediment loaded storm water runoff generated as a result of the 2018 Trail Mountain Fire that burned the areas above the site. No salvaged soils will be used in this location nor will final reclamation be performed.

Erosion control is discussed in the Engineering and Hydrology sections of this volume.

Baseline data for aquatic species included spring and fall surveys in 2004 and 2005 prior to facilities construction. Post construction surveys were conducted in the spring and fall of 2008. A spring survey was conducted once every 3 years, using the same protocol and sampling sites as the 2004 surveys. These operational surveys were conducted in 2011, 2014, and 2017. Due to the burning of most of the Rilda Canyon drainage area by the Trail Mountain wildfire in June, 2018, and the resulting changes in sediment load and damage to the stream bed due to the post-fire sediment control construction, the surveys have been discontinued.

Second mining (ie. longwall extraction) of the North Rilda area was limited to the ridge separating Rilda and Mill Fork canyons. Second-mining full extraction did not occur beneath the stream channels of these canyons. First mining (i.e. mainline development) occurred below the Right Fork of Rilda Canyon. For a complete analysis of the proposed "no subsidence" design of the 4th North Mains development within the Right Fork of Rilda and the long-term stability analysis refer to the Volume 11, Appendix Volume - Engineering: Appendix A.

To protect the alluvial/colluvial system of the Right Fork of Rilda Canyon a stream buffer zone was established based on the extent of the stream corridor and the angle of draw from the Hiawatha Seam, the lowest seam to be mined. The stream corridor within the Right Fork of Rilda Canyon was delineated by field observation, aerial photography, and map contour analysis. The extent of the identified zone is based on the contact of the alluvial/colluvial fill with the canyon's side slopes.

The angle of draw was calculated from the Hiawatha Seam horizon/elevation @ 15 degrees to the point of intersection on the surface. The stream buffer zone delineates the area restricted to full extraction mining. The referenced 15 degree angle of draw is an industry/agency accepted standard used for delineation of surface influence protection from mining areas considered for full extraction mining. Mining experience at PacifiCorp's Deer Creek, Cottonwood, and Trail Mountain mines has provided a sound, scientific basis for using the 15° angle of draw mentioned above (refer to Annual Subsidence Reports of the Deer Creek MPR).

R645-301-340 RECLAMATION PLAN

The following sections contain plans for final reclamation and revegetation of the Rilda Canyon Facilities. All disturbed lands (with the exception of the 0.51 acre topsoil storage site)[2] will be reclaimed as part of the post mining land use stipulations for grazing, wildlife and recreation. The plan complies with the biological protection performance standards of the State Program. ~~The reclamation plan for the Left Fork facilities is found in Volume 2, Part 4, of the Deer Creek Mine permit.~~

R645-301-341 Revegetation

Table 300-6 discloses the timetable in which reclamation will be conducted on the North Rilda Canyon portal facilities. Much of the operations will be conducted simultaneously. The main emphasis of reclamation will work from the top of the canyon to the bottom.

Table 300-7 establishes a monitoring program that extends through the responsibility period of the bond.

2 **Note: In May 2019 all topsoil was removed from the pre-disturbed area of the topsoil storage site. Emery County, through funding by the Natural Resource Conservation Service (NRCS), has plans for constructing sediment control and diversion structures over the entire area of the 0.51 acre topsoil storage site (refer to Volume 11, Appendix Volume, Hydrology, Appendix E for plans and designs). These structures will protect the North Emery Water Users Special Services District (NEWUSSD) spring collection area from high sediment loaded storm water runoff generated as a result of the 2018 Trail Mountain Fire that burned the areas above the site. No salvaged soils will be used in this location nor will final reclamation be performed. Therefore, since meeting the vegetation standards will not be required for this area, the Utah Coal Rules do not require a 10 year responsibility period.**

Table 300-6: Rilda Canyon Portal Facilities Reclamation Schedule: Initial Reclamation for mine facilities

#	Project	Estimated Scheduling *											
	Months	1	2	3	4	5	6	7	8	9	1 0	1 1	1 2
1	Soil Sampling	Sampling conducted.											
2	Structure Removal												
3	Closures – Portals & Ventilation												
4	Hauling, Backfilling, Compaction & Grading												
5	Seed Bed Preparation												
6	Fertilization & Mulching												
7	Seeding & Planting												
8	Sediment Control Structure Removal *												

* The sediment pond will be removed at the completion of all other reclamation activities above the pond.

Notice in the table above that backfill and grading activities and seeding activities are occurring simultaneously. This will occur as work progresses down canyon. Seeding is planned for the fall season. Seeding will occur contemporaneously with backfilling and grading. Mulching, hydromulching, and tackifing will occur as successive processes. Access with mulching equipment will be achieved by the use of the reconstructed Emery County road #306.

Table 300-7: Rilda Canyon Portal Facilities Reclamation Schedule: 1st thru 10th Year

#	10 Year Revegetation & Monitoring	1st Year	2nd Year	3rd Year	4th Year	5th Year	6th Year	7th Year	8th Year	9th Year	10th Year
1	Plant Monitoring Disease & Pest Control *		✯	✯	✯	✯	✯	✯	✯	✯	✯
2	Soil Stabilization Rills & Gullies		✯	✯	✯	✯	✯	✯	✯	✯	✯
3	Contingent Seeding		✯		✯						
4	Revegetation Inventory for Bond Release				✯				✯	✯	✯

* Monitoring is conducted twice per year during the spring and fall.

Note: Reclamation of the Rilda Canyon Portal Facility was completed in June 2019.

Description of Revegetation Operations

Tables 300-8 through 300-10 are the vegetation seed mixes to be used during interim and final reclamation. Pinyon Juniper/Mountain brush habitats are those areas that have a high exposure to sunlight. These areas are typically drier and need grass growth early on for moisture retention and soil stabilization.

Table 300-8: Seed Mixture (Pinyon-Juniper/Mountain Brush)

Common Name	Scientific Name	Lbs/Acre Equivalent PLS*
Grasses		
Bluebunch Wheatgrass	Agropyron spicatum	2.0
Sandberg Bluegrass	Poa secunda	1.0
Great Basin Wild Rye	Leymus cinereus	2.0
Indian Ricegrass	Oryzopsis hymenoides var. Paloma	1.0
Western Wheatgrass	Agropyron smithii var. Rosanna	3.0
Forbes		
Blueleaf Aster	Aster glaucodes	0.25
Blue Flax	Linum lewisii	0.25
Louisiana Sage	Artemisia ludoviciana	0.2
Northern Sweetvetch	Hedysarum boreale	1.0
Palmer Penstemon	Penstemon palmeri	0.5
Shrubs		
Snowberry	Symphoricarpus oreophilus	0.5
Curleaf Mahogany	Cercocarpus ledifolius	1.0
Fourwing Saltbush	Atriplex canescens	2.0
Saskatoon Serviceberry	Amelanchier alnifolia	1.0
True Mountain Mahogany	Cercocarpus montanus	1.0

* Pure Live Seed

Table 300-9: Seed Mixture (Sagebrush/Grass)		
Common Name	**Scientific Name**	**Lbs/Acre Equivalent PLS***
Grasses		
Salina Wildrye	*Elymus salinus*	2.0
Needle and Thread Grass	*Stipa comata*	3.0
Sandberg Bluegrass	*Poa secunda*	2.0
Indian Ricegrass	*Oryzopsis hymenoides var. Paloma*	3.0
Western Wheatgrass	*Agropyron smithii var. Rosanna*	2.0
Forbes		
Blueleaf Aster	*Aster glaucodes*	0.5
Blue Flax	*Linum lewisii*	1.0
Louisiana Sage	*Artemisia ludoviciana*	0.2
Northern Sweetvetch	*Hedysarum boreale*	1.0
Palmer Penstemon	*Penstemon palmeri*	0.5
Shrubs		
Bitterbrush	*Purshia tridentate*	1.0
Fourwing Saltbush	Atriplex canescens	2.0
Snowberry	Symphoricarpos oreophilus	1.2

* Pure Live Seed

Table 300-10: Seed Mixture (White Fir/Aspen)		
Common Name	**Scientific Name**	**Lbs/Acre Equivalent PLS***
Grasses		
Bluebunch Wheatgrass	Agropyron spicatum	1.0
Indian Ricegrass	Oryzopisi hymenoides var. Paloma	2.0
Western Wheatgrass	Agropyron smithii var. Rosanna	3.0
Kentucky Bluegrass	Poa pretenses	1.0
Mountain Brome	Bromus marginatus	2.0
Slender Wheatgrass	Elymus trachycaulus ssp. trachycaulus	2.0
Forbs		
Louisiana Sage	Artemisia ludoviciana	0.2
Northern Sweetvetch	Hedysarum boreale	1.0
Pacific Aster	Aster chilensis	0.2
Rocky Mountain Penstemon	Penstemon strictus	1.0
Silky Lupine	Lupinus sericeus	1.0
Shrubs		
Snowberry	Symphoricarpos oreophilus	1.0
Saskatoon Serviceberry	Amelanchier alnifolia	0.5
Skunkbush Sumac	Rhus trilobata	0.5

* Pure Live Seed

Though several reference areas were designated and sampled, (see Volume 11 Appendix Volume - Biology: Appendix A), the disturbed area will only impact four vegetation communities. As indicated in the vegetation map, of this appendix, the sagebrush/grass seed mix will be used in the upper part of the disturbance. ~~The topsoil storage area will be seeded with the White Fir/Aspen seed mix (Table 300-10) for interim and final vegetation.~~ Disturbances to the White Fir/Aspen Community, near the Rilda Canyon stream, will be seeded with the White Fir/Aspen seed mix. All other areas will be seeded with the Pinyon-Juniper/Mountain Brush seed mix. Within the disturbed area is a small community of Douglas Fir/White Fir, approximately 0.25 acres. Because of the small size, this area will be seeded with the Pinyon-Juniper/Mountain Brush seed mix. This seed mix will be used for both the previously undisturbed (AMR/AML) and previously disturbed Pinyon Juniper (AML) areas.

No Riparian vegetation areas will be disturbed.

The soil store at the topsoil storage area was placed on the top surface of the regraded areas. No topsoil remains in this storage area. Emery County, through funding by the Natural Resource Conservation Service (NRCS), has plans for constructing sediment control and diversion structures over the entire area of the 0.51 acre topsoil storage site (refer to Volume 11, Appendix Volume, Hydrology, Appendix E for plans and designs). Therefore, no seeding was required in this area.

Note: The above reference seed mixes for the three habitat types were used at reclamation.

Seeding Techniques

Seeding ~~will take place~~ was conducted as contemporaneously as practical following soil placement and contouring/pocking of the area ~~being~~ reclaimed. Certified noxious weed free alfalfa hay ~~will be~~ was incorporated into the soil following contouring at a rate of 2000 lbs/acre. The mulch ~~will be~~ was applied using a tub grinder ~~or similar~~ and blower. Pocking techniques ~~will mix~~ mixed the alfalfa hay into the upper portion of the soil.

The seed mixture ~~will be~~ was broadcast ~~using a "hurricane spreader" or applied using a hydroseeder. If the seed mixture is hydroseeded, a small amount of wood fiber mulch will be added to mark the area of coverage during application~~ by hand.

After the seed ~~is~~ was applied, the entire area ~~will be~~ was hydromulched with a wood fiber ~~or other acceptable~~ mulch and applied at a rate of at least 1500 lbs./acre for cover and protection. A tackifier (plantago or other similar tackifier) ~~will be~~ was added to the mulch and applied at a rate ~~recommended by the manufacturer~~ of 500 lbs/acre. ~~Tackifier may only be used on slopes greater than 2:1.~~ Mulch and tackifier ~~will be~~ was applied simultaneously.

Measures to determine success of revegetation are those included in R645-301-350 of the Utah Coal Rules and as detailed later in this section.

R645-301-342 Fish and Wildlife

To minimize impact of the stream area and to make the operator aware of the presents of the stream, "Buffer Zone" signs will be placed along the stream side of the disturbed area.

To limit the impact on wildlife, the facility disturbance is located below the stream crossing at the forks of Rilda Canyon. Wildlife can continue to use the area for access from one fork to the other. ~~In addition, material haulage to the existing Rilda Canyon fan in the Left Fork will be discontinued. Materials will be hauled underground via the facility's portal.~~

Measures taken during reclamation and liability period to reduce impact to environment and wildlife:

1. Rock piles ~~will be~~ were formed to create habitat for small mammals.

2. ~~Vegetation~~ Deep pocking techniques were used to create micro-niches for vegetation to control and limit erosion.

3. Mulch and tackifier ~~will be~~ was used to promote vegetation and control and limit erosion.

R645-301-350 PERFORMANCE STANDARDS

Construction/reclamation activities will not take place between December 1st and April 15th.

Signs will be placed around the planted slopes for their protection. The area will be entered only to provide maintenance (as needed) and/or monitoring duties.

Standards for successful revegetation includes weed species not more than 10% and no noxious weeds. Weed control will not be undertaken unless it is determined necessary due to weed dominance and delayed rate of succession. All noxious weeds will be eradicated either chemically or physically if they become established on the site. Chemical applications will be approved by UDOGM in consultation with the Forest Service.

Rodent damage on revegetated areas will be assessed during monitoring periods. Species specific control measures will be implemented as necessary. Control measures must be approved by the Division in consultation with the Utah Division of Wildlife Resources prior to application.

Annual monitoring will also include inspection for rills and gullies. Should these be present, they will be filled and the soil reseeded. Rill and gully repair will follow the regulations set forth in the Coal Rules R645-301-357.360 through R645-301-357.365. As repairs are recognized, the Division will be notified and the affected area will be reported in the annual vegetation report.

All vegetation sampling will be undertaken in the late summer for maximum plant growth. The line intercept or ocular estimation methods will be used to measure cover and species composition. The point-center quarter method will be used to measure shrub and tree density.

Productivity measurements will be a double sampling procedure of clipped plots and ocular estimates. Rectangular plots (6.27 in. x 100 in.) will be randomly located in reference areas and revegetation sites. Sampling will be at the 90% confidence level.

The reference area will be checked to detect any change from natural or man-induced activities and to verify they are in fair or better condition. Sampling of the reference sites at the time of bond release will be conducted concurrently with final reclamation sampling, using the same methodology used to sample the reclaimed areas.

The standards for success to be applied for ground cover and production of living plants on the reclaimed areas at the Rilda Canyon Portal Facilities will be at least equal to 90% (with a 90% confidence level) to that of the corresponding reference area at the time of bond release. Cover in the reclaimed areas will not be less than that required to achieve the approved post-mining land use outlined in R645-301-400: Land Use and Air Quality.

At the time of bond release or after the 10 year responsibility period has passed, similarity between the reclaimed area and corresponding reference area will compare life forms and/or species present in each community by the use of similarity indices. Indices of similarity provide the means of mathematically comparing the plant communities in the two areas. One of, or a combination of the three indices found in the Vegetation Guidelines, February 1992, will be used to determine the

similarity between the reclaimed and reference area. If another index (or combination thereof) is used, Division approval will be required. Similarity will be considered successful when the index value is at least 70% of the reference area.

All vegetation monitoring data will be reported annually. This report will contain a narrative of the actual monitoring methods used, results, and a discussion of the overall success or failure of each area. Raw data sheets will also be included in the annual reports. Standards attained at the time of bond release will be approved by the Utah Division of Oil, Gas and Mining (UDOGM).

Note: In May 2019 all topsoil was removed from the pre-disturbed area of the topsoil storage site. Emery County, through funding by the Natural Resource Conservation Service (NRCS), has plans for constructing sediment control and diversion structures over the entire area of the 0.51 acre topsoil storage site (refer to Volume 11, Appendix Volume, Hydrology, Appendix E for plans and designs). These structures will protect the North Emery Water Users Special Services District (NEWUSSD) spring collection area from high sediment loaded storm water runoff generated as a result of the 2018 Trail Mountain Fire that burned the areas above the site. No salvaged soils will be used in this location nor will final reclamation be performed. Therefore, since meeting the vegetation standards will not be required for this area, the Utah Coal Rules do not require a 10 year responsibility period.

REFERENCES:

North Rilda Canyon Portal Facilities Area Vegetation Survey, 2004, Mt. Nebo Scientific, Inc.

Chambers, Jeanne C., Brown, Ray W., Methods for Vegetation Sampling and Analysis on Revegetated Mined Lands, Report INT-151, United States Department of Agriculture, Forest Service, October 1983.

Danielson, T.W.; Remillard, M.D.; Fuller, R.H., Hydrology of the Coal- Resource areas in the Upper Drainages of Huntington and Cottonwood Creeks, Central Utah; U.S. Geological Survey-Water Resource Investigations, Open-File Report 81-539.

Doelling, H.H., 1972, Wasatch Plateau Coal Fields, in Doelling, H.H. (ed.), Central Utah Coal Fields; Sevier-Sanpete, Wasatch Plateau, Book Cliffs and Emery, Utah Geological and Mineralogical Survey Monograph Series No. 3, Salt Lake City, Utah.

Walker, Craig A., Preliminary Report on Surveys Conducted to Determine Potential Impacts of Rilda Surface Facility Development in Rilda Canyon During 2004; Utah Department of Natural Resources, Division of Wildlife Resources, 1594 West North Temple, Suite 2110, Salt Lake City, Utah 84114.

Environmental Assessment, Designation of Critical Habitat for the Mexican Spotted Owl, January 2001, U.S. Fish and Wildlife Service, New Mexico Ecological Services Field Office, Albuquerque, New Mexico.

Wildlife Resources Report for the State of Utah School and Institutional Trust Lands Administration (SITLA) Access Route on East Mountain Project; USDA Forest Service, Intermountain Region,, Ferron/Price Ranger District, Manti-La Sal National Forest, Emery County, Utah, Re-re-revised July 2004.

PacifiCorp

Deer Creek Mine

C/015/0018

Volume 11 North Rilda Portal Facilities

Volume 11 – Land Use and Air Quality

Revise Entire Section

R645-301-400 LAND USE & AIR QUALITY SECTION

TABLE OF CONTENTS

R645-301-410 LAND USE 1

R645-301-411 ENVIRONMENTAL DESCRIPTION 1
R645-301-411.110 Maps 2
R645-301-411.140 Cultural and Historic Resources Information 2
R645-301-411.200 Previous Mining Activity 2
R645-301-412 RECLAMATION PLAN 3
R645-301-412.300 Suitability and Compatibility 4
R645-301-413 PERFORMANCE STANDARDS 4
R645-301-413.100 Postmining Land Use 5

R645-301-420 AIR QUALITY 5

R645-301-421 CLEAN AIR ACT 5
R645-301-422 UTAH DIVISION OF AIR QUALITY 5

REFERENCES: 6

MAPS

400-1 Historical Mine Workings in Rilda Canyon

R645-301-410 LAND USE

This document will include the general requirements to meet the State of Utah's regulatory requirements to mine coal in the North Rilda Area and operate surface facilities in Rilda Canyon as part of the Deer Creek Mine. This application includes descriptions of the premining and proposed postmining land uses

R645-301-411 Environmental Description

The North Rilda Area is geographically part of East Mountain, a plateau within the Wasatch Plateau. The area lies primarily between two major tributaries of Huntington Canyon -- Mill Fork Canyon and Rilda Canyon. Three vegetation types dominate the North Rilda Area. They are the mixed coniferous forests that occupy the north and northeast facing slopes (upper elevations), and the pinyon-juniper and mountain brush communities found on the drier south and southwest facing slopes. Elevations of the area range from 7,500 to 9,400 ft above sea level. For a map showing the North Rilda Area and its geographical surroundings as well as plant communities, see R645-301-300, Map 3-1.

Premining land use of the area was primarily livestock grazing, wildlife habitat and occasional timber cutting.

The USDA Forest Service has identified the following uses for the general area, including the North Rilda Area: big game winter range (Elk-critical, deer-high value), mining and mineral development, and general rangeland including timber and forage. Additional information about land use of the permit and adjacent area as a whole can be found in Vol. 1, Part 2 of the MRP.

At present, the area is used as wildlife habitat with some grazing permits issued by the USDA Forest Service. Deer and elk use the upper elevations of East Mountain for summer range, and the lower slopes and drainages for winter range.

Productivity of the pinyon-juniper communities of the area have been previously estimated at 100-325 lbs. per acre. Mixed conifer communities of the area have been estimated at 167-290 lbs. per acre (Refer to Volume 1, Part 2).

The Land Use Plan for the Wasatch Plateau designates no recreational development or timber sales on East Mountain but does specify improvements to big game range and the protection of watersheds. Private timber sales have taken place south of the North Rilda area.

An economic evaluation of timber resources was conducted by the USFS prior to any earthwork operations at the Rilda Canyon Portal Facility. PacifiCorp compensated the USFS for all saleable timber resources removed from this area as part of the facility construction.

R645-301-411.110 Maps

Maps showing the present permit area, adjacent area, and the North Rilda Area with respect to environmental description and land use are included in the MRP. Vol. 4, Map 1-2 shows the surface ownership information. Map 3-1 shows the vegetation communities of the area. Vol. 4, Map 2-16 is a general soils map that also shows the North Rilda Area. Vol. 4, Map 2-18A is a land use drawing. Vol. 4, Map 2-19 shows mule deer and elk habitat of the area.

R645-301-411.140 Cultural and Historic Resources Information

Archeological surveys have been conducted in the permit and adjacent areas within and contiguous to the North Rilda Area. The most recent survey was conducted in September of 2003, by John A. Senulis (SENCO-PHENIX). This survey report has been placed in the Division's Confidential File. Mr. Senulis summarizes his survey with this statement, "Neither the site nor any of the isolates are recommended for nomination to the National Register of Historic Places. No other cultural resources were located and the potential for undetected remains is remote. A finding of no effect is appropriate and archeological clearance without stipulations is recommended".

R645-301-411.200 Previous Mining Activity

The general area has a long history of coal mining. Small mining operations were located in several canyons within the Deer Creek permit area including: Deer Creek, Meetinghouse, Rilda, and Mill Fork canyons. A majority of the operations commenced in the early 1940's and terminated in the mid 1950's. Four abandoned mines are located in Section 28, Township 16 South, Range 7 East of the North Rilda Area, the Leroy (aka Comfort Mine), Jeppson, Rominger (aka Ferrell Mine), and Helco mines (refer to Map 4-1 for extent of historical workings). All of the mines are located in the Hiawatha seam and were reclaimed by AML in 1988. The Johnson Mine (Section 29, Township 16S, Range 7E) is located up canyon from the Rilda Canyon Portal Facilities but had no associated workings as documented in H.H. Doeling, 1972.

~~Current~~ Mining operations ~~are being conducted~~ have ceased at the Rilda Canyon Portal Facilities. Site demolition was completed in September 2018. Final reclamation was completed in June 2019. The Left Fork facility received Phase III Bond Release in January 2019. The Deer Creek mining operations were terminated in 2015 and those portals have been sealed and backfilled. Demolition of this facility was completed in December 2018. Final Reclamation commenced in February 2019 and is expected to be completed in October 2019 The Trail Mountain Mine was transferred to Bowie Resource Partners in August 2015 and final reclamation has been completed at the Cottonwood/Wilberg mine ~~is in temporary cessation as of mid-2001.~~ The mine was approved for Phase I Bond Release of all areas in May 2019. ~~The facilities were demolished in 2015 and final reclamation is expected to commence in 2017.~~ The Des Bee Dove mining complex was completely reclaimed in 2003. Phase III bond release for this mine was approved in February 2015.

R645-301-412 Reclamation Plan

In areas where surface disturbances result from coal mining and reclamation operations, regrading and revegetation will be conducted to restore the areas to their premining conditions which they were capable of supporting prior to mining. The disturbed footprint of the portal facility will be reclaimed to the original land use practices of grazing and wildlife habitats. The disturbed area at the topsoil storage site will not be reclaimed. Emery County is constructing sediment control and diversion structures on the entire 0.51 acre site for the protection of the NEWUSSD spring collection area as a result of the Trail Mountain fire in 2018. Once the facility is constructed, Phase III Bond Release will be sought by the PacifiCorp for this area.

A detailed reclamation plan has been developed for the Rilda Canyon Portal Facilities area and included in Section R645-301-200 thru R645-301-700 of this volume. The reclamation plan for the Left Fork Fan Facilities is found in Volume 2, Chapter R645-301-500: Engineering, Appendix R645-301-500-B. This site received Phase III Bond Release in January 2019.

R645-301-412.100 Post Mining Land Use Plan

Post mining land use of the Rilda Canyon Portal Facilities at the completion of final reclamation will be consistent with the pre-mining land uses. Previous uses include grazing and wildlife habitat with occasional timber cutting occurring in the area. Post mining land uses will included the equivalent grazing and wildlife habitat uses.

Additionally, it should be noted that a permanent mine water discharge pipeline will be installed in each of the two portals at the Rilda Canyon Portal Facility. A French drain system will be constructed behind a 25 foot solid concrete portal plug. The French drain system will collect and treat the expected mine water drainage from behind the portal plugs and route the collected mine discharge through a 10 inch (ID) HDPE buried pipeline through the existing disturbed area of the mine site. The pipeline will leave the disturbed area where it will be buried within the Emery County Road #306 and State Road 31 rights of way. The pipeline will be routed to the Huntington Power Plant take-up pond where the discharged water will be utilized for power generation. Refer to the Pipeline Plan Design in R645-301-500: Engineering Appendix I.

At the Huntington Power Plant a small disturbed area has been delineated. This area is being set aside for a water treatment plant. This plant will only be built in the unlikely event that the discharge water cannot achieve water quality standards for discharging into the Huntington River. Currently, PacifiCorp is expecting the quality of the mine water discharge to initially be high in iron that will precipitate out when mixed with the atmosphere as an iron oxide (refer to the discussion of mine water in Volume 12: Hydrology. However, overtime PacifiCorp theorizes that within about 4 years, the iron from the mine water discharge will we depleted and quality levels will come into compliance with water quality standards. At this point the mine water discharge will be

diverted into the Huntington River through an approved UPDES discharge point. ~~Current land use practices at the off-site disturbed area includes grazing, wildlife, and industrial.~~

Further, since the 2018 Trail Mountain fire that destroyed the forest lands surrounding the Rilda Canyon portal facility and topsoil pile storage area, Emery County, through funding by the Natural Resource Conservation Service (NRCS), has plans for constructing sediment control and diversion structures over the area of the 0.51 acre topsoil storage area (refer to Volume 11, Appendix Volume, Hydrology, Appendix E for plans and designs). These structures will protect the North Emery Water Users Special Services District (NEWUSSD) spring collection area as well as down stream fisheries from high sediment loaded storm water. The topsoil storage site will consist of a riprapped diversion that will direct runoff away from the spring collection area. A sediment basin will treat runoff water in the canyon above the site which will limit sediment for entering the stream segment. As a result of this protection measure, no salvaged soils will be used in this location and no vegetation will be planted. Therefore, success standards for vegetation will not apply. Current land practices within Rilda Canyon Portal Facilities area will be Fish and Wildlife Habitat, Grazing Land, and Industrial/Commerical uses as outlined in the Utah Coal Regulations.

R645-301-412.300 Suitability and Compatibility

The reclamation soil sampling will identify any soil that is not suitable. All unsuitable soils will be placed at least 4 feet below the final grade surface. This will ensure suitable growth material for vegetation. All fills will be graded at slopes compatible with the surrounding areas.

R645-301-413 Performance Standards

All disturbed areas (except the topsoil storage site: see note below) will be restored in a timely manner to conditions they were capable of supporting before mining. Liability will be for the duration of the coal mining and reclamation operations and for the period of extended responsibility for achieving successful revegetation. All post mining land use criteria will be satisfied before the bond is fully released.

Note: Note: In May 2019 all topsoil was removed from the pre-disturbed area of the topsoil storage site. Emery County, through funding by the Natural Resource Conservation Service (NRCS), has plans for constructing sediment control and diversion structures over the entire area of the 0.51 acre topsoil storage site (refer to Volume 11, Appendix Volume, Hydrology, Appendix E for plans and designs). These structures will protect the North Emery Water Users Special Services District (NEWUSSD) spring collection area from high sediment loaded storm water runoff generated as a result of the 2018 Trail Mountain Fire that burned the areas above the site. No salvaged soils will be used in this location nor will final reclamation be performed. Therefore, since meeting the vegetation standards will not be required for this area, the Utah Coal Rules do not require a 10 year responsibility period.

R645-301-413.100 Postmining Land Use

Reclamation of the small area of disturbance at the Rilda Canyon Portal Facility to comply with the post-mining land use will take place soon after closure of the facilities. Because of the small area needing to be reclaimed, the process can take place in one construction season. Vegetation performance standards (where applicable) will be met by comparison to undisturbed vegetation reference areas.

R645-301-420 AIR QUALITY

Air pollution control measures are described in the "Approval Order DAQE-AN0239003-02" issued by the Division of Air Quality (terminated March 2019). This order ~~has~~ had conditions that the operator must comply complied with to reduce emissions that ~~may~~ had the potential to affect the air quality. ~~Because processing or coal transport will not be conducted at the Rilda Canyon Portal Facilities, the controlled emissions will only include fugitive dust emissions. Those emissions will be controlled by typical dust suppressant measures.~~ The Division of Air Quality requires that the Approval Order be in place and complied with by the operator for the life of the facilities operation. Life of the operation ended in December 2017 with the closure of the Left Fork portals. Periodic inspections, by the Division of Air Quality, ~~are~~ were conducted at the site to verify compliance. ~~This air quality Approval Order is filed at the Energy West Mining offices in Huntington, Utah.~~

~~Some of the dust suppressant measures typically taken are: asphalt surfaces, wetting or sweeping of surfaces, restricted speeds for vehicular traffic, limitations for travel on service roads.~~

~~All areas adjacent to roads or travelways have been planted for revegetation. Reseeding is repeated until vegetation is adequately established. Revegetation has been applied on all disturbed surfaces and regraded areas.~~

R645-301-421 Clean Air Act

Coal mining and reclamation operations will be conducted in compliance with the requirements of the Clean Air Act (42 U.S.C. Sec. 7401 et seq.) and any other applicable Utah or federal statutes and regulations containing air quality standards.

R645-301-422 Utah Division of Air Quality

The operator has coordinated compliance efforts with the State of Utah, Division of Air Quality during the life of its air quality permit. The ~~current~~ Approval Order (AO) ~~issued to the operator is~~ DAQE-AN0239003-02 ~~and is dated June 14, 2002. Refer to R645-301-420~~ was terminated as of March 2019.

REFERENCES:

Doelling, H.H., 1972, Wasatch Plateau Coal Fields, in Doelling, H.H. (ed.), Central Utah Coal Fields; Sevier-Sanpete, Wasatch Plateau, Book Cliffs and Emery, Utah Geological and Mineralogical Survey Monograph Series No. 3, Salt Lake City, Utah.

PacifiCorp

Deer Creek Mine

C/015/0018

Volume 11 North Rilda Portal Facilities

Volume 11 – Engineering

Revise Entire Section

R645-301-500 ENGINEERING SECTION

TABLE OF CONTENTS

R645-301-510 INTRODUCTION....1

R645-301-511 GENERAL REQUIREMENTS....2
R645-301-512 CERTIFICATION....3
R645-301-513 COMPLIANCE WITH MSHA REGULATIONS AND MSHA APPROVALS....3
R645-301-514 INSPECTIONS....3

R645-301-520 OPERATION PLAN....4

R645-301-521 INTRODUCTION....4
R645-301-521.110 Previously Mined Areas....5
R645-301-521.122 Man Made Features....5
R645-301-521.123 Public Road....5
R645-301-521.124 Location of Existing Coal Waste....5
R645-301-521.130 Landowners and Right of Entry and Public Interest Maps....5
R645-301-521.140 Mine Maps and Permit Area Maps....6
R645-301-521.150 Land Surface Configuration Maps....6
R645-301-521.170 Transportation Facilities....8
R645-301-521.180 Support Facilities....8
R645-301-521.200 Signs and Markers Specifications....10
R645-301-522 COAL RECOVERY....11
R645-301-523 MINING METHODS....16
R645-301-524 BLASTING AND EXPLOSIVES....19
R645-301-524.100 Blaster Certification....19
R645-301-524.200 Blast Design....19
R645-301-524.300 Blast Survey....19
R645-301-524.400 Blast Schedule....20
R645-301-525 SUBSIDENCE CONTROL PLAN....20
R645-301-525.100 Subsidence Damage Probability Survey....20
R645-301-525.200 Protected Areas....21
R645-301-525.300 Subsidence Control....22
R645-301-525.400 Subsidence Monitoring Plan....23
R645-301-525.500 Repair of Damage....26
R645-301-525.700 Public Notice....27
R645-301-526 MINE FACILITIES....27
R645-301-526.116.1 Mining Within 100 Feet of Public Road....29
R645-301-526.116.2 Relocating a Public Road....30
R645-301-526.200 Utility Installation and Support Facilities....30
R645-301-527.100 Road Classification....31
R645-301-528.330 Non-Coal Waste....33
R645-301-529 MANAGEMENT OF MINE OPENINGS....33

R645-301-530 OPERATIONAL DESIGN CRITERIA AND PLANS....34

R645-301-531 GENERAL....34
R645-301-532 SEDIMENT CONTROL....35
R645-301-532.200 Stabilization....35
R645-301-533 IMPOUNDMENTS....35
R645-301-533.200 Foundations....35
R645-301-533.300 Side Slope Protection....36

R645-301-533.700 Plans *36*
R645-301-534 ROADS 36
R645-301-535 SPOIL 38
R645-301-536 COAL MINE WASTE 38
R645-301-537 REGRADED SLOPES 38

R645-301-540 RECLAMATION PLANS 38

R645-301-541 GENERAL 39
R645-301-541.300 Structure Removal *40*
R645-301-542 NARRATIVES, MAPS, AND PLANS 42
R645-301-542.600 Roads *42*

R645-301-550 RECLAMATION DESIGN CRITERIA AND PLANS 42

R645-301-551 CASING AND SEALING UNDERGROUND OPENINGS 42
R645-301-552 PERMANENT FEATURES 44
R645-301-553 BACKFILLING AND GRADING 44
R645-301-553.100 Disturbed Areas *46*
R645-301-553.130 Slope Stability Analysis *46*

R645-301-560 PERFORMANCE STANDARDS 47

MAPS

500-1	(1 of 3) Pre-Disturbance Topography (1"=300')
	(2 of 3) Pre-Disturbance Aerial Photo
	(3 of 3) Pre-Disturbance Topography (1"=100')
500-2	Sequence of Construction
500-3	(1 of 2) Surface Facilities
	(2 of 2) As-Built Operations Aerial
500-4	(1 of 4) Facilities Cross-Sections
	(2 of 4) Facilities Cross-Sections
	(3 of 4) Topsoil Storage Cross-Sections
	(4 of 4) Sediment Pond Cross-Sections
500-5	(1 of 2) Final Reclamation Topography (Planned)
	(2 of 2) Post Reclamation Aerial

FIGURES

Figure R645-301-500a	Typical Main Entry and Panel Development
Figure R645-301-500b	Typical Longwall Panel Retreat
Figure R645-301-500c	Emery County Road #306 Through Rilda Canyon Facilities Area
Figure R645-301-500d	Concrete Plug Detail

LIST OF APPENDICES (Refer to Volume 11: Appendix Volume)

Appendix A	Ground Stability Analysis: 4/5th North Mains Crossing of the Right Fork of Rilda Canyon
Appendix B	Correspondence Letters / Agreements / Approvals
Appendix C	Environmental Assessment for Deer Creek Mine North Rilda Extension
Appendix D	Decision Notice and Finding of No Significant Impact
Appendix E	DOGM Letter - Consent to Conduct Mining
Appendix F	North Rilda Canyon Facilities Geotechnical Investigation
Appendix G	Rilda Canyon Road - Change Order #1 (Emery County Road Design) Rilda Canyon Facilities Site Photos
Appendix H	Design Drawings – Rilda Canyon Facilities Phase I, 2006
Appendix I	Design Drawings and Technical Specs– Deer Creek Mine Water Relief Pipeline 2016 – Rilda Canyon

Note: The Deer Creek Mine ceased production in January 2015. The southern portion of the mine was separated (by the construction of the 3rd North cross-cut 138 seals) from the Mill Fork Area and the portals at the Deer Creek Canyon facility. The ventilation portals at the 9th East breakouts were sealed and backfilled in April 2015. The 1st Right Fan was taken off-line in March 2015. The final sealing of the Rilda Canyon Right Fork portals consisted of first constructing a water drainage system inclusive of an in-mine collection gallery together with the construction and permanent placement of a buried water pipeline (10" HDPE pipe) from the Rilda Canyon Right Fork portal to the Huntington Power Plant raw water pond (approximately 6 miles). This pipeline project was completed in November 2017. The final Rilda Canyon portal sealings consisted of two 25-foot thick concrete portal plugs with water drains, one each in the 1st Right facility fan and roadway portals that were constructed on November 8 and 10, 2017, and high strength Strata panel portal seals, one each in the Left Fork facility fan and roadway portals completed on December 18 and December 20, 2017. The portal seals were constructed to meet or exceed regulatory requirements of 30 CFR 75.1711. (Phase III Bond Release for the Left Fork Portal Facilities was approved on January 29, 2019.)

All information pertaining to the operations of the mine, coal recovery, mining methods, and subsidence control (sections R645-301-510, -511, -512, -513, -514, -515, -520, -521, -522, -523, -524, -525, -526, -527, -528, and -529) have been retained for a historic reference.

Sections -530 – -540 have been updated to include changes that have occurred as a result of the Trail Mountain Fire in June, 2018 and full reclamation of the site completed in June 2019. These changes include third-party interference issues within the Rilda Canyon Portal Facilities permit disturbed area that will result in changes to the disturbed area boundary.

R645-301-510 INTRODUCTION

The Engineering Section provided within this permit application contains general descriptions, information, and design criteria for both operation and reclamation of the facilities associated with the North Rilda Area and Mill Fork Area mining operations. Most plans, maps and designs for the North Rilda Area operations (Left Fork Fan Facilities) can be found in Volume 2 of the Deer Creek Mining and Reclamation Plan (MRP). A portion of these facilities are detailed below. All plans, maps and designs associated with the Mill Fork Area operations (Rilda Canyon Portal Facilities) are detailed in the following sections. In general, the Left Fork Fan Facilities will be discussed first followed by the Rilda Canyon Portal Facilities.

Coal mining has occurred since 1946 in Deer Creek Canyon, a tributary of Huntington Canyon in Emery County, Utah. Utah Power & Light Company (now PacifiCorp) purchased the operations and coal leases from Peabody Coal Company in 1977. The Deer Creek Mine portal, mine personnel, and its coal handling facilities are located in Deer Creek Canyon.

Mining in the North Rilda Area produced coal from both the Blind Canyon and Hiawatha coal seams. Approximately 23 million tons of minable coal was mined from the North Rilda Area during the past few years. A portion of the North Rilda Area will be used to provide access from the Rilda portals to the Mill Fork Lease area. Refer to Volume 5, Plates 3-6, Life of Mine Plan /

5 Year Increments - Blind Canyon Seam, and 3-7, Life of Mine Plan / 5 Year Increments - Hiawatha Seam.

Because of the need to expand the mining operations to the northwest (Mill Fork State Lease #48258), surface facilities are required in Rilda Canyon. This includes construction of the mine entries, facilities pad, fan, ancillary facilities, sediment control structures, and soil storage piles. No coal processing or coal transportation facilities will be utilized at these facilities. All mined coal from the extended Deer Creek Mine will continue to be transported through the Deer Creek Canyon portals and processed at these facilities. The processed coal is then transported via beltline to the Huntington Power Plant. The Huntington Power Plant is owned and operated by PacifiCorp.

A variety of engineering principles and techniques are applied in the Deer Creek Mine operation. Principles of engineering employed are those associated with standard prudent mine engineering practices. More detail about the methodologies used to plan the coal mining activities for long-range goals at the Deer Creek Mine and the use of computer assisted models can be found in Volume 2, Part 3 of the MRP.

R645-301-511 General Requirements

This document includes the general requirements to meet the State of Utah's regulatory requirements to mine coal in the North Rilda Area and operate surface facilities in Rilda Canyon as part of the Deer Creek Mine. The surface facility operation plan includes information or references the existing mine plan when appropriate. The potential impact to the environment is also addressed. As reflected by its format, much of the current Deer Creek MRP was written prior to the State's R645- Rules. This plan attempts to follow the Rules general format, yet allow it to also be consistent with the existing MRP.

Rilda Canyon Portal Facilities and Operations: Early mining operations, prior to PacifiCorp's presence in the canyon, occurred near the surface facilities (see Map 400-1). These operations include the Rominger (Ferrell) Mine, Jeppson Mine, Leroy (Comfort) Mine, and Helco Mine (refer to site photos A through C in Volume 11 Appendix Volume - Engineering: Appendix G). These mines were active during the 1940's and early 1950's. Abandoned Mine Lands (AML) reclaimed these mines in 1988. Much of the the disturbed surface area of the Rilda Canyon facilities occurs west of the Leroy, Rominger, and Jeppson mines disturbed area. However, a portion of the disturbance, namely the sediment pond (Leroy mine site) and topsoil storage (Helco mine site) occurs in these previously disturbed areas.

Surface facilities in Rilda Canyon include the existing mine fan, substation and water supply in the Left Fork of the canyon, and surface related facilities associated with the Rilda Canyon Portal Facilities. These facilities include (but not limited to) access and mine fan portals, exhaust fan, facilities pad, fuel dock, rock dust tank, sediment pond, sediment basin, waste and waste rock storage bins, substation, MCC building, drainage systems, and covered storage buildings. Refer to Section R645-301-521 for a detailed description of all surface facilities of the Rilda Canyon Portal Facilities. Also refer to Volume 12 of the Deer Creek MRP for

detailed information of the mining plan, mining production, and mining methods that will be utilized within the Mill Fork Lease.

R645-301-512 Certification

Applicable cross sections and maps have been included or referenced within this document. They have been prepared by, or under the direction of, and certified by a qualified, registered, professional engineer, geologist, or land surveyor, with assistance from experts in related fields such as hydrology, geology, and biology.

R645-301-513 Compliance with MSHA Regulations and MSHA Approvals

All structures that are constructed to allow mining in the North Rilda Area and the Mill Fork Lease will comply with all regulations, whether at the local, State, or Federal level.

There are no impoundments or sedimentation ponds that meet size or other qualifying criteria of MSHA, 30 CFR Part 77. All impoundments or sedimentation ponds utilized by operations in Rilda Canyon meet the requirements outlined in the Utah Coal Regulations.

Underground development waste, coal processing waste and excess spoil will continue to be disposed of in accordance with plans approved by DOGM and MSHA. There are no plans to return coal processing wastes to the underground workings at Deer Creek Mine. All coal is shipped via beltline through the Deer Creek Canyon portals.

There are no plans to construct refuse piles within the facilities area in Rilda Canyon. All refuse that is transported through the Rilda Canyon portals is temporarily stored in a refuse bunker. As the bunker fills to capacity, the refuse is transported by truck to the Deer Creek waste rock site in Huntington Canyon for permanent storage.

Each shaft, drift, adit, tunnel, exploratory hole, entryway or other opening to the surface from underground will be capped, sealed, backfilled or otherwise properly managed consistent with MSHA, 30 CFR 75.1771. Refer to Section R645-301-550 Reclamation Design Criteria and Plans below.

PacifiCorp proposes to collect or divert storm water runoff from the mine facilities area (refer to R645-301-521-180 Support Facilities for details). Collected runoff is diverted through a series of ditches and pipes to the sediment basin. As this basin fills to capacity, runoff will over flow and divert to the sediment pond located in the Leroy Mine area. Undisturbed runoff is diverted around or under the facilities through ditches and pipes into the Rilda Creek.

R645-301-514 Inspections

All appropriate engineering inspections and reports will be conducted by a qualified registered professional engineer or other qualified professional specialist under the direction of the professional engineer during the construction, operation, and reclamation activities of mining.

R645-301-515 Reporting and Emergency Procedures

In the event any potential hazard exists, develops, or occurs in association with slides and/or impoundment structures which may have an adverse effect on the health and safety of the public, property, or the environment, DOGM will be promptly notified. The operator commits to comply with any remedial measures required to protect and ensure the health and safety of the public.

The Deer Creek Mine facility conducts routine inspections on a weekly basis. Should a hazard exist or occur, personnel have been instructed to notify the Mine Manager, who will coordinate and implement any emergency procedures and remedial measures to be taken.

Where temporary cessation of operations is necessary for a period beyond 30 days, the applicant will submit the proper notification and information required of R645-301-515.300 to DOGM.

R645-301-520 OPERATION PLAN

R645-301-521 Introduction

The plan for the mining in the North Rilda Area includes or references maps, cross sections, narratives, descriptions, and calculations indicating how the relevant requirements are met. The plan describes and identifies the lands subject to coal mining and reclamation activities over the estimated life of the operations and describes the size, sequence, and timing of the sub-areas for which it is anticipated that individual permits for mining will be sought. For review of the mining plan of the Mill Fork Lease area, refer to Volume 12, Mill Fork Lease, ML-48258.

R645-301-521.110 Previously Mined Areas

Areas previously mined in the Rilda Area are presented on Map 500-1, Pre-Disturbance Topography, in the Maps Section. These areas include the Leroy Mine, Rominger Mine, Jeppson Mine, and Helco Mine. Mining occurred in these mines in the 1940's and 1950's. Abandoned Mine Lands reclaimed these sites in 1988. Extents of mine workings of the said mines are included on Map 500-1. Photos of all previously mined areas in Rilda Canyon area illustrated in Volume 11 Appendix Volume - Engineering: Appendix G. All openings have been backfilled by AML during reclamation activities.

R645-301-521.122 Man Made Features

Rocky Mountain Power owns and operates a 25 KV electrical power transmission line that supplies electrical power to the Left Fork fan facilities. This line (refer to Map 500-3), prior to construction, was located on the north side of EC#306. This transmission line required relocation to south side of the then proposed Rilda Canyon Portal Facilities. Energy West West (now Interwest Mining Company) coordinated with Rocky Mountain Power to establish a new right of way for the transmission line and completed this relocation activity in May 2005.

Water wells exist in Rilda Canyon near the disturbed area boundary. These wells were developed in 1989 to evaluate the hydrologic characteristics of the alluvium for the North Emery Water Users Special Service District's spring collection system (also adjacent to the disturbed area boundary). The wells were drilled through the alluvium to bedrock. Monthly monitoring (level only) is conducted on the wells. Refer to Map 500-3 for location. Refer to Volume 9 for complete discussion. Refer to photo's D through F in Volume 11 Appendix Volume - Engineering: Appendix G.

R645-301-521.123 Public Road

Emery County Road #306 runs approximately 3.0 miles from the Huntington Canyon road, Highway 31, to the turnaround area in the Left Fork of Rilda Canyon. A portion of this road is located within the disturbed area boundary of the Rilda Canyon Portal Facilities (refer to maps 500-1, 500-3, and Figure R645-301-500c). Energy West (now Interwest Mining Company) has worked with Emery County Special Services District #1 (ECSSD#1) and the Emery County Commission to develop an agreement to suspend public use of that portion of EC#306 that runs through the facilities area. This agreement is located in Volume 11 Appendix Volume - Engineering: Appendix B. Refer to Volume 11 Appendix Volume - Engineering: Appendix G for photos of the suspended portion of the road.

R645-301-521.124 Location of Existing Coal Waste

As mentioned above, previous mining occurred in Rilda Canyon at the Leroy Mine, Rominger Mine, Jeppson Mine, and Helco Mine. Map 500-1 shows predisturbed areas associated with these mines. At reclamation of these mines, coal waste material was buried on-site. It is not known to what extent or volume waste coal is buried throughout the area.

R645-301-521.130 Landowners and Right of Entry and Public Interest Maps

Refer to Supplemental Volume (Legal and Financial Information) for description of lands containing surface and subsurface ownership. Refer to Volume 4 Maps 1-1 and 1-2 for locations of ownership.

R645-301-521.140 Mine Maps and Permit Area Maps

The boundaries of the North Rilda Area to be affected for the life of coal mining and reclamation activities are found on Map DU1688 in Volume 11 Appendix Volume - Engineering: Appendix A. Refer to Volume 12, Mill Fork Lease ML-48258 to review all proposed affected areas and discussion of subsidence in the Mill Fork Lease. Subsidence for the North Rilda Area is discussed below in R645-301-525.

R645-301-521.150 Land Surface Configuration Maps

Map 500-1 illustrates the topography prior to construction of the Rilda Canyon Portal Facilities. Contours extend at least 100 feet beyond the area of each disturbance.

R645-301-521.160 Maps and Cross Sections for the Constructed Features

Typical construction sequencing is presented on Map 500-2 in the Maps Section. This map shows the construction sequences that have been used to construct the facilities. Plan views of the existing land surface configuration for the coal mining and reclamation operations in the North Rilda Area are found on maps 500-3. Map 500-3 shows a plan view of the existing disturbance for the 6.77 acre mine facility site as well as the location of the topsoil storage area~~s~~. The as-built design for the topsoil pile shows a fenced area of approximately 0.51 acres. The total volume of the pile is approximately 7,862 cubic yards (5,725 cubic yard topsoil and 2,137 cubic yard of substitute topsoil. Refer to the table in ***R645-301-232 Topsoil and Subsoil Removal*** for soil pile capacity.

The facilities pad was developed by cutting and/or filling the surface to create an earthen structure that supports the buildings and storage areas. The facilities pad was cut to the bedrock on the north side of the pad. This bedrock stretches the entire length of the disturbed area boundary and is nearly vertical. The mass balance Table 500-1 below illustrates the cuts and fills required for constructing the facility pad and sedimentation pond. Maps 500-4, 1 of 4 and 2 of 4 show the cross-sections through the facilities area. Map 500-4, 3 of 4 shows the cross-sections through the topsoil pile. Map 500-4, 4 of 4 shows the cross-sections through the sediment pond. Cross-sections are spaced on 50 foot centers and are identified by interval and distance from the starting point (i.e. 15+00, 15+50, etc.). Carlson Software was utilized to calculate the total volumes of cuts and fills. However, as indicated in Table 500-1, there are instances (i.e. coal material removed from the site, void in boulder fills, etc.) that cause inaccuracies of the cut and fill volumes. As shown in the table, those inaccuracies are accounted for and volumes have been adjusted accordingly.

Table 500-1: As-Built Mass Balance for Rilda Portal Facilities

		Area (sf)	Volume (cy)
Faclilities/Pond Area			
1	Total Cut		41,284
2	Total Fill**		29,522

Topsoil Pile			
3	Total Cut		-
4	Total Fill***		7,862
Concrete Volume** (removed at reclamation)**			
5	Concrete Pad (Avg. 9" thick)	69,650	1,935
6	Fan Pad (Avg. 5' thick)	6,000	1,111
7	MCC Building (4' crawl space under building)	400	59
8	Total Volume to be Reduced from Item 2		3,105
Hard Armor Areas*****			
9	Hilfiker Wall	8,400	249
10	Boulder Pile	20,350	603
11	Sediment Basin Outslope	4,020	119
12	Sediment Pond Outslope	4,375	130
13	Total Volume to be Reduced from Item 2		1,101
Coal/Coal Waste Removed from Area			
14	Coal		290
15	Coal Waste		2,000
16	Total Volume to be Reduced from Item 2		2,290
Culverted Areas (Voids caused by buried culverts)			
17	UC-1: Area = 1.77 ft^2, Length = 72 ft.	1.77	127
18	UC-2: Area = 1.77 ft^2, Length = 148 ft	1.77	262
19	DC-1: Area = 1.77 ft^2, Length = 391 ft.	1.77	692
20	DC-2: Area = 1.77 ft^2, Length = 198 ft.	1.77	350
21	Portion DC-3: Area = 1.77 ft^2, Length = 142 ft.	1.77	251
22	Total Volume to be Reduced from Item 2		1,683
Mass Balance Calculations			
	Total Cut Items(1-(4+8+13+16+22)		25,396
	Total Fill (Item 2)		26,373
	Difference		(977)
	% Difference		-4%

NOTES:

* As-built volumes calculated utilizing aerial survey data and Carlson Software.

** Includes approximately 18,100 cy of imported rock material for construction of Hilfiker wall.

*** Includes both topsoil quantities (approx. 5,725 cy) and substitute topsoil quantities (approx. 2,137 cy) that is segregated and stored at the topsoil pile storage location (Map 500-3). These volumes were hand surveyed in the field. Item 4 was calculated using Carlson Software.

**** Carlson Software calculates volumes according to surface elevations. Concrete is, therefore, part of the cut/fill volumes and must be subtracted from total cut (Item 1).

***** Boulders excavated during construction were utilized as a hard armor BMP or stored. When calculating the cut/fill volumes, voids in the boulders are not considered. For estimation purposes, a 40% void volume is subtracted from the total cut volume for a depth of 2 feet.

****** This difference is probably the result of the importation of fill specified for construction.

Cross-sections associated with the stations on Map 500-3 are shown on Map 500-4. These cross-sections illustrate pre-existing contours, post-construction contours, and reclamation contours. The Carlson Software data is shown on Map 500-3. Reclamation of the facilities is discussed later in this chapter.

Constructed buildings and facilities are shown on Map 500-3. These constructed facilities have been included in the performance bond calculations. Refer to R645-301-800: Bonding, for detailed information.

R645-301-521.170 Transportation Facilities
Primary and secondary roads are described in detail in Section R645-301-527.

R645-301-521.180 Support Facilities
As-built drawings of the Rilda Canyon Portal Facilities are found in Volume 11, Appendix Volume 11A - Engineering, Appendix H. Surface facilities in Rilda Canyon are located at two locations; 1) Left Fork of Rilda Canyon and 2) at the forks of Rilda Canyon.

Left Fork of Rilda Canyon: This facility includes an access road and a pad area which supports two portals, a substation, power line, fan, water storage tank, and pumphouse. Topsoil removed prior to construction of the site is also stored within the permit area of the Left Fork Rilda Canyon fan facilities. Additional information about this facility is provided in Volume 2, Part 3 and Volume 5, Map 3-9A and Map 3-9B.

Rilda Canyon Portal Facilities: This facility is located at the forks of Rilda Canyon and includes the following: Access and Mine Fan Portals, Mine Fan, Facilities Pad, Fuel Dock, Rock Dust Tank, Waste, Rock and Waste Rock Storage Bins, Covered Storage Buildings, Substation, Lift Station, Sediment Basin, Sediment Pond, and Drainage Systems (see Map 500-3 in this chapter). A short discussion of each facility is presented below:

Access and Mine Fan Portals: During the development of the Rilda Canyon Portal Facilities two separate surface breakouts were constructed; 1) Mine (Intake) Access, and 2) Blowing Mine Fan opening. Both portals were developed [from underground] as rocks slopes through the upper member of the Star Point Sandstone (Spring Canyon Member) from the portal facility area to an interception point in the Hiawatha Coal Seam. Methods used to construct this portal and tunneled slope utilized conventional drill and shoot methods. The dimensions of the portal are approximately 20' x 9' rectangular opening. The fan is constructed at the west portal. Mine equipment and men will use the east portal to access the northwestern part of the Deer Creek Mine.

Mine Ventilation Fan: - The fan installation at the Rilda Canyon portal facility is a dual, parallel fan arrangement. The fans are located side-by-side on concrete foundation. The fans are installed in a blowing configuration, taking in outside air and forcing it into the mine. Only one fan will operate at a time. Each fan is driven by an electrical motor. Back-up power is supplied by a diesel generator north of the fan. The motors are housed in steel frame buildings.

Facilities Pad: The facilities pad is constructed utilizing Hilfiker MSE (mechanically stabilized embankment) wall system on the south side of the pad. The fill material with the pad consists of existing subsoil material and imported granular fill (approximately 18,100 cy). The pad is lined with a welded impermeable geofabric membrane and topped with 9" concrete. All precipitation that intercepts the pad is collected through a single drop inlet and piped to the sediment basin. Refer to Map 500-3 and 700-2 for this drainage control location.

Fuel Dock: The fuel dock facility is located near the roadway access on the south side of the pad. This covered and self-contained facility contains two steel storage tanks; 2,500 gallon diesel tank and a 2,500 gallon emulsion tank.

Rock Dust Tank: A 140 ton capacity steel rock dust silo is located on the north side of pad. The silo is mounted on a concrete foundation. Rock dust is pumped into specially equipped rock dust trailers or trucks.

Lift Station: The lift station is a device that allows longwall equipment to be loaded and unloaded from flat-bed trailers. The lift station is located on the south side of the pad next to the fuel dock.

Sediment Basin: The sediment basin is located east of the rock storage area. This structure collects runoff from the facilities pad and road access areas. The basin is equipped with an open riser extending vertically. The riser allows any silt laden runoff to impound behind its embankment. Excess runoff will be conveyed via a 20 inch High Density Polyethelene pipeline to the sediment pond.

Sediment Pond: The Rilda Canyon Facilities include construction of a single sedimentation pond located at the eastern extent of the disturbed area. Analysis utilized to determine the size and hydraulics related to the construction and operation of the sedimentation pond and all supporting drainage structures are included in the Drainage and Sediment Control Plan (refer to Volume 11 Appendix Volume - Hydrology: Appendix B). Note that prior to any construction, temporary sediment control was established to protect the Rilda Canyon creek from additional contributions of sediment. These plans are outlined in the above referenced material.

Waste, Rock, and Waste Rock Storage Bins: The storage bins are located on the east end of the facility pad and are used for bulk storage of rock used in the mine, as well as, a temporary storage for garbage and waste rock material produced from mining operations. The bins are constructed of rebar reinforced concrete. The waste bin encloses a portable steel dumpster that is covered by netting which keeps litter from blowing away in windy conditions.

Covered Storage Bins: There are six covered storage bins throughout the facilities pad area. These bins are utilized to store materials and supplies which will be used as part of the mining operations. The bins are constructed of 6" box beam steel and covered on three sides. Refer to Map 500-3 for the location of these structures.

Substation: Power is supplied to the Rilda Canyon facilities via a 25KV utility service line which parallels the south side of the facility pad. The substation splits the power service into various supply lines and powers the surface operations on the pad. This facility occupies approximately 2,150ft^2 and is completely enclosed by a 7' chain link fence.

A reclosure switch platform is constructed within the existing powerline corridor that allows personnel to trouble shoot power failures before reapplying power back to the Rilda Left and Right Fork Sub-stations. The reclosure switch protects the substations and other electrical installations from automatic re-closing of incoming power from the Power Company. The platform is constructed of steel and extends from the edge of the facilities pad to an area near the power pole where the reclosure switch is installed. All design and construction processes comply with OSHA and NEC safety standards for platform and electrical installations.

Drainage Systems: Two separate drainage systems are utilized at the Rilda Canyon Portal Facility site and classified as either "undisturbed" or "disturbed". The "undisturbed" system collects water above the facility pad and from side slopes adjacent to the site and conveys it past the disturbed area into the natural channel of Rilda Canyon Creek.

The "disturbed" collection system collects runoff from facilities pad and storage areas and conveys it to the sedimentation basin. This system consists of concrete catch basins, CMP culverts and opened ditches designed to adequately collect and pass the peak flow from a 10yr/6hr precipitation event. Refer to Volume 11 Appendix Volume - Hydrology: Appendix B for detailed design and Maps 500-3 and 700-2 for locations.

R645-301-521.200 Signs and Markers Specifications

Permit area identification signs are placed and maintained at each point of access from public roads. Signs identify the business name, address, telephone number, and DOGM identification number of the Deer Creek Mine.

Perimeter markers are placed around all disturbed areas of the Rilda Canyon portal facilities and Left Fork Rilda Canyon fan facilities. Perimeter signs are placed at a reasonable sight distance from one another.

Areas along the Rilda Canyon perennial stream (within 100 feet of the disturbed area of the Rilda Canyon Portal Facilities) are considered a buffer zone and are appropriately posted as such.

The topsoil area is appropriately posted to identify this location. A silt fence, ditch or other appropriate control structure is used to prevent topsoil erosion from the site. Refer to Volume 11 Appendix Volume - Hydrology: Appendix B for a complete description of the Alternative Sediment Control Areas (ASCA's).

R645-301-522 Coal Recovery

This section includes a description of the mine plan and measures used to maximize the use and conservation of the coal resource. The description attempts to show that coal mining and reclamation operations are conducted to maximize the utilization and conservation of the coal, while utilizing the best technology currently available to maintain environmental integrity. This decreases the likelihood of re-affecting the land in the future through coal mining and reclamation operations. Coal Recovery in the Mill Fork area is included in Volume 12, Mill Fork Lease, ML-48258 of the Deer Creek MRP.

Mine Plan: Access to the to North Rilda reserves was achieved with the use of 5-entry set of mains referred to as 4th North Mains. The 4th North Mains are developed northwest (approximately 4000 feet) from the 4th North / 10th West Mains intersection. Mainline development, designated as 5th North, then changed course to a northeast bearing, with development proceeding under the Right Fork area of Rilda Canyon. Selection of the Right Fork stream crossing area was based on the results of an extensive surface exploration program conducted in the Right Fork of Rilda Canyon (refer to Volume 9 maps HM-9, HM-10 and HM-12). A series of six drill holes were completed in 1997 to document coal seam characteristics, structural geology and hydrologic conditions. Drilling was conducted on approximately 250 foot centers across the projected Mill Fork Graben from previously completed drill holes EM-158 and EM-56. No structural discontinuities were identified during drilling. Groundwater encountered during drilling was restricted to minor quantities from the alluvium/colluvial fill (estimated at 2 - 5 GPM) near the bedrock interface. Based upon the results of the surface exploration program, mining below the Right Fork of Rilda Canyon was re-located approximately 800 feet to the west of the original projection. Re-location of the mains to the west increased the overburden from approximately 120 to 200 feet.

Based on the information gained from the surface exploration program, a detailed plan was developed to position the 4th North/5th North intersection to optimize the "no-subsidence" design of the 5th North / Rilda Canyon Right Fork crossing route and rock slope access into the lower Hiawatha Seam as well as maximizing overall reserve recovery within the area.

From the 4th North/5th North intersection, mainline development proceeded to the northern boundary of Federal Coal Lease U-024317. Longwall gateroad development sections were driven due east from the 5th North Mains to the extent of mineable reserves. Six longwall panels were completed in the Blind Canyon Seam, and six longwall panels were completed in

the Hiawatha Seam. Sequences of longwall panels extracted in the Blind Canyon Seam were as follows:

Blind Canyon Seam:

Longwall Panel	Coal Lease
11th East	Federal Leases U-06039
	U-024317
	PacifiCorp patent fee claims
12th East	Federal Leases U-06039
	U-024317
	PacifiCorp patent fee claims
14th East	Federal Leases U-06039
	U-024317
	PacifiCorp patent fee claims
15th East	Federal Leases U-024317
9th East	Federal Leases U-06039
	U-024317
	SL-051221
	U-2810
	PacifiCorp patent fee claims
8th East	Federal Leases U-06039
	SL-051221

Hiawatha Seam Access: Access to the to North Rilda Hiawatha seam reserves was achieved with development of rock slopes and vertical raises from the Blind Canyon seam to the Hiawatha seam. From the bottom of the slopes, a 5-entry set of mains referred to as 6th North Mains were developed to the northeast for access to gateroad development in the Hiawatha seam. Main line development was reduced to three entries above 6th Right. The sequences of longwall extracted in the Hiawatha Seam were as follows:

Hiawatha Seam:

Longwall Panel	Coal Lease
5th Right	Federal Leases U-06039
	U-024317
	PacifiCorp patent fee claims
4th Right	Federal Leases U-06039
	U-024317
	PacifiCorp patent fee claims
3rd Right	Federal Leases U-06039
	U-024317
	SL-051221
	U-2810
	PacifiCorp patent fee claims
2nd Right	Federal Leases U-06039
	SL-051221
7th Right	Federal Leases U-06039
	U-024317
8th Right	Federal Leases U-06039
	U-024317

Longwall mining on North Rilda Ridge was completed during August 2004. As indicated above, a total of six panels were extracted in each seam.

Mill Fork Federal Lease (Formerly State Lease ML-48258) Access: Based on data acquired through surface coal exploration programs, Energy West West (now Interwest Mining Company) developed a mine plan to access the Mill Fork State Lease with a set of 6-entry mains driven on a northwest bearing from the 6th North Mains. Mining within the Mill Fork Access corridor was restricted to mainline development. To ensure long term stability, pillars will not be removed (refer to Volume 5 Map 3-7).

Rilda Canyon Portal Facility Access: Based on data acquired through in-mine directional drilling program, Energy West (now Interwest Mining Company) developed a mine plan to access the Rilda Canyon Portal Facility area by extending the 1st Right submains with a set of four entry submains driven southeast toward the Hiawatha coal outcrop near the fork of the Rilda Canyon. Near the Hiawatha outcrop, however, the in-mine directional drilling located a burn area that affects approximately 250 feet of outcrop coal. The intake and travelway breakouts were accomplished by driving a pair of rock slopes to the outside below the burned coal area of the seam. The slope was constructed at the elevation of the mine facilities pad and sloped upward at approximately 8% for approximately 500 feet to intersect the Hiawatha coal seam. The dimensions of the portals are approximately 20' x 9' rectangular opening. Mine equipment currently utilizes the access portal for material supply of underground mining operations. Mine equipment will be transported through the portal to access the northwestern (Mill Fork) reserves of the Deer Creek Mine.

Two northern and two southern panels of each seam extended below the Castlegate Sandstone escarpment. As specified in the lease stipulations, "except at specifically approved locations, the Castlegate escarpment must be protected from mining induced failure". Due to the limited surface exposure of the Castlegate Escarpment, no special monitoring of environmental assessment was deemed necessary for the northern panels. An environmental analysis for full extraction longwall mining beneath the Castlegate Sandstone escarpment has been completed for the two southern panels with an accompanying Decision Notice/FONSI signed (Volume 11 Appendix Volume - Engineering: Appendix C and D). The environmental analysis assessed the following:

a. How much escarpment could fail based on analytical methods, observation of similar areas, geologic/topographic conditions, and panel orientation.

b. What resources would be affected by escarpment failure and description of the nature and magnitude of these effects, ie: vegetation; wildlife and habitat; threatened/endangered and sensitive species; cultural and paleontological resources; hazards; visual quality; etc.

The Castlegate Sandstone escarpment within the North Rilda Permit Application area has been defined in the permit application in two (2) distinct portions:

- *NORTH CASTLEGATE ESCARPMENT - NORTH RILDA AREA*
- *SOUTH CASTLEGATE ESCARPMENT - NORTH RILDA AREA*

North Castlegate Escarpment: The Castlegate Sandstone escarpment within the northern portion of the North Rilda Area (north face of the ridge) has very limited surface exposure due to the presence of talus slopes and forest vegetation which cover most of the escarpment in this area. Due to the limited surface exposure of the Castlegate escarpment, no special monitoring or mine layout protection is planned for the escarpment in this area, i.e.; the four (4) northernmost longwall panels in the Blind Canyon and Hiawatha Seams - North Rilda Area, refer to Volume 11 Appendix Volume - Engineering: Appendix A for complete description and comparison of the North Castlegate Escarpment to previously mined areas.

South Castlegate Escarpment: The Castlegate Sandstone escarpment within the southern portion of the North Rilda Area (south face of ridge) has a prominent surface exposure. Based on an on-going geotechnical study evaluating the potential effects of longwall (full-extraction) mining on the stability of the Castlegate escarpment, i.e.; Cottonwood Newberry Canyon/Corncob Wash and Trail Mountain 5th East/Cottonwood Canyon Test Areas, on-going development of a predictive escarpment/mining model is in progress. The current model developed from these studies was used to forecast anticipated effects of proposed mining under the escarpment within the southern portion of the North Rilda Area, ie: The two (2) most southern longwall panels proposed in the Blind Canyon and Hiawatha Seams - North Rilda Area, refer to R645-301-500: Appendix A for complete description of the Geotechnical Study.

Coal Recovery: The maximum amount of economically recoverable coal will be extracted from the North Rilda Area of the Deer Creek Mine with the exception of protective coal barriers which must be left in place to ensure the integrity of the mine entries associated with the active underground workings and to protect environmentally sensitive surface resources within the Rilda Canyon Fork Area (See R_2P_2 Mine Plan Map [Volume 5, Map 3-6 & 3-7]). These protective coal barriers can be broken into five (5) separate categories:

(1) **Property Boundary Barriers:** All external property boundary lines are protected by a 50 foot (minimum) solid coal "buffer" barrier.

(2) **Protective Main Entry Barriers:** Protective main entry barriers are designed to protect long term mine entries from excessive abutment pressures of the retreating longwall. Design of these barriers are based on (I) intended duration of use, (ii) depth of cover in the area, (iii) geologic conditions present, and (iv) historical performance of similar sized barriers in similar conditions.

(3) **Bleeder Entry Barriers:** Bleeder entry barriers are designed to insure the long term stability of the longwall panel bleeder system. Design of these barriers is based on (I) intended duration of use, (ii) depth of cover in the area, (iii) geologic conditions present, and (iv) historical performance of similar sized barriers in similar conditions. Evaluation of localized conditions at the time of development, in conjunction with the preceding design parameters, will be on-going to determine final barrier sizing so that bleeder entry stability and coal recovery may be optimized.

(4) **Surface and Sub-Surface Resource Protective Barriers:**
   (a) In-place coal will be left within the Rilda Canyon fork area to insure the long-term stability and integrity of environmentally sensitive surface and sub-surface resources.
   (b) In-place coal will be left within the Mill Fork Access area to ensure the long-term stability and integrity.

(5) **Mining Below the Right Fork of Rilda Canyon**: A portion of the right fork of Rilda Canyon lies within the proposed North Rilda Area Permit Application of the Deer Creek Mine. Due to the environmental sensitivity of the Right Fork area (specifically the sub-surface hydrologic alluvial system and associated surface riparian vegetation zone), a complete analysis of a proposed "no-subsidence" design of the 5th North Mains development within the area of the right fork of Rilda Canyon has been prepared addressing the long term ground stability and subsidence protection of the area with regards to proposed mining. All pre-mining and post-mining conditions have been evaluated based on the best geologic and engineering information currently available (refer to R645-301-500 Engineering Section: Appendix A).

The 4th North Mains consist of a 5-entry development section, bearing northwest from the Deer Creek 10th West Mains. Initial location of the 10th West/4th North intersection was based on the following:

(a) Existing Blind Canyon seam conditions encountered in 10th West Mains development.
(b) Proximity to the projection of the Mill Fork Fault Graben.
(c) Most practical access route to the North Rilda - Blind Canyon and Hiawatha coal reserves, across the North Rilda Canyon Forks area.

A complete analysis of the location and long term ground stability of the 4th North / 10th West Mains and the Left Fork of Rilda Canyon was prepared and submitted by PacifiCorp to the BLM on November 15, 1996. Approval to proceed with relocation and development of the 4th North Mains was given by the BLM (per letter) February 13, 1997.

With regard to PacifiCorp's North Rilda Area Permit Application, the 4th North Mains were originally projected to be developed northwest (approximately 3000 feet), from the 4th North / 10th West Mains intersection. Based on the results of the 1997 surface exploration conducted in the Right Fork of Rilda Canyon, a meeting was held in October 1997 with DOGM, USFS, and BLM to discuss the re-location of the 4/5th intersection to maximize the overburden in the Right Fork stream crossing. The 5th North Mains were re-located approximately 800 feet west of the original projection, increasing the overburden from 120 to approximately 200 feet. Based on the information gained from the surface exploration program, a detailed plan was developed to position the 4th North/5th North intersection to optimize the "no-subsidence" design of long term entry stability for the 5th North / Rilda Canyon Right Fork crossing route and rock slope access into the lower Hiawatha Seam as well as maximizing overall reserve recovery within the area.

It is expected that recovery rates of 85% can be obtained within the proposed longwall panel areas. The overall minable reserve recovery for the North Rilda Canyon area of the Deer Creek Mine is estimated at approximately 65%. In addition to the protective barriers listed above, Energy West (now Interwest Mining Company)_has no plans on recovering coal pillars for remaining gateroad and mainline development entries.

The Deer Creek mining plan is based on the geologic information of the area obtained from outcrops, drilling, and previous mining by the operator. For geologic information of this area, refer to R645-301-600 and Volume 8 of the MRP.

R645-301-523 Mining Methods

The following is a description of the mining operation proposed to be conducted during the life of the mine within the North Rilda Canyon Area, including the methods of coal mining, engineering techniques, and anticipated annual and total production of coal.

Continuous Mining Units (Main Entry and Longwall Section Gateroad Development):
The principal purpose of the continuous mining units within the North Rilda Area of the Deer Creek Mine is underground mine development (i.e. section development of mainline entries, longwall section and gate road development, and longwall section setup/bleeder entry development; along with development of mine water holding sumps, rock storage rooms, etc.).

Figure R645-301-500a (Figure Tab) illustrates the basic configuration of a typical five-entry main, consisting of (nominal) 20 feet wide entries and crosscuts driven on standard 80 feet x 100 feet entry centers. The pillars created measure a (nominal) 60 feet wide x 80 feet long; a size which has been developed for sufficient support of the main entries and overlying strata.

A variation to this typical configuration was utilized for the development of main entries underlying the crossing of the Rilda Canyon Right Fork Area. These five-entry mains consist of (nominal) 20 feet wide entries and crosscuts driven on 80 feet x 130 feet entry centers. To eliminate multiple intersections in the stream crossing area, crosscut locations were staggered. The pillars created measure a (nominal) 60 feet wide x 110 feet long; a size which improves long term main entry stability and overlying strata stability through an area of hydrologic and surface resource concern.

Figure R645-301-500a also illustrates the basic configuration of a typical two-entry longwall panel development, consisting of (nominal) 20 feet wide entries and crosscuts driven on (nominal) 50 feet x 100 feet entry centers. With the retreating longwall mining system, all panel development work is accomplished by continuous mining units prior to longwall installation.

Longwall Mining System: The predominant mining method to be used in the North Rilda Area of the Deer Creek Mine is *Longwall Retreat Mining*. This method, as practiced by PacifiCorp, presents the safest and most efficient underground resource recovery mining method available.

As referenced above, the two-entry gateroad system is developed with (nominal) 20 feet wide entries and crosscuts driven on (nominal) 50 feet x 100 feet entry centers. This type of "yield pillar" configuration is designed so that the gateroad pillar will gradually yield as longwall retreat proceeds from panel to panel. The purpose of this design is to prevent the buildup of unrelieved stresses within the pillar.

Figure R645-301-500b (Figure Tab) illustrates the basic configuration of a retreating longwall system. After gateroad entries are driven to the extent of the longwall panel length, on both sides of the longwall panel, setup and bleeder entries are driven to connect the gateroads. A solid coal barrier is left between the setup and bleeder entries, size based on; (1) intended duration of use, (2) depth of cover

in the area, (3) geologic conditions present and (4) historical performance of similar sized barriers in similar conditions.

Longwall face width, depending on the geologic parameters of the coal deposit, varies from 500 feet to 1000 feet wide. Standard face width is 750 feet center to center (from center-line of head-gate belt entry to center-line of tailgate entry), or 730 feet coal block width. Once installed in the setup entry, the longwall begins retreat mining (from the setup entry "outby" toward the main line entries). A protective barrier is left between the mined out longwall panel (extraction face) and the main line entries that is sized to insure long term main line entry stability.

Panels are designed within the mining area, bounded by natural and imposed limits, with varying degrees of confidence as to final location and extent. Faults may vary somewhat from currently assumed locations. Geologic limitations such as seam splits, channel scours, spars, stratigraphic thinning, burned coal areas, etc. may affect resource recovery by varying the mining limits by hundreds of feet as information becomes available and as mining recovery economics and practicality are further refined. Regulatory mining restrictions, such as escarpment protection barriers and perennial stream buffer zones further confine mining extent.

The anticipated production will be obtained by utilizing two to three continuous mining units and one longwall mining system. The Deer Creek Mine normally operates two continuous mining units and one longwall mining system.

The North Rilda Area of the Deer Creek Mine was developed with mains and sub-mains which supported a series of longwall mining panels. This system is very effective in extracting and maximizing coal recovery. Approximately 75% of the Deer Creek minable coal reserve will be extracted by longwall mining systems, 25% will be extracted by continuous miner development.

The extracted coal is transported by underground conveyor belt to the Deer Creek portals, sized in the Deer Creek coal handling facility and conveyed to the PacifiCorp - Huntington Power Plant, approximately two miles away. A portion of the coal was also transferred to the Cottonwood Mine loading facilities via underground conveyor belts and transfer shaft. The loading facility and underground conveyor system is no longer in operation.

The interburden in the minable area where the two seams overlap averages about 80 feet. Multi-seam mining will be evaluated where in interburden thickness of less than 30 feet exist between the two seams.

The mine layout of the Deer Creek mine is illustrated in Volume 5, Maps 3-6 and 3-7. The drawings show an arrangement of longwall panels and development sections interconnected by systems of main and sub-main entries. This arrangement is predicated on geographical dedication of reserves, regulatory mining restrictions, available coal quality, and geologic information.

The planned mine development sequence accommodates longwall panels as the primary means of efficiently extracting the reserves. This will ensure the best possible means of maximizing reserve recovery while maintaining consistent coal quality and ground control. Volume 5, Map 3-6 and Map 3-7 shows the North Rilda Area. Table 3 (Volume 2, Part 3) provides the approximate number of acres affected by mining in five-year increments for the Deer Creek Mine.

Mine Production: Average Production rates for the North Rilda Area were approximately 1,150 tons/machine shift for continuous miners and 9,000 tons/machine shift for the longwall. Table 4 (Volume 2, Part 3) of the MRP lists the anticipated annual and total production of coal at the Deer Creek Mine.

All in-mine coal haulage is by belt conveyor. Of the total entries in the main entry system, at least one entry is dedicated specifically to the belt conveyor. All mine personnel and materials are transported underground by diesel equipment. Table 5 (Volume 2, Part 3) lists the major ancillary equipment used in Deer Creek Mine.

R645-301-524 Blasting and Explosives

The Deer Creek Mine is no longer a producing underground mine (production ceased on January 7, 2015) and there is no anticipated need for any surface blasting activities incident to the underground mining activities. However, if circumstances develop that require surface blasting activities, a plan will be initiated in accordance with DOGM regulations in R645-301-524.

R645-301-524.100 Blaster Certification

All surface blasting incident to underground mining operations will be conducted under the direction of a certified blaster. Blaster certifications will be kept at the blasting site during blasting activities.

A certified blaster and at least one other person will be present at the firing of a blast. The blaster will be familiar with the blasting plan and site specific performance standards (refer to Volume 3 Appendix VI for the approved plan)

R645-301-524.200 Blast Design

Submittal of blast designs for shots will be made to the Division for approval prior to conducting surface blasting at the mine site. A schedule will be presented to the Division prior to conducting blasting activities. The blast design will be prepared and signed by a certified blaster.

R645-301-524.300 Blast Survey

A pre-blasting survey will be conducted as needed.

R645-301-524.400 Blast Schedule

If conducted, the blaster will use audible signals to notify those in the vicinity immediately before the blast. No residents live within one-half mile of the proposed blasting site. All blasting will be conducted between sunrise and sunset.

R645-301-525 Subsidence Control Plan

This section describes in detail the operator's plan to ensure minimal environmental impacts from mine-induced subsidence. The Operation Plan (Volume 2, Part 3) plus the Geology Section (Volume 8) present the detailed data on which the analytical approach for the subsidence control plan is based. The following subsections describe the principal factors involved in controlling subsidence impacts resulting from the proposed mining operations.

For subsidence control and monitoring information specific to the Mill Fork Lease, please refer to Volume 12, Mill Fork Lease, ML-48258 in the Deer Creek MRP.

R645-301-525.100 Subsidence Damage Probability Survey

A survey has been conducted on that portion of East Mountain surface which could possibly be affected by the mining of coal from the North Rilda and Mill Fork areas. It has been determined that there are renewable resources present in the area in the forms of springs, water seeps, grazing land, timber, and wildlife. There are no springs and seeps located above the projected mining activities in the North Rilda Area. The occurrence of the springs is discussed in the hydrology section of this document (Section 700). Only two springs are located within the North Rilda permit area, 80-50 located in Section 29 and the Rilda Canyon Springs located in Section 28 (refer to Volume 9 HM-9 for the location of the springs and Volume 9 - Hydrologic Section of the Deer Creek MRP: Appendix A for sampling sites and monitoring schedule). Most of the streams within the permit area are ephemeral and/or intermittent. Only the lower portion of Rilda Canyon Creek below the Rilda Springs is considered perennial. The streams are fed by springs that emanate primarily in the North Horn Formation west of the permit boundary. Second mining (i.e. longwall extraction, room & pillar, of the North Rilda area) will be limited to the ridge separating Rilda and Mill Fork canyons and subsidence will not occur beneath the stream channels of these canyons. First mining (i.e. mainline, gateroad development) did occur below the Right Fork of Rilda Canyon. For a complete analysis of the proposed "no subsidence / long term stability" design of the 5th North Mains development within the Right Fork of Rilda Canyon and the long-term stability analysis refer to the Engineering Section R645-301-500 A. To protect the alluvial/colluvial system of the Right Fork of Rilda Canyon a stream buffer zone was established based on the extent of the riparian zone and the angle of draw from the Hiawatha Seam, the lowest seam to be mined. The riparian zone within the Right Fork of Rilda Canyon was delineated by field observation, aerial photography, and map contour analysis. The extent of the identified zone is based on the contact of the alluvial/colluvial fill with the canyon's side slopes. The angle of draw was calculated from the Hiawatha Seam horizon/elevation @ 15 degrees to the point of intersection on the surface. The stream buffer zone delineates the area restricted to full extraction mining. The referenced 15 degree angle of draw is an industry/agency accepted

standard used for delineation of surface influence protection from mining areas considered for full extraction mining. Mining experience at PacifiCorp's Deer Creek, Cottonwood, and Trail Mountain mines has provided a sound, scientific basis for using the 15° angle of draw mentioned above (refer to Annual Subsidence Reports of the Deer Creek MPR).

The angle of draw of subsidence produced by full-extraction mining can be influenced by many factors. These include the size of the area mined; number of seams mined, fractures or faults in the overburden, adjacent mine workings, and adjacent areas of burned coal and clinker. If mine workings extend to an area of burned coal, experience has shown that the overburden stresses above the mined area can be transferred to the adjacent burned coal and clinkers which can cause the clinkered areas to fail. In this case, the angle of draw may appear to be very shallow, when the crushing of the clinkered areas is the source of subsidence outside the normal area of influence.

Faults can also influence the angle of draw. If mining occurs adjacent to an existing fault, the area of subsidence will follow the natural plane of weakness formed by the fault. In this case, the angle of draw will be the same as the dip of the fault.

Based on data collected by the U.S. Bureau of Mines and eighteen years of subsidence data collection on East and Trail mountains, the angle of draw is found to be between 0 and 15 degrees from vertical. In some limited areas, the angle of draw is greater than 15 degrees, but in every case, the angle is greater due to the influence of one of the other factors mentioned above.

For planning purposes, any barrier of protection left in the mine to protect surface features should use a 15 degree angle of draw unless one of the factors mentioned above is known to exist in the immediate area.

No structures such as cabins, fencing, water troughs, and stock ponds currently exist within the boundaries of the North Rilda Area. A single gas well (Merit Energy Federal 32-23) is located adjacent to the mine workings in Section 23, T16S, R6E, SLB&M. A cooperative agreement between Merit Energy and PacifiCorp ensured that mine workings were confined in such a way that the well and associated pipeline were not impacted by mining or subsidence.

R645-301-525.200 Protected Areas

The operator will conduct the underground mining operations so as to prevent subsidence from causing material damage to the surface and to maintain the value and reasonable foreseeable use of that surface in accordance with the preceding subsidence control plan.

As mentioned in the PROBABLE HYDROLOGIC CONSEQUENCES DETERMINATION section, (728: Hydrologic Balance - Surface Water System), the drainages conveying runoff away from the permit areas are streams in Rilda, and Mill Fork canyons. Second mining, i.e. longwall extraction, room & pillar, of the North Rilda area will be limited to the ridge separating Rilda and Mill Fork canyons and subsidence will not occur beneath the stream channels of these canyons. First mining, i.e. mainline, gateroad

development, will occur below the Right Fork of Rilda Canyon. For a complete analysis of the proposed "no subsidence / long term stability" design of the 4/5th North Mains development within the Right Fork of Rilda and long-term stability analysis, refer to Volume 11 Appendix Volume - Engineering: Appendix A. To protect the alluvial/colluvial system of the Right Fork of Right Fork of Rilda Canyon, a stream buffer zone was established based on the extent of the riparian zone and the angle of draw from the Hiawatha Seam, the lowest seam to be mined. The riparian zone within the Right Fork of Rilda Canyon was delineated by field observation, aerial photography, and map contour analysis. The extent of the identified zone is based on the contact of the alluvial/colluvial fill with the canyon's side slopes. The angle of draw was calculated from the Hiawatha Seam horizon/elevation @ 15 degrees to the point of intersection on the surface. The stream buffer zone delineates the area restricted to full extraction mining. The referenced 15 degree angle of draw is an industry/agency accepted standard used for delineation of surface influence protection from mining areas considered for full extraction mining. Mining experience at PacifiCorp's Deer Creek, Cottonwood, and Trail Mountain mines has provided a sound, scientific basis for using the 15° angle of draw mentioned above (refer to Annual Subsidence Reports of the Deer Creek MPR).

R645-301-525.300 Subsidence Control

The operator intends to minimize surface effects of subsidence by adopting, wherever practical, the longwall mining method and mining the coal deposits as completely as possible. The areas within the mine limits not mined by the longwall method will be mined by continuous miner in development for the longwall system. Approximately seventy-five percent (75%) of the recoverable coal reserve will be mined by the longwall method, the remaining area will be mined by continuous miner units.

The longwall mining method allows almost total extraction of the mineral and induces caving of the immediate and upper roof strata. As the coal seam is extracted, the overlying stratum caves rapidly. The caving process has been shown to propagate to within 100 feet of the surface in less than two weeks after mining. This was determined by a cooperative study conducted by the U.S. Bureau of Mines using Time Domain Reflectometry (TDR). In this study, a coaxial cable was cemented within a drill hole positioned near the center of the 14th West longwall panel in the Cottonwood Mine. As the caving of the strata occurred, the cable would shear or be stretched. The depth of the shears or stretches could be identified with instruments on the surface. The data collected from this study is contained in Volume 3, Appendix IV of the MRP. Surface subsidence has been observed within two months of the coal extraction. In most areas, the subsidence will stabilize within 2 years of mining.

It is the operator’s intent to mine areas as wide and long as present mining technology or equipment allows in order to minimize the area which would be on the sloping edge of the subsidence trough. The pillars of support for the longwall gate roads have been designed on the yielding pillar principle so that they will yield to destruction. This has been proven in practice in the mines and therefore will not affect the subsidence trough.

The size of the support coal pillars used in mine planning for both the Blind Canyon and Hiawatha seams to ensure long term stability has been determined by basic calculation for the deepest expected cover (from prior mining practice in the area) and USBM study. Experience has also shown that, in multi-seam mining circumstance, columnizing main entry development pillars in both seams is essential for long term main entry stability.

Full extraction areas, by definition, are planned and can control subsidence in areas. It is anticipated that the planned subsidence will minimize impacts and result in a generally uniform lowering of the surface lands in broad areas, thereby limiting the extent of material damage to those lands and causing no appreciable change to present land uses and renewable resources. Subsidence prediction work has shown that the expected maximum planned and controlled subsidence will vary from zero to fifteen (0-15) feet, assuming that the total cumulative extraction from the two minable seams will not exceed twenty (20) feet.

First Mining, "No Subsidence Restricted" Areas

1) Right Fork of Rilda Canyon
   First mining, (i.e. mainline development), has occurred below the Right Fork of Rilda Canyon. For a complete analysis of the proposed "no subsidence / long term stability" design of the 5th North Mains development within the Right Fork of Rilda Canyon and the long-term stability analysis refer to the Engineering Section R645-301-500 Appendix A.

2) Mill Fork Permit Area (Federal Lease UTU-84554) Access (Hiawatha Seam)
   Access to the to North Rilda Hiawatha seam reserves was achieved with the development of rock slopes and vertical raises from the Blind Canyon seam to the lower seam. From the bottom of the slopes, a 5-entry set of mains (referred to as 6th North Mains) were developed to the northeast for access to gateroad development in the Hiawatha seam. Main line development was reduced to three entries above 6th Right.

Based on data acquired through surface coal exploration programs, Energy West (now Interwest Mining Company) developed a mine plan to access the Mill Fork State Lease with a set of 6-entry mains driven on a northwest bearing from the 6th North Mains. Mining within the Mill Fork Access corridor will be restricted to mainline development. To ensure long term stability, pillars will not be removed (refer to Volume 5 Map 3-7).

R645-301-525.400 Subsidence Monitoring Plan

The operator initially adopted a twofold approach to subsidence monitoring:

1) Aerial photogrammetry,
2) On-the-ground monumentation.

After seven years of comparing the two types of surveys it was determined that both methods effectively document the amount of subsidence which has occurred; however, the aerial photogrammetry method has the advantage of showing more detail because more data points can be monitored with less effort. Therefore in 1987, with the concurrence of the State of Utah, Division of Oil, Gas & Mining (DOGM), the operator discontinued on-the-ground monumentation and now collects subsidence data solely by aerial photogrammetry.

The subsidence monitoring program, conducted since 1980, has produced data which not only document the amount of subsidence that has occurred but also allows the operator to predict the amount of subsidence that is likely to occur when mining in new areas. The detail of the data collected in years past is not included herein. If the reader desires to investigate past data, it can be found in the annual subsidence reports on file at DOGM.

Aerial Photogrammetry: PacifiCorp's subsidence monitoring program is primarily based on aerial photogrammetry. A baseline photogrammetric survey was conducted in 1980 which includes over 12,000 elevations measured on a 200-foot spacing grid. These elevations are then compared to elevations measured from the photographs taken annually in August. This method has proven to be the best way to collect subsidence data on East Mountain. In flat areas, with limited vegetation, the elevations can be read from the photographs with a precision of one-half foot. In steeper areas, where cliffs are present, the resolution becomes less reliable, and inaccuracies of greater than ten feet can occur. In steeper areas, photogrammetric monitoring can, and has been, augmented by conventional survey data. The applicant will maintain survey control aerial targets within the permit boundary necessary to allow the interpretation of coordinates on photos within ±1 foot. Following this procedure the operator has conducted annually an aerial photo survey of all areas which have been undermined until 3 years elapsed after the last date of mining. The operator continued monitoring all areas undermined until it was mutually agreed by the operator and DOGM that the subsidence in the mining area became stable and that no further monitoring is necessary. The findings of the survey shall were reported to DOGM annually in a summary report through 2017.

Special Monitoring - Castlegate Cliff Escarpment

North Castlegate Escarpment - North Rilda Area

The Castlegate Sandstone escarpment within the northern portion of the North Rilda Area has very limited surface exposure due to presence of talus slopes and vegetation that cover the formation in this area. Due to the limited surface exposure of the Castlegate escarpment, no special monitoring or mine layout protection measures was planned for the escarpment in this area (refer to Volume 11 Appendix Volume - Engineering: Appendix A for a comparison of the North Castlegate Escarpment to previously mined areas).

South Castlegate Escarpment - North Rilda Area

The Castlegate escarpment, within the southern portion of the North Rilda Area, has well established surface exposure. Based on a geotechnical study evaluating the potential effects of longwall (full-extraction) mining on the

stability of the Castlegate Sandstone escarpment, i.e. Cottonwood Newberry Canyon/Corncob Wash and Trail Mountain 5th East Cottonwood Canyon Test Areas, development of a predictive escarpment/mining model was developed and presented to DOGM, USFS and BLM. The model developed from these studies was used to forecast anticipated effects of proposed mining under the escarpment within the southern portion of the North Rilda Canyon Area, i.e. two (2) southern-most longwall panels proposed in the Blind Canyon and Hiawatha Seams - North Rilda Area (See R_2P_2 Mine Plan Maps Volume 5, Maps 3-6 & 3-7). Based on the predictive escarpment/mining model, areas of potential cliff escarpment failure were monitored with photogrammetric methods, augmented by conventional survey data.

To comply with the special monitoring stipulation referenced in the environmental assessment, "Deer Creek Mine will also monitor subsidence through their mine plan requirements and as proposed, provide higher resolution monitoring data for the North slope of Rilda Canyon by installing prisms for accurate surveying on the top of the escarpment", PacifiCorp installed a series of prisms in 1999 to document subsidence features of Castlegate escarpment (Refer to Map DU1688E in Volume 11 Appendix Volume - Engineering: Appendix A).

Prisms PR-1, PR-2, and PR-3 were installed in February 1999 prior to full extraction mining. Prisms PR-4, PR-5, and PR-6 were installed in June 1999.

All prisms were monitored prior to mining to establish baseline values and percent error variations. During the mining process, prisms were monitored daily until the movement stabilized. Data from the prism monitoring has been reported in each Annual Subsidence report.

In addition to the prism monitoring, PacifiCorp installed warning signs in Rilda Canyon prior to undermining the two southern panels.

After undermining the prisms, each were found to have moved within a few days or weeks after mining was completed. Movement continued throughout 2002 and 2003. Since 2003, the prisms movements have essentially stabilized. Energy West (now Interwest Mining Company) considers the subsidence to be complete and monitoring has discontinued. Prism data has been reported in the annual subsidence report each year from 2000 to 2007.

PacifiCorp did cooperate with the surface land management agency (U.S.D.A. Forest Service) in an environmental analysis of the potential impacts. Final mining approval of the referenced southern longwall panels was granted based on the objective evaluation of the predictive model and assessment of potential surface impact from full-extraction mining within the affected area. The environmental analysis is complete with the associated Decision Notice/FONSI signed on 11/1/99 (see Volume 11 Appendix Volume - Engineering: Appendix

C and D in this section) and DOGM consent dated November 10, 1999 (Volume 11 Appendix Volume - Engineering: Appendix E).

R645-301-525.500 Repair of Damage

Should significant subsidence impacts occur, the applicant will restore, to the extent technologically and economically feasible, those surface lands that were reduced in reasonably foreseeable use as a result of such subsidence to a condition capable of supporting pre-subsidence reasonably foreseeable uses.

In order to restore any land affected by operations to a condition capable of supporting the current and post-mining land uses stated herein, the operator will replace water determined to have been lost or adversely affected as a result of operator's mining operations if such loss or adverse impact occurs prior to final bond release. The water will be replaced from an alternate source in sufficient quantity and quality to maintain the current and post-mining land uses as stated herein.

During the course of regular monitoring activities required by the permit, or as the operator otherwise acquires knowledge, the operator will advise DOGM and the surface land management agency of the loss or adverse occurrence discussed above, within ten working days of having determined that it has occurred. Within ten working days after DOGM notifies operator in writing that it has determined that the water loss is the result of the operator's mining operation, the operator will meet with DOGM to determine if a plan for replacement is necessary and, if so, establish a schedule for submittal of a plan to replace the affected water. Upon acceptance of the plan by DOGM, the plan shall be implemented. The operator reserves the right to appeal DOGM's water loss determinations as well as the proposed plan and schedule for water replacement as provided by Utah Code Ann. 40-10-22(3)(a).

As outlined earlier, there are no springs or seeps located above the projected mining activities in the North Rilda Area. Most of the streams within the permit and affected areas are ephemeral and/or intermittent. Only the lower portion of Rilda Canyon Creek below the forks is considered perennial. The streams are fed by springs that emanate primarily in the North Horn Formation west of the permit boundary. Second mining, i.e. longwall extraction, room & pillar, of the North Rilda area will be limited to the ridge separating Rilda and Mill Fork canyons and subsidence will not occur beneath the stream channels of these canyons. First mining (i.e. mainline) gate road development will occur below the Right Fork of Rilda Canyon. For a complete analysis of the proposed "no subsidence / long term stability" design of the 5th North Mains development within the Right Fork of Rilda Canyon and long-term stability analysis refer to the Engineering Section Volume 11 Appendix Volume - Engineering: Appendix A. To protect the alluvial/colluvial system of the Right Fork of Rilda Canyon a stream buffer zone was established based on the extent of the riparian zone and the angle of draw from the Hiawatha Seam, the lowest seam to be mined. The riparian zone within the Right Fork of Rilda Canyon was delineated by field observation, aerial photography, and map contour analysis. The extent of the identified zone is based on the contact of the alluvial/colluvial fill with the canyon's side slopes. The angle of draw was calculated from the Hiawatha Seam horizon/elevation @ 15 degrees to

the point of intersection on the surface. The stream buffer zone delineates the area restricted to full extraction mining. The referenced 15 degree angle of draw is an industry/agency accepted standard used for delineation of surface influence protection from mining areas considered for full extraction mining. Mining experience at PacifiCorp's Deer Creek, Cottonwood, and Trail Mountain mines has provided a sound, scientific basis for using the 15° angle of draw mentioned above (refer to Annual Subsidence Reports of the Deer Creek MPR).

R645-301-525.700 **Public Notice**

The operator will not mine in any areas that would allow potential subsidence effects (as indicated by the angle of draw) to affect any area outside of the lease and affected area boundary until this constraint on coal recovery is resolved by OSM and BLM or permission is granted by the adjacent surface agencies. A mining schedule; which details the area in which mining is to take place and the planned date of the mining activity, has been submitted to the affected surface owners.

R645-301-526 Mine Facilities

Support facilities exist and have been constructed in Rilda Canyon, a tributary of Huntington Canyon; Left Fork Fan Facilities, and Rilda Canyon Portal Facilities. The Left Fork Fan Facilities pad and access road of this area occupy approximately 2.01 acres of Manti-La Sal National Forest land in the NW1/4, NW1/4, SE1/4 of Section 29, T16S, R7E, SLM. These facilities include an access road and a pad area which supports two portals, a substation, power line, fan, water storage tank, and pumphouse. Topsoil removed prior to construction of the site is stored within the disturbed area of the Left Fork Rilda Canyon facilities.

Vehicular access in the Left Fork portal area has been limited to the public turn-around area below the portal facilities. However, the Left Fork road continues to serve as a Forest Development Trail, allowing access by horseback and foot travel up the Left Fork of Rilda Canyon and beyond the fan facility area. Access to the facility pad is controlled with fencing and a locked gate at the point where the road enters the pad. The existing trail continues beyond this point.

As the Deer Creek Mine has ceased production and has been decommissioning and recovering the mine since January 2015, the road leading to the Left Fork portals will be used for underground equipment recovery, access to the underground workings as other parts of the mine are sealed, and reclamation of the portal sites and the access road. This is specialized one-time work for the recovery and reclamation of the mine, mine portals and the access road itself.

During the winter months, snow fall depths on the access road can hamper and greatly delay access. If and when snow depth along the access road becomes greater than 12 inches, snow removal activities will be practiced.

Snow removal activities will be accomplished by push, pickup, load and haul techniques. Snow volumes will be hauled to the Deer Creek Mine active waste rock site via ten wheel dump trucks and placed for proper treatment of the snow melt runoff. Side casting of snow into the Left Fork Rilda Creek drainage or the adjacent road ditch will not be practiced.

Specific locations and other information regarding the access road and facility pad in Left Fork Rilda Canyon are shown in Volume 4, Maps 2-15A and 2-17A; Volume 5, Maps 3-9A and 3-9B; and Volume 6, Maps 4-1A and 4-4A (Sheets 1, 2 and 3). More specific information about each of the structures and facilities is provided in the MRP. [Volume 2, Part 3 entitled "MINE FACILITIES (Rilda Canyon)"].

Rilda Canyon Portal Facility is located on a 7.28 (including soil storage area) acre site approximately 2.0 miles from the mouth of Rilda Canyon. Of the 7.28 acres of actual disturbance, approximately 1.79 acres were previously disturbed by earlier mining which leaves only 5.49 acres of additional disturbance needed for the surface facilities. The site is characterized by moderate vegetation and rugged, steep terrain. Surface facilities as described in R645-301-521.180, include the following: Access and Mine Fan Portals, Mine Fan, Facilities Pad, Fuel Dock, Rock Dust Tank, Waste, Rock and Waste Rock Storage Bins, Covered Storage Buildings, Substation, Lift Station, Sediment Basin, Sediment Pond, and Drainage Systems. A pre-disturbance topography map is constructed to show the contour of the canyon prior to any construction activities. This map is found in the Maps Section as Map 500-1. As-built construction cross-sections are found on Map 500-4. All construction cut slopes and fills conform to the recommendations outlined in the Geotechnical Study found in Volume 11, Appendix Volume - Engineering: Appendix F.

R645-301-526.110 Mine Structures and Facilities

As illustrated on Map 500-1, three abandoned mines exist on the north side of Rilda Canyon: Leroy, Rominger, and Jeppson mines (also refer to photos A through C in Volume 11 Appendix Volume - Engineering: Appendix G, Previously Disturbed Areas). These areas were reclaimed by AML in 1988. No structure presently exists in connection with these mines except for their respective reclaimed footprints. The lower portion of the Leroy Mine is utilized for the location of the sediment pond. Approximately 1.5 acres of pre-disturbance exists at this site where coal was buried during reclamation activities conducted by AML. The soil covering this coal was stripped off and stored during construction activities. The coal was hauled off to the existing Deer Creek waste rock site (now owned and controlled by ~~Bowie Refined Coals~~ Castle Valley Mining LLC. under a separate permit) or utilized if the quality proved acceptable. Substitute topsoil stripped from the facilities area ~~and~~ was stored at the topsoil storage area which is located next to the NEWUSSD spring collection facility. Both topsoil and substitute topsoil (approximately 7,862 cubic yards) ~~are~~ were stored at this location until reclamation activities commenced.

The North Emery Water Users Special Service District (NEWUSSD) spring system (refer to photos D through F in Volume 11 Appendix Volume - Engineering: Appendix G (Previously Disturbed Areas) consists of a series of collection lines extending westward up Rilda Canyon and southward up a small side drainage as shown on Map HM-8 (refer to Volume 9 - Hydrologic Section of the Deer Creek MRP). The NEWUSSD spring system

~~is~~ was metered at four locations. ~~Meter 1 (Side Canyon Spring) is located at the downstream end of a collection line which enters Rilda Canyon from the South. Meter 2 (Side Canyon Spring plus South Spring) is located near the bottom of the main east-west trending collection line which lies to the south of Rilda Canyon Creek at a point just upstream (west) of the main spring collection box. Meter 3 (North Spring) records flows for the east-west central collection line which was constructed through the central portions of the valley near Rilda Canyon Creek. Meter 4 (North Spring) collects data from the north collection line located on the north side of Rilda Canyon Creek. Meter 3 and Meter 4 were combined in 1995 during the Rilda Canyon road improvement project.~~ All meters at the spring collection location were eliminated during the reconstruction of the spring system in 2014. A metering station is located on the main line at the mouth of Rilda Canyon. The spring flows can be monitored with weirs located in the upper spring collection box #1 and the lower collection box near the lower flume.

In addition to the main spring collection lines, there are two flumes in the vicinity which monitor flow rates within Rilda Canyon Creek. The upper flume, RCF-2, ~~is~~ was located adjacent to the extreme west end of the spring collection system monitored by Meter 4. This flume was destroyed during the fire mitigation efforts immediately after the Trail Mountain Fire in June, 2019. Flume RCF-3 is located in Rilda Canyon Creek adjacent to the lower spring collection ~~Meter 2~~ box.

Initially five shallow wells were located in the area surrounding the spring collection system to monitor groundwater level fluctuations through time. The locations of the wells are shown on Volume 9 Map HM-9. Wells 1 through 5 are relatively shallow wells which were constructed prior to 1989 by West Appa Coal Company. In 1990, two additional large diameter wells were developed, (Wells 6 and 7) adjacent to wells P-2 and P-3, respectively, in order to obtain more complete groundwater data through aquifer testing. Wells P-2 and P-3 were abandoned and sealed in 1995. All of the shallow wells were plugged in November, 2018 following approval of an amendment by DOGM to remove these wells from the water monitoring program.

R645-301-526.116.1 Mining Within 100 Feet of Public Road

PacifiCorp ~~intends to~~ conducted coal mining and reclamation activities within 100 feet of Emery County Road #306. However, in 2005, PacifiCorp entered into two separate agreements with Emery County Special Services District No. 1 to encroach upon their right of way in Rilda Canyon. Agreement #1 ~~is~~ was made to reconstruct, realign, widen, and surface County Road #306 to allow for increase speed and increased traffic. Agreement #2 ~~is~~ was made to allow a portion of this road to be temporarily restricted from public use. The restricted use area start~~s~~ed approximately 1/4 mile west of the cattle guard and extended approximately 2,300 feet to the mine gate in the left fork of Rilda Canyon (refer to Figure R645-301-500c). A copy of Agreements #1 and #2 are found in Volume 11 Appendix Volume - Engineering: Appendix B. Access ~~will be~~ was given to Emery County Road Department officials and North Emery Water Users Special Services District for periodic inspection and maintenance of their facilities and also to regulatory and other governmental agencies so they ~~may~~ could access their jurisdictional areas. Photos of the

suspended portion of the road are found in Volume 11 Appendix Volume - Engineering: Appendix G (Existing Road).

R645-301-526.116.2 Relocating a Public Road

Emery County Road #306 exists in the location of the North Rilda Canyon portal facilities. This road runs approximately 3.0 miles from the Huntington Canyon road, Highway 31, to the turnaround area in the Left Fork of Rilda Canyon. It is owned and maintained by Emery County Special Service District No. 1. As mentioned above, an agreement ~~has been constructed~~ was made between PacifiCorp and Emery County to suspend the public use of a portion of EC #306. Approximately 2,300 feet of the road ~~has been~~ was temporarily eliminated through the facilities throughout the life of the mine. At time of reclamation, the suspended portion of the road ~~will be~~ was reconstructed in its original location and to its original design. The design and construction plans are the property of Emery County Road District and are better known as Rilda Canyon Road Change Order #1. PacifiCorp has retained a copy of these plans and formatted them onto a CD. These plans can be reviewed in Volume 11 Appendix Volume - Engineering: Appendix G. Reclamation and replacement of the road ~~will be~~ was completed to the standards found in these original road designs. Figure R645-301-500c in the Figures Section shows the location of the road and typical road section.

As this restricted use area eliminates public access to the former Forest Service trail system in the canyon, PacifiCorp's Agreement #1 with ECSSD#1 includes the construction of a new trailhead and parking area on the east end of the mine facilities and the reconstruction of the county road (see detailed design in Figure R645-301-500c in the Figures Section and discussion in the Reclamation Plan below). PacifiCorp has established a trail (in cooperation with the USFS) on the south side of Rilda Creek that by-passes the mining facilities. The trail crosses the Rilda Canyon creek and travels parallel to the creek to a point where it reconnects to the existing trail as shown in Figure R645-301-500c. The trail has been constructed to comply with USFS design parameters. Upon reclamation, the trail will be eradicated and the road will be relocated to its original location. (The Trail Mountain Fire of June, 2018 burned the forest surrounding this trail. Fire-fighting efforts and drainage reconstruction activities in the Rilda Canyon drainage effectively obliterated the trail. Completion of the reclamation of the Rilda Canyon portal site and restoration of the County road have eliminated the need for the trail.)

R645-301-526.200 Utility Installation and Support Facilities

As described above, North Emery Water Users Special Services District (NEWUSSD) possesses a spring collection system in Rilda Canyon near the mine facilities location (refer to Map 500-1). Water transmission lines associated with the spring collection system have been located to protect against damage from mining operations in the areas in which they pass through the disturbed area.

As Emery County Road #306 was reconstructed (2007), PacifiCorp cooperated with NEWUSSD to insure protection of water transmission lines. Location and design of EC#306 is within the jurisdiction of the Emery County Road Department. Plans for the road can be reviewed in Volume 11 Appendix Volume - Engineering: Appendix G.

Support facilities were previously discussed in R645-301-521.180. Construction and operation of these facilities were in accordance to applicable Emery County Building Codes. Drawings and specifications were submitted to the Emery County building inspector for their review.

R645-301-527 Transportation Facilities

The Rilda Canyon operations utilized roads in association with the facilities described in the above sections. The Left Fork Rilda Canyon Fan Facilities are described in Volume 2, Part 3. A description of the transportation facilities is detailed below.

Roads

The Deer Creek Mine Rilda Canyon operations utilized two roads as follows:

(a) Left Fork Rilda Canyon Access Road
(b) Emery County Road #306 (Rilda Canyon Portal Facility)

Left Fork Rilda Canyon Access Road: The Left Fork Rilda Canyon Facility Access Road is approximately 1150 feet in length (see Map 3-9A and 3-9B in Volume 5). It follows the north side of the Left Fork of Rilda Canyon from the end of the county road (suspended from public access in 2005) to the facility pad. The existing road/trail was upgraded to a gravel surfaced road in 1995 with an average width of 11 feet and an average grade of approximately 8%. The road was designed in accordance with recommendations from the surface management agency (Manti-LaSal National Forest). See R645-301-534 below and Volume 2, Part 3 for additional information.

Emery County Road #306 (Rilda Canyon Portal Facility): PacifiCorp has entered into an agreement with Emery County Special Services District #1 to reconstruct/realign county road #306 (Agreement #1 in Volume 11 Appendix Volume - Engineering: Appendix B). This road is utilized by traffic related to the mine as well for recreational and grazing purposes. The road has been completely asphalted (completed 2007) with a trailhead and parking area constructed east of the Rilda Canyon Portal Facility.

This portion of the road is owned and operated by ECSSD #1. However, during winter months snow removal will be required along the entire length of this road. As this is the responsibility of the Emery County Road Department, PacifiCorp may find the need to assist the road department by clearing snow from EC#306 by contracting this work to a private contractor. PacifiCorp will require the contractor to use a deicing product as specified by Emery County on the county portion of the road to make the road safe for mine personnel and other local traffic. The deicing product will not be stored on-site but can be acquired at the Deer Creek portal facilities. No salt has been or will be used within the disturbed areas of the Rilda Canyon Portal Facilities.

R645-301-527.100 Road Classification

Only one primary road exist~~s~~ed within the disturbed area of the Rilda Canyon portal facility area. This road begins at the mine gate (the end of public access from EC #306and terminates at the facilities pad. This road ~~is~~ was utilized daily by mine personnel and supply truck deliveries. The length of the primary is approximately 1,326 feet and coated with asphalt (asphalt was removed during reclamation in 2019). The foundation of the road is identical to the reconstructed road EC#306. The main components of the foundation are the sub-grade, sub-base, base course, and surface cover. There are no embankments associated with this road.

The subgrade is the native underlying soil that serves as the primary foundation for the road and facilities pad. Placement of the subgrade was completed in specific lifts and did not exceed 8 inches. Compaction was over the full depth of the fill to at least 95% of the maximum dry density as determined by the AASHTO T-180 test procedures. Refer to the Geotechnical Study provided by AMEC Earth and Environmental Inc. in Volume 11, Appendix Volume - Engineering: Appendix F.

The subbase is a compacted granular material between the subgrade and the base course. Typically, the subbase thickness is between 12 inches and 18 inches for the loads that are expected at the mine site. Aggregate and gradation specifications are less stringent than the specifications for the base course.

The base course is the surface layer directly beneath the surface cover. The material has strict specifications for strength, stability, hardness, aggregate type and gradation. Typical thickness of the base course is 6 inches which should provide a stable base for the surface covering material.

The surface covering material consists of bituminous material and mineral aggregates that are well graded. The cover is typically 4 inches thick. As with all foundation layers for the primary road construction, the specifications for the material and construction are detailed by the design. A typical illustration for road base design and location of primary is found on Map 500-3 in the Maps Section. Original designs for this portion of the road are found in Volume 11 - Appendix Volume 11A – Engineering: Appendix G. These designs ~~will be~~ were accessed and utilized to replace the road back to its original condition and location at time of reclamation of the site.

R645-301-528 Handling and Disposal of Coal, Overburden, Excess Spoil and Coal Mine Waste

As discussed earlier, approximately 1.79 acres of the facility was disturbed as a result of previous coal mining and other activities. Geotechnical investigations conducted during April 2004 delineated an area of approximately 0.7 acres of buried coal directly below the Leroy Mine. It was estimated that at least 3,600 tons was buried based on the following: 1) average depth of 4.0 feet, 2) in-place weight of 60 lbs/ft^3, 3) area: 30,302 ft^2. Coal waste encountered during soil salvaging and construction of the sediment pond was segregated separately and transported to the Deer Creek Waste Rock Site (now owned and controlled by ~~Bowie Refined~~

~~Coals~~ Castle Valley Mining LLC. under a separate permit) for disposal or utilized if the coal quality allowed. Quality data is found in Volume 11 Appendix Volume - Soils: Appendix A, EIS Report, Appendix 6.2, Soil Testing Data, Sample ID RIL1003.

In 2006, coal and coal waste were excavated and removed from the sediment pond area by track-hoe and truck. The quantity of coal removed was 744 tons (accounted for by weigh scales) or 249 cubic yards. This coal was shipped by truck to the Huntington Power Plant and utilized for power generation. Coal waste removed from the site was approximately 2000 cubic yards. This material was transported by truck to the Deer Creek Waste Rock Site for permanent disposal.

During operations in Rilda Canyon, very limited amounts of coal mine waste (waste rock) were transported through the Rilda Canyon portals. Most waste rock was removed through the Deer Creek portals. The Deer Creek MRP includes a narrative explaining the construction, modification, use, maintenance, and removal of coal, overburden, excess spoil, and coal mine waste through the Deer Creek portals (sealed and backfilled in April 2015).

R645-301-528.330 Non-Coal Waste

All non-coal wastes generated during mining activities and removed from the mine through the Rilda Canyon portals ~~will be~~ were placed and stored in a controlled manner in a designated portion of the disturbed area as shown on Map 500-3. The materials ~~will be~~ were removed from the site and disposed of in an approved disposal facility.

R645-301-529 Management of Mine Openings

Two (2) portals ~~are~~ were located in the Left Fork of Rilda Canyon which supported intake and return ventilation entries for the operation of the mine. Underground access to the Rilda Canyon Portal Facilities ~~is~~ was achieved by the continuation of a set of three entry 1st Right Submains and development of two rock slopes to the portal facility area near the intersection of the Right and Left Forks. All of the development has occurred in the Hiawatha coal seam and Starpoint Sandstone immediately beneath the coal seam. During the development of the Rilda Canyon Portal Facilities two separate surface breakouts were constructed; 1) Mine Fan, and 2) Intake Access. Both portals were developed [from underground] as rocks slopes through the upper member of the Star Point Sandstone (Spring Canyon Member) from the portal facility area to an interception point in the Hiawatha Coal Seam. Methods used to construct this portal and tunneled slope utilized conventional drill and shoot methods as well as conventional mining methods. The dimensions of the portals ~~are~~ were approximately 20' x 9' rectangular opening. The fan ~~is~~ was constructed at the west portal. Mine equipment and materials ~~will~~ utilized the east portal to access the northwestern part of the Deer Creek Mine.

Sealing of the portals in the Left Fork Rilda Canyon is detailed in Volume 2, Part 4, Reclamation Plan. Sealing of the portals in the Rilda Canyon portal facility is detailed in the reclamation plan in Section R645-301-540 (also refer to Figure R645-301-500d).

R645-301-530 OPERATIONAL DESIGN CRITERIA AND PLANS

R645-301-531 General

Notes: Demolition of the Rilda Canyon Portal Facilities was completed in July 2018. Earthwork operations for reclamation began in September 2018 after delays caused by the Trail Mountain Fire. Reclamation of the site was completed in June 2019.

The Trail Mountain Fire of June, 2018 created complicated third-party interference issues within the existing disturbed area boundary of the Rilda Canyon Portal Facilities. Certain sections of the disturbed area will now be removed from the permit because of these interferences.

The fire itself created the issue of potential off-site runoff from burn areas entering the disturbed area. The need for an additional engineered drainage became evident after the fire when muddy burn scar runoff water entered the disturbed area from a small drainage on the north side that had never brought water into the site before the fire.

The fire ignited abandoned coal piles and waste at the old Helco Mine site immediately adjacent to the topsoil storage area. These fires burned in the ground for over a year before being extinguished in July 2019. This incident caused the need for the Utah Abandoned Mine Lands Division to initiate a project to extinguish the fires that had the potential to smolder and reignite resulting in a public safety hazard.

The North Emery Water Users Special Service District (NEWUSSD) operates a spring collection system that straddles the stream bed between the portal site and the topsoil storage site. Within a few days after the fire was extinguished, mudflows from the burn scar passed through the spring collection site, damaging the collection infrastructure. Efforts to protect the springs from further damage were launched immediately, including building a temporary diversion structure in the creek and small canal to divert flows around the springs. These efforts have caused impacts to the disturbed area of the Rilda Canyon Portal Facilities and topsoil storage area..

In the immediate aftermath of the fire, crews from the Forest Service began to modify the stream beds in Rilda Canyon by felling burned trees and using existing downed trees to construct sedimentation structures in the stream beds, as well as building earthen dams, ditches, and diversion structures. In order to gain access to the stream bed for the spring system protective measures, heavy excavation equipment was driven across the Rilda Canyon Portal Site disturbed area in various locations, rocks and earth to be used in sediment control structures was staged within the disturbed area and left after the construction was completed. For this reason, PacifiCorp is asking that the Rilda Canyon Portal Site disturbed area be reduced to exclude these damaged areas from the disturbed area.

Emery County, through funding by the Natural Resource Conservation Service (NRCS), has plans for constructing sediment control and diversion structures over the entire area of the 0.51 acre topsoil storage site (refer to Volume 11, Appendix Volume, Hydrology, Appendix E

for plans and designs) These structures will help divert runoff and mudflows from Helco canyon away from the NEWUSSD spring area already mentioned. As the topsoil storage area is small (0.51 acres), this construction will essentially eliminate any further chance of reclamation efforts by PacifiCorp. No salvaged soils will be used in this location nor will final reclamation be performed. Therefore, since meeting the vegetation standards will not be required for this area, the Utah Coal Rules do not require a 10 year responsibility period.

This section includes a general plan for precipitation runoff management, sediment control, impoundment design, road design, and coal mine waste handling plans. Actual construction drawings for the Rilda facilities were developed by Jones and DeMille Engineers and can be found in Volume 11, Appendix Volume 11A – Engineering, Appendix H.

R645-301-532 Sediment Control

The Rilda Canyon portal facilities (not including soil storage area) cover approximately 6.77 acres of disturbed area. All water within this area ~~will be~~ was conveyed to drop drains, ditches, and/or culvert systems. Sediment control allow~~s~~ed for undisturbed runoff to bypass the facilities via a diversion ditch and culvert system into the Rilda Creek. Disturbed runoff from the facilities pad area report~~s~~ed to a single drop drain and diverted to the sediment basin via buried culvert system. Over flow from the disturbed system ~~is~~ was diverted through a buried culvert to the sediment pond located below the NEWUSSD spring collection area. Refer to Volume 11, Appendix Volume 11B – Hydrology: Appendix B for the specific design of this system.

R645-301-532.200 Stabilization

Sediment control on cut and fill slopes and soil piles will be accomplished primarily by revegetation. Prior to the establishment of vegetation, the slopes will be protected by the application of a surface tackifier, rock mulch, erosion control fabric, and/or other means approved by the Division. An undisturbed drainage ditch ~~has been~~ was constructed at the toe of the cut slopes along the north side of the facility pad to divert all undisturbed drainage away from the disturbed area. Diversion ditches ~~are~~ were protected using protective barriers to physically separate the disturbed from the undisturbed areas.

Other sediment control measures are discussed in detail in the Hydrology Section.

R645-301-533 Impoundments

As described previously, a sediment pond ~~is~~ was utilized to collect storm water runoff from the disturbed area of the surface facility area. The design of the pond is found in Volume 11 Appendix Volume - Hydrology: Appendix B. Pond design encompasse~~s~~d approximately 1.0 acre of disturbed land.

R645-301-533.200 Foundations

The pond ~~is~~ was designed as an incised structure. Foundations for embankments and impounding structures ~~are~~ were constructed as outlined in the Geotechnical Study conducted by AMEC (refer to Volume 11 Appendix Volume - Engineering: Appendix F). A construction summary is given below.

Foundations were constructed by first stripping the area of vegetation and topsoil. Large boulders were removed to a depth of at least two feet below the base of the impounding structure. The natural exposed subgrade was compacted utilizing the excavation equipment used at the pond area. At least three passes were made over the natural soils with this equipment.

Embankment fills were placed in horizontal lifts not exceeding 12 inches in loose thickness. Moderate to large sized boulders were removed prior to placement. Fill was compacted throughout by the double passing of construction, spreading, or hauling equipment over the embankment surface. Side slopes ~~are~~ were constructed to not exceed 2 horizontal and 1 vertical.

R645-301-533.300 Side Slope Protection

To protect against infiltration, the pond was over-excavated two (2) feet, compacted, and lined with clay on the bottom and sides. Areas where embankment fills were necessary (south and east sides), vegetation was planted or the slopes were armored with rock riprap to protect against erosion. Refer to R645-301-300: Biology for seed mix.

R645-301-533.700 Plans

A complete plan and design for the pond is found in Volume 11 Appendix Volume - Hydrology: Appendix B. Total as-built volume of the sediment pond ~~is~~ was 1.71 ac. ft.. Sediment volume contribution from the disturbed area ~~is~~ was negligible (0.0716 ac. ft./yr.) especially when the sediment basin is accounted for. The pond ~~will be~~ was cleaned of sediment when the depth of sediment reache~~s~~d 40% of the total volume of the pond or 7.4 feet in depth.

There ~~are~~ were no underground operations below this pond that could potentially impact the structure. The pond ~~will be~~ was utilized during the life of the mining operations and ~~will be~~ was removed at reclamation.

R645-301-534 Roads

Left Fork Rilda Canyon: The Left Fork Rilda Canyon Fan Access Road is approximately 1,150 feet in length. It follows the north side of the Left Fork of Rilda Canyon from the turnaround above the Rilda Canyon Portal Facilities to the Left Fork facility pad. The existing road/trail was upgraded to a gravel surfaced road with an average travel width of 11 feet an average grade of approximately 8%. The road was designed in accordance with recommendations from the surface management agency (Manti-LaSal National Forest).

Drainage control is provided by a ditch along the north side of the road. The ditch is armored with type L, D50 = 9" riprap at stations 3+36 to 6+55, 7+69 to 9+89 and 11+82 to 13+96 to comply with DOGM and Forest Service Stipulations (refer to Map 3-9B in Volume 5). Additionally, Map 3-9B, illustrates the typical rip rapped ditch installation. Flows in the ditch are controlled by rip rap. An 18" diameter CMP culvert carries the flow beneath the road and into the natural drainage system. Further information regarding drainage controls along the access road is found in Volume 3: Appendix VII, Surface Runoff Control Plan, prepared by Hansen, Allen & Luce.

~~The road and culverts will be removed during final reclamation from the site and the Forest Development Trail will be re-established. Refer to the Reclamation Plan for the Left Fork Rilda Canyon fan facilities in Volume 2, Part 4.~~

Note: The Left Fork Facility was completely demolished in February 2018. As reclamation earthwork operations for this site began in June 2018, the Trail Mountain Fire devastated the surrounding area, causing a cessation of operations. During the cessation, the Forest Service proposed to take full control of the Left Fork facility, including the access road west of the turnaround, from PacifiCorp and rebuild it as a sedimentation basin. Phase III bond release for the entire Left Fork facility west of the gate was granted by the Division on January 29, 2019. The Left Fork portal facilities are no longer within the Deer Creek Permit or disturbed areas.

Rilda Canyon Portal Facilities: Prior to the construction of the facilities pad, a portion of the Emery County Road #306 existed within the proposed boundaries of the Rilda Canyon Portal Facilities. This road runs approximately 3.0 miles from the Huntington Canyon road, Highway 31, to the turnaround area in the Left Fork of Rilda Canyon. It is owned and maintained by Emery County Special Service District No. 1. A portion of this road ~~has been~~ was temporarily restricted for public use in order to allow PacifiCorp to conduct mining and reclamation operations, which were completed in July, 2019. The restricted use area start~~s~~ed approximately 1/4 mile west of the cattle guard and extend~~s~~ed approximately 2,300 feet to the mine gate in the left fork of Rilda Canyon (refer to Figure R645-301-500c). There is no longer a restriction on the County Road.

As this restricted use area cut~~s~~ off public access to the Forest Service trail system in the canyon, PacifiCorp ~~has~~ entered into an agreement with Emery County (Agreement #1) to construct a new trailhead and parking area east of the mine facilities. PacifiCorp established a trail that by-passe~~s~~d the mining facilities and connect~~s~~ed into the existing Forest Service trail system. Upon reclamation, the trail ~~will be left in place~~ was eliminated and the road ~~will be~~ relocated to its original location. (Refer to original design of road in Volume 11 Appendix Volume - Engineering: Appendix G). (The Trail Mountain Fire of June, 2018 burned the forest surrounding the trail. Fire-fighting efforts and drainage reconstruction activities in the Rilda Canyon drainage effectively obliterated the trail. Completion of the reclamation of the Rilda Canyon portal site and restoration of the County road have eliminated the need for the trail.)

All roads associated with the Rilda Canyon Portal Facilities ~~have been~~ were designed to ensure environmental protection and safety appropriate for their planned duration and use, including

consideration of the type and size of equipment used. The design and construction of the roads incorporate appropriate limits for surface drainage control, culvert placement, culvert size, and all design criteria established by the Division and Forest Service. Actual construction drawings, including plans for primary road construction, for the Rilda facilities were developed by Jones and DeMille Engineers and can be found in Volume 11, Appendix Volume 11A – Engineering, Appendix H. Safety factors that apply to the Hilfiker Retaining Wall are outlined in this appendix.

R645-301-535 Spoil

For a discussion on spoil of the Deer Creek Mine, refer to Vol. 2, Part 3 of the MRP.

R645-301-536 Coal Mine Waste

The Deer Creek Mine ceased production in January 2015. The southern portion of the mine was separated (by the construction of the 3rd North cross-cut 138 seals) from the Mill Fork Area and the portals at the Deer Creek canyon facility. The Deer Creek portals were permanently sealed in April 2015. The Rilda Canyon portals were permanently sealed in December 2017. The Rilda Canyon portals have been backfilled, covered, and reclaimed. ~~The only active portion of the Deer Creek Mine is accessed through the Left Fork portals and Rilda Canyon Portal Facilities. Ventilation and water pumping activities are the only operations occurring in the North Rilda and Mill Fork areas of the underground mine.~~ Therefore this section is no longer applicable. All non-coal waste generated at the Rilda Canyon facilities has been removed; no waste will be produced in the future.~~will be handled as outlined in R645-301-528.330~~.

R645-301-537 Regraded Slopes

There will be no spoil or underground development waste used to regrade slopes to achieve approximate original contour. Slopes for the Rilda Canyon Portal facilities ~~will be~~ have been constructed using the rock, subsoil and topsoil material.

R645-301-540 RECLAMATION PLANS

~~Reclamation of the Left Fork Fan Facility is detailed in Volume 2, Part 4 of the Deer Creek MRP.~~

Note: The Left Fork Facility was completely demolished in February 2018. As reclamation earthwork operations for this site began in June 2018, the Trail Mountain Fire devastated the area, causing a cessation of operations. During the cessation, the Forest Service proposed to take full control of the Left Fork facility from PacifiCorp and rebuild it as a sedimentation basin. PacifiCorp agreed to this proposal. Phase III bond release for the entire Left Fork facility west of the gate was granted by the Division on January 29, 2019. The Left Fork portal facilities are

no longer within the Deer Creek Permit or disturbed areas. Reclamation plans for the Left Fork facility will be removed from Volume 2, Part 4 of the Deer Creek MRP.

The reclamation of the Rilda Canyon Portal Facilities is detailed in the following sections.

Note: Demolition of the Rilda Canyon portal facilities was completed in July 2018. Earthwork operations for reclamation began in September 2018 after delays caused by the Trail Mountain Fire. Reclamation of the site was completed in June 2019.

R645-301-541 General

As required by R645-301-540, the applicant intends to conduct final reclamation as follows (Items 1 through 7 have been completed as of June, 2019):

1. Provide for a mine water drainage system.
2. Remove existing structures.
3. Remove buried diversion systems, where necessary, and provide 100yr/6hr storm event channels.
4. Re-contour the disturbed area to blend in with the existing surroundings.
5. Stabilize all fill structures.
6. Reconstruct Emery County Road #306
7. Reduce sediment loading to receiving streams by incorporating Best Management Practices (BMP's).
8. Vegetate all disturbed areas to meet minimum requirements of plant cover, diversity and production as compared to the reference areas.
9. Meet the stated post-mining land use.
10. Achieve bond release.

R645-301-541.100 Mine Closure

At the completion of mining and prior to sealing portals at the Right Fork facility, PacifiCorp ~~must address~~ addressed the issues related to the management of intercepted ground waters. A permanent post-mine gravity drainage system ~~is proposed~~ was constructed at the Deer Creek portals (completed May 2015) and at the North Rilda Canyon Right Fork portals (completed December 2017). Design for the Deer Creek portal seals is found in Volume 2. ~~These facilities were constructed in May 2015.~~ The design for sealing the Right Fork portals is found in the Figures Tab as Figure R645-301-500d. Diversions have been constructed inside the mine workings to ensure all ground water is diverted to the portals. Screens and rock check dams will be used to filter out debris from plugging the French drain system (see figure R645-301-500d) in each of the portals. Mine water drainage quality and quantity is better described in the Hydrology Section of Volume 12. The design of the drainage facility at the Right Fork portals is described below.

It is projected that intercepted water will naturally flow out of the Right Fork portals. However, a discharge permit cannot be issued for the Right Fork portals because the portals are located within a Category 1 Water Designation (see definition in UAC R317.2). Therefore, appropriate

management of the intercepted ground water must be established to allow for the mine to cease operations and seal the mine.

PacifiCorp originally proposed to build water-retaining bulkheads inside the mine to contain all of the intercepted ground water in the underground workings in perpetuity. However, those efforts (since late 2014) were rejected by the Mine Safety and Health Administration (MSHA) and DOGM in April 2016. The rejection of those plans required PacifiCorp to develop alternative plans to manage intercepted ground water and allow this water to drain from the Right Fork portals.

To comply with state and federal policy and regulation, PacifiCorp ~~proposes to~~ constructed a 5.6 mile 10 inch high-density polyethylene (HDPE) gravity flow water pipeline from the North Rilda Canyon Right Fork portals to the Raw Water Pond at the Huntington Power Plant. The pipeline ~~will be~~ was constructed within the existing Emery County Road #306 right of way for 12,553 feet (2.4 miles), and within the State Route (SR-31) right of way for 14,537 feet (2.8 miles). ~~This activity could temporarily disrupt up to approximately 12 acres (pipeline route + proposed treatment plant area + laydown areas). However, b~~Because the pipeline will remain installed in perpetuity, no reclamation is planned for this structure. Any minor disturbance that occurs as a result of this project will be immediately remediated. The pipeline corridor ~~will be~~ is located within the Deer Creek Mine permit area (see permit description in Appendix G of the Legal/Financial Volume).

Flow meters ~~will be placed~~ are located on each end of the pipeline (see design) for flow comparison and leak detection. Vent pipes ~~will be~~ are placed strategically along the pipeline to ensure no vapor locking occurs and water continues to flow freely. A tee ~~will is planned~~ near the raw water pond ~~and~~ may be used to redirect the water to the Huntington River ~~when~~ if the quality allows a discharge into Huntington Creek ~~and approval is granted~~ as approved by the Utah Division of Water Quality (UDWQ) through the Utah Pollution Discharge Elimination System (UPDES). ~~At the time of this writing, the UDWQ is in the process of determining water quality limitations and parameters for monitoring. Monitoring of those parameters shall be made at this location.~~ A modification to the Deer Creek UPDES permit was approved on December 1, 2017 adding the Huntington Creek discharge point (Outfall 003) to the permit.

R645-301-541.300 Structure Removal

Following the completion of sealing the mine and constructing the pipeline, work ~~will begin~~ was completed on the demolition of surface facilities. All structural steel, metal siding and other building materials except concrete ~~will be~~ were dismantled and disposed of off the permit area. These structures included, but ~~are~~ were not limited to:

- Fan and fan housing
- Fuel storage tank
- Substations
- Oil storage tank
- Fences
- Covered Storage Bins
- Rock dust silo

- Coal and Non-Coal Waste Bins
- Facilities Pad and MSE Wall

All foundations and structures built of concrete ~~will be~~ were broken up and buried on-site~~, permanently stored underground, or taken to the waste rock site for disposal~~. There is approximately 3,046 cy of in-place concrete at the Rilda Canyon Portal Facility. It is estimated that the density for in-place concrete is approximately 150 lbs/ft^3. For crushed concrete, the estimated density is approximately 110 lbs/ft^3. The volume of crushed concrete increases the volume of in-place concrete about 27%. Using these density estimates, the volume of concrete to dispose at the Rilda Canyon Portal Facility ~~will be~~ was approximately 3,868 cy. ~~Any~~ All excess demolition material ~~will be~~ was used to backfill the portals and used as fill material at the bottom of the cut area of the mine pad~~or taken to the waste rock site for disposal~~. All asphalt material from the disturbed area ~~will be~~ was excavated and taken to a permitted class IV landfill. For cut and fill quantities, refer to Table 500-1 above and R645-301-553 and Map 500-4 for cross-sections.

R645-301-542 Narratives, Maps, and Plans

A detailed timetable for the completion of each major step in reclamation is outlined in R645-301-300: Biology, Table 300-5. Pre-reclamation surface configurations for the Rilda Canyon Portal Facility are located on Maps 500-3 and 500-4. These drawings show the location and extent of surface disturbances due to coal mining and reclamation activities at the portal facility. A detailed plan for backfilling, soil stabilization, compacting and grading is outlined below in R645-301-553, Backfilling and Grading. Certified contour maps, cross-sections, and soil placement maps can be found in the map sections of this volume.

R645-301-542.600 Roads

Emery County road #306 within the area of the surface facilities will be reconstructed as part of the post mining land use. The road ~~will be~~ has been replaced in the approximate original location that it existed prior to the construction of the facilities area. The road ~~will be~~ was reconstructed as per the designs of Emery County Special Service District #1, Change Order No. 1, November 1994, and revised in 2019. These designs are the property of Emery County. A copy can be reviewed in Volume 11 Appendix Volume - Engineering: Appendix G. The mine water drainage pipeline below the mine site ~~shall be~~ was constructed on the north shoulder of the County R~~r~~oad and crossed to the south side of the road just below the cattle guard at the turnaround (refer to design in Volume 11 A, Appendix Volume, Engineering Section, Appendix I). All sections of the pipeline below the mine site ~~will be~~ have been confined to the boundaries of the county and state road ROW's. All drainage structures under the reconstructed portion of the road ~~will be~~ have been replaced. Sediment control will be that control stated in R645-301-552, Permanent Features and R645-301-553.100, Disturbed Areas.

R645-301-550 RECLAMATION DESIGN CRITERIA AND PLANS

Reclamation activities at the Rilda Canyon Portal Facility ~~will~~ include plans and designs for 1) Casing and sealing of portals, 2) Permanent features, and 3) Backfilling and grading. These plans and designs are outlined below.

R645-301-551 Casing and Sealing Underground Openings

The Rilda Canyon Portal Facility has~~s~~d a total of two (2) portals of which one (1) ~~is~~ was a blowing fan installation and one (1) was a roadway portal. These portals are located on the surface facility map, Map 500-3. The plan for sealing these portals consist~~s~~ed of a permanent, plug-type 25-foot thick concrete seal with at least 25 feet of non-combustible material compacted, to the extent possible, to form an earthen plug (see Figure R645-301-500d in the Figures Section). These plugs were completed on January 5, 2018.

As mining ~~is~~ was completed and the mine ~~is~~ closed, PacifiCorp ~~will~~ found the need to manage the intercepted mine water that emanates from the northwest ~~and east~~ ~~ends~~ area of the Mill Fork ~~Area~~ workings. Because of the lower elevation of the portals at the Rilda Canyon Portal Facility drainage from the Mill Fork Area workings will flow toward these portals.

PacifiCorp attempted to manage the anticipated intercepted water by designing and planning to install water-retaining bulkheads to contain all of the intercepted groundwater in the underground mine workings in perpetuity. Efforts undertaken beginning in late 2014 to obtain permission from the Mine Safety and Health Administration (MSHA) and the Division to ~~permanently retain intercepted groundwater underground with~~ install concrete bulkheads to permanently retain intercepted groundwater underground and possibly to direct overflow water to the Deer Creek Canyon were rejected in April of 2016. MSHA and the Division ~~will~~ would not allow any water retention underground as part of the Deer Creek closure plans; therefore, water must be directed to the portals to flow unimpeded out of the mine. This response by the agencies ~~necessitates that~~ forced PacifiCorp develop other alternative~~s~~ to manage intercepted groundwater that would otherwise discharge from the Rilda Canyon portals in violation of Utah Annotated Code R317-2 of the water quality regulations.

PacifiCorp ~~is~~ has now ~~planning and preparing~~ prepared for the intercepted mine water to drain from the portals at the Rilda Canyon Portal Facility in compliance with Utah Coal Regulations of R645-301-731.521. ~~And,~~ In order to be compliant with the Antidegradation Policy criteria, the mine discharge water may not be discharged into the Category 1 waters of Rilda Canyon. ~~Therefore, b~~Because of this criteria and concerns for the water quality of the discharge, PacifiCorp ~~is proposing to~~ collects the mine water drainage at the portals and transports it via a buried pipeline to the Huntington Power Plant and consumes it as part of the electric generation process~~es~~. For a more detailed discussion of the quantity and quality of the mine discharge, refer to Volume 12, Hydrology Section.

Figure R645-301-500d includes a French drain ~~designed~~ constructed behind each of the portal plugs for collection of mine water drainage. Each portal entry design includes two (2) 100 foot long perforated 14" dia. HDPE pipes installed and includes a safety overflow system. The perforated pipe ~~will be~~ was covered with 3 feet of 4"- 6" drain rock. Two solid 14" dia. HDPE pipes ~~will be~~ were installed through ~~the~~ each portal plug connecting the French drain system to the drain pipe (refer to the design drawing in Figure R645-301-500d in the Figures Section). A third 6" drainage pipe extends from the end of the 1st Right Rock Rooms at XC-52 through a horizontal borehole to the vault where it joins the main drain pipe. The drain pipe ~~will~~ transfers all mine water drainage down and adjacent to the Emery County road #306 to Highway 31. Along Highway 31, the pipeline ~~will be~~ was installed adjacent to the road ~~and be~~ routed to the diversion bridge at the Huntington Power Plant. The pipeline ~~will~~ crosses the bridge and ~~be~~ is routed to the Raw Water Pond where it will be utilized in the generation of electricity. The design of the pipeline is found in Volume 11A Appendix Volume – Engineering, Appendix I.

~~The e~~Earthen plugs ~~will~~ extend out of the portals and ~~be~~ are graded to match the topography that existed prior to mining and reclamation activities in this area. There are no highwalls associated with the Right Fork portals. No coal seam has been exposed. All concrete and

asphalt materials that ~~are~~ were crushed and removed from the pad areas, storage bunkers, roads, etc. ~~will be~~ were permanently disposed of on-site or transported to an approved landfill. Compliance to MSHA requirements for ventilation ~~will be~~ were followed during this backfilling activity. Backfilling and grading of the portals and mine site is detailed below.

R645-301-552 Permanent Features

Small depressions (pocks) ~~will be~~ have been constructed to retain moisture, minimize erosion, create and enhance wildlife habitat, and assist revegetation. The pocks ~~will be~~ were constructed with a track-hoe ~~or similar machinery~~ and placed in random order. The pocks will measure approximately 1.5 feet deep by 3.0 feet in diameter. Pocking techniques and sediment loss is explained in detail in the Soil and Hydrology sections.

R645-301-553 Backfilling and Grading

Once the structures ~~have been~~ were removed and the portals sealed as outlined in Figure R645-301-500d, backfilling and grading will commence. Reclamation ~~will be~~ was accomplished by systematically reclaiming the Rilda Canyon Portal Facility starting at the uppermost part of the disturbed area, working down. Prior to initiating the backfilling and grading process at the facility area, the entire area ~~will~~ was ripped with a dozer to a depth of approximately two feet to reduce soil compaction. Various stages of the reclamation process ~~may be~~ occurr~~ing~~ed simultaneously in different parts of the site. Working from top to bottom ~~will~~ minimized handling and compaction of the material in the reclaimed areas and allowed the sedimentation structures below the reclamation work to remain in place. Backfilling and grading the disturbed area of the mine site ~~will be~~ was conducted to achieve approximate original contour (AOC) of the entire site. At completion of backfilling and grading, the sediment pond ~~will be~~ was removed. The clay liner ~~will be~~ was disposed of on-site by ~~burying~~ burial at least four (4) feet below the final surface configuration. Recontouring ~~will be~~ was completed as detailed on Map 500-4. Cut/fill quantities are balanced as outlined in Table 500-2 below. Map 500-5 shows final reclamation topography of the entire mine site.

Table 500-2: Mass Balance of Cut/Fill Volume for Reclamation.**Faclilities*/Pond Area**		**Area (sf)**	**Volume (cy)**
1	Total Cut		25,553
2	Total Fill		6,762
Hard Armor Areas* **			
3	Hilfiker Wall	8,400	249
4	Boulder Pile	20,350	603
5	Sediment Basin Outslope	4,020	119
6	Sediment Pond Outslope	4,375	130
7	Total Volume to be Reduced from Cut		1,101
Topsoil Pile** **			
8	Total		7,000
Mass Balance Calculations			
	Total Cut (Items 1-7+8)		31,452
	Total Fill (Item 2)		26,762
	Difference		4,690
	% Difference*****		15%

NOTES:

* As-built volumes calculated utilizing aerial survey data and Carlson Software.

** Includes approximately 18,100 cy of imported rock material used during the construction of the Hilfiker wall. Imported material will be placed at bottom of all fill areas.

*** Boulders in these areas consist of a 40% void. Therefore, a 40% volume in this area (item 4) is subtracted from the total cut (item 1). Depth of the areas average 2ft.

**** ~~Approximately 10 inches of topsoil will be used to cover the topsoil pile footprint to aid in vegetation growth.~~ The entire topsoil pile footprint will be armored with rip-rap to protect against erosion that may result from impacts of the Trail Mountain Fire.

***** The excess 4,690 cubic yards will be used to provide additional topsoil depth throughout the site.

Note in the table above, the hard armored areas consist of an estimated 40% void space. This space is accounted for in Item 7 and is subtracted from the total cut in Item 1. The volume of the topsoil pile is added back in which gives an excess of 4,690 cubic yards of material. This additional material will be spread throughout the site to increase the depth (approximately 1 ½ inches) of the planting medium. Also note that only 7,000 cubic yards is utilized in the reclamation of the mine site when Table 500-1 showed a volume of 7,862 cubic. ~~Approximately 862 cubic yards will be utilized at the topsoil pile site to enhance the growth medium in this area. Depth of topsoil in this area will be approximately 10 inches.~~ To provide protection for springs above the topsoil storage area, Emery County will construct a berm diversion across the 0.51 acre site. The entire site will be hard armored and therefore will not require vegetation standards. Refer to the Emery County plans in Figure R645-301-500E. Discussion of this protection plan is found in R645-301-200: Soils, and R645-301-700: Hydrology.

Upon completion of backfilling and grading and topsoil placement, the entire area ~~will be~~ was pocked to minimize (or eliminate) erosion and sediment transport from the reclamation site. Pocks ~~will be~~ were constructed on slopes of 4:1 or greater using the bucket of a track-hoe or similar machinery to an approximately size of 3.0' diameter x 1.5' deep. Slopes flatter than 4:1 ~~will be~~ were roughened using a harrow or similar implement. ~~Reclamation of the soil placement area will be conducted as outlined in R645-301-200.~~

R645-301-553.100 Disturbed Areas

At time of mine closure, an additional permit and impact area ~~will be~~ was delineated for the mine drainage pipeline buried along the Emery County Road #306 and SR 31 and ending at the Huntington Plant raw water pond. An area (250' x 250') ~~will be~~ was set aside for a treatment facility in the unlikely event that the mine water drainage does not meet water quality standards and must be treated. In this case, PacifiCorp will construct a facility to treat the water to comply with ~~set~~ approved water quality standards in order to discharge into Huntington Creek. If this facility is constructed, a reclamation bond will be established to cover the cost for reclamation.

As for the reclamation of the mine site disturbed areas, all slopes ~~are~~ were planned for a 2:1 or less grade. All slopes ~~will be~~ were constructed to achieve a minimum long-term safety factor of 1.3 and will prevent unstable slopes. The vertical rock outcrop exposed by the initial portal development ~~will be~~ were ~~completely~~ eliminated to meet approximate original contour provisions. All slopes will be compatible with the post-mining land use of the area and will provide adequate drainage.

Since the sub-drainage areas in the reclaimed area are ephemeral and rarely receive flow, the drainage systems through the site ~~will be~~ have been armored with rock but not designed as a riprapped channel. Final surface configuration (Map 500-5) will channel any drainage that may occur from the undisturbed area through the reclaimed armored channels. Drainage will then be conveyed to road culverts (refer to Figure R645-301-500c for location) to direct flow beneath the EC#306 (see R645-301-542.600, Roads). Culvert outlets will extend beyond the south side of EC#306. Runoff will then flow overland through the buffer area for an average of approximately 50 feet before ~~contacting~~ joining Rilda Creek. Silt fences or other approved sediment control ~~will be~~ have been placed so that the disturbed runoff will be treated prior to entering the Rilda Creek. After two years of vegetation growth, these structures will be removed.

R645-301-553.130 Slope Stability Analysis

With the soil conditions, slope, and aspect being similar to that of the Des Bee Dove Mine site, the recommendations made by RB&G Engineering (refer to Des Bee Dove Mine, Appendix XIV, Phase 1 Reclamation, Engineering Section, Appendix C) for slope stability will be used for the Rilda Canyon Portal Facility reclamation. Their analysis assumed strength parameters for foundation fills and embankment fills. It was assumed that the foundation soils consisted of loose to medium dense granular fill extending to a depth of at least 10 feet below the existing level surface. A friction angle of 32° with zero cohesion

was conservatively assumed for this material. All reclaimed slopes should be equal to or less than 2 horizontal and 1 vertical.

Based upon the results of their analysis and experience in the compaction of similar material in the Phase 1 and Phase 2 Des Bee Dove Mine reclamation project, slope stability can achieve at least a 1.3 safety factor by compacting lifts not exceeding 1 foot in thickness a minimum of four passes with a rubber-tired dozer or sheepsfoot. The Geotechnical Study by AMEC Earth and Environmental Inc. (Volume 11 Appendix Volume - Engineering: Appendix F) concurs with RB&G recommendations. However, their recommendations use only two passes of construction, spreading, or hauling equipment.

No slope failures have occurred at the Des Bee Dove reclaimed site since completion in 2003.

The forest trail which was constructed in association ~~to~~ with the mine facilities and was eliminated during the time of the reclamation. ~~will left in place so that recreationalist can park at the existing trailhead below the cattle guard on the Emery County Road #306~~ (The Trail Mountain Fire of June, 2018 burned the forest surrounding this trail. Fire-fighting efforts and drainage reconstruction activities in the Rilda Canyon drainage effectively obliterated the trail. Completion of the reclamation of the Rilda Canyon portal site and restoration of the County road have eliminated the need for the trail.)

As a final step in reclamation of the Rilda Canyon portal facilities, the entire reclaimed area ~~will be~~ was seeded and hydromulched as outlined in the Biology Section.

R645-301-560 PERFORMANCE STANDARDS

Coal mining and reclamation operations have been and will be conducted in accordance with the approved permit and requirements of R645-301-510 through R645-301-553.

PacifiCorp

Deer Creek Mine

C/015/0018

Volume 11 North Rilda Portal Facilities

Volume 11 – Hydrology

Revise Pages iii, 1, 62, 63, 73, 75 and 76

LIST OF MAPS

(Refer to Volume 11: Appendix Volume B - Hydrology)

700-1 **Rilda Canyon Facilities**
Drainage Area Map, 1 of 1

700-2 **Rilda Canyon Facilities**
Mine Site Drainage Map, 1 of 1

700-3 **Rilda Canyon Facilities**
Sedimentation Pond, 1 of 1

700-4 **Rilda Canyon Facilities**
Reclamation Hydrology Map, 1 of 2, 2 of 2

~~**700-5** **Rilda Canyon Facilities**~~
~~**ASCA Location Map**~~

LIST OF APPENDICES
(Refer to Volume 11: Appendix Volume - Hydrology)

Appendix A **Response of Springs to Longwall Coal Mining at the Deer Creek and Cottonwood Mines, Wasatch Plateau, UT**

Appendix B **Drainage and Sediment Control Plan**

Appendix C **Rilda Canyon Geomorphology Investigation**

Appendix D **Rilda Canyon Spring Relocation Study**

Appendix E **Emery County/NRCS Plans for Runoff and Flow Protection Near NEWUSSD Spring Collection Area in Rilda Canyon.**

Note: The Deer Creek Mine ceased production in January 2015. The southern portion of the mine was separated (by the construction of the 3rd North cross-cut 138 seals) from the Mill Fork Area and the portals at the Deer Creek canyon facility. The ventilation portals at the 9th East breakouts were sealed and backfilled in April 2015. ~~The only active portion of the Deer Creek Mine is accessed through the Left Fork portals and Rilda Canyon Portal Facilities. Ventilation and water pumping activities are the only operations occurring in the North Rilda and Mill Fork areas of the underground mine. The 1st Right Fan was taken off-line in March 2015. The Left Fork fan is the only operating fan for the Deer Creek Mine. All information pertaining to the operations of the mine, coal recovery, mining methods, and subsidence control have been retained for a historic reference.~~ The 1st Right Fan was taken off-line in March 2015. The final sealing of the Rilda Canyon Right Fork portals consisted of first constructing a water drainage system inclusive of an in-mine collection gallery together with the construction and permanent placement of a buried water pipeline (10" HDPE pipe) from the Rilda Canyon Right Fork portal to the Huntington Power Plant raw water pond (approximately 6 miles). This pipeline project was completed in November 2017. The final Rilda Canyon portal sealing consisted of two 25-foot thick concrete portal plugs with water drains, one each in the 1st Right facility fan and roadway portals that were constructed on November 8 and 10, 2017, and high strength Strata panel portal seals, one each in the Left Fork facility fan and roadway portals completed on December 18 and December 20, 2017. The portal seals were constructed to meet or exceed regulatory requirements of 30 CFR 75.1711. (Phase III Bond Release for the Left Fork Portal Facilities was approved on January 29, 2019.) Final reclamation of the 1st Right Fan facility, including the sedimentation pond was completed June 2019. All information pertaining to the Cumulative Hydrologic Impact Area (CHIA), Probable Hydrologic Consequence (PHC), and the operations of the mine has been retained for a historic reference.

R645-301-710 INTRODUCTION

This application provides a detailed description of the hydrology, including groundwater and surface water quality and quantity, of the land within the permit and surrounding adjacent area (refer to Introduction: Figure 1, 2, and 3 of this Volume).

Since 1989 detailed data on the hydrology of the land within the permit and surrounding adjacent area have been collected, compiled and analyzed by PacifiCorp and several governmental agencies. Information collected by PacifiCorp is the result of exploratory drilling, field investigations, geologic mapping, aerial photography, spring surveys, groundwater tests, monitoring of numerous wells and stream stations, climatological monitoring, and investigations by independent consultants. The data collection program is part of a complete Hydrologic Monitoring Program which has been approved by the State of Utah, Division of Oil, Gas and Mining (DOGM) and the Office of Surface Mining (OSM). All data collected have been and will continue to be submitted to OSM, DOGM, United States Forest Service (USFS), and the Bureau of Land Management (BLM) each year in the annual Hydrologic Monitoring reports.

PacifiCorp has a policy of close cooperation with many agencies and has invited, encouraged, and permitted numerous agencies to conduct investigations and experiments within the permit and adjacent areas. The resulting information produced by these investigations is quite extensive and has been utilized throughout this application.

R645-301-711 General Requirements

711.100	Existing hydrologic resources as given under R645-301-720
711.200	Proposed operations and potential impacts to the hydrologic balance as given under R645-301-730
711.300	The methods and calculations utilized to achieve compliance with hydrologic design criteria and plans given under R645-301-740
711.400	Applicable hydrologic performance standards as given under R645-301-750
711.500	Reclamation activities as given under R645-301-750

645-301-731.200 Water Monitoring

Groundwater

Groundwater within the East Mountain mine plan area (including North Rilda area) will be monitored according to the schedules in Appendix A (refer to Volume 9 - Hydrologic Section). Monitoring equipment, structures used in conjunction with monitoring the quality and quantity of groundwater on-site and off-site will be properly installed, maintained, operated, and will be removed by PacifiCorp when approved by the Division.

Groundwater will be monitored and data will be submitted in an electronic format to the Division's Coal Water-Quality Database quarterly for each monitoring location. Monitoring subimittals will include analytical results from each sample taken during the quarter. When the analysis of any groundwater sample indicates noncompliance with the permit conditions, PacifiCorp will promptly notify the Division and immediately take actions provided for in R645-300-145 and R645-301-731.

PacifiCorp has conducted baseline and operational monitoring of the groundwater resources in and adjacent to the North Rilda mine plan area. The data collected have provided information useful in the understanding of potential hydrologic consequence of mining. Monitoring of the following groundwater resources will proceed through mining and continue during reclamation until bond release. Removal of the groundwater monitoring structures, *(Rilda Canyon piezometers)*, will be approved by the Division in conjunction with the Utah State Division of Water Rights.

A. *East Mountain Springs*: No springs will be undermined in the North Rilda area. Only two springs are within the North Rilda mine plan area, 80-50 located in Section 29 and the Rilda Canyon Springs located in Section 28 (refer to Volume 9 Map HM-9). Spring 80-50 will be monitored during the months of July and October (included in the East Mountain Spring Monitoring Program, refer to Volume 9 - Hydrologic Section: Appendix A). Rilda Canyon Springs will be monitored in cooperation with NEWUSSD on a monthly basis for flow and quarterly for quality. Parameters analyzed are those listed in the "DOGM Guidelines for Groundwater Water Quality" (refer to Volume 9 - Hydrologic Section: Appendix A).

B. *Rilda Canyon Springs - NEWUSSD:* One water sample will be collected and analyzed per location quarterly. Parameters analyzed are those listed in the "DOGM Guidelines for Groundwater Water Quality" (refer to Volume 9 - Hydrologic Section: Appendix A).

C. *Rilda Canyon Wells - NEWUSSD Spring Area:* Water level will be monitored on a monthly basis depending upon access (refer to Volume 9 - Hydrologic Section: Appendix A).

Note: All East Mountain springs, Rilda Canyon springs, and Rilda Canyon wells have been removed from the monitoring program after the closing of the Deer Creek Mine

Surface Water

PacifiCorp has conducted baseline monitoring of surface waters within and adjacent to the mine plan area (refer to Annual Hydrologic Monitoring Reports). Long-term monitoring sites in Rilda Canyon have been equipped with Parshall style flumes to facilitate monitoring. Monitoring equipment, structures used in conjunction with monitoring the quality and quantity of surface water on-site and off-site will be properly installed, maintained, operated, and will be removed by the PacifiCorp when approved by the Division. Water samples will be collected and analyzed quarterly (one sample at low flow and high flow) during the first or second week of the quarter. Parameters analyzed are those listed in the "DOGM Guidelines for Surface Water Quality." Locations of all surface monitoring sites and sampling schedules can be found in Appendix A (refer to Volume 9 - Hydrologic Section).

Surface water will be monitored and data will be submitted in an electronic format to the Division's Coal Water-Quality Database quarterly for each monitoring location. Monitoring submittals will include analytical results from each sample taken during the quarter. When the analysis of any surface water sample indicates noncompliance with the permit conditions, PacifiCorp will promptly notify the Division and immediately take actions provided for in R645-300-145 and R645-301-731. For point source discharges, monitoring will be conducted in accordance with 40 CRF Parts 122 and 123, R645-301-751 and as required by the Utah Division of Environmental Health for National Pollutant Discharge Elimination System permit.

R645-301-731.300 Acid and Toxic-forming Materials

To characterize the acid-forming potential of the strata encountered during mining, PacifiCorp collected samples of the immediate roof, mid-seam, and floor. All samples were analyzed by a certified laboratory according to the "Guidelines for Management of Topsoil and Overburden for Underground and Surface Coal Mining. Data collected and reported in R645-301-600 Geologic Section and Volume 11, Mill Fork Lease Geologic Section, reveals overburden encountered in the mine is non-acid/non-toxic forming; refer to R645-301-600 Geologic Section. As discussed in the R645-301-500 Engineering Section, all coal produced from the North Rilda/Mill Fork Area was transported to the facilities in Deer Creek Canyon. Under normal operations, waste rock encountered in the mine will be left in-place or transported to the Deer Creek Waste Rock Storage Site, refer to Volume 10 (now managed under a separate permit owned and controlled by ~~Bowie Refined Coals LLC~~ Castle Valley Mining LLC). In addition, a temporary containment area was designated at the Rilda Canyon Portal Facilities for incidental quantities of waste rock which was transported to the Deer Creek Waste Storage Site for final placement.

R645-301-731.400 Transfer of Wells

Before final release of bond, exploratory or monitoring wells will be sealed in a safe and environmentally sound manner in accordance with R645-301-631, R645-301-738, and R645-301-765. With the prior approval of the Division, wells may be transferred to

R645-301-746 Coal Mine Waste

An area designated for the disposal of coal mine waste and coal mine waste structures has been constructed and will be maintained to comply with R645-301-746 (refer to R645-301-500 Engineering Map 500-2 for the location coal mine waste temporary storage area). All coal mine waste generated at the Rilda Canyon Facility was disposed of at the Deer Creek Waste Rock Facility (now managed under a separate permit controlled and controlled by ~~Bowie Refined Coals LLC~~ Castle Valley Mining LLC).

R645-301-747 Disposal of Noncoal Mine Waste

747.100 Noncoal mine waste, including but not limited to grease, lubricants, paints, flammable liquids, garbage, machinery, lumber and other combustible materials generated during coal mining and reclamation operations will be placed and stored in a controlled manner in a designated temporary storage site and disposed of at a state-approved solid waste disposal area (refer to R645-301-500 Engineering Section Map 500-2 for the location of the non-coal waste storage site).

R645-301-750 PERFORMANCE STANDARDS

All coal mining and reclamation operations will be conducted to minimize disturbance to the hydrologic balance within the permit and adjacent areas, to prevent material damage to the hydrologic balance outside the permit area and support approved postmining land uses in accordance with the terms and conditions of the approved permit and the performance standards of R645-301 and R645-302. For the purposes of SURFACE COAL MINING AND RECLAMATION ACTIVITIES, operations will be conducted to assure the protection or replacement of water rights in accordance with the terms and conditions of the approved permit and the performance standards of R645-301 and R645-302.

R645-301-751 Water Quality Standards and Effluent Limitations

Discharges of water from areas disturbed by coal mining and reclamation operations will be made in compliance with all Utah and federal water quality laws and regulations and with effluent limitations for coal mining promulgated by the U.S. Environmental Protection Agency set forth in 40 CFR Part 434.

If the site receives a storm greater than the of the sediment pond, discharge from the sediment pond will be routed through the designed emergency spillway~~s~~ and into the Rilda Canyon Creek (refer to Volume 11 Appendix Volume - Hydrology: Appendix B). Discharge from the sediment pond would constitute an emergency situation and comply with State of Utah Department of Environmental Quality Division of Water Quality storm water regulations.

R645-301-754 Disposal of Excess Spoil, Coal Mine Waste and Non-Coal Mine Waste

Disposal areas, coal mine waste, and non-coal mine waste are located, maintained, constructed and will be reclaimed to comply with R645-301-735, R645-301-736, R645-301-745, R645-301-746, R645-301-747 and R645-301-760.

R645-301-755 Casing and Sealing of Wells

All wells will be managed to comply with R645-301-748 and R645-301-765. Each water well will be cased, sealed, or otherwise managed, as approved by the Division. There are no wells that currently exist in, or are planned to be installed within the Rilda Canyon Portal Facilities disturbed area.

R645-301-760 RECLAMATION

Note: PacifiCorp completed reclamation of the Rilda Canyon Portal Facilities in June 2019. Reclamation processes were conducted as outlined in the following plan. Variances may exist between plan and as-built conditions of the final grade and topography in the disturbed area. These differences are noted in the as-built maps that accompany this permit.

Earthwork operations for reclamation began in September 2018 after delays caused by the Trail Mountain Fire. Reclamation of the site was completed in June 2019.

The Trail Mountain Fire of June, 2018 created complicated third-party interference issues within the existing disturbed area boundary of the Rilda Canyon Portal Facilities. Certain sections of the disturbed area will now be removed from the permit because of these interferences.

The fire itself created the issue of potential off-site runoff from burn areas entering the disturbed area. The need for an additional engineered drainage became evident after the fire when muddy burn scar runoff water entered the disturbed area from a small drainage on the north side that had never brought water into the site before the fire.

The fire ignited abandoned coal piles and waste at the old Helco Mine site immediately adjacent to the topsoil storage area. These fires burned in the ground for over a year before being extinguished in July 2019. This incident caused the need for the Utah Abandoned Mine Lands Division to initiate a project to extinguish the fires that had the potential to smolder and reignite resulting in a public safety hazard.

The North Emery Water Users Special Service District (NEWUSSD) operates a spring collection system that straddles the stream bed between the portal site and the topsoil storage site. Within a few days after the fire was extinguished, mudflows from the burn scar passed through the spring collection site, damaging the collection infrastructure. Efforts to protect the springs from further damage were launched immediately, including building a temporary diversion structure in the creek and small canal to divert flows around the springs. These efforts have caused impacts to the disturbed area of the Rilda Canyon Portal Facilities and topsoil storage area..

In the immediate aftermath of the fire, crews from the Forest Service began to modify the stream beds in Rilda Canyon by felling burned trees and using existing downed trees to construct sedimentation structures in the stream beds, as well as building earthen dams, ditches, and diversion structures. In order to gain access to the stream bed for the spring system protective measures, heavy excavation equipment was driven across the Rilda Canyon Portal Site disturbed area in various locations, rocks and earth to be used in sediment control structures was staged within the disturbed area and left after the construction was completed. For this reason, PacifiCorp is asking that the Rilda Canyon Portal Site disturbed area be reduced to exclude these damaged areas from the disturbed area.

Emery County, through funding by the Natural Resource Conservation Service (NRCS), has plans for constructing sediment control and diversion structures over the entire area of the 0.51 acre topsoil storage site (refer to Volume 11, Appendix Volume, Hydrology, Appendix E for plans and designs) These structures will help divert runoff and mudflows from Helco canyon away from the NEWUSSD spring area already mentioned. As the topsoil storage area is small (0.51 acres), this construction will essentially eliminate any further chance of reclamation efforts by PacifiCorp. No salvaged soils will be used in this location nor will final reclamation be performed. Therefore, since meeting the vegetation standards will not be required for this area, the Utah Coal Rules do not require a 10 year responsibility period.

Before abandoning a permit area or seeking bond release, the PacifiCorp will ensure that all temporary structures are removed and reclaimed, and that all sedimentation ponds, diversions, impoundments and treatment facilities meet the requirements of R645-301 and R645-302 for permanent structures, have been maintained properly and meet the requirements of the approved reclamation plan for permanent structures and impoundments. PacifiCorp will renovate such structures if necessary to meet the requirements of R645-301 and R645-302 and to conform to the approved reclamation plan. For complete discussion related to the reclamation plan for the Rilda Canyon Portal Facilities refer to R645-301-540 and Volume 11 Appendix Volume - Hydrology: Appendix B.

PacifiCorp

Deer Creek Mine

C/015/0018

Volume 11 North Rilda Portal Facilities

Volume 11 – Maps

Replace Maps – 500-1 (2 of 3), 500-3 (1 of 2, 2 of 2), 500-4 (1 of 4 thru 4 of 4), 500-5 (sheet 1), add 500-5 (sheet 2)

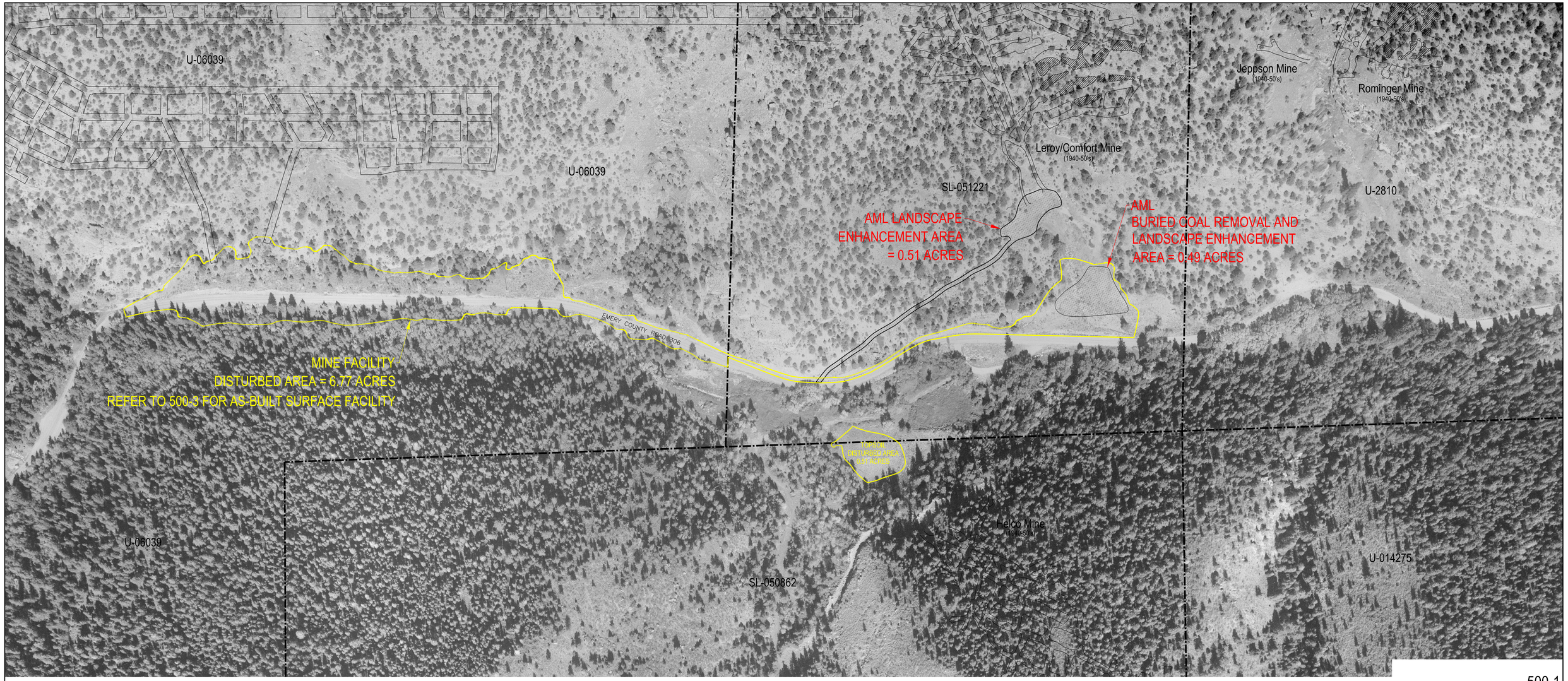

CAD FILE NAME/DISK#: 500-1 SHEET 2

500-1

PACIFICORP
A BERKSHIRE HATHAWAY ENERGY COMPANY

DEER CREEK MINE
RILDA CANYON
PRE-DISTURBANCE AERIAL

DRAWN BY: K. LARSEN
SCALE: 1"=100'
DRAWING #: 500-1
DATE: APRIL 16, 2010
SHEET 2 OF 3
REV. 2

DATE	REVISION	BY	CHK
8/14/2019	REMOVE POST MINE GRAVITY WATER DISCHARGE LINE, ADDED TO 500-1 SHEET 4	CAS	
1/3/2017	ADDED POST MINING GRAVITY WATER DISCHARGE LINE	KJL	
2/4/2010	ADDED AS-BUILT DISTURBED AREA BOUNDARY AND AML LANDSCAPE ENHANCEMENT AREAS	KJL	

STATE OF UTAH
REGISTERED NUMBER
5254803-2200
KENNETH S. LEE
PROFESSIONAL ENGINEER

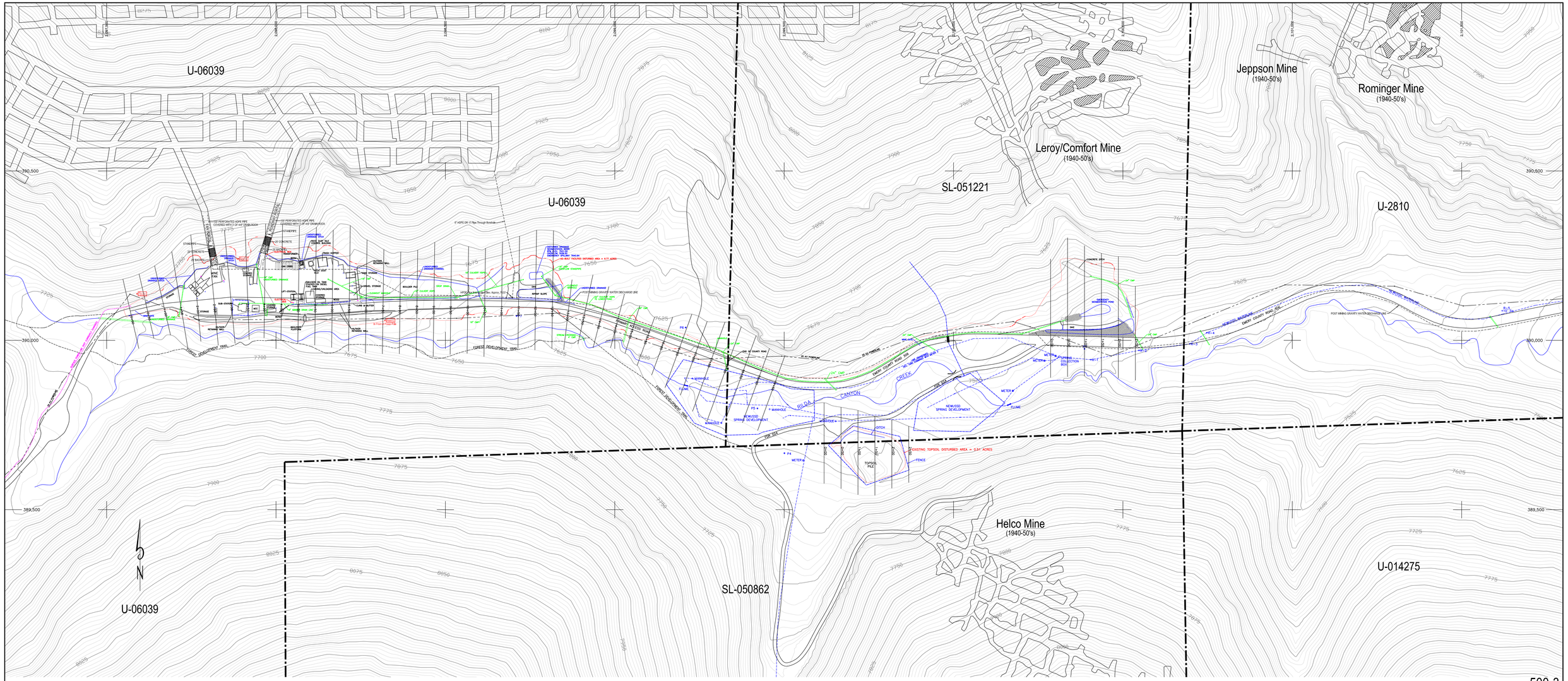

LEGEND

- BOLLARD
- JERSEY BARRIER
- LIGHT POLE
- POWER POLE
- DROP INLET
- CULVERT
- RIP RAP
- FENCE
- DIRT BERM

STATE OF UTAH DIVISION OF OIL, GAS & MINING — COMMISSION — 64 — ENGINEERING & FIELD OPERATIONS

DATE	REVISION	BY	CHK
12/1/2016	ADDED POST MINING GRAVITY WATER DISCHARGE LINE	KJL	
5/12/2010	CHANGED CULVERT NOTATIONS TO CMP	KJL	
2/15/2010	REVISED TO REFLECT THE AS-BUILT CONDITIONS, DISTURBED AREA BOUNDARY AND TOPOGRAPHY	KJL	

CAD FILE NAME/DISK#: 500-1 SHEET 1 500-3

PACIFICORP
A BERKSHIRE HATHAWAY ENERGY COMPANY

DEER CREEK MINE
RILDA CANYON SURFACE FACILITIES
AS-BUILT OPERATIONS 2013

DRAWN BY: K. LARSEN
SCALE: 1"=100'
DRAWING #: 500-3
DATE: JUNE 18, 2009
SHEET 1 OF 2
REV. 3

500-3

CAD FILE NAME/DISK#: 500-3 SHEET 2 AUGUST 13 2019.DWG

LEGEND

- BOLLARD
- JERSEY BARRIER
- LIGHT POLE
- POWER POLE
- DROP INLET
- CULVERT
- RIP RAP
- FENCE
- DIRT BERM

STATE OF UTAH
REGISTERED PROFESSIONAL ENGINEER
5234883-2200
KENNETH S. FLICK

PACIFICORP
A BERKSHIRE HATHAWAY ENERGY COMPANY

DEER CREEK MINE
RILDA CANYON SURFACE FACILITIES
AS-BUILT OPERATIONS 2013 AERIAL

DATE	REVISION	BY	CHK
8/13/2019	AS-BUUILT ORTHO PHOTOGRAPHY MAPCON SEPTEMBER 23, 2013	CAS	

DRAWN BY: C. SEMBORSKI
SCALE: 1"=100'
DATE: AUGUST 13, 2019
DRAWING #: 500-3
SHEET 2 OF 2
REV. 1

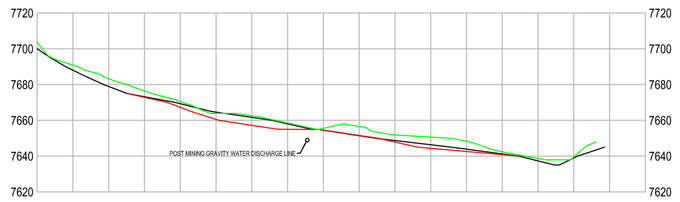

9+50

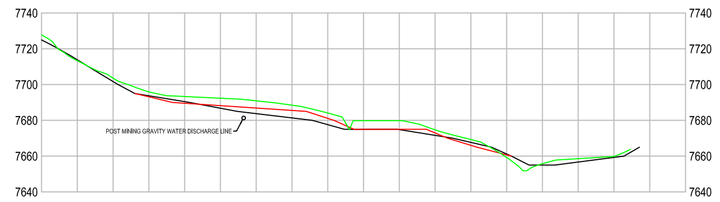

7+00

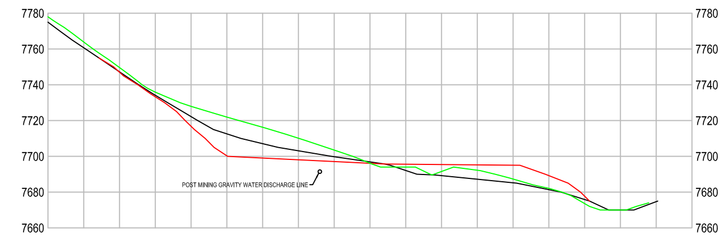

4+50

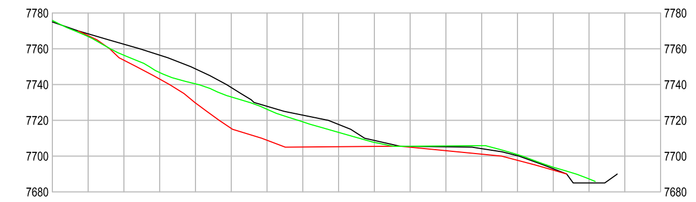

2+00

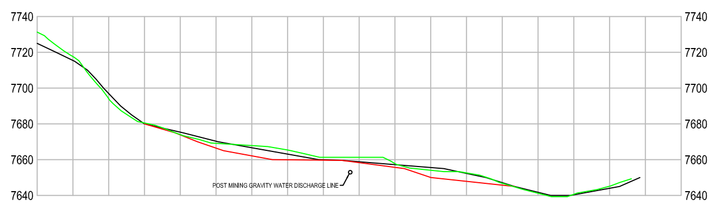

9+00

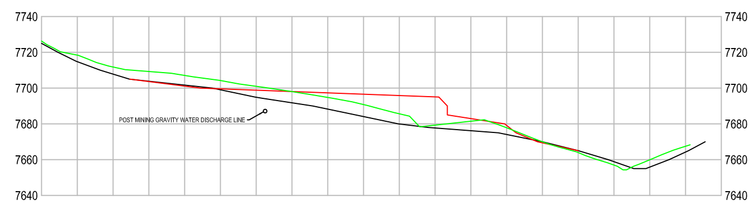

6+50

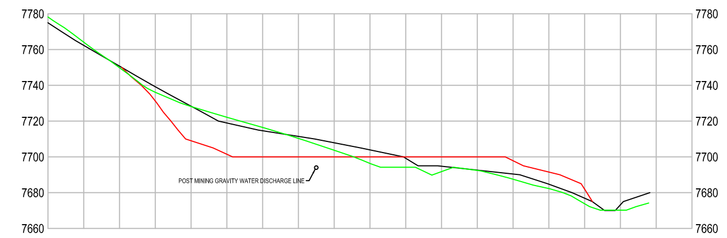

4+00

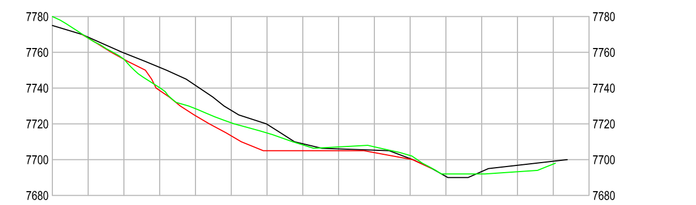

1+50

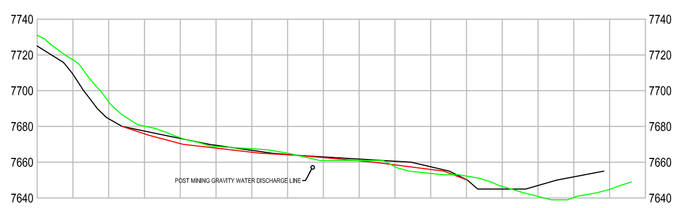

8+50

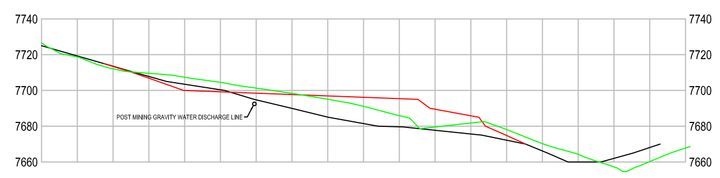

6+00

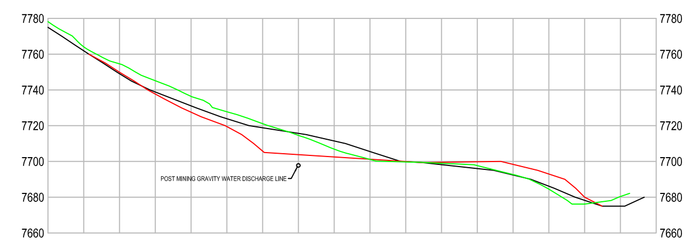

3+50

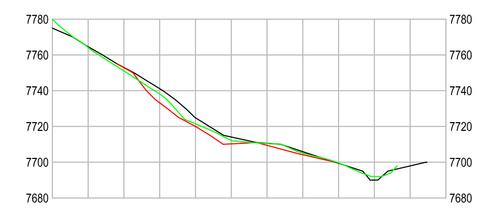

1+00

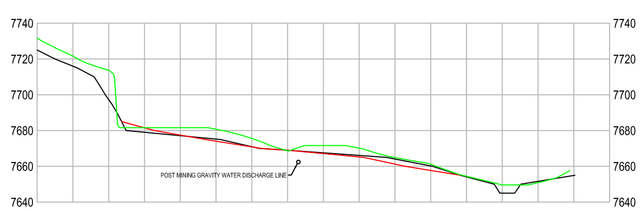

8+00

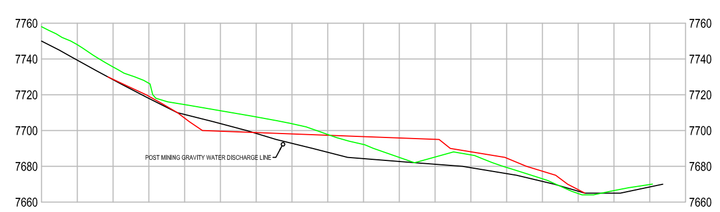

5+50

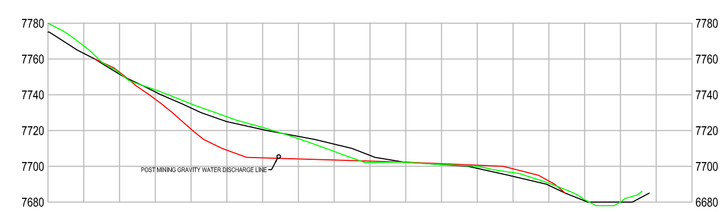

3+00

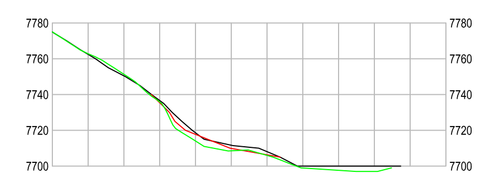

0+50

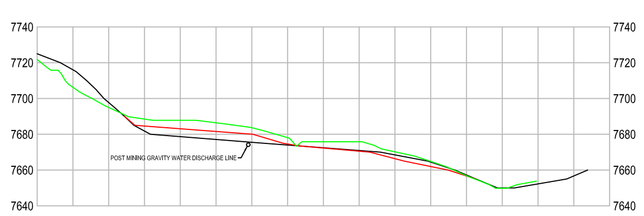

7+50

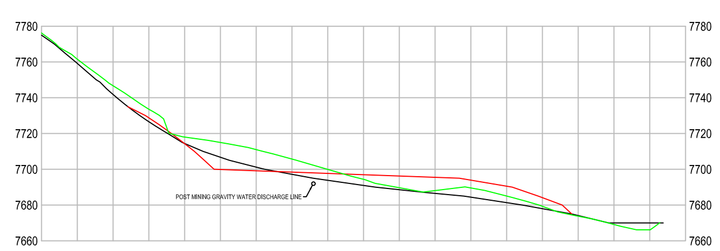

5+00

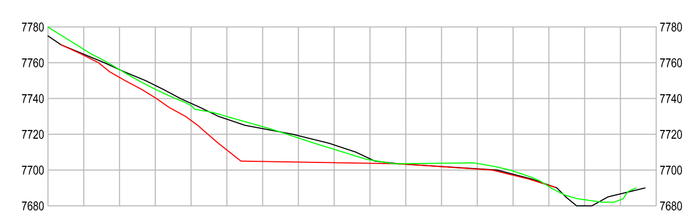

2+50

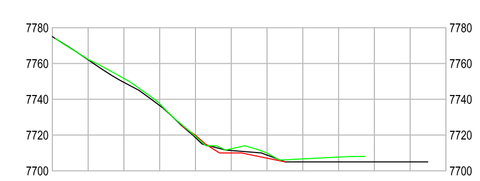

0+00

NOTES

1. CROSS SECTIONS REFERENCE FROM 500-5
2. REFER TO VOLUME 11 APPENDIX VOLUME ENGINEERING APPENDIX F FOR SLOPE STABILITY ANALYSIS
3. PRE-EXISTING AND POST CONSTRUCTION TOPOGRAPHY PROVIDED BY MAPCON, POST RECLAMATION BY AEROGRAPHICS
4. POST RECLAMATION TOPOGRAPHY HIGHER RESOLUTION THAN PREVIOUS SURVEYS AND LESS OBSCURED GROUND COVER DUE TO THE 2018 TRAIL MOUNTAIN WILDFIRE
5. RILDA CANYON DRAINAGE EFFECTED BY USFS EMERGENCY DRAINAGE CONTROL PROJECT - 2018

LEGEND

PRE-EXISTING LINE
POST CONSTRUCTION LINE
FINAL RECLAMATION LINE

STATE OF UTAH
REFERENCE NUMBER
5224883-2250
KENNETH S. FLECK
LICENSED PROFESSIONAL ENGINEER

DATE	REVISION	BY	CHK
8/16/2019	REVISED TO REFLECT POST RECLAMATION TOPOGRAPHY	CAS	
12/6/2016	ADDED POST MINING GRAVITY WATER DISCHARGE LINE	KJL	
2/19/2010	REVISED TO REFLECT THE AS-BUILT CONDITIONS	KJL	

500-4

CAD FILE NAME/DISK#: 500-4 SHEETS 1-4

PACIFICORP
A BERKSHIRE HATHAWAY ENERGY COMPANY

DEER CREEK MINE
RILDA CANYON FACILITIES
CROSS SECTIONS

DRAWN BY: K. LARSEN
SCALE: 1"=60'
DATE: MAY 9, 2016
DRAWING #: 500-4
SHEET 1 OF 4
REV. 2

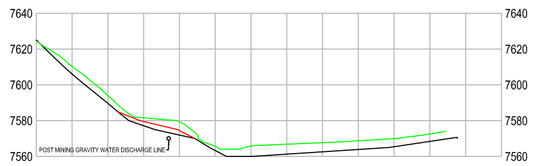

19+50

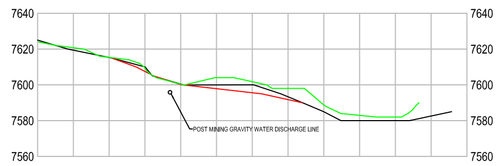

17+00

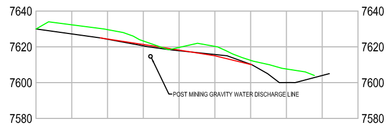

14+50

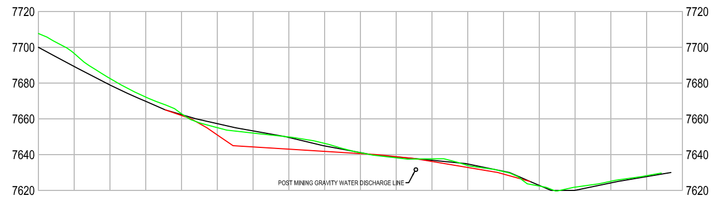

12+00

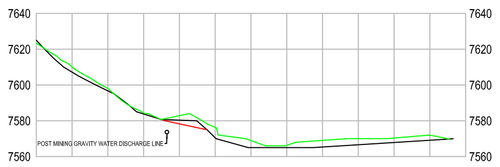

19+00

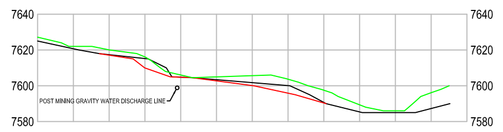

16+50

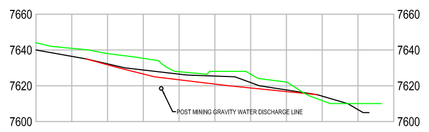

14+00

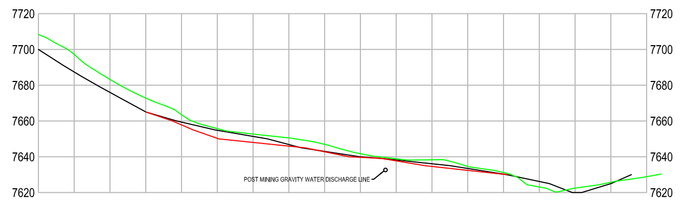

11+50

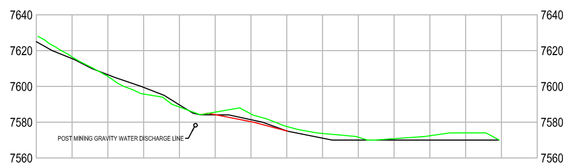

18+50

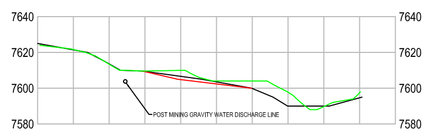

16+00

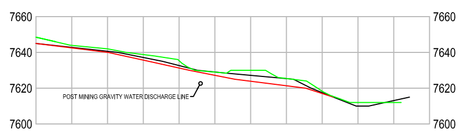

13+50

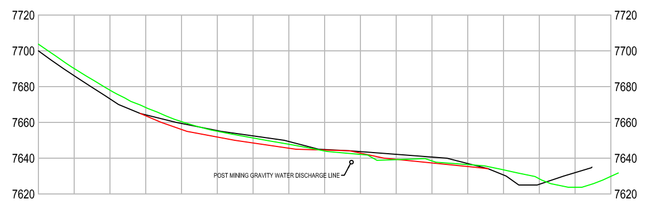

11+00

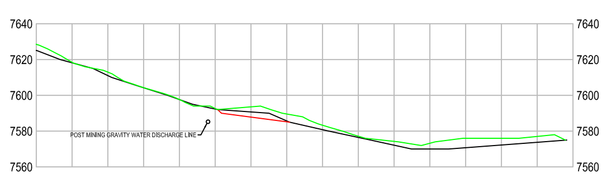

18+00

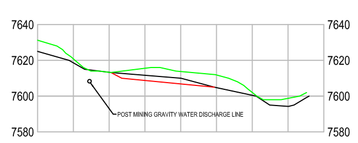

15+50

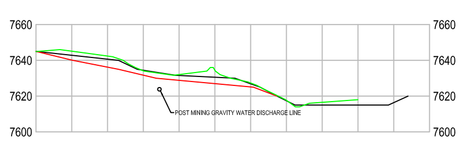

13+00

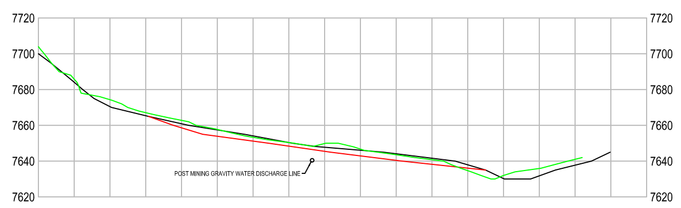

10+50

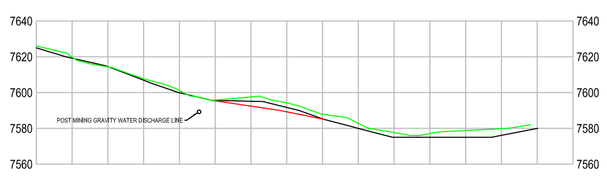

17+50

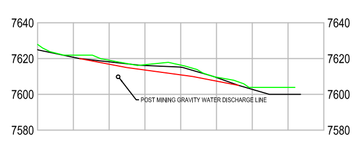

15+00

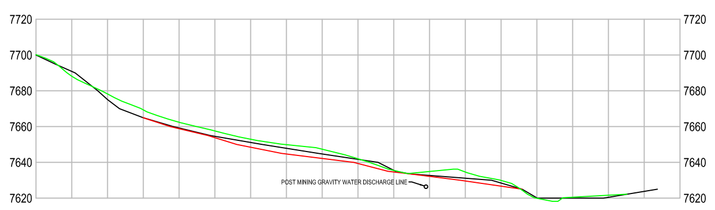

12+50

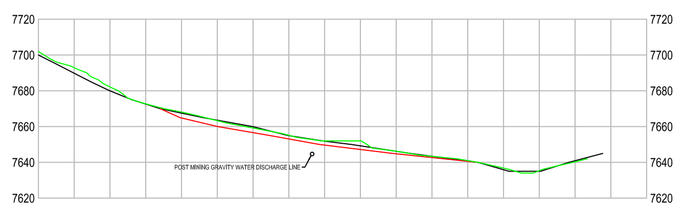

10+00

NOTES

1. CROSS SECTIONS REFERENCE FROM 500-5
2. REFER TO VOLUME 11 APPENDIX VOLUME ENGINEERING APPENDIX F FOR SLOPE STABILITY ANALYSIS
3. PRE-EXISTING AND POST CONSTRUCTION TOPOGRAPHY PROVIDED BY MAPCON, POST RECLAMATION BY AEROGRAPHICS
4. POST RECLAMATION TOPOGRAPHY HIGHER RESOLUTION THAN PREVIOUS SURVEYS AND LESS OBSCURED GROUND COVER DUE TO THE 2018 TRAIL MOUNTAIN WILDFIRE
5. RILDA CANYON DRAINAGE EFFECTED BY USFS EMERGENCY DRAINAGE CONTROL PROJECT - 2018

LEGEND

PRE-EXISTING LINE
POST CONSTRUCTION LINE
FINAL RECLAMATION LINE

STATE OF UTAH
REFERENCE NUMBER
5224883-2200
KENNETH S. FLECK
LICENSED PROFESSIONAL ENGINEER

DATE	REVISION	BY	CHK
8/16/2019	REVISED TO REFLECT POST RECLAMATION TOPOGRAPHY	CAS	
12/6/2016	ADDED POST MINING GRAVITY WATER DISCHARGE LINE	KJL	
2/19/2010	REVISED TO REFLECT THE AS-BUILT CONDITIONS	KJL	

500-4

CAD FILE NAME/DISK#: 500-4 SHEETS 1-4

PACIFICORP
A BERKSHIRE HATHAWAY ENERGY COMPANY

DEER CREEK MINE
RILDA CANYON FACILITIES
CROSS SECTIONS

DRAWN BY: K. LARSEN
SCALE: 1"=60'
DATE: MAY 9, 2016
DRAWING #: 500-4
SHEET 2 OF 4
REV. 2

PRE-CONSTRUCTION PHOTO - 2006
INDICATOR FABRIC IN-PLACE

POST RECLAMATION PHOTO - 2019
TOPSOIL REMOVED TO INDICATOR FABRIC

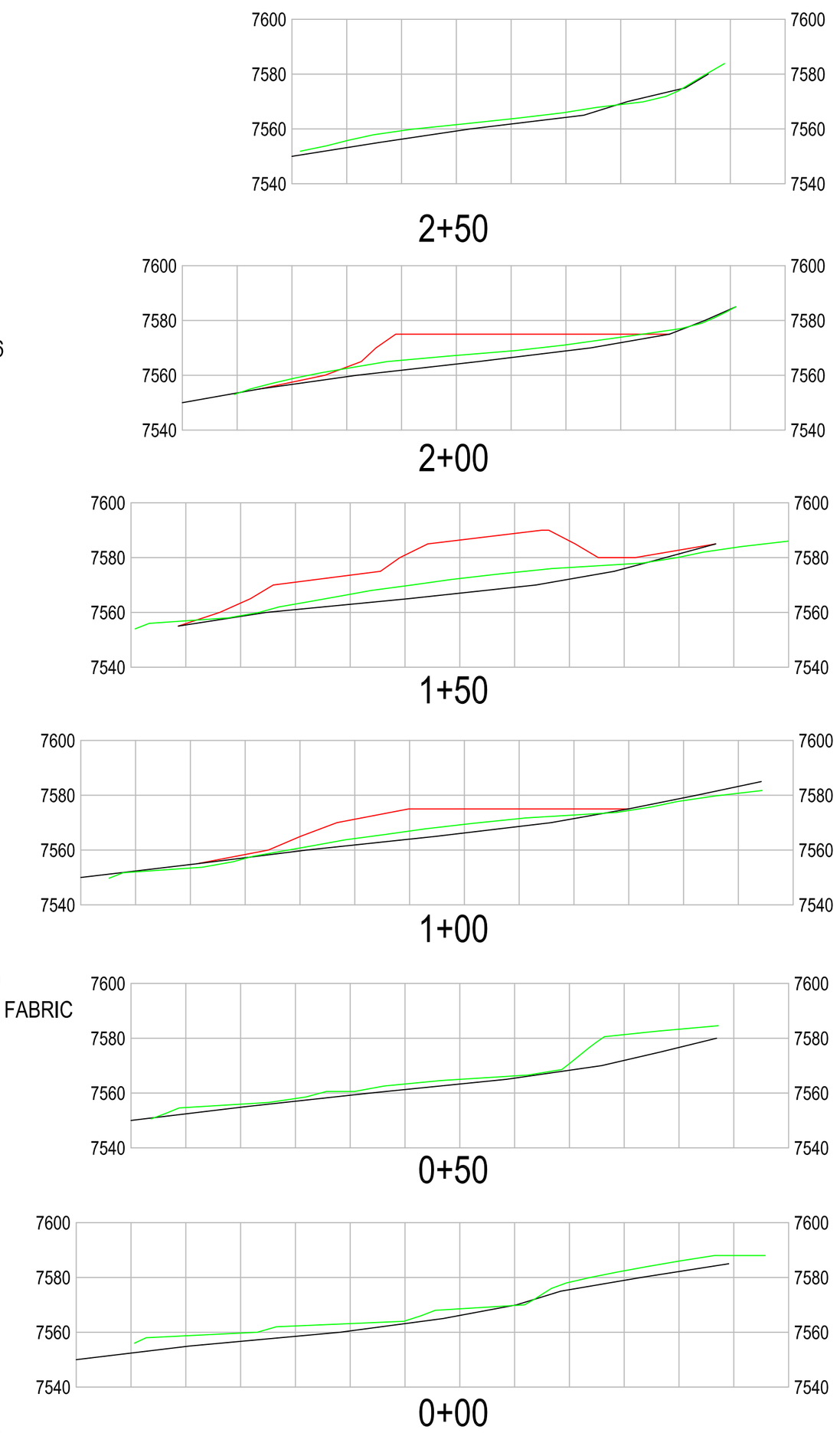

NOTES

1. CROSS SECTIONS REFERENCE FROM 500-5
2. REFER TO VOLUME 11 APPENDIX VOLUME ENGINEERING APPENDIX F FOR SLOPE STABILITY ANALYSIS
3. PRE-EXISTING AND POST CONSTRUCTION TOPOGRAPHY PROVIDED BY MAPCON, POST RECLAMATION BY AEROGRAPHICS
4. POST RECLAMATION TOPOGRAPHY HIGHER RESOLUTION THAN PREVIOUS SURVEYS AND LESS OBSCURED GROUND COVER DUE TO THE 2018 TRAIL MOUNTAIN WILDFIRE
5. RILDA CANYON DRAINAGE EFFECTED BY USFS EMERGENCY DRAINAGE CONTROL PROJECT - 2018

LEGEND

PRE-EXISTING LINE
POST CONSTRUCTION LINE
FINAL RECLAMATION LINE

STATE OF UTAH
REFERENCE NUMBER
5224883-2250
KENNETH S. FLECK
LICENSED PROFESSIONAL GEOLOGIST

500-4

CAD FILE NAME/DISK#: 500-4 SHEETS 1-4

PACIFICORP
A BERKSHIRE HATHAWAY ENERGY COMPANY

DEER CREEK MINE
RILDA CANYON FACILITIES
TOPSOIL STORAGE CROSS SECTIONS

DATE	REVISION	BY	CHK
8/16/2019	REVISED TO REFLECT POST RECLAMATION TOPOGRAPHY	CAS	
2/19/2010	REVISED TO REFLECT THE AS-BUILT CONDITIONS	KJL	

DRAWN BY: K. LARSEN
SCALE: 1"=40'
DATE: MARCH 25, 2009
DRAWING #: 500-4
SHEET 3 OF 4
REV. 1

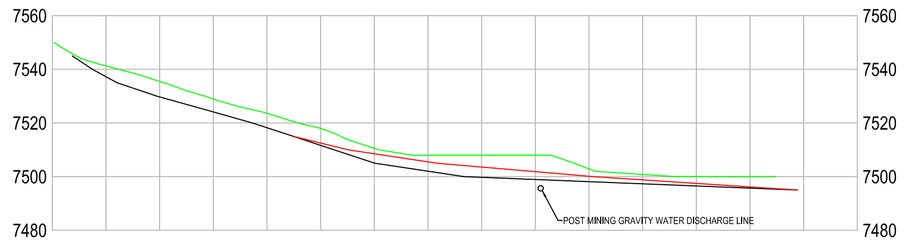

2+50

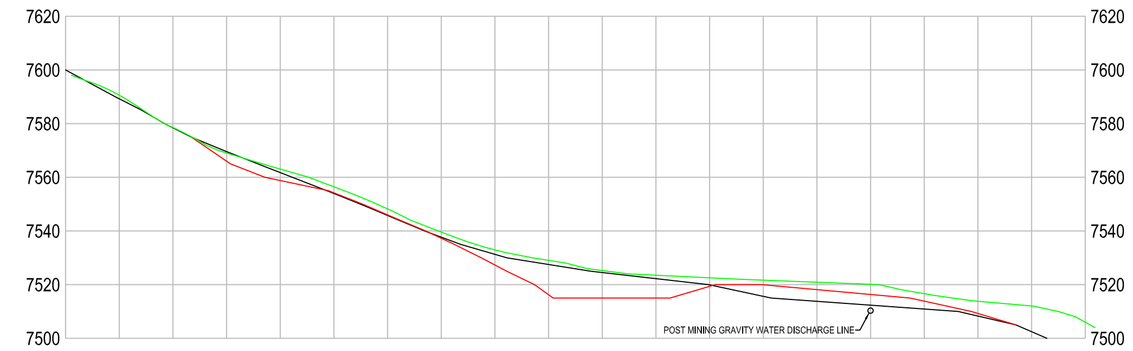

1+00

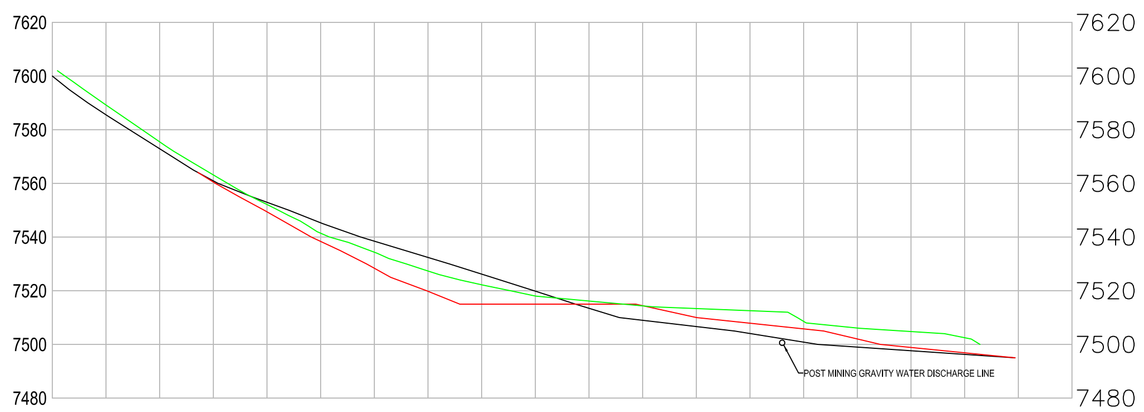

2+00

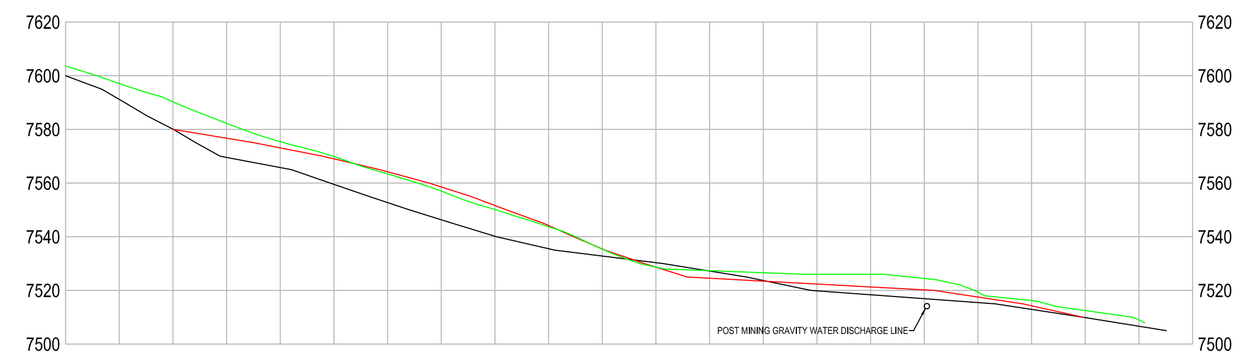

0+50

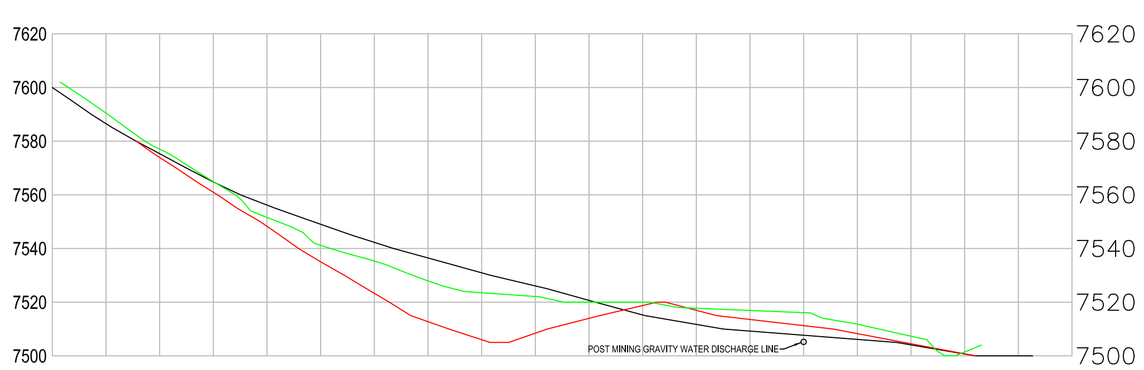

1+50

0+00

NOTES

1. CROSS SECTIONS REFERENCE FROM 500-5
2. REFER TO VOLUME 11 APPENDIX VOLUME ENGINEERING APPENDIX F FOR SLOPE STABILITY ANALYSIS
3. PRE-EXISTING AND POST CONSTRUCTION TOPOGRAPHY PROVIDED BY MAPCON, POST RECLAMATION BY AEROGRAPHICS
4. POST RECLAMATION TOPOGRAPHY HIGHER RESOLUTION THAN PREVIOUS SURVEYS AND LESS OBSCURED GROUND COVER DUE TO THE 2018 TRAIL MOUNTAIN WILDFIRE
5. RILDA CANYON DRAINAGE EFFECTED BY USFS EMERGENCY DRAINAGE CONTROL PROJECT - 2018

LEGEND

PRE-EXISTING LINE
POST CONSTRUCTION LINE
FINAL RECLAMATION LINE

STATE OF UTAH
REFERENCE NUMBER
5224883-2250
KENNETH S FLECK
LICENSED PROFESSIONAL GEOLOGIST

500-4

CAD FILE NAME/DISK#: 500-4 SHEETS 1-4

PACIFICORP
A BERKSHIRE HATHAWAY ENERGY COMPANY

DEER CREEK MINE
RILDA CANYON FACILITIES
SEDIMENT POND CROSS SECTIONS

DATE	REVISION	BY	CHK
8/16/2019	REVISED TO REFLECT POST RECLAMATION TOPOGRAPHY	CAS	
12/6/2016	ADDED POST MINING GRAVITY WATER DISCHARGE LINE	KJL	
2/19/2010	REVISED TO REFLECT THE AS-BUILT CONDITIONS	KJL	

DRAWN BY: K. LARSEN
SCALE: 1"=40'
DATE: MARCH 25, 2009
DRAWING #: 500-4
SHEET 4 OF 4
REV. 1

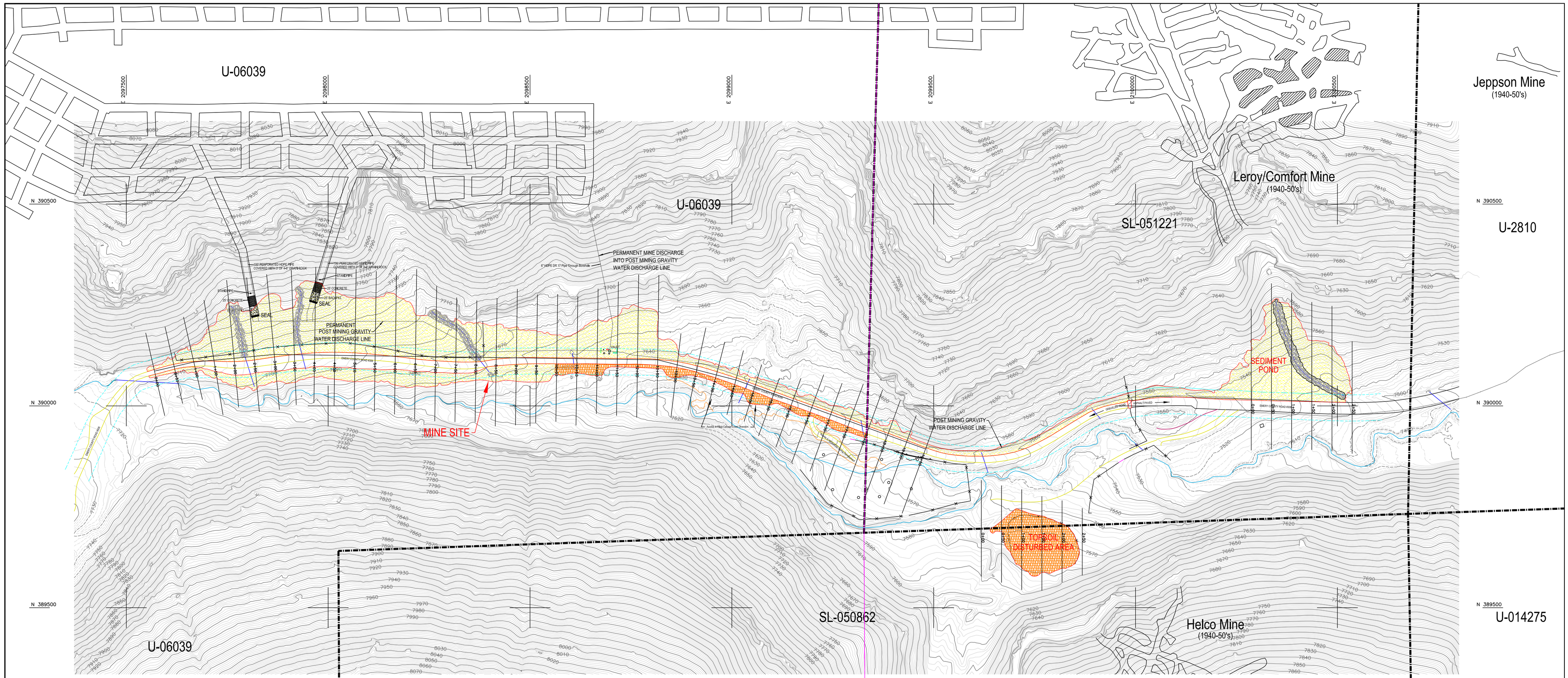

29

28

T. 16 S., R. 7 E.

DISTURBED AREA = 6.25 ACRES
INCLUDES:
- MINE SITE AND SEDIMENT POND = 5.74 ACRES
- TOPSOIL STORAGE SITE = 0.51 ACRES
EXCLUDES:
- RECONSTRUCTED EMERY COUNTY ROAD #306

PRE-DISTURBED AREA (AML RECLAIMED 1988)
OF THE 6.25 TOTAL DISTURBED ACRES, 1.79 ACRES ARE ON LAND PRE-DISTURBED BY HISTORICAL MINE SITES. THE PRE-DISTURBED LAND IS 28.6% OF THE TOTAL DISTURBED AT THE RILDA CANYON PORTAL FACILITIES.

LEGEND

- CULVERT
- RIP RAP / RECLAIMED CHANNEL
- FENCE
- DISTURBED BOUNDARY POST RECLAMATION
- USFS TRAIL MOUNTAIN WILDFIRE THIRD PARTY INTERFERENCE (0.79 Acres)
- EMERY COUNTY ROAD #306 RIGHT-OF-WAY
- ELEVATION PROJECTED – GROUND OBSCURED
- 0+00 CROSS SECTION BASELINE (REFER TO 500-4)

STATE OF UTAH
REGISTERED PROFESSIONAL ENGINEER
KENNETH S. FLECK
REFERENCE NUMBER
6224883-2250
6-8

CAD FILE NAME/DISK#: 500-5 SHEET 1 500-5

PACIFICORP
A BERKSHIRE HATHAWAY ENERGY COMPANY

DEER CREEK MINE
RILDA CANYON
POST RECLAMATION TOPOGRAPHY

DRAWN BY: C. SEMBORSKI	500-5
SCALE: 1"=100'	DRAWING #:
DATE: AUGUST 13, 2019	SHEET 1 OF 2 REV. ___

REVISION

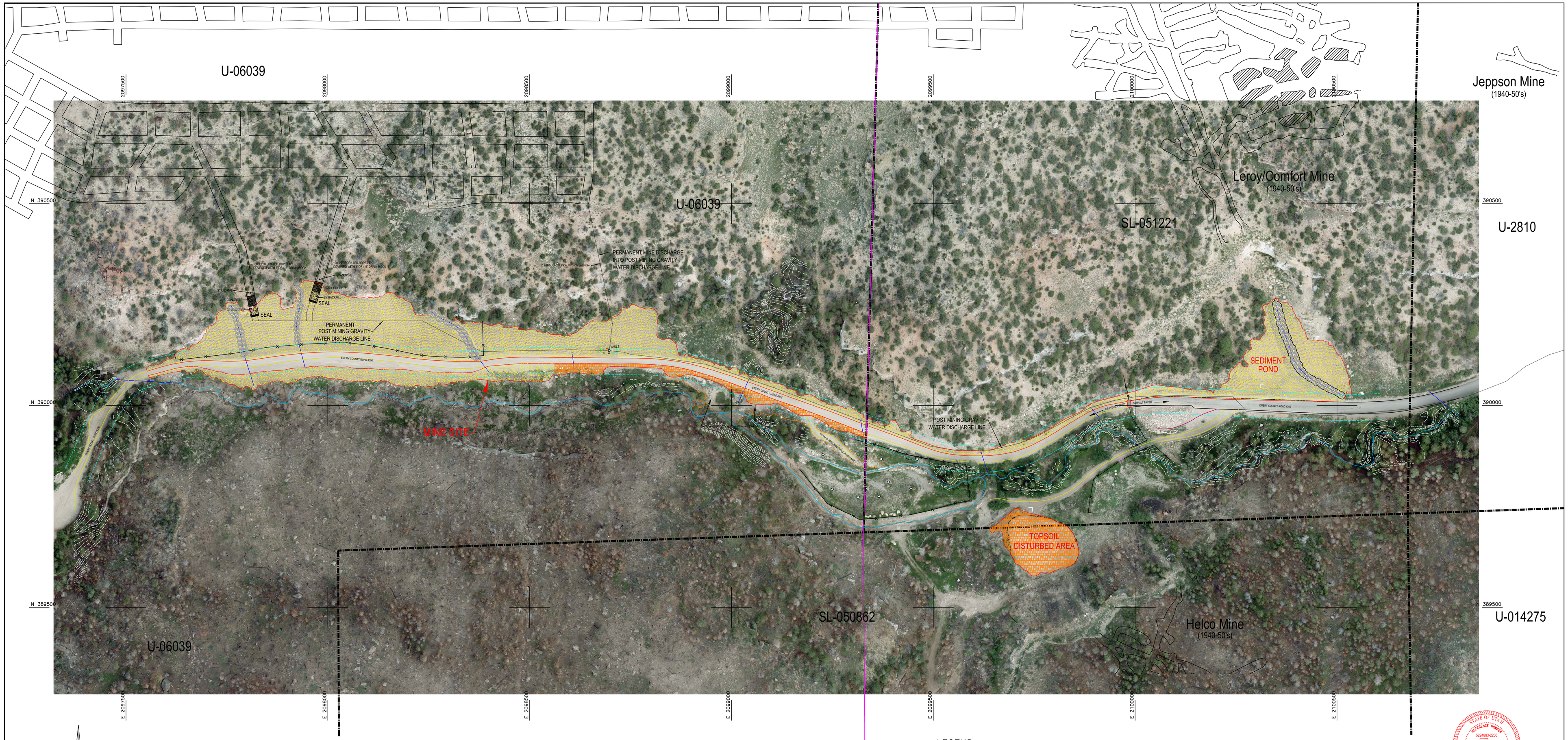

DISTURBED AREA = 6.25 ACRES
INCLUDES:
- MINE SITE AND SEDIMENT POND = 5.74 ACRES
- TOPSOIL STORAGE SITE = 0.51 ACRES
EXCLUDES:
- RECONSTRUCTED EMERY COUNTY ROAD #306

LEGEND
- CULVERT
- RIP RAP / RECLAIMED CHANNEL
- FENCE
- DISTURBED BOUNDARY POST RECLAMATION
- USFS TRAIL MOUNTAIN WILDFIRE THIRD PARTY INTERFERENCE (0.79 Acres)
- EMERY COUNTY ROAD #306 RIGHT-OF-WAY
- ELEVATION PROJECTED – GROUND OBSCURED

T. 16 S., R. 7 E.

28

STATE OF UTAH
REFERENCE NUMBER
5224883-2250
KENNETH S. FLICK
LICENSED PROFESSIONAL GEOLOGIST

CAD FILE NAME/DISK#: 500-5 SHEET 1

500-5

PACIFICORP
A BERKSHIRE HATHAWAY ENERGY COMPANY

DEER CREEK MINE
RILDA CANYON
POST RECLAMATION AERIAL

DRAWN BY: C. SEMBORSKI		500-5
SCALE: 1" = 100'		DRAWING #:
DATE: AUGUST 13, 2019		SHEET 2 OF 2 REV.

REVISION

PacifiCorp

Deer Creek Mine

C/015/0018

Volume 11 North Rilda Portal Facilities

Volume 11, Appendix Volume A, Table of Contents

Revise Entire Section

Volume 11, Appendix Volume A

Soils

Appendix A **Report: Soil Inventory and Assessment, Rilda Canyon Portal and Facilities Site, Deer Creek Mine, EIS Environmental and Engineering Consulting, May 2004.**

Appendix B **Report: Soil Survey Report of the New North Rilda Canyon Portal Facilities Area, Mt. Nebo Scientific, July 2004. Soil Storage Addendum March 2005.**

Appendix C **Prime Farmland Determination: NRCS, October 2004.**

Appendix D **Soil Map of the Extended Permit Boundary for Water Relief Pipeline March 2017, Report: Soil Survey Map Unit Descriptions: USFS/NRCS, Prime Farmland Determination: NRCS, March 2017.**

Appendix E **Post Reclamation Soil Analysis Results and Sample Location Map.**

Biology

Appendix A **North Rilda Canyon Portal Facilities Area Vegetation Survey, 2004, Mt. Nebo Scientific, Inc.**

Appendix B **Vegetation Productivity Estimates Letter, 10/26/04,natural Resources Conservation Service.**

Appendix C **County Lists of Utah's Federally Listed Threatened, Endangered and Candidate Species, 5/21/04, Utah Division of Wildlife Resources.**

Appendix D **Preliminary Report on Surveys Conducted to Determine Potential Impacts of Rilda Surface Facility Development in Rilda Canyon During 2004, July 2004, by the Utah Department of Natural Resources.**

Fish and Macroinvertebrate Survey at Rilda Creek, Emery, Utah, Fall 2004, Preliminary Report, Cirrus Ecological Solutions, L.c., November 4, 2004.

Appendix E **2004 Ventilation Fan Sound Survey.**

Appendix F **Habitat Suitability Determination Report, 10/5/04, Eis Environmental & Engineering Consulting.**

Appendix G **An Evaluation of Bat Habitat: Rilda Canyon, Emery County, Utah, Joel M. and Gabrielle F. Diamond, October 2004.**

Appendix H **Guidelines for Managing Birds on Powerlines, Pacificorp, Effective Date: 2/15/99.**

Land Use

Appendix A **Archeology Report Reference**

Engineering

Appendix A **Ground Stability Analysis: 4/5th North Mains Crossing of the Right Fork of Rilda Canyon**

Appendix B **Correspondence Letters**

Appendix C **Environmental Assessment for Deer Creek Mine North Rilda Extension**

Appendix D **Decision Notice and Finding of No Significant Impact**

Appendix E **Dogm Letter - Consent to Conduct Mining**

Appendix F **North Rilda Canyon Facilities Geotechnical Investigation**
- 1991 RB&G Engineeering/geotechnical Design Services
- 2004 Amec/lgs Geophysics.

Appendix G **Rilda Canyon Facilities Site Photos**

Appendix H **Design Drawings - Rilda Canyon Facilities Phase I, 2006**

Appendix I **Design Drawings and Technical Specs - Deer Creek Mine Water Relief Pipeline 2016 – Rilda Canyon**

Volume 11, Appendix Volume B

Geology

Appendix A **Exploration Borehole Drilling and Abandonment.**

Appendix B **Acid and Toxic Forming Analysis (Star Point Sandstone Drill Logs).**

Hydrology

Appendix A **Response of Springs to Longwall Coal Mining at the Deer Creek and Cottonwood Mines, Wasatch Plateau, UT**

Appendix B **Drainage and Sediment Control Plan**

Appendix C **Rilda Canyon Geomorphology Investigation**

Appendix D **Rilda Canyon Spring Relocation Study**

Appendix E **Emery County/NRCS Plans and Designs for Runoff Protection Structures Near North Emery Water Users Special Services District Spring Collection Area**

PacifiCorp

Deer Creek Mine

C/015/0018

Volume 11 North Rilda Portal Facilities

Volume 11, Appendix Volume A

Add Note after TOC

Note: The Deer Creek Mine ceased production in January 2015. The southern portion of the mine was separated (by the construction of the 3rd North cross-cut 138 seals) from the Mill Fork Area and the portals at the Deer Creek canyon facility. The ventilation portals at the 9th East breakouts were sealed and backfilled in April 2015. The 1st Right Fan was taken off-line in March 2015. The final sealing of the Rilda Canyon Right Fork portals consisted of first constructing a water drainage system inclusive of an in-mine collection gallery together with the construction and permanent placement of a buried water pipeline (10" HDPE pipe) from the Rilda Canyon Right Fork portal to the Huntington Power Plant raw water pond (approximately 6 miles). This pipeline project was completed in November 2017. The final Rilda Canyon portal sealing consisted of two 25-foot thick concrete portal plugs with water drains, one each in the 1st Right facility fan and roadway portals that were constructed on November 8 and 10, 2017, and high strength Strata panel portal seals, one each in the Left Fork facility fan and roadway portals completed on December 18 and December 20, 2017. The portal seals were constructed to meet or exceed regulatory requirements of 30 CFR 75.1711. (Phase III Bond Release for the Left Fork Portal Facilities was approved on January 29, 2019.) Final reclamation of the 1st Right Fan facility, including the sedimentation pond was completed June 2019. All information pertaining to the operations of the mine has been retained in these appendices as an historic reference.

PacifiCorp

Deer Creek Mine

C/015/0018

Volume 11 North Rilda Portal Facilities

Volume 11, Appendix Volume A, Soils

Add Appendix E - Post Reclamation Soil Analysis Results and Sample Location Map

R645-301-200 SOILS SECTION

APPENDIX E

♦ SOIL SAMPLE ANALYSIS RESULTS

♦

♦ SAMPLE LOCATION MAP

BRIGHAM YOUNG UNIVERSITY

Environmental Analytical Laboratory
244 WIDB
Provo, UT 84602
801-422-2147

Plant and Wildlife Sciences Department

SAMPLE TEST REPORT AND RECOMMENDATIONS

Name: Interwest Mining Co.
Street: 15 North Main St.
City: Huntington State: Utah Zip: 84602

Date: 8-Jul-19
Telephone: 435-687-4825
Work Order: 1987

Sample Identification	Crop to be grown	pH	% Sand	% Silt	% Clay	Soil Texture	Cation Exchange meq/100g	% Organic Carbon
RIL0119		7.81	44.36	31.80	23.84	Loam		2.31

Test	Results	Very Low	Low	Medium	High	Very High	Recommendations
Salinity-ECe dS/m	0.56	X					no salinity problem
Zinc ppm Zn	0.06	X					apply 10 lbs of Zn/ac
Boron ppm B	2.25					X	no fertilizer needed
Selenium ppm Se	0.57					X	no fertilizer needed
SAR-Sodium Absorption Ratio	0.3	X					no sodium hazard
Calcium-SAR ppm Ca	79.0						
Magnesium SAR ppm Mg	38.5						
Sodium SAR ppm Na	12.0						
Sulfur % pyritic S	0.01	X					apply 1 lbs of S/ac
Acid Potential tons $CaCO_3$/1000 tons	0.41						
Ca Carbonate %$CaCO_3$	12.7						
Neutralization Pot. tons $CaCO_3$/1000 tons	127						
Acid Base Potential tons $CaCO_3$/1000 tons	126						good

Notes:

BRIGHAM YOUNG UNIVERSITY

Environmental Analytical Laboratory
244 WIDB
Provo, UT 84602
801-422-2147

Plant and Wildlife Sciences Department

SAMPLE TEST REPORT AND RECOMMENDATIONS

Name	Interwest Mining Co.	Date:	8-Jul-19
Street	15 North Main St.	Telephone:	435-687-4825
Huntington (City)	Utah (State) 84602 (Zip)	Fax:	1987

Sample Identification	Crop to be grown	pH	% Sand	% Silt	% Clay	Soil Texture	Cation Exchange meq/100g	% Organic Carbon
RIL0219		7.96	54.72	25.44	19.84	Sandy Loam		0.06

Test	Results	Very Low	Low	Medium	High	Very High	Recommendations
Salinity-ECe dS/m	2.20		X				no salinity problem
Zinc ppm Zn	0.06	X					apply 10 lbs of Zn/ac
Boron ppm B	1.50					X	no fertilizer needed
Selenium ppm Se	0.58					X	no fertilizer needed
SAR-Sodium Absorption Ratio	3.8		X				no sodium hazard
Calcium-SAR ppm Ca	117						
Magnesium SAR ppm Mg	209						
Sodium SAR ppm Na	301						
Sulfur % pyritic S	0.01	X					apply 1 lbs of S/ac
Acid Potential tons $CaCO_3$/1000 tons	0.18						
Ca Carbonate %$CaCO_3$	12.7						
Neutralization Pot. tons $CaCO_3$/1000 tons	127						
Acid Base Potential tons $CaCO_3$/1000 tons	127						good

Notes:

BRIGHAM YOUNG UNIVERSITY

Environmental Analytical Laboratory
244 WIDB
Provo, UT 84602
801-422-2147

Plant and Wildlife Sciences Department

SAMPLE TEST REPORT AND RECOMMENDATIONS

Name: Interwest Mining Co.
Street: 15 North Main St.
City: Huntington State: Utah Zip: 84602

Date: 8-Jul-19
Telephone: 435-687-4825
Fax: 1987

Sample Identification	Crop to be grown	pH	% Sand	% Silt	% Clay	Soil Texture	Cation Exchange meq/100g	% Organic Carbon
RIL0319		8.01	54.44	25.72	19.84	Sandy Loam		0.22

Test	Results	Very Low	Low	Medium	High	Very High	Recommendations
Salinity-ECe dS/m	2.25		X				no salinity problem
Zinc ppm Zn	0.04	X					apply 10 lbs of Zn/ac
Boron ppm B	1.39					X	no fertilizer needed
Selenium ppm Se	0.36					X	no fertilizer needed
SAR-Sodium Absorption Ratio	4.0		X				no sodium hazard
Calcium-SAR ppm Ca	107						
Magnesium SAR ppm Mg	204						
Sodium SAR ppm Na	304						
Sulfur % pyritic S	0.01	X					apply 1 lbs of S/ac
Acid Potential tons $CaCO_3$/1000 tons	0.22						
Ca Carbonate %$CaCO_3$	12.7						
Neutralization Pot. tons $CaCO_3$/1000 tons	127						
Acid Base Potential tons $CaCO_3$/1000 tons	127						good

Notes:

BRIGHAM YOUNG UNIVERSITY

Environmental Analytical Laboratory
244 WIDB
Provo, UT 84602
801-422-2147

Plant and Wildlife Sciences Department

SAMPLE TEST REPORT AND RECOMMENDATIONS

Name	Interwest Mining Co.		
Street	15 North Main St.		
City	Huntington	State Utah	Zip 84602

Date:	8-Jul-19
Telephone:	4825
Fax:	1987

Sample Identification	Crop to be grown	pH	% Sand	% Silt	% Clay	Soil Texture	Cation Exchange meq/100g	% Organic Carbon
RIL0419		7.99	53.44	24.72	21.84	Sandy Clay Loam		0.22

Test	Results	Very Low	Low	Medium	High	Very High	Recommendations
Salinity-ECe dS/m	2.20		X				no salinity problem
Zinc ppm Zn	0.03	X					apply 10 lbs of Zn/ac
Boron ppm B	1.39					X	no fertilizer needed
Selenium ppm Se	0.32					X	no fertilizer needed
SAR-Sodium Absorption Ratio	3.4		X				no sodium hazard
Calcium-SAR ppm Ca	109						
Magnesium SAR ppm Mg	209						
Sodium SAR ppm Na	265						
Sulfur % pyritic S	0.01	X					apply 1 lbs of S/ac
Acid Potential tons $CaCO_3$/1000 tons	0.22						
Ca Carbonate %$CaCO_3$	12.7						
Neutralization Pot. tons $CaCO_3$/1000 tons	127						
Acid Base Potential tons $CaCO_3$/1000 tons	127						good

Notes:

BRIGHAM YOUNG UNIVERSITY

Environmental Analytical Laboratory
244 WIDB
Provo, UT 84602
801-422-2147

Plant and Wildlife Sciences Department

SAMPLE TEST REPORT AND RECOMMENDATIONS

Name	Interwest Mining Co.	Date:	8-Jul-19
Street	15 North Main St.	Telephone:	4825
Huntington (City)	Utah (State) 84602 (Zip)	Fax:	1987

Sample Identification	Crop to be grown	pH	% Sand	% Silt	% Clay	Soil Texture	Cation Exchange meq/100g	% Organic Carbon
RIL0519		8.01	50.72	27.44	21.84	Sandy Clay Loam		0.21

Test	Results	Very Low	Low	Medium	High	Very High	Recommendations
Salinity-ECe dS/m	2.20		X				no salinity problem
Zinc ppm Zn	0.07	X					apply 10 lbs of Zn/ac
Boron ppm B	1.40					X	no fertilizer needed
Selenium ppm Se	0.66					X	no fertilizer needed
SAR-Sodium Absorption Ratio	3.8		X				no sodium hazard
Calcium-SAR ppm Ca	107						
Magnesium SAR ppm Mg	207						
Sodium SAR ppm Na	291						
Sulfur % pyritic S	0.01	X					apply 1 lbs of S/ac
Acid Potential tons $CaCO_3$/1000 tons	0.22						
Ca Carbonate %$CaCO_3$	12.7						
Neutralization Pot. tons $CaCO_3$/1000 tons	127						
Acid Base Potential tons $CaCO_3$/1000 tons	127						good

Notes:

BRIGHAM YOUNG UNIVERSITY

Environmental Analytical Laboratory
244 WIDB
Provo, UT 84602
801-422-2147

Plant and Wildlife Sciences Department

SAMPLE TEST REPORT AND RECOMMENDATIONS

Name: Interwest Mining Co.
Street: 15 North Main St.
City: Huntington State: Utah Zip: 84602

Date: 8-Jul-19
Telephone: 435-687-4825
Fax: 1987

Sample Identification	Crop to be grown	pH	% Sand	% Silt	% Clay	Soil Texture	Cation Exchange meq/100g	% Organic Carbon
RIL0619		7.89	45.44	33.72	20.84	Loam		2.42

Test	Results	Very Low	Low	Medium	High	Very High	Recommendations
Salinity-ECe dS/m	0.60	X					no salinity problem
Zinc ppm Zn	0.05	X					apply 10 lbs of Zn/ac
Boron ppm B	2.05					X	no fertilizer needed
Selenium ppm Se	0.49					X	no fertilizer needed
SAR-Sodium Absorption Ratio	2.1		X				no sodium hazard
Calcium-SAR ppm Ca	68						
Magnesium SAR ppm Mg	563						
Sodium SAR ppm Na	243						
Sulfur % pyritic S	0.02	X					apply 1 lbs of S/ac
Acid Potential tons CaCO3/1000 tons	0.53						
Ca Carbonate %CaCO3	12.7						
Neutralization Pot. tons CaCO3/1000 tons	127						
Acid Base Potential tons CaCO3/1000 tons	126						good

Notes:

BRIGHAM YOUNG UNIVERSITY

Environmental Analytical Laboratory
244 WIDB
Provo, UT 84602
801-422-2147

Plant and Wildlife Sciences Department

SAMPLE TEST REPORT AND RECOMMENDATIONS

Name: Interwest Mining Co.
Street: 15 North Main St.
City: Huntington State: Utah Zip: 84602

Date: 8-Jul-19
Telephone: 435-687-4825
Fax: 1987

Sample Identification	Crop to be grown	pH	% Sand	% Silt	% Clay	Soil Texture	Cation Exchange meq/100g	% Organic Carbon
RIL0719		8.22	61.44	20.72	17.84	Sandy Loam		BDL

Test	Results	Very Low	Low	Medium	High	Very High	Recommendations
Salinity-ECe dS/m	2.10		X				no salinity problem
Zinc ppm Zn	0.04	X					apply 10 lbs of Zn/ac
Boron ppm B	1.13					X	no fertilizer needed
Selenium ppm Se	0.36					X	no fertilizer needed
SAR-Sodium Absorption Ratio	4.4		X				no sodium hazard
Calcium-SAR ppm Ca	107						
Magnesium SAR ppm Mg	157						
Sodium SAR ppm Na	309						
Sulfur % pyritic S	0.01	X					apply 1 lbs of S/ac
Acid Potential tons $CaCO_3$/1000 tons	0.29						
Ca Carbonate %$CaCO_3$	12.7						
Neutralization Pot. tons $CaCO_3$/1000 tons	127						
Acid Base Potential tons $CaCO_3$/1000 tons	127						good

Notes:

BRIGHAM YOUNG UNIVERSITY

Environmental Analytical Laboratory
244 WIDB
Provo, UT 84602
801-422-2147

Plant and Wildlife Sciences Department

SAMPLE TEST REPORT AND RECOMMENDATIONS

Name	Interwest Mining Co.	Date:	8-Jul-19
Street	15 North Main St.	Telephone:	435-687-4825
Huntington (City)	Utah (State) 84602 (Zip)	Fax:	1987

Sample Identification	Crop to be grown	pH	% Sand	% Silt	% Clay	Soil Texture	Cation Exchange meq/100g	% Organic Carbon
RIL0819		7.98	59.44	23.08	17.48	Sandy Loam		BDL

Test	Results	Very Low	Low	Medium	High	Very High	Recommendations
Salinity-ECe dS/m	2.30		X				no salinity problem
Zinc ppm Zn	0.03	X					apply 10 lbs of Zn/ac
Boron ppm B	0.96					X	no fertilizer needed
Selenium ppm Se	0.34					X	no fertilizer needed
SAR-Sodium Absorption Ratio	4.7		X				no sodium hazard
Calcium-SAR ppm Ca	145						
Magnesium SAR ppm Mg	169						
Sodium SAR ppm Na	350						
Sulfur % pyritic S	0.01	X					apply 1 lbs of S/ac
Acid Potential tons $CaCO_3$/1000 tons	0.20						
Ca Carbonate %$CaCO_3$	12.7						
Neutralization Pot. tons $CaCO_3$/1000 tons	127						
Acid Base Potential tons $CaCO_3$/1000 tons	127						good

Notes:

BRIGHAM YOUNG UNIVERSITY

Environmental Analytical Laboratory
244 WIDB
Provo, UT 84602
801-422-2147

Plant and Wildlife Sciences Department

SAMPLE TEST REPORT AND RECOMMENDATIONS

Name	Interwest Mining Co.	Date:	8-Jul-19
Street	15 North Main St.	Telephone:	435-687-4825
Huntington (City)	Utah (State) 84602 (Zip)	Fax:	1987

Sample Identification	Crop to be grown	pH	% Sand	% Silt	% Clay	Soil Texture	Cation Exchange meq/100g	% Organic Carbon
RIL0919		8.10	57.44	26.44	16.12	Sandy Loam		BDL

Test	Results	Very Low	Low	Medium	High	Very High	Recommendations
Salinity-ECe dS/m	1.85		X				no salinity problem
Zinc ppm Zn	0.04	X					apply 10 lbs of Zn/ac
Boron ppm B	1.16					X	no fertilizer needed
Selenium ppm Se	0.37					X	no fertilizer needed
SAR-Sodium Absorption Ratio	5.3		X				no sodium hazard
Calcium-SAR ppm Ca	91						
Magnesium SAR ppm Mg	102						
Sodium SAR ppm Na	313						
Sulfur % pyritic S	0.01	X					apply 1 lbs of S/ac
Acid Potential tons $CaCO_3$/1000 tons	0.27						
Ca Carbonate %$CaCO_3$	12.7						
Neutralization Pot. tons $CaCO_3$/1000 tons	127						
Acid Base Potential tons $CaCO_3$/1000 tons	127						good

Notes:

BRIGHAM YOUNG UNIVERSITY

Environmental Analytical Laboratory

244 WIDB

Provo, UT 84602

801-422-2147

Plant and Wildlife Sciences Department

SAMPLE TEST REPORT AND RECOMMENDATIONS

Name	Interwest Mining Co.	Date:	8-Jul-19
Street	15 North Main St.	Telephone:	435-687-4825
Huntington (City)	Utah (State) 84602 (Zip)	Fax:	1987

Sample Identification	Crop to be grown	pH	% Sand	% Silt	% Clay	Soil Texture	Cation Exchange meq/100g	% Organic Carbon
RIL1019		8.31	63.80	21.08	15.12	Sandy Loam		BDL

Test	Results	Very Low	Low	Medium	High	Very High	Recommendations
Salinity-ECe dS/m	1.75		X				no salinity problem
Zinc ppm Zn	0.03	X					apply 10 lbs of Zn/ac
Boron ppm B	1.03					X	no fertilizer needed
Selenium ppm Se	0.33					X	no fertilizer needed
SAR-Sodium Absorption Ratio	6.3		X				no sodium hazard
Calcium-SAR ppm Ca	68						
Magnesium SAR ppm Mg	72						
Sodium SAR ppm Na	313						
Sulfur % pyritic S	0.01	X					apply 1 lbs of S/ac
Acid Potential tons CaCO3/1000 tons	0.21						
Ca Carbonate %CaCO3	12.7						
Neutralization Pot. tons CaCO3/1000 tons	127						
Acid Base Potential tons CaCO3/1000 tons	126						good

Notes:

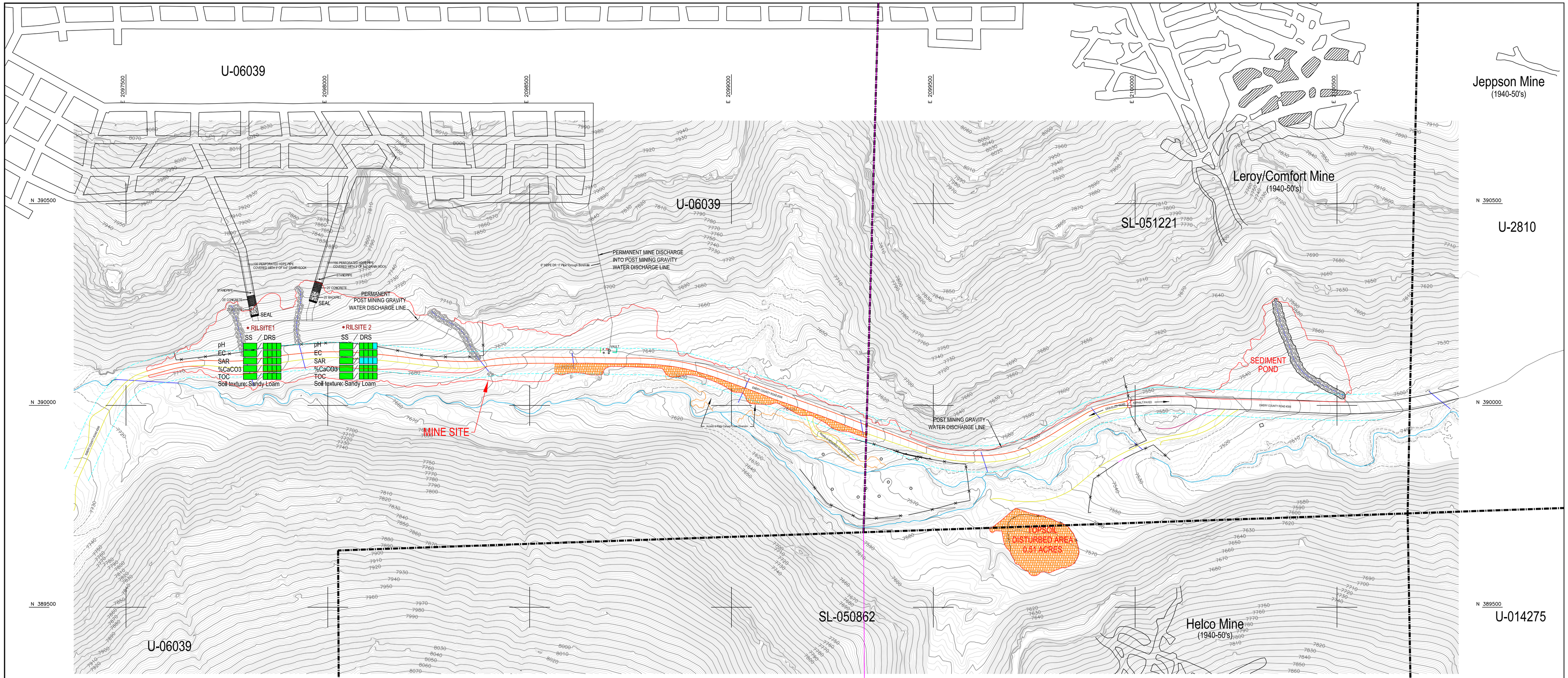

29

28

Legend

- 5 Samples at 1' Depth Intervals Up to 5'
  Topsoil 0 - 1'
  Subsoil 1' - 5'

Soil Suitability/Unsuitability Evaluation (DOGM Guidelines for Management of Topsoil and Overburden - Table 4)

Evaluation Intervals Surface Soil (SS) 0" - 12"/ Deep Root Zone Soil (DRS) 12"- 24", 24"-36", 36"-48", 48"-60"

Criteria	Good	Fair	Poor	Unacceptable
pH	6.5 - 8.0	6.0 - 6.4 8.2 - 8.5	5.5 - 6.0 8.6 - 9.0	<5.5 >9.0
EC	0 - 4	4 - 8	8 - 15	>15
SAR	0 - 4	5 - 10	10 -14	>14 >20 (sandy soils)
%CaCO3	<15	15 - 30	>30	
TOC	<10%			
Soil texture	Loam/Sandy Clay Loam/Sandy Loam			

Example for location: RILSITE1

RILSITE 1

	SS	DRS
pH		
EC		
SAR		
%CaCO3		
TOC		

Soil texture: Sandy Loam

LEGEND

- CULVERT
- RIP RAP
- FENCE
- DISTURBED BOUNDARY POST RECLAMATION
- EMERY COUNTY ROAD #306 RIGHT-OF-WAY
- USFS TRAIL MOUNTAIN WILDFIRE THIRD PARTY INTERFERENCE (0.79 Acres)
- ELEVATION PROJECTED – GROUND OBSCURED

T. 16 S., R. 7 E.

STATE OF UTAH
REFERENCE NUMBER
5224883-2250
KENNETH A. FLECK
LICENSED PROFESSIONAL GEOLOGIST

APPENDIX E

CAD FILE NAME/DISK#: SOILS SECTION ATTACHMENT 1 SOILS SAMPLING LOCATIONS

PACIFICORP
A BERKSHIRE HATHAWAY ENERGY COMPANY

DEER CREEK MINE
RILDA CANYON POST RECLAMATION
SOIL SAMPING LOCATIONS

DRAWN BY:	C. SEMBORSKI	APPENDIX E	
SCALE:	1"=100'	DRAWING #:	
DATE:	AUGUST 13, 2019	SHEET 1 OF 1	REV.

REVISION

PacifiCorp

Deer Creek Mine

C/015/0018

Volume 11 North Rilda Portal Facilities

<u>Volume 11, Appendix Volume B, Hydrology Maps</u>

Replace 700-4 (sheet 1), add 700-4 (sheet 2)

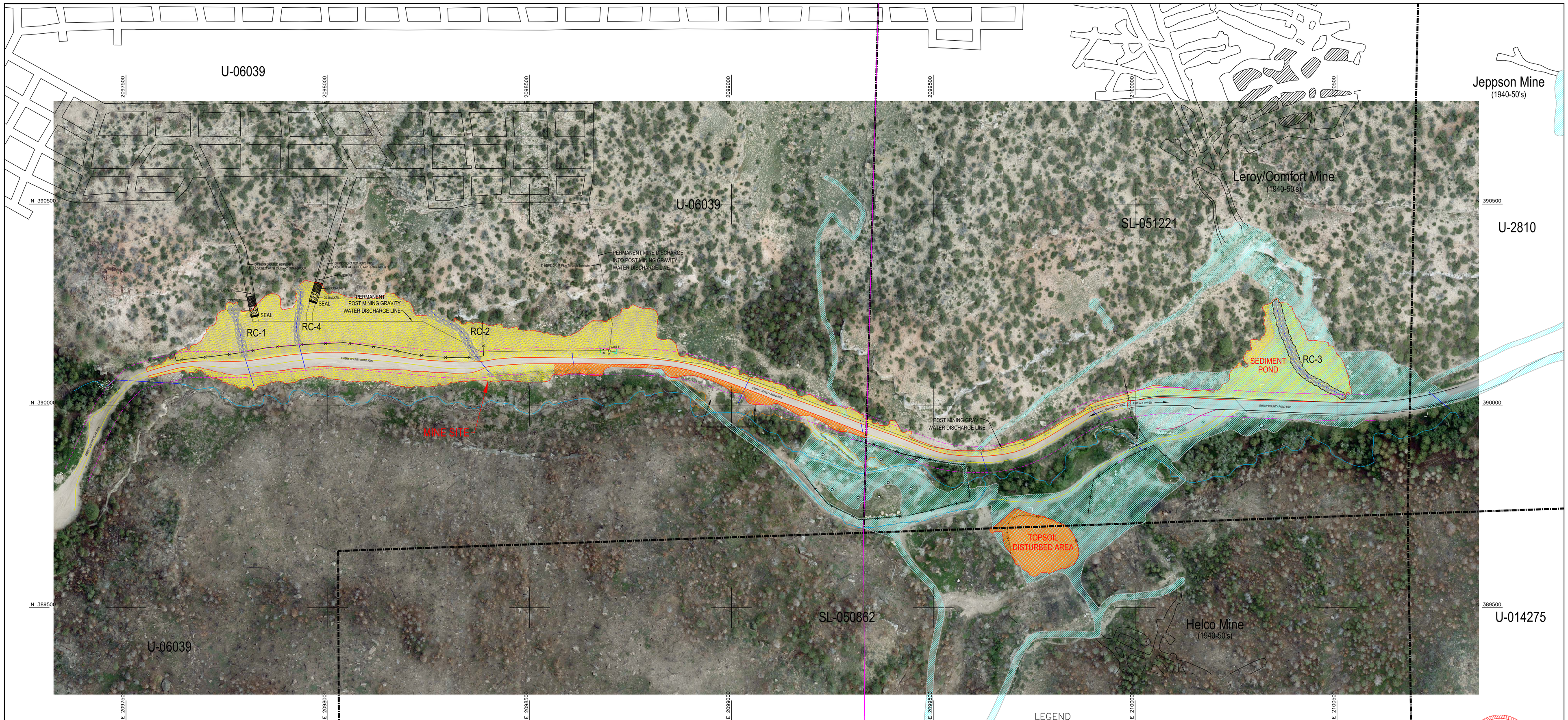

29

28

T. 16 S., R. 7 E.

N

DISTURBED AREA = 6.25 ACRES
INCLUDES:
- MINE SITE AND SEDIMENT POND = 5.74 ACRES
- TOPSOIL STORAGE SITE = 0.51 ACRES
EXCLUDES:
- RECONSTRUCTED EMERY COUNTY ROAD #306

PRE-DISTURBED AREA (AML RECLAIMED 1988)
OF THE 6.25 TOTAL DISTURBED ACRES, 1.79 ACRES ARE ON LAND PRE-DISTURBED BY HISTORICAL MINE SITES. THE PRE-DISTURBED LAND IS 28.6% OF THE TOTAL DISTURBED AT THE RILDA CANYON PORTAL FACILITIES.

LEGEND
- CULVERT
- RIP RAP / RECLAIMED CHANNEL
- FENCE
- DISTURBED BOUNDARY POST RECLAMATION
- USFS TRAIL MOUNTAIN WILDFIRE THIRD PARTY INTERFERENCE (0.79 Acres)
- EMERY COUNTY ROAD #306 RIGHT-OF-WAY
- ELEVATION PROJECTED – GROUND OBSCURED

STATE OF UTAH
REGISTERED PROFESSIONAL ENGINEER
REFERENCE NUMBER 5224883-2250
6-8
KENNETH S. FLECK

700-4

CAD FILE NAME/DISK#: 500-5 SHEET 1

PACIFICORP
A BERKSHIRE HATHAWAY ENERGY COMPANY

DEER CREEK MINE
RILDA CANYON
RECLAMATION HYDROLOGY AERIAL

8-20-2019	REVISED TO REFLECT FINAL RECLAMATION	CAS	
6-3-10	REVISED DISTURBED AREA BOUNDARIES, AND FINAL RECLAMATION TOPOGRAPHY	KJL	
5-23-05	ADDED FOREST DEVELOPMENT ROAD 024	KJL	
	REVISION		

DRAWN BY: K. LARSEN
SCALE: 1"=100'
DATE: NOVEMBER 12, 2004
DRAWING #: 700-4
SHEET 2 OF 2
REV. ——

U-06039

Jeppson Mine
(1940-50's)

Leroy/Comfort Mine
(1940-50's)

SL-051221

U-2810

U-06039

PERMANENT MINE DISCHARGE INTO POST MINING GRAVITY WATER DISCHARGE LINE

PERMANENT POST MINING GRAVITY WATER DISCHARGE LINE

SEAL

SEAL

MINE SITE

SEDIMENT POND

POST MINING GRAVITY WATER DISCHARGE LINE

TOPSOIL DISTURBED AREA

SL-050862

Helco Mine
(1940-50's)

U-014275

U-06039

N 390500

N 390000

N 389500

E 2097500

E 2098000

E 2098500

E 2099000

E 2099500

E 2100000

E 2100500

29

28

T. 16 S., R. 7 E.

DISTURBED AREA = 6.25 ACRES
INCLUDES:
- MINE SITE AND SEDIMENT POND = 5.74 ACRES
- TOPSOIL STORAGE SITE = 0.51 ACRES
EXCLUDES:
- RECONSTRUCTED EMERY COUNTY ROAD #306

PRE-DISTURBED AREA (AML RECLAIMED 1988)
OF THE 6.25 TOTAL DISTURBED ACRES, 1.79 ACRES ARE ON LAND PRE-DISTURBED BY HISTORICAL MINE SITES. THE PRE-DISTURBED LAND IS 28.6% OF THE TOTAL DISTURBED AT THE RILDA CANYON PORTAL FACILITIES.

LEGEND

- CULVERT
- RIP RAP / RECLAIMED CHANNEL
- FENCE
- DISTURBED BOUNDARY POST RECLAMATION
- USFS TRAIL MOUNTAIN WILDFIRE THIRD PARTY INTERFERENCE (0.79 Acres)
- EMERY COUNTY ROAD #306 RIGHT-OF-WAY
- ELEVATION PROJECTED – GROUND OBSCURED
- 0+00 CROSS SECTION BASELINE (REFER TO 500-4)

STATE OF UTAH
REGISTERED PROFESSIONAL ENGINEER
REFERENCE NUMBER
5224883-2250
KENNETH S. FLECK

CAD FILE NAME/DISK#: 500-5 SHEET : 500-5

PACIFICORP
A BERKSHIRE HATHAWAY ENERGY COMPANY

DEER CREEK MINE
RILDA CANYON
POST RECLAMATION TOPOGRAPHY

DRAWN BY: C. SEMBORSKI	500-5
SCALE: 1" = 100'	DRAWING #:
DATE: AUGUST 13, 2019	SHEET 1 OF 2 REV. —

REVISION

PacifiCorp

Deer Creek Mine

C/015/0018

Volume 11 North Rilda Portal Facilities

Volume 11, Appendix Volume B, Hydrology, Appendix E

Add Entire Appendix E

R645-301-200 HYDROLOGY SECTION

APPENDIX E

- Emery County/NRCS Plans and Designs for Runoff Protection Near North Emery Water Users Special Services District Spring Collection Area.

25 October 2019

Captain Kyle Ekker
1850 North 550 West
Castle Dale, UT 84513

Mr. Ekker:

In accordance with the cooperative agreement NR188D43XXXXC018, NRCS has received and reviewed documents submitted by Merrial Johansen of Johansen & Tuttle Engineering, Inc in your behalf. These documents provided the information necessary for work to be completed in Rilda Canyon. The following documents have been reviewed:

- Project Drawings – Rilda Canyon (10/25/2019)
- Project Specifications – Rilda Canyon, Trail Moutain October, 2019 Specs (10/22/2019)
- Design Report – 10-22-19 Rilda Canyon Design Report
- Operation & Maintenance Plan – OPERATION AND MAINTAINENCE Rilda (10/22/2019)
- Quality Assurance Plan – Quality Assurance Rilda Canyon Project (10/22/2019)

These items have been accepted as functional by NRCS. Any changes or modification of these document will need to be submitted to NRCS for review and approval.

This design for Rilda Canyon is governed by NRCS practice standards **Open Channel (582), UT-October 2015; Stream Bank and Shoreline Protection (580), May 2014; Structure for Water Control (587), May 2014;** and **Diversion (362), May 2016.** These structures are also classified as **Significant Hazard** since the springs providing water to the North Emery Water Users Special Service District would be effect by failure of any of these practices. Based on NRCS Job Approval Authority this project is classified as **Job Class VI.**

NRCS has also received an NRCS-ADS-78 (ADS 78 RILDA SIGNED) and supporting documentation. These documents provide assurance to NRCS that Emery County has the real property rights (land and water), permits, and licenses necessary for the installation of these EWP project measures.

Based on the documentation received, construction **may** proceed on the work planned for **Rilda Canyon**. The work planned for Millfork Canyon, and Meeting House canyon is still in the design and/or design review process and may not proceed until the design review is complete and assurance of real property acquisition has been provided to NRCS.

Sincerely,

Bronson Smart

Bronson Smart, P.E.
State Conservation Engineer and EWP Program Manager

DOCUMENTS & SPECIFICATIONS FOR

EMERY COUNTY

TRAIL MOUNTAIN EMERGENCY WATERSHED PROTECTION PROJECT, 2019

RILDA CANYON

johansen & tuttle ENGINEERING INC.

PO Box 487 Castle Dale, UT 84513 Ph: 435-381-2523 e-mail: jt@etv.net

ADVERTISEMENT FOR BIDS
NOTICE TO CONTRACTORS

Project Owner:
Emery County
Castle Dale, Utah 84513

Separate sealed BIDS for the Trail Mountain Emergency Watershed Protection Project, 2019 RILDA CANYON will be received by Emery County at the office of the Emery County Clerk at 75 East Main – Castle Dale, Utah until 12:00 p.m. , October 1, 20 19 , and then opened and publicly read aloud in the regularly scheduled Commission Meeting, October 1, 2019, at 3:00 p.m.

A bid bond in the amount of five percent (5%) of the bid, made payable to the Owner, shall accompany the Bid.

Major item of work:

1.	Structural Concrete	-	1,500 C.Y.
2.	Compacted Embankment	-	6,000 C.Y.
3.	Rock Rip Rap	-	16,000 C.Y.

Prospective Bidders will assemble at the office of Johansen & Tuttle Engineering, Inc. September 19 , 2019, at 10:00 a.m., for the group showing.

Attendance at the project pre-site-show meeting and site-show is mandatory and a prerequisite to submitting a bid for the project. Bidding Contractors, or a duly authorized representative, must arrive at the Project Engineer's office for the said meeting and site-showing, at Johansen & Tuttle Engineering, 90 South 100 East, Castle Dale, UT.

The Owner reserves the right to reject any or all bids or to waive any formality or technicality in any bid in the interest of the County.

The CONTRACT DOCUMENTS may be examined at the following location: Engineer's Office: Johansen & Tuttle Engineering, Inc., 90 South 100 East, Castle Dale, Utah 84513.

Contract documents may be obtained at the Pre-bid Meeting upon a non-refundable fee of $100.00. The fee will provide both a hard copy and electronic copy of the project drawings and specifications.

September 11, 2019 Lynn Sitterud , Commissioner
Date

INFORMATION FOR BIDDERS

BIDS will be received by Emery County (herein called the "OWNER"), at the office of the Emery County Clerk @ 75 East Main – Castle Dale, Utah until 12:00 p.m. October 1 20 19 , and then opened and publicly read aloud at the Emery County Commission Meeting on October 1 , 2019 , at 3:00 p.m.

Each BID must be submitted in a sealed envelope, addressed to Emery County – Emery County Clerk at @ 75 East Main PO Box 629 – Castle Dale, Utah 84513 . Each sealed envelope containing a BID must be plainly marked on the outside as BID for Trail Mountain Emergency Watershed Protection Project, 2019 RILDA CANYON . Envelope should bear on the outside the name of the BIDDER, his address, his license number if applicable and the name of the project for which the BID is submitted. If forwarded by mail, the sealed envelope containing the BID must be enclosed in another envelope addressed to the OWNER at Emery County Clerk – PO Box 629 - Castle Dale, Utah 84513 .

All BIDS must be made on the required BID form. All blank spaces for BID prices must be filled in, in ink or typewritten, and the BID form must be completed and executed when submitted. Only one copy of the BID form is required.

The OWNER may waive any informalities or minor defects or reject any and all BIDS. Any BID may be withdrawn prior to the above scheduled time for the opening of BIDS or authorized postponement thereof. Any BID received after the time and date specified shall not be considered. No BIDDER may withdraw a BID within 60 days after the actual date of the opening thereof. Should there be reasons why the contract cannot be awarded within the specified period, the time may be extended by mutual agreements between the OWNER and the BIDDER.

BIDDERS must satisfy themselves of the accuracy of the estimated quantities in the BID Schedule by examination of the site and a review of the drawings and specifications including ADDENDA. After BIDS have been submitted, the BIDDER shall not assert that there was a misunderstanding concerning the quantities of the WORK or of the nature of the WORK to be done.

The OWNER shall provide to BIDDERS prior to BIDDING, all information which is pertinent to and delineates and describes, the land owned and right-of-ways acquired or to be acquired.

The CONTRACT DOCUMENTS contain the provisions required for the construction of the PROJECT. Information obtained from an officer, agent, or employee of the OWNER or any other person shall not affect the risks or obligations assumed by the CONTRACTOR or relieve him from fulfilling any of the conditions of the contract.

Each BID must be accompanied by a BID bond payable to the OWNER for five percent of the total amount of the BID. As soon as the BID prices have been compared, the OWNER will return the BONDS of all except the three lowest responsible BIDDERS. When the Agreement is executed the bonds of the two remaining unsuccessful BIDDERS will be returned. The BID BOND of the successful BIDDER will be retained until the payment BOND and performance BOND have been executed and approved, after which it will be returned. A certified check may be used in lieu of a BID BOND.

A performance BOND and a payment BOND, each in the amount of 100 percent of the CONTRACT PRICE, with a corporate surety approved by the OWNER will be required for the faithful performance of the contract.

Attorneys-in-fact who sign BID BONDS or payment BONDS and performance BONDS must file with each BOND a certified and effective dated copy of their power of attorney.

The party to whom the contract is awarded will be required to execute the Agreement and

obtain the performance BOND and payment BOND within ten (10) calendar days from the date when NOTICE OF AWARD is delivered to the BIDDER. The NOTICE OF AWARD shall be accompanied by the necessary Agreement and BOND forms. In case of failure of the BIDDER to execute the Agreement, the OWNER may at his option consider the BIDDER in default, in which case the BID BOND accompanying the proposal shall become the property of the OWNER.

The OWNER within ten (10) days of the receipt of acceptable performance BOND, payment BOND, and agreement signed by the party to whom the Agreement was awarded, shall sign the Agreement and return to such party an executed duplicate of the Agreement. Should the OWNER not execute the Agreement within such period, the BIDDER may by WRITTEN NOTICE withdraw his signed Agreement. Such notice of withdrawal shall be effective upon receipt of the notice by the OWNER.

The NOTICE TO PROCEED shall be issued within (10) days of the execution of the Agreement by the OWNER. Should there be reasons why the NOTICE TO PROCEED cannot be issued within such period, the time may be extended by mutual agreement between the OWNER and CONTRACTOR. If the NOTICE TO PROCEED has not been issued within the ten (10) day period or within the period mutually agreed upon, the CONTRACTOR may terminate the Agreement without further liability on the part of either party.

The OWNER may make such investigations as he deems necessary to determine the ability of the BIDDER to perform the WORK, and the BIDDER shall furnish to the OWNER all such information and data for this purpose as the OWNER may request. The OWNER reserves the right to reject any BID if the evidence submitted by, or investigation thereof, such BIDDER fails to satisfy the OWNER that such BIDDER is properly qualified to carry out the obligations of the Agreement and to complete the WORK contemplated therein.

A conditional or qualified BID will not be accepted.

Award will be made to the lowest responsive BIDDER.

Owner may award according to low base bid, base bid plus time, or time bid which is in the best interest of the owner.

All applicable laws, ordinances, and the rules and regulations of all authorities having jurisdiction over construction of the PROJECT shall apply to the contract throughout.

Each BIDDER is responsible for inspecting the site and for reading and being thoroughly familiar with the CONTRACT DOCUMENTS. The failure or omission of any BIDDER to any of the foregoing shall in no way relieve any BIDDER from any obligation in respect to his BID.

Further, the BIDDER agrees to abide by the requirements under Executive Order No. 11246, as amended, including specifically the provisions of the equal opportunity clause set forth in the SUPPLEMENTAL GENERAL CONDITIONS.

The low BIDDER shall supply the names and addresses of major material SUPPLIERS and SUBCONTRACTORS when requested to do so by the OWNER.

Attendance at the project pre-site-show meeting and site-show is mandatory and a prerequisite to submitting a bid for the project. Bidding Contractors, or a duly authorized representative, must arrive at the Project Engineer's office for the said meeting and site-showing, at Johansen & Tuttle Engineering, 90 South 100 East, Castle Dale, UT 84513, no later than 10:00 a.m. on September 19 ,2019.

The CONTRACT DOCUMENTS may be examined at the following location: Engineer's Office: Johansen & Tuttle Engineering, Inc., 90 South 100 East Castle Dale, Utah 84513. Contract documents may be obtained at the Pre-bid Meeting upon a non-refundable fee of $100.00. The fee will provide both a hard copy and electronic copy of the project drawings and specifications

BID

Proposal of _____ (hereinafter called "BIDDER"), organized and existing under the laws of the State of _____ doing business as _____ *.

To the Emery County (hereinafter called "OWNER").

In compliance with your advertisement for Bids, BIDDER hereby proposes to perform all WORK for the construction of Trail Mountain Emergency Watershed Protection Project, 2019 RILDA CANYON

in strict accordance with the CONTRACT DOCUMENTS, within the time set forth therein, and at the prices stated below.

By submission of this BID, each BIDDER certifies, and in the case of a joint each party thereto certifies as to his own organization, that this BID has been arrived at independently, without consultation, communication, or agreement as to any matter relating to this BID with any other BIDDER or with any competitor.

BIDDER hereby agrees to commence WORK under this contract on or before a date to be specified in the NOTICE TO PROCEED and to fully complete the PROJECT within _____ consecutive calendar days thereafter. BIDDER further agrees to pay as liquidated damages, the sum of $ 1,000.00 for each consecutive calendar day thereafter as provided in Section 10 of the Special Conditions.

BIDDER acknowledges receipt of the following ADDENDUM:

_____

_____

_____

* Insert "a corporation", "a partnership", or "an individual" as applicable.

BIDDER AGREES TO PERFORM ALL THE WORK DESCRIBED IN THE CONTRACT DOCUMENTS FOR THE FOLLOWING UNIT PRICE OR LUMP SUM:

EMERY COUNTY

TRAIL MOUNTAIN EMERGENCY WATERSHED PROTECTION PROJECT, 2019

RILDA CANYON

SUMMARY OF ITEMS

ITEM	SECTION	WORK OR MATERIAL	UNIT	QTY	UNIT PRICE	AMOUNT
1	8	MOBILIZATION	L.S.	1	$ -	$ -
2	13	CLEARING AND GRUBBING	L.S.	1	$ -	$ -
3	16	GEOMEMBRANE LINER, 60ML TEXTURED HDPE (DOUBLE SIDED TEXTURE)	SQ.FT	21,040	$ -	$ -
4	23	COMPACTED EMBANKMENT	C.Y.	5,800	$ -	$ -
5	23	UNTREATED BASE COURSE (1 1/2-INCH MAX)	C.Y.	160	$ -	$ -
6	32	STRUCTURAL CONCRETE	C.Y.	1,500	$ -	$ -
7	32	TRASH RACK STRUCTURE (INSTALLATION ONLY)	L.S.	1	$ -	$ -
8	61	ROCK RIP RAP	C.Y.	10,520	$ -	$ -
9	61	ROCK	C.Y.	3,400	$ -	$ -
10	62	GROUTED ROCK RIP RAP	C.Y.	2,310	$ -	$ -
11	91	FIELD FENCE	L.F.	940	$ -	$ -
12	93	SPLIT STEEL CASING (FOR 8" WATER LINE)	L.F.	85	$ -	$ -
13	96	RESTORATION	L.S.	1	$ -	$ -
					BASE BID…	$
		CONTRACTOR DAYS FOR BID (See Section 24, Special Conditions)	DAYS		$ 1,000.00	$
				TOTAL BID...	……	$

WHERE EXTENSION ERRORS OCCUR, THE UNIT PRICES SHALL BE USED TO DETERMINE THE AMOUNT.

SIGNATURE

ADDRESS

TITLE

DATE

LICENSE NUMBER

ATTEST

EIN

BID BOND

KNOW ALL MEN BY THESE PRESENTS, that we, the undersigned, _____ as Principal, and _____ as as Surety, are hereby held and firmly bound unto _____ as OWNER in the penal sum of _____ for the payment of which, well and truly to be made, we hereby jointly and severally bind ourselves, successors and assigns.

Signed, this _____ day of _____, 20 _____.

The Condition of the above obligation is such that whereas the Principal has submitted to _____ a certain BID, attached hereto and hereby made a part hereof to enter into a contract in writing, for the

_____

_____

NOW, THEREFORE.

(a) If said BID shall be rejected, or

(b) If said

BID shall be accepted and the Principal shall execute and deliver a contract in the Form of Contract attached hereto (properly completed in accordance with said BID) and shall furnish a BOND for his faithful performance of said contract , and for the payment of all persons performing labor or furnishing materials in connection therewith, and shall in all other respects perform the agreement created by the acceptance of said BID.

then this obligation shall be void, otherwise the same shall remain in force and effect; it being expressly understood and agreed that the liability of the Surety for any and all claims hereunder shall, in no event, exceed the penal amount of this obligation as herein stated.

The Surety, for value received, hereby stipulates and agrees that the obligations of said Surety and its BOND shall be in no way impaired or affected by any extension of the time within which the OWNER may accept such BID; and said Surety does hereby waive notice of any such extension.

IN WITNESS WHEREOF, the Principal and the Surety have hereunto set their hands and seals, and such of them as are corporations have caused their corporate seals to be hereto affixed and these presents to be signed by their proper officers, the day and year first set forth above.

_____ (L.S.)
Principal

_____
Surety

By: _____

IMPORTANT - Surety companies executing BONDS must appear on the Treasury Department's most current list (Circular 570 as amended) and be authorized to transact business in the state where the project is located.

AGREEMENT

THIS AGREEMENT, made this _____ day of _____ , 20 ___ , by and between _____EMERY COUNTY_____, hereinafter called "OWNER" and doing business as (an individual,) or (a partnership,) or (a corporation) hereinafter called "CONTRACTOR."

WITNESSETH: That for and in consideration of the payments and agreements hereinafter mentioned:

1. The CONTRACTOR will commence and complete the construction of ____Trail Mountain Emergency Watershed Protection Project, 2019 RILDA CANYON___ .

2. The CONTRACTOR will furnish all of the material, supplies, tools, equipment, labor, and other services necessary for the construction and completion of the PROJECT described herein.

3. The CONTRACTOR will commence the work required by the CONTRACT DOCUMENTS within __10_____ calendar days after the date of the NOTICE TO PROCEED and will complete the same within _____ calendar days unless the period for completion is extended otherwise by the CONTRACT DOCUMENTS.

4. The CONTRACTOR agrees to perform all of the WORK described in the CONTRACT DOCUMENTS and comply with the terms therein for the sum of $_____, or as shown in the BID SCHEDULE.

5. The term "CONTRACT DOCUMENTS" means and includes the following:

(A) Advertisement For BIDS

(B) Information For BIDDERS

(C) BID

(D) BID BOND

(E) Agreement

(F) General Conditions

(G) SUPPLEMENTAL GENERAL CONDITIONS

(H) Payment BOND

(I) Performance BOND

(J) NOTICE OF AWARD

(K) NOTICE TO PROCEED

(L) CHANGE ORDER

(M) DRAWINGS prepared by Johansen & Tuttle Engineering, Inc. numbered 1, 2, 3, 4, 5, 6, 7, 8, 9, 10, 11, 12, 13, 14, 15, 16, 17, 18, 19, 20, 21, 22 23, 24, 25, 26, 27, 28, 29, 30, 31, 32 and 33 dated 2019

(N) SPECIFICATIONS prepared or issued by Johansen & Tuttle Engineering, Inc. , and dated 2019 .

(O) ADDENDA:

No. _____ , dated _____ , 20 ___.

No. _____ , dated _____ , 20 ___.

6. The OWNER will pay to the CONTRACTOR in the manner and at such times as set forth in the General Conditions such amounts as required the CONTRACT DOCUMENTS.

7. This Agreement shall be binding upon all parties hereto and respective heirs, executors, administrators, successors, and assigns. IN WITNESS WHEREOF, the parties hereto have executed, or caused to be executed by their duly authorized officials, this Agreement in (3) each of which shall be deemed an original on the date above written.

OWNER:

Emery County

BY _____

NAME Lynn Sitterud

(Please Type)

TITLE Commission Chair

ATTEST: _____

CONTRACTOR:

_____

BY _____

NAME _____

(Please Type)

TITLE _____

ATTEST: _____

EIN _____

PAYMENT BOND

KNOW ALL MEN BY THESE PRESENTS: that

_____

(Name of Contractor)

_____

(Address of Contractor)

a _____, hereinafter called Principal,

(Corporation, Partnership, or Individual)

and _____

(Name of Surety)

_____

(Address of Surety)

hereinafter called Surety, are held and firmly bound unto _____

_____

(Name of Owner)

_____

(Address of Owner)

hereinafter called OWNER, in the penal sum of _____ Dollars, $ (_____)
in lawful money of the United States, for the payment of which sum well and truly to be made, we bind ourselves, successors, and assigns, jointly and severally, firmly by these presents.

THE CONDITION OF THIS OBLIGATION is such that whereas, the Principal entered into a certain contract with the OWNER, dated the _____ day of _____ 20 _____, a copy of which is hereto attached and made a part hereof for the construction of:

_____

_____

NOW, THEREFORE, if the Principal shall promptly make payments to all persons, firms, SUBCONTRACTORS, and corporations furnishing materials for or performing labor in the prosecution of the WORK provided for in such contract, and any authorized extension or modification thereof, including all amounts due for materials, lubricants, oil, gasoline, coal and coke, repairs on machinery, equipment and tools, consumed or used in connection with the construction of such WORK, and all insurance premiums on said WORK, and for all labor, performed in such WORK whether by SUBCONTRACTOR or otherwise, then this obligation shall be void; otherwise to remain in full force and effect.

PROVIDED, FURTHER, that the said Surety for value received hereby stipulates and agrees that no change, extension of time, alteration or addition to the terms of the contract or to the WORK to be performed thereunder or the SPECIFICATIONS accompanying the same shall in any wise affect its

obligation on this BOND, and it does hereby waive notice of any such change, extension of time, alteration or addition to the terms of the contract or to the WORK or to the SPECIFICATIONS.

PROVIDED, FURTHER, that no final settlement between the OWNER and the CONTRACTOR shall abridge the right of any beneficiary hereunder, whose claim may be unsatisfied.

IN WITNESS WHEREOF, this instrument is executed in _____ counterparts, each one of which
(Number)

shall be deemed an original, this the _____ day of _____ 20 _____.

ATTEST:

_____
Principal

_____
(Principal) Secretary

(SEAL) By_____ (s)

_____
(Address)

_____

_____
Witness as to Principal

_____
(Address)

_____

_____
Surety

ATTEST: By_____ (s)
Attorney-in-Fact

_____
Witness as to Surety

_____
(Address)

_____
(Address)

_____

NOTE: Date of BOND must not be prior to date of Contract.
If CONTRACTOR is Partnership, all partners should execute BOND.

IMPORTANT: Surety companies executing BONDS must appear on the Treasury Department's most current list (Circular 570 as amended) and be authorized to transact business in the State where the PROJECT is located.

PERFORMANCE BOND

KNOW ALL MEN BY THESE PRESENTS: that

_____
(Name of Contractor)

_____
(Address of Contractor)

a _____, hereinafter called Principal, and
(Corporation, Partnership, or Individual)

_____
(Name of Surety)

_____
(Address of Surety)

hereinafter called Surety, are held and firmly bound unto _____

_____
(Name of Owner)

_____
(Address of Owner)

hereinafter called OWNER, in the penal sum of _____
_____ Dollars, $ (_____)

in lawful money of the United States, for the payment of which sum well and truly to be made, we bind ourselves, successors, and assigns, jointly and severally, firmly by these presents.

THE CONDITION OF THIS OBLIGATION is such that whereas, the Principal entered into a certain contract with the OWNER, dated the _____ day of _____ , 20_____, a copy of which is hereto attached and made a part hereof for the construction of:

_____

_____

NOW, THEREFORE, if the Principal shall well, truly and faithfully perform its duties, all the undertakings, covenants, terms, conditions, and agreements of said contract during the original term thereof, and any extensions thereof which may be granted by the OWNER, with or without notice to the Surety and during the one year guaranty period, and if he shall satisfy all claims and demands incurred under such contract, and shall fully indemnify and save harmless the OWNER from all costs and damages which it may suffer by reason of failure to do so, and shall reimburse and repay the OWNER all outlay and expense which the OWNER may incur in making good any default, then this obligation shall be void; otherwise to remain in full force and effect.

PROVIDED, FURTHER, that the said surety, for value received hereby stipulates and agrees that no change, extension of time, alteration or addition to the terms of the contract or to WORK to be

performed thereunder or the SPECIFICATIONS accompanying the same shall in any wise affect its obligation on this BOND, and it does hereby waive notice of any such change, extension of time, alteration or addition to the terms of the contract or to the WORK or to the SPECIFICATIONS.

PROVIDED, FURTHER, that no final settlement between the OWNER and the CONTRACTOR shall abridge the right of any beneficiary hereunder, whose claim may be unsatisfied.

IN WITNESS WHEREOF, this instrument is executed in _____ counterparts, each
(Number)

one of which shall be deemed an original, this the _____ day of _____ 20 ____.

ATTEST: _____
Principal

_____ By _____ (s)
(Principal) Secretary

(SEAL)

_____ _____
(Witness as to Principal) (Address)

_____ _____
(Address)

_____ _____
Surety

ATTEST:

_____
(Surety) Secretary

(SEAL)

_____ By _____
(Witness as to Surety) Attorney-in-Fact

_____ _____
(Address) (Address)

_____ _____

NOTE: Date of BOND must not be prior to date of Contract.
If CONTRACTOR is Partnership, all partners should execute BOND.

IMPORTANT: Surety companies executing BONDS must appear on the Treasury Department's most current list (Circular 570 as amended) and be authorized to transact business in the state where the PROJECT is located.

NOTICE OF AWARD

TO: _____

_____

_____

PROJECT Description: Trail Mountain Emergency Watershed Protection Project, 2019
RILDA CANYON

The OWNER has considered the BID submitted by you for the above described WORK in response to its Advertisement for Bids dated _____, 20 19 and Information for Bidders.

You are hereby notified that your BID has been accepted for items in the amount of $ _____.

You are required by the Information for Bidders to execute the Agreement and furnish the required CONTRACTOR'S Performance BOND, Payment BOND and certificates of insurance within ten (10) calendar days from the date of this Notice to you.

If you fail to execute said Agreement and to furnish said BONDS within ten (10) days from the date of this Notice, said OWNER will be entitled to consider all your rights arising out of the OWNER'S acceptance of your BID as abandoned and as a forfeiture of your BID BOND. The OWNER will be entitled to such other rights as may be granted by law.

You are required to return an acknowledged copy of this NOTICE OF AWARD to the OWNER.

Dated this _____day of _____, 20 19 .

Emery County .
Owner

By _____.

Title Emery County Commissioner .

ACCEPTANCE OF NOTICE

Receipt of the above NOTICE OF AWARD is hereby acknowledged

by _____

this the _____ day of _____, 20 _____

By _____

Title _____

NOTICE TO PROCEED

To: _____ Date: _____

_____ Project: Trail Mountain Emergency Protection

_____ Project, 2019 RILDA CANYON

You are hereby notified to commence WORK in accordance with the Agreement dated _____ 20 _____, on or before _____, 20____, and you are to complete the WORK within _____ consecutive calendar days thereafter. The date of completion of all WORK is therefore _____, 20 ____.

Emery County .
Owner

By_____.

Title Emery County Commissioner .

ACCEPTANCE OF NOTICE

Receipt of the above NOTICE TO PROCEED is hereby acknowledged

by _____. _____

this the _____ day of _____, 20 _____

By _____

Title _____

CONSTRUCTION SPECIFICATION

SPECIAL CONDITIONS

1. **SCOPE**

This section of the specifications cover specific requirements, instructions and conditions applicable to this project only, which are not covered by the General Conditions or detailed specifications. Should there be conflicting statements between this section and other sections of these specifications, this section shall govern.

2. **STANDARD PRODUCTS**

The material brand names and catalog numbers shown on the drawings or called out in the specifications are meant to set a standard that all other materials should meet. The Contractor or supplier is encouraged to submit information and data to show his material is equal. The decision of the Engineer shall be final in this section.

3. **MAINTENANCE OF TRAFFIC**

The Contractor shall at all times conduct his operations so that there is a minimum of interruptions of the use of streets and roads involved. The exact procedure for any interruption of traffic, for providing detours when required, for providing flag men when required, and for providing passage into and through work areas for essential traffic shall be worked out in advance of the phase of construction involved, between the Contractor, Engineer, and the appropriate city, county, or state officials.

4. **CONTRACTOR TO MAINTAIN AND REPLACE STAKES**

The Contractor shall furnish without charge, competent men from his force, stakes, tools and other materials, for the proper staking out of the work, in making measurements and surveys, and in establishing temporary or permanent reference marks in connection with the work. This does not mean to imply, the Contractor is to pay for initial staking, as this will be the cost of the Owner.

Initial staking to be provided by the Owner will be the establishment of:

a. Bench Marks.

b. Original lines and grades necessary for horizontal and vertical control of the construction of the permanent works.

c. Right-of-way limits acquired through permits from Federal Agencies.

The Contractor shall provide surveys necessary to maintain the lines and grades during the construction of the permanent works.

5. LINES AND GRADES

All work done under this contract shall be done to the line, grades, and elevations shown on the plans, or as directed by the Engineer. The Contractor shall keep the Engineer informed, a reasonable time in advance, of the times and places at which he intends to do work, in order that lines and grades may be furnished and necessary measurements for record and payment may be made with the minimum of inconvenience to the Engineer and delay to the Contractor.

6. PAYMENT OF SUPPLIES AND SUBCONTRACTORS

It is intended that the Contractor and subcontractor make full monthly payments to their suppliers and subcontractors as invoices are rendered. Such invoices shall be deemed as paid at the time each monthly certificate of payment is prepared by the Engineer. Affidavits will be submitted by the Contractor each as means of certifying to the Engineer that all equipment and materials delivered has been paid for. This will be the normal proof of payment; however, the Engineer will have the right at any time to demand copies of certified paid invoices. Failure or inability to provide such paid invoices will be sufficient cause for hold-up for further monthly pay estimates.

7. GENERAL SAFETY REQUIREMENTS

Excavations

a. This section shall apply to all excavations in which workmen may be exposed to hazard of collapse of the banks, sides, or walls, during the time construction work is in process.

b. All excavations shall be guarded by shoring, bracing or underpinning, or other methods as may be necessary to prevent injury to workmen resulting from the sides caving in.

c. Excavated or other material must be deposited a safe distance from the edge of the excavation so as to prevent its falling or sliding back into the excavation.

d. No trenches shall be left open at any time unless guarded with adequate barricades, warning lamps, and signs.

e. Contractor's foremen and superintendents shall know where to obtain an oxygen resuscitator for use in an emergency. The phone number to call for immediate resuscitator and ambulance service shall be posted in all Contractors trench and at conspicuous places on the project at all times.

8. CERTIFICATIONS

Certifications that all materials used in the construction of the permanent works meet these specifications will be required. These certifications shall include the contract number, project name, bid item number, material furnished, applicable specification number and quantity furnished.

9. TEST

Test results that are required from the Contractor at the Contractor's expense will be performed as specified in the specifications. Duplicate copies of the test results shall be furnished to the Engineer for his approval at least ten days prior to the use of the materials in the permanent works. All "on site" testing shall be made in the presence of and be approved by the Engineer or his representative. Written test results for "on site" tests will not be required.

10. LIQUIDATED DAMAGES

If the work, or any part thereof, is not completed within the time agreed upon in this contract or any extension thereof, the contractor shall be liable to the owner in the amount of $1,000.00 per day for each and every calendar day the completion of the work is delayed beyond the time provided in this contract, as fixed and agreed liquidated damages and not as a penalty, and the Owner shall have the right to deduct from the retainage of the moneys which may be then due or which may be due and payable to the Contractor, the amount of the liquidated damages; and if the amount so retained by the owner is insufficient to pay in full such liquidated damages, the Contractor shall pay to the Owner the amount necessary to effect payment in full of such liquidated damages.

11. EXISTING UTILITIES (BLUE STAKES)

The Contractor will be responsible for crossing existing utilities such as gas lines, water lines, telephone lines, irrigation crossings, etc., with the pipeline and construction equipment. Contractor will locate these lines prior to crossing. The utility or service lateral must be relocated due to the grade of the pipe; it shall be done by the Contractor under the direction of the Engineer. If the utility or service lateral is damaged by the Contractor’s negligence, it shall be restored at the Contractor's expense.

12. **EXAMINATION OF PLANS, SPECIFICATIONS, SPECIAL PROVISIONS, AND SITES**

The bidder is required to examine carefully the site of the proposed work, the proposal, plans, specifications, supplemental specification, special provision, and contract forms before submitting a proposal.

The submission of a bid shall be considered PRIMA FACIE evidence that the Bidder has made the required examinations and is satisfied as to the conditions to be encountered in performing the work and as to the requirements of the contract.

13. **FENCE RESTORATION**

All fences removed or damaged as a result of Contractor's work shall be replaced by the Contractor. Such fences shall be equal or better in material and workmanship than the original. Such fence restoration shall be completed immediately upon completion of work in that area. Where livestock are enclosed the Contractor shall establish temporary fencing during work. All discarded fence material shall be properly disposed of by removal from the site.

14. **OVERTIME WORK**

The Contractor shall not work after the hours of 6:00 p.m., before 7:00 a.m., or on Saturdays, Sundays, or holidays without written consent of the Engineer.

16. **SUPERVISION BY CONTRACTOR**

The Contractor will supervise and direct work. He will be solely responsible for the means, techniques, sequences and procedures of construction. The Contractor will employ and maintain on the work site a qualified supervisor or superintendent who shall have been designated in writing by the Contractor as the contractors representative at the site. The supervisor or superintendent shall have full authority to act on behalf of the contractor and all communications given to the supervisor shall be as binding as if given to the contractor. The supervisor shall be present on the site at all times as required to perform adequate supervision and coordination of the work.

17. **CONTRACTOR'S PERSONNEL**

All work under this contract shall be performed in a skillful and workmanlike manner. The Owner may, in writing, require the Contractor to remove from the work any employee the Owner deems incompetent, careless, or otherwise objectionable.

18. **GENERAL PROVISION AMENDMENT**

Article 16 "Dispute Resolution" of the general provisions is herein deleted. Exhibit GC-A, "Dispute Resolution Agreement" will not be used to resolve disputes that may arise under this agreement. All claims, disputes and other matters in question between Owner and Contractor arising out of, or relating to the Contract Documents, or the breach thereof, except for claims which have been waived by the making or acceptance of final payment as provided by paragraph 14.15 shall be decided through regular civil court procedures and this contract can not be misconstrued as an agreement to arbitrate.

19. **GUARANTEE OF THE WORK**

The Contractor shall, **for a period of one (1) year** after completion and acceptance of the work, maintain and repair any defective work which may occur to the permanent work. Also, any trench settlement which may occur and shall make suitable repairs to any roadways or other structures which may be damaged as a result of backfill settlement.

20. **RETAINAGE ON PROGRESS PAYMENTS**

Five percent (5%) will be retained on each progress payment to the Contractor until final completion and acceptance of all work.

21. **LIABILITY INSURANCE**

Before the contract is executed the Contractor with the successful bid shall be required to furnish to Owner, a copy of the public liability and property damage insurance policy in an amount of no less than $2,000,000 each occurrence which is to be in force and applicable to the project. In addition, the Contractor shall be required to furnish, at the same time a letter from agent for the company holding said policy, stating that he will inform Owner of any change in the status of the policy.

23. **PERMITS TO WORK ON PUBLIC RIGHT OF WAYS**

Contractor shall obtain the necessary permits and provide the required bonds to work within the State Road Right-of-Way and County Road Right-of-Way. Compliance with all permit provisions will be required of this contract.

24. **CONTRACT TIME**

A. Procedures for bidding contract time for the Price + Time bidding process.

1. Includes liquidated damages for late completion of project milestones.

Determination of Calendar Days					
A	**B**	**C**	**D**	**E**	**F**
START MILESTONE	**FINISH MILESTONE**	**TIME-RELATED COST-RATE**	**TIME-RELATED COST-RATE METHOD**	**MIN**	**MAX**
		Dollars per Calendar day		Calendar Days	Calendar Days
10 calendar days after Notice to Proceed	Substantial Completion	$1,000	Liquidated Damages	90	200

B. Liquidated damage is assessed at the rate shown in column C for the difference between the number of calendar days bid and the actual number of calendar days used to achieve the milestone.
C. There is no maximum dollar amount for disincentive charges.
D. A project schedule will be required at the pre-construction conference. Contractor's progress will be monitored in conformance with the schedule.
E. Contract payments will be based on the Base Bid amount.

25. **UTAH STATE LAW 34**

Contractor will comply with all of the current provisions of Title 34, Chapter 30, UCA as amended.

26. **INDEMNIFICATION**

The Contractor agrees that it/he shall at all times protect and indemnify and save harmless, the Owner, and the Owner's consultants from any and all claims, demands, judgments, expenses, including reasonable attorney's fees and all other damages of every kind and nature made, rendered or incurred by or in behalf of any person or corporation whatsoever, including the parties hereto and their employees that may arise, occur or grow out of any acts, actions, work or other activity done by the said Contractor in the performance and execution of this Contract.

27. **STATUS VERIFICATION SYSTEM**

Pursuant to the law: 'A public employer may not enter into a contract for the physical performance of services within the state with a contractor unless the contractor registers and participates in the Status Verification System to verify the work eligibility status of the contractor's new employees that are employed in the state."

It is the responsibility of the Contractor to comply with Utah Code Annotated Sections 636-12-302, and provide verification documentation to the project Owner.

28. STORM WATER POLLUTION PREVENTION PLAN

Contractor will be required to comply with all state laws including the requirement of a "Storm Water Pollution Prevention Plan", (SWPPP).

29. COMPENSATION

Compensation for compliance to these Special Conditions will be made in the appropriate bid items.

Appendix F

NRCS Supplement to OSHA Parts 1910 and 1926

The NRCS Supplement to OSHA Parts 1910 and 1926 is included in NRCS construction contracts and recommended for other contracts, such as CLO contracts, in which the NRCS is involved. It contains requirements that are not included in the OSHA requirements. It also emphasizes specific safety requirements that are covered in OSHA Parts 1910 and 1926.

NATURAL RESOURCES CONSERVATION SERVICE
SUPPLEMENT TO OSHA PARTS 1910 AND 1926
CONSTRUCTION INDUSTRY STANDARDS AND INTERPRETATIONS

The Contractor shall comply with OSHA (Occupational Safety and Health Administration) Parts 1910 and 1926, Construction Industry Standards and Interpretations, and with this supplement.

Requests for variances or waiver from this supplement are to be made to the Contracting Officer in writing supported by evidence that every reasonable effort has been made to comply with the contractual requirements. A written request for a waiver or a variance shall include--

(1) Specific reference to the provision or standard in question;

(2) An explanation as to why the waiver is considered justified; and

(3) The Contractor's proposed alternative, including technical drawings, materials, or equipment specifications needed to enable the Contracting Officer to render a decision.

No waiver or variance will be approved if it endangers any person. The Contractor shall not proceed under any requested revision of provision until the Contracting Officer has given written approval. The Contractor is to hold and save harmless the Natural Resources Conservation Service free from any claims or causes of action whatsoever resulting from the Contractor or subcontractors proceeding under a waiver or approved variance.

Copies of OSHA Parts 1910 and 1926, Construction Industry Standards and Interpretations, may be obtained from:

Superintendent of Documents
U.S. Government Printing Office
Washington, D.C. 20402

1.0 GENERAL CONTRACTOR REQUIREMENTS:

1.1 SAFETY PROGRAM. Each Contractor is to demonstrate that he or she has facilities for conducting a safety program commensurate with the work under contract. The Contractor is to submit in writing a proposed comprehensive safety program to the Contracting Officer for approval before the start of construction operations. The program is to specifically state what provisions the Contractor proposes to take for the health and safety of all employees, including subcontractors and rental equipment operators. The program shall be site specific and provide details relevant to the work to be done, the hazards associated with the work, and the actions that will be necessary to minimize the identified hazards.

1.2 PRECONSTRUCTION SAFETY MEETING. Representatives for the Contractor are to meet with the Contracting Officer (CO) or the CO's representative before the start of construction to discuss the safety program and the implementation of all health and safety standards pertinent to the work under this contract.

1.3 JOINT SAFETY POLICY COMMITTEE. The Contractor or designated on-site representative is to participate in monthly meetings of a joint Safety Policy Committee, composed of the Natural Resources Conservation Service (Contracting Local Organization in locally awarded contracts) and Contractor supervisory personnel. At these meetings the Contractor's project manager and the Contracting Officer will review the effectiveness of the Contractor's safety effort, resolve current health and safety problems, and coordinate safety activities for upcoming work.

1.4 SAFETY PERSONNEL. Each Contractor is to designate a competent supervisory employee satisfactory to the Contracting Officer to administer the safety program.

1.5 SAFETY MEETINGS. A minimum of one "on-the-job" or "toolbox" safety meeting is to be conducted each week by all field supervisors or foremen and attended by mechanics and all construction personnel at the jobsite. The Contractor is to also conduct regularly scheduled supervisory safety meetings at least monthly for all levels of job supervision.

1.6 SAFETY INSPECTION. The Contractor shall perform frequent and regular safety inspections of the jobsite, materials, and equipment, and shall correct deficiencies.

1.7 FIRST AID TRAINING. Every Contractor foreman's work crew must include an employee who has a current first aid certificate from the Mine Safety and Health Administration, American Red Cross, or other state-approved organization.

1.8 REPORTS. Each Contractor is to maintain an accurate record of all job-related deaths, diseases, or disabling injuries. The records shall be maintained in a manner approved by the Contracting Officer. A copy of all reports is to be provided to the Contracting Officer. All fatal or serious injuries are to be reported immediately to the Contracting Officer, and every assistance is to be given in the investigation of the incident, including submission of a comprehensive narrative report to the Contracting Officer. Other occurrences with serious accident potential, such as equipment failures, slides, and cave-ins, must also be reported immediately. The Contractor is to assist and cooperate fully with the Contracting Officer in conducting accident investigations. The Contracting Officer is to be furnished all information and data pertinent to investigation of an accident.

1.9 CERTIFICATION OF INSURANCE. Contractors are to provide the Contracting Officer or his or her authorized representative with certificates of insurance before the start of operations indicating full compliance with State Worker's Compensation statutes, as well as other certificates of insurance required under the contract.

2.0 FIRST AID AND MEDICAL FACILITIES:

2.1 FIRST AID KITS. A 16-unit first aid kit approved by the American Red Cross is to be provided at accessible, well-identified, locations at the ratio of at least 1 kit for each 25 employees. The first aid kits are to be moisture proof and dust tight, and the contents of the kits are to be replenished as used or as they become ineffective or outdated.

2.2 EMERGENCY FIRST AID. At least one employee certified to administer emergency first aid must be available on each shift and duly designated by the Contractor to care for injured employees. The names of the certified employees shall be posted at the jobsite.

2.3 COMMUNICATION AND TRANSPORTATION. Prior to the start of work, the Contractor is to make necessary arrangements for prompt and dependable communications, transportation, and medical care for injured employees. At least one stretcher and two blankets shall be readily available for transporting injured employees.

2.4 FIRST AID AND MEDICAL REPORTS. The Contractor is to maintain a record system for first aid and medical treatment on the jobsite. Such records are to be readily available to the Contracting Officer and are to include--

(a) A daily treatment log listing chronologically all persons treated for occupational injuries and illnesses;

(b) Cumulative record of injury for each individual;

(c) Monthly statistical records of occupational injuries, classified by type and nature of injury; and

(d) Required records for worker's compensation.

2.5 SIGNS AND DIRECTIONAL MARKINGS. Adequate identification and directional markers are to be provided to readily denote the location of all first aid stations.

2.6 EMERGENCY LISTING. A listing of telephone numbers and addresses of doctor, rescue squad, hospital, police, and fire departments is to be provided at all first aid locations.

3.0 PHYSICAL QUALIFICATIONS OF EMPLOYEES:

3.1 GENERAL REQUIREMENTS. Persons employed throughout the contract are to be physically qualified to perform their assigned duties. Employees must not knowingly be permitted or required to work while their ability or alertness is impaired by fatigue, illness, or any other reason that may jeopardize themselves or others.

3.2 HOIST OPERATORS. Operators of cranes, cableways, and other hoisting equipment shall be examined annually by a physician and provided with a certification stating that they are physically qualified to safely operate hoisting equipment. The Contractor is to submit a copy of each certification to the Contracting Officer.

3.3 HEAVY EQUIPMENT OPERATORS. It is recommended that operators of trucks and heavy construction equipment be given physical examinations to determine if they are physically qualified to perform their assigned work without endangering themselves or others.

3.4 MOTOR VEHICLE OPERATORS. Operators of motor vehicles engaged primarily in the transportation of personnel are to be 18 years of age or older and have a valid state operator's permit or license for the equipment being operated. The operators must have passed a physical examination administered by a licensed physician within the past year showing that they are physically qualified to operate vehicles safely.

4.0 PERSONAL PROTECTIVE EQUIPMENT:

4.1 HARDHAT AREAS. The entire jobsite, with the exception of offices, shall be considered a hardhat area. All persons entering the area are, without exception, required to wear hardhats. The Contractor shall provide hardhats for visitors entering hardhat areas.

4.1.1 LABELS. Hardhats shall bear a manufacturer's label indicating design compliance with the appropriate ANSI (American National Standards Institute) standard.

4.2 POSTING. Signs at least 3 by 4 feet worded as follows with red letters (minimum 6 inches high) and white background shall be erected at access points to designated hardhat areas:

CONSTRUCTION AREA - HARDHATS REQUIRED BEYOND THIS POINT

These signs are to be furnished and installed by the Contractor at entries to shops, construction yards, and job access points.

4.3 SAFETY GOGGLES (DRILLERS)

4.3.1 DRILLERS AND HELPERS. Drillers and helpers operating pneumatic rock drills must wear protective safety goggles.

5.0 MACHINERY AND MECHANIZED EQUIPMENT:

5.1 SAFE CONDITION. Before any machinery or mechanized equipment is initially used on the job, it must be inspected and tested by qualified personnel and determined to be in safe operating condition and appropriate for the intended use. Operators shall inspect their equipment prior to the beginning of each shift. Any deficiencies or defects shall be corrected prior to using the equipment. Safety equipment, such as seatbelts, installed on machinery is to be used by equipment operators.

5.2 TAGGING AND LOCKING. The controls of power-driven equipment under repair are to be locked. An effective lockout and tagging procedure is to be established, prescribing specific responsibilities and safety procedures to be followed by the person or persons performing repair work. Mixer barrels are to be securely locked out before permitting employees to enter them for cleaning or repair.

5.3 HAUL ROADS FOR EQUIPMENT

5.3.1 ROAD MAINTENANCE. The Contractor shall maintain all roadways, including haul roads and access roads, in a safe condition so as to eliminate or control dust and ice hazards. Wherever dust is a hazard, adequate dust-laying equipment shall be available at the jobsite and utilized to control the dust.

5.3.2 SINGLE-LANE HAUL ROADS. Single-lane haul roads with two-way traffic shall have adequate turnouts. Where turnouts are not practical, a traffic control system shall be provided to prevent accidents.

5.3.3 TWO-WAY HAUL ROADS. On two-way haul roads, arrangements are to be such that vehicles travel on the right side wherever possible. Signs and traffic control devices are to be employed to indicate clearly any variations from a right-hand traffic pattern. The road shall be wide enough to permit safe passage of opposing

traffic, considering the type of hauling equipment used.

5.3.4 DESIGN AND CONSTRUCTION OF HAUL ROADS. Haul road design criteria and drawings, if requested by the Contracting Officer, are to be submitted for approval prior to road construction. Sustained grades shall not exceed 12 percent and all curves shall have open-sight line with as great a radius as practical. All roads shall be posted with curve signs and maximum speed limits that will permit the equipment to be stopped within one-half the minimum sight distance.

5.3.5 OPERATORS. Machinery and mechanized equipment shall be operated only by authorized qualified persons.

5.3.6 RIDING ON EQUIPMENT. Riding on equipment by unauthorized personnel is prohibited. Seating and safety belts shall be provided for the operator and all passengers.

5.3.7 GETTING ON OR OFF EQUIPMENT. Getting on or off equipment while the equipment is in motion is prohibited.

5.3.8 HOURS OF OPERATION. Except in emergencies, an equipment operator shall not operate any mobile or hoisting equipment for more than 12 hours without an 8-hour rest interval away from the job.

5.4 POWER CRANES AND HOISTS (TRUCK CRANES, CRAWLER CRANES, TOWER CRANES, GANTRY CRANES, HAMMERHEAD CRANES, DERRICKS, CABLEWAYS, AND HOISTS)

5.4.1 PERFORMANCE TEST. Before initial onsite operation, at 12-month intervals, and after major repairs or modification, power cranes, derricks, cableways, and hoists must satisfactorily complete a performance test to demonstrate the equipment's ability to safely handle and maneuver the rated loads. The tests shall be conducted in the presence of a representative of the Contracting Officer. Test data shall be recorded and a copy furnished the Contracting Officer.

5.4.2 PERFORMANCE TEST—POWER CRANES (Crawler mounted, truck mounted and wheel mounted). The performance test is to be carried out as per ANSI requirements. The test is to consist of raising, lowering, and braking the load and rotating the test load through 360° degrees at the specified boom angle or radius. Cranes equipped with jibs or boom-tip extensions are to be tested using both the main boom and the jib, with an appropriate test load in each case.

5.4.3 PERFORMANCE TEST—DERRICKS, GANTRY CRANES, TOWER CRANES, CABLEWAYS, AND HOISTS, INCLUDING OVERHEAD CRANES. This equipment is to be performance tested as per ANSI requirements.

5.4.4 BOOM ANGLE INDICATOR. Power cranes (includes draglines) with booms capable of moving in the vertical plane shall be provided with a boom angle indicator in good working order.

5.4.5 CRANE TEST CERTIFICATION. The performance test required by 5.4.2 and 5.4.3 is fulfilled if the Contractor provides the Contracting Officer a copy of a certificate of inspection made within the past 12 months by a qualified person or by a government or private agency satisfactory to the Contracting Officer.

5.4.6 POSTING FOR HIGH VOLTAGE LINES. A notice of the 10-foot (or greater) clearance required by OSHA 1926.550, Subpart N, shall be posted in the operator's cab of cranes, shovels, boom-type concrete pumps, backhoes, and related equipment.

5.4.7 BOOM STOPS. Cranes or derricks with cable-supported booms, except draglines, shall have a device attached between the gantry of the A-frame and the boom chords to limit the elevation of the boom. The device shall control the vertical motions of the boom with increasing resistance from 83° or less, until completely stopping the boom at not over 87° above horizontal.

5.4.8 SAFETY HOOKS. Hooks used in hoisting personnel or hoisting loads over construction personnel or in the immediate vicinity of construction personnel shall be forged steel equipped with safety keepers. When shackles are used under these conditions, they shall be of the locking type or have the pin secured to prohibit turning.

5.5 ROLLOVER PROTECTIVE STRUCTURES (ROPS)

5.5.1 ROLLOVER PROTECTIVE STRUCTURES. OSHA 1926, Subpart W, Overhead Protection, Sections 1001 and 1002 are applicable regardless of the year in which the equipment was manufactured and regardless of the struck capacity of the equipment.

5.5.2 EQUIPMENT REQUIRING ROPS. The requirement for ROPS meeting 5.5.1 above applies to crawler and rubber-tired tractors such as dozers, push-and-pull tractors, winch tractors, tractors with backhoes, and mowers; off-highway, self-propelled, pneumatic-tired earthmovers, including scrapers, motor graders and loaders; and rollers, compactors, water tankers (excluding trucks with cabs). These requirements shall also apply to agricultural and industrial tractors and similar equipment.

5.5.3 EQUIPMENT REQUIRING SEATBELTS. The requirements for seatbelts as specified in OSHA Subpart 0, Motor Vehicles, Mechanized Equipment, and Marine Operations, Section 1926.602 shall also apply to self-propelled compactors and rollers, and rubber-tired skid-steer equipment.

6.0 LADDERS AND SCAFFOLDING:

6.1 LADDERS. OSHA 1926, Subpart L - Section 450. Ladders shall be used as work platforms only when use of small hand tools or handling of light material is involved. No work requiring lifting of heavy materials or substantial exertion shall be done from ladders.

6.2 SCAFFOLDING. OSHA 1926, Subpart L - Section 451. Scaffolds, platforms or temporary floors shall be provided for all work except that which can be done safely from the ground or similar footing.

6.3 SAFETY BELTS, LIFELINE, AND LANYARDS. OSHA 1926, Subpart E, Section 104. Lifelines, safety belts and lanyards independently attached or attended, shall be used when performing such work as the following when the requirements of 6.1 or 6.2 above cannot be met.

(a) Work on stored material in hoppers, bins, silos, tanks, or other confined spaces.

(b) Work on hazardous slopes, structural steel, or poles; erection or dismantling of safety nets, tying reinforcing bars; and work from Boatswain's chairs, swinging scaffolds, or other unguarded locations at elevations greater than 6 feet.

(c) Work on skips and platforms used in shafts by crews when the skip or cage does not block the opening to within 1 foot of the sides of the shaft, unless cages are provided.

This page intentionally left blank.

ATTACHMENT

Emergency Procedures for Discoveries

Under NRCS' EWP program

<u>If you discover cultural resources during construction</u> ... (arrowheads, stone tool flakes, carved bone, fire pits, old crockery, glass or cans, traces of cabins, root cellars, etc.)

- Stop work and don't disturb further
- Immediately report to NRCS (phone numbers listed below)

(Local NRCS Staff will immediately contact the Cultural Resource Specialist for further action as deemed necessary.)

<u>If the discovery includes possible human remains</u> ...

- Stop work, secure site from any interference or further disturbance
- On private land or state land, report discovery to County Coroner & Local Law Enforcement
- Report discovery to NRCS staff (listed below)

NRCS staff, in role as lead agency, must immediately

- Contact NRCS all NRCS staff listed below.
- Confirm County Coroner & Law Enforcement was contacted.

Name of NRCS staff to call	Work Telephone	Cell Phone
Andrew Williamson, Archeologist	(801) 524-4591	(801) 694-3019
Grant Smith, Cultural Resource Specialist – South	(435) 637-0041 x119	(435) 630-1233
Shelley Szeghi, Cultural Resource Specialist - North	(801) 629-0575 x104	(801) 597-4552

Material Specification 523—Rock for Riprap

1. Scope

This specification covers the quality of rock to be used in the construction of rock riprap.
All testing of the rock will be completed by the ENGINEER

2. Quality

Individual rock fragments must be dense, sound, and free from cracks, seams, and other defects conducive to accelerated weathering. Except as otherwise specified, the rock fragments must be angular to subrounded. The least dimension of an individual rock fragment must not be less than one-third the greatest dimension of the fragment. ASTM D4992 provides guidance on selecting rock.

Except as otherwise provided, the rock must be tested and must have the following properties:

Rock type 1

- *Bulk specific gravity (saturated surface-dry basis)*—Not less than 2.5 when tested in accordance with ASTM D6473 on samples prepared as described for soundness testing.
- *Absorption*—Not more than 2 percent when tested in accordance with ASTM D6473 on samples prepared as described for soundness testing.
- *Soundness*—The weight loss in five cycles must not be more than 10 percent when sodium sulfate is used or more than 15 percent when magnesium sulfate is used.

Rock type 2

- *Bulk specific gravity (saturated surface-dry basis)*—Not less than 2.5 when tested in accordance with ASTM D6473 on samples prepared as described for soundness testing.
- *Absorption*—Not more than 2 percent when tested in accordance with ASTM D6473 on samples prepared as described for soundness testing.
- *Soundness*—The weight loss in five cycles must be not more than 20 percent when sodium sulfate is used or more than 25 percent when magnesium sulfate is used.

Rock type 3

- *Bulk specific gravity (saturated surface-dry basis)*—Not less than 2.3 when tested in accordance with ASTM D6473 on samples prepared as described for soundness testing.
- *Absorption*—Not more than 4 percent when tested in accordance with ASTM D6473 on samples prepared as described for soundness testing.
- *Soundness*—The weight loss in five cycles must be not more than 20 percent when sodium sulfate is used or more than 25 percent when magnesium sulfate is used.

3. Methods of soundness testing

Rock cube soundness—The sodium or magnesium sulfate soundness test for all rock types (1, 2, or 3) must be performed on a test sample of 5,000 ± 300 grams of rock fragments, reasonably uniform in size and cubical in shape, and weighing, after sampling, about 100 grams each. They must be obtained from rock samples that are representative of the total rock mass, as noted in ASTM D4992, and that have been sawed into slabs as described in ASTM D5121. The samples must further be reduced in size by sawing the slabs into cubical blocks. The thickness of the slabs and the size of the sawed fragments must be determined by the size of the available test apparatus and as necessary to provide, after sawing, the approximate 100-gram samples. The cubes must undergo five cycles of soundness testing in accordance with ASTM C88.

Internal defects may cause some of the cubes to break during the sawing process or during the initial soaking period. Do not test any of the cubes that break during this preparatory process. Such breakage, including an approximation of the percentage of cubes that break, must be noted in the test report.

After the sample has been dried following completion of the final test cycle and washed to remove the sodium sulfate or magnesium sulfate, the loss of weight must be determined by subtracting from the original weight of the sample the final weight of all fragments that have not broken into three or more fragments.

The test report must show the percentage loss of the weight and the results of the qualitative examination.

Rock slab soundness—When specified, the rock must also be tested in accordance with ASTM D5240. Deterioration of more than 25 percent of the number of blocks is cause for rejection of rock from this source. Rock must also meet the requirements for average percent weight loss stated below.

- For projects located north of the Number 20 Freeze-Thaw Severity Index Isoline (fig. 523–1), unless otherwise specified, the average percent weight loss for Rock Type 1 must not exceed 20 percent when sodium sulfate is used or 25 percent when magnesium sulfate is used. For Rock Types 2 and 3, the average percent weight loss must not exceed 25 percent for sodium sulfate soundness or 30 percent for magnesium sulfate soundness.
- For projects located south of the Number 20 Freeze-Thaw Severity Index Isoline, unless otherwise specified, the average percent weight loss for Rock Type 1 must not exceed 30 percent when sodium sulfate is used or 38 percent when magnesium sulfate is used. For Rock Types 2 and 3, the average percent weight loss must not exceed 38 percent for sodium sulfate soundness or 45 percent for magnesium sulfate soundness.

Material Specification 523 Rock for Riprap (continued)

Figure 523–1 Number 20 Freeze-Thaw Severity Index Isoline (map approximates the map in ASTM D5312)

4. Field durability inspection

Rock that fails to meet the material requirements stated above (if specified), may be accepted only if similar rock from the same source has been demonstrated to be sound after 5 years or more of service under conditions of weather, wetting and drying, and erosive forces similar to those anticipated for the rock to be installed under this specification.

A rock source may be rejected if the rock from that source deteriorates in less than 5 years under similar use and exposure conditions expected for the rock to be installed under this specification, even though it meets the testing requirements stated above.

Deterioration is defined as the loss of more than one-quarter of the original rock volume, or severe cracking that would cause a block to split. Measurements of deterioration are taken from linear or surface area particle counts to determine the percentage of deteriorated blocks. Deterioration of more than 25 percent of the pieces is cause for rejection of rock from the source.

5. Grading

The rock must conform to the specified grading limits after it has been placed within the matrix of the rock riprap. Grading tests must be performed, as necessary, according to ASTM D5519, Method A, B, or C, as applicable.

CONSTRUCTION SPECIFICATION

8. MOBILIZATION

1. SCOPE

The work shall consist of the mobilization of the Contractor's forces and equipment necessary for performing the work required under the contract.

It shall include the purchase of contract bonds, insurance, transportation of personnel, equipment, and operating supplies to the site; establishment of office, buildings, traffic control, construction signing in accordance with the “Manual On Uniform Traffic Control Devices", and all other preparatory work at the site.

It shall not include mobilization for any specific item of work for which payment for mobilization is provided elsewhere in the contract.

This specification covers mobilization of work required by the contract at the time of award. If additional mobilization costs are incurred during performance of the contract as a result of change or added items of work for which the Contractor is entitled to an adjustment in contract price, compensation for such costs will be included in the price adjustment for the items of work changed or added.

2. PAYMENT

Payment will be made as the work proceeds, after presentation of invoices by the contractor showing his own mobilizations costs and evidence of the charges of suppliers, subcontractors, and others for mobilization work performed by them. If the total of such payments is less than the contract lump sum for mobilization, the unpaid balance will be included in the final contract payment. Total payment will be the lump sum contract price for mobilization, regardless of actual cost to the Contractor.

Payment will not be made under this item for the purchase costs of materials having a residual value, the purchase costs of materials to be incorporated into the project, or the purchase costs of operating supplies.

Payment of the lump sum contract price for mobilization will constitute full compensation for all labor, materials, equipment, and all other items necessary and incidental to completion of the work.

Compensation for any item of work described in the contract but not listed on the bid schedule will be included in the payment for the item or work to which it is made subsidiary.
Such items and the items to which they are made subsidiary are identified in Section 3 of this

specification.

3. ITEMS OF WORK AND CONSTRUCTION DETAILS

Items of work to be performed in conformance with this specification and the construction details are:

a. Bid Item 1 - Mobilization

1. This item shall consist of the mobilization of the Contractor's forces, obtaining insurance, bonds, traffic control and equipment, as defined in Section 1, as required for performing the work under this contract.

2. Compensation for installing all traffic safety signing and construction warning signs required for work on State and County rights-of-way will be paid for in this bid item in accordance with **the Manual on Uniform Traffic Control Devices (MUTCD).**

3. Through traffic will be maintained during the construction period.

4. Payment will be made in accordance with Section 2.

CONSTRUCTION SPECIFICATION

13. CLEARING AND GRUBBING

1. SCOPE

The work will consist of the clearing and grubbing of designated areas by removal and disposal of trees, snags, logs, stumps, shrubs, and rubbish.

2. MARKING

The limits of the areas to be cleared and grubbed will be marked by means of stakes, flags, tree markings, or other suitable methods. Trees to be left standing and uninjured will be designated by special markings placed on the trunks at a height of about six feet above the ground surface.

3. REMOVAL

All trees, shrubs and brush within the construction area as shown on the drawings will be removed. Unless otherwise specified, all stumps, roots, and root clusters having a diameter of one inch or larger will be grubbed and removed.

4. DISPOSAL

All material removed will be disposed of by the Contractor at locations shown on the drawings and approved by the Engineer.

5. MEASUREMENT AND PAYMENT

(Method 1) For items of work for which specific unit prices are established in the contract, the cleared and grubbed areas will be measured to the nearest 0.1 acre. Payment for clearing and grubbing will be made at the contract unit price and will constitute full compensation for all labor, equipment, tools, and all other items necessary and incidental to the completion of the work.

(Method 2) For items of work for which specific unit prices are established in the contract, each tree, stump and snag having a diameter of 4-inches or greater and each log having a diameter of 4-inches or greater and length of 10-feet or greater will be measured prior to removal. The size of each tree and snag will be determined by measuring its trunk at breast height above the natural ground surface. The size of each log will be

determined by measuring the butt and by measuring its length from butt to tip. The size of each stump will be measured at the top. Diameter will be determined by dividing the measured circumference by 3.14.
Payment for clearing and disposal of each tree, stump and snag having a diameter of 4-inches or greater and each log having a diameter of 4-inches or greater and a length of 10-feet or greater will be made at the contract unit price for its size designation as determined by the following schedule:

Measured Diameter	Size Designation
4 inches to 8 inches	6-inch size
Over 8 inches to 12 inches	10-inch size
Over 12 inches to 24 inches	18-inch size
Over 24 inches to 36 inches	30-inch size
Over 36 inches to 60 inches	48-inch size
Over 60 inches	60-inch size

The sum of such payments will constitute full compensation for all labor, equipment, tools, and all other items necessary and incidental to the work of completely clearing and grubbing the designated areas, including clearing, grubbing, and disposal of smaller trees, stumps, snags, and logs and brush, shrubs, roots and rubbish.

(Method 3) For items of work for which specific lump sum prices are established in the contract, payment for clearing and grubbing will be made at the contract lump sum price. Such payment will constitute full compensation for all labor, equipment, tools, and all other items necessary and incidental to completion of the work.

(Use with all Methods) Compensation for any item of work described in the contract but not listed in the bid schedule will be included in the payment for the item of work to which it is made subsidiary. Such items and the items to which they are made subsidiary are identified in Section 6 of this specification.

6. ITEMS OF WORK AND CONSTRUCTION DETAILS

a. Bid Item 2, Clearing and Grubbing

1. This item will consist of removing and disposing of all trees, brush, and shrubs necessary to construct the structures and channels in the areas as shown on the drawings or as directed by the Engineer.

2. Contractor will be required to dispose of any debris that cannot be mulched.

3. Debris and trees that can be mulched will be spread evenly over areas to be reseeded.

4. Contractor will be required to dispose of all trees and rubbish that cannot be mulched. Alternate disposal area is located on PacifiCorp property south of the Huntington Power Plant as shown on the drawings. The Engineer will direct the Contractor as to the specific location of the disposal area.

5. Measurement and Payment will be by Method 3.

CONSTRUCTION SPECIFICATION

16. MEMBRANE LINER

1. SCOPE

The work covered by these specifications consists of furnishing and installing a synthetic rubber membrane in the canal as shown on the drawings or as directed by the Engineer. All work shall be done in strict accordance with the drawings and these specifications and be subject to the terms and conditions of the contract.

2. MATERIALS

The materials supplied under these specifications shall be first quality products designed and manufactured specifically for the purposes of this work and which have been satisfactorily demonstrated by prior use to be suitable and durable for such purposes. The Contractor shall, at the time of bidding, supply the Engineer with the name of the lining fabricator and later, a certified test report from the sheeting producer that the sheeting meets these specifications for durable liner and conditions of the contract.

3. INSTALLATION OF MEMBRANE LINER

The lining shall be placed over the prepared surfaces to be lined in such manner as to assure minimum handling. It shall be sealed to all concrete structures and other openings through the lining in accordance with details shown on the drawings submitted by the Contractor and approved by the Engineer. The lining shall be closely fitted and sealed around inlets, outlets, and other projections through the lining. Any portion of lining damaged during installation by any cause shall be removed or repaired by using an additional piece of lining, as specified hereafter.

4. Field Joints

Lap joints shall be used to seal factory-fabricated linings together in the field. All field joints between sections of lining shall be made on a supporting smooth surface such as a board. Unless the weather is warm and the sun shining brightly, heat guns shall be sued to made the sealing temperature at least 100 degrees Fahrenheit. Field seams shall be rolled during heating to effect a satisfactory bond of full strength. The lab joints shall be formed by lapping the edges of pieces a minimum of 4-inches. The contact surfaces of the pieces shall be wiped clean to remove all dirt, dust, moisture, or other foreign materials.

Sufficient bonding solution shall be applied to both contact surfaces in the joint area and the two surfaces pressed together and rolled. Any wrinkles shall be smoothed out and any cut edges of the reinforced material shall be sealed with a flood coat of bonding solution to prevent wicking.

5. Joints to Structures

All curing compounds and coating shall be completely removed from the joints area. Joining of liner to concrete shall be made with adhesive and mechanical fasteners. Unless otherwise shown on the drawings, the minimum width of concrete shelf provided for the cement joint shall be 4-inches. For all shapes like pipe boots that require extensibility, 45 mil, 6 ply material shall be used.

6. Repairs to Liner

Any necessary repairs to the lining material shall be parched with the lining material itself and bonding solution. The bonding solution shall be applied to the contact surfaces of both the patch and lining to be repaired and the two surfaces pressed together immediately, heated, and rolled. Any wrinkles shall be smoothed out.

7. Quality of Workmanship

All joints on completion of the work shall be tightly bonded. Any lining surface injury due to scuffing, penetration by foreign objects, or distress from rough subgrade shall, as directed by the Engineer, be replaced or covered and sealed with an additional layer of lining material of the proper size.

8. ITEMS OF WORK AND CONSTRUCTION DETAILS

Items of work to be performed in conformance with this specification and the construction details are:

a. Bid Item 3, Geomembrane Liner, 60 Mil Textured HDPE (double sided texture)

1. These items shall consist of furnishing and placing the Geomembrane Liner, Geotextile Fabric and the ancillary items to the lines and grades shown on the drawings. The Contractor will provide all labor, materials and equipment.

2. The Contractor will furnish and install the Geomembrane Liner 60 Mil textured HDPE and install the Geotextile fabric 11 oz non-woven, Mirafi

180 N or equal. The Contractor will provide all labor, equipment and other items necessary for installation.

3. Ancillary items will include stainless steel bar, 1 ½" x 3/16" bolts and gasket (for attaching to all of the concrete structures). Also sand bags to stop any movement of the liner due to wind and HDPE weld rod as needed for repairs. This is subsidiary to this item.

4. The lining shall be anchored at the top of the slope by a covered trench as shown on the drawings. The liner attachment to rigid objects shall be in accordance with manufacturer's recommendations and as shown on the drawings.

5. All liner seams shall be overlapped and bonded together in accordance with the manufacturer's recommendation. The square foot listed on the bid schedule does not include overlaps. Contractor will need to make allowance for these overlaps. The sealed joints shall make a watertight seal. The Contractor shall be required to repair leaks in the lining.

6. The Fabric will be placed above and beneath the liner. The fabric shall be a minimum weight of 11 oz/sq.yd. The fabric shall overlap at the joints in accordance with the manufacturer's recommendations and the placement details as shown on the drawings. The square foot listed on the bid schedule does not include overlaps. Contractor will need to make allowance for these overlaps. The fabric will be a part of this bid item and not paid for separately.

7. Measurement will be by the square foot of the liner and fabric installed and as measured along the centerline of the canal.

8. Payment for the liner and fabric installed will be made at the contract price. Such payment shall be considered full and complete compensation for all labor, materials, equipment and all other items necessary to install all liners, fabric, attachment devices, and all other items necessary or incidental to the completion of the liner installation.

CONSTRUCTION SPECIFICATION

23. EARTH FILL

1. SCOPE

The work shall consist of the construction of earth embankments and other earth fills required by the drawings and specifications.

2. MATERIALS

All fill materials shall be obtained from required excavations and designated borrow areas. The selection, blending, routing and disposition of materials in the various fills shall be subject to approval by the Engineer.

Fill materials shall contain no sod, brush, roots or other perishable materials. Rock particles larger than the maximum size specified for each type of fill shall be removed prior to compaction of the fill.

The type of material used in the various fills shall be as listed and described in the specifications and drawings.

3. FOUNDATION PREPARATION

Foundations for earth fill shall be stripped to remove vegetation and other unsuitable materials or shall be excavated as specified.

Except as otherwise specified, earth foundation surfaces shall be graded to remove surface irregularities and shall be scarified parallel to the axis of the fill or otherwise acceptably scored and loosened material shall be controlled as specified for the earth fill, and the surface materials of the foundation shall be compacted and bonded with the first layer of earth fill as specified for subsequent layers of earth fill.

Earth abutment surfaces shall be free of loose, uncompacted earth in excess of two inches in depth normal to the slope and shall be at such a moisture content that the earth fill can be compacted against them to effect a good bond between the fill and the abutments.

Rock foundation and abutment surfaces shall be cleared of all loose materials by hand or other effective means and shall be free of standing water when fill is placed upon them.

Occasional rock outcrops in earth foundations for earth fill, except in dams and other structures designed to restrain the movement of water, shall not require special treatment if

they do not interfere with compaction of the foundation of initial layers of the fill or the bond between the foundation and the fill.

Foundation and abutment surfaces shall be not steeper than 1 horizontal to 1 vertical unless otherwise specified. Test pits or other cavities shall be filled with compacted earth fill conforming to the specifications for the earth fill to be placed upon foundation.

4. PLACEMENT

Fill shall not be placed until the required excavation and foundation preparation have been completed and the foundation has been inspected and approved by the Engineer. Fill shall not be placed upon a frozen surface, nor shall snow, ice, or frozen material be incorporated in the fill.

Fill shall be placed in approximately horizontal layers. The thickness of each layer before compaction shall not exceed the maximum thickness specified. Materials placed by dumping in piles or windows shall be spread uniformly to no more than the specified thickness before being compacted. Hand compacted fill, including fill compacted by manually directed power tampers, shall be placed in layers whose thickness before compaction does not exceed 4-inches.

Adjacent to structures, fill shall be placed in a manner which will prevent damage to the structures and will allow the structures to assure the loads from the fill gradually and uniformly. The height of the fill adjacent to a structure shall be increased at approximately the same rate on all sides of the structure.

Earth fill in dams, levees and other structures designed to restrain the movement of water shall be placed so as to meet the following additional requirements:

a. The distribution of materials throughout each zone shall be essentially uniform, and the fill shall b free from lenses, pockets, streaks or layers of material differing substantially in texture or gradation from the surrounding material.

b. If the surface of any layer becomes too hard and smooth for proper bond with the succeeding layer, it shall be scarified parallel to the axis of the fill to a depth of not less than 2 inches before the next layer is placed.

c. The top surface of embankments shall be maintained approximately level during construction, except that a crown of cross-slope of not less than 2 percent shall be maintained to insure effective drainage, and except as otherwise specified for drain fill zones. If the drawings or specifications require or the Engineer directs that the fill be placed at a higher level in one part of an embankment than another, the top surface of each part shall be maintained as specified above.

d. Dam embankments shall be constructed in continuous layers from abutment to abutment except where openings to facilitate construction, or to allow the passage of stream flow during construction is specifically authorized in the contract.

e. Embankment built at different levels as described under c or d above shall be constructed so that the slope of the bonding surfaces between embankment to be placed is not steeper than 3 feet horizontal to 1 foot vertical. The bonding surface of the embankment in place shall be stripped of all loose material, and shall be scarified, moistened and recompacted when the new fill is placed against it as needed to insure a good bond with the new fill and to obtain the specified moisture content and density in the junction of the place and new fill.

5. CONTROL OF MOISTURE CONTENT

During placement and compaction of fill, the moisture content of the materials being placed shall be maintained within the specified range.

The application of water to the fill materials shall be accomplished at the borrow areas insofar as practicable. Water may be applied by sprinkling the materials after placement on the fill, if necessary. Uniform moisture distribution shall be obtained by dicing, blending or other approved methods prior to compaction of the layer.

Material that is too wet when deposited on the fill shall either be removed or be dried to the specified content prior to compaction.

If the top surface of the preceding layer of compacted fill or a foundation or abutment surface in the zone of contact with the fill becomes too dry to permit suitable bond it shall be scarified and moistened by sprinkling to an acceptable moisture content prior to placement of the next layer of fill.

6. COMPACTION

Earth fill shall be compacted according to the following requirements for the class of compaction specified:

Class A compaction. Each layer of fill shall be compacted as necessary to make the density of the fill matrix not less than the minimum density specified. The fill matrix is defined as the portion of the fill material finer that the maximum particle size used in the compaction test method specified.

Class B compaction. Each layer of fill shall be compacted as to a mass density not less than the minimum density specified.

Class C compaction. Each layer of fill shall be compacted by the specified number of passes of the type and weight of roller or other equipment specified or by an approved equivalent method. Each pass shall consist of at least one passage of the roller wheel or drum over the entire surface of the layer.

Fill adjacent to structures shall be compacted a density equivalent to that of the surrounding fill by means of hand tamping if permitted by the Contracting Officer, or manually directed power tampers or plate vibrators. Heavy equipment shall not be operated within 2 feet of any structure. Vibrating rollers shall not be operated within 5 feet of any structure. Compaction by means of drop weights operating from a crane or hoist will not be permitted.

The passage of heavy equipment will not be allowed: (1) over cast-in-place conduits prior to 14 days after placement of the concrete; (2) over cradled precast conduits prior to 7 days after placement of the concrete cradle, or (3) over any type of conduit until the backfill has been placed above the top surface of the structure to a height equal to one-half the clear span width of the structure or pipe or 2 feet, whichever is greater.

Compacting of fill adjacent to structures shall not be started until the concrete has attained the strength specified in Specification No. 32, Concrete, for this purpose.

The strength will be determined by compression testing of test cylinders cast by the Engineer for this purpose and cured at the work site in the manner specified in ASTM Method C 31 for determining when a structure may be put into service.

When the required strength of the concrete is not specified as described above, compaction of fill adjacent to structures shall not be started until the following time intervals have elapsed after placement of the concrete.

Structure	Time Interval
Retaining walls and counterforts	14 days
Walls backfilled on both sides simultaneously	7 days
Conduits and spillway risers, cast-in-place (with inside forms in place)	7 days
Conduits and spillway risers, cast-in-place (inside forms removed)	14 days

Structure	Time Interval
Conduits, precast & cradled	2 days
Conduits, precast & bedded	1 day
Antiseep collars and cantilever outlet bents	3 days

7. REMOVAL AND PLACEMENT OF DEFECTIVE FILL

Fill placed at densities lower than the specified minimum density or at moisture contents outside the specified acceptable range of moisture content or otherwise not conforming to the requirements of the specifications shall be reworked to meet the requirements or removed and replaced by acceptable fill. The replacement fill and the foundation, abutment and fill surfaces upon which it is placed shall conform to all requirements of this specification for foundation preparation, approval, placement, moisture control and compaction.

8. TESTING

During the course of the work, the Contractor will perform such tests as are required to identify materials, to determine compaction characteristics, to determine content, and to determine density of fill in place. These tests performed by the Contractor will be used to verify that the fills conform to the requirements of the specifications.

Densities of fill requiring Class A compaction will be determined by the Engineer in accordance with ASTM 15570 (or by equivalent methods), except that the volume and moist weight of included rock particles larger than those used in the compaction test method specified for the type of fill will be determined and deducted from the volume and moist weight of the total sample prior to computation of density. The density so computed will be used to determine the percent compaction of the fill matrix.

9. MEASUREMENT AND PAYMENT

For items of work for which specific unit prices are established in the contract, the volume of each type and compaction class of earth fill within the specified zone boundaries and pay limits will be measured and computed to the nearest cubic yard by the method of average cross-sectional end areas. Unless otherwise specified, no deduction in volume will be made for embedded conduits and appurtenances.

The pay limits shall be as defined below, with the further provision that earth fill required to fill voids resulting from over-excavation of the foundation, outside specified lines and

grades, will be included in the measurement for payment only where such over-excavation is directed by the Engineer to remove unsuitable material and where the unsuitable condition is not a result of the Contractor's operations.

(Method 1) The pay limits shall be as designated on the drawings.

(Method 2) The pay limits shall be the measured surface of the foundation when approved for placement of the fill and the specified neat lines of the fill surface.

(Method 3) The pay limits shall be the measured surface of the foundation when approved for placement of the fill and the measured surface of the completed fill.

(Method 4) The pay limits shall be the specified pay limits for excavation and the specified neat lines of the fill surface.

(Method 5) The pay limit shall be the specified pay limits for excavation and the measured surface of the completed fill.

(Method 6) Payment for each type and compaction class of earth fill will be made at the contract unit price for that type and compaction class of fill. Such payment will constitute full compensation for all labor, materials, equipment and all other items necessary and incidental to the performance of the work.

(Method 7) Payment for each type and compaction class of earth fill will be made at the contract unit price for that type and compaction class of fill. Such payment will constitute full compensation for all labor, materials, equipment and all other items necessary and incidental to the performance of the work, except furnishing, transportation, and applying water to the foundation and fill materials.

Water applied to the foundation and fill materials will be measured and payment will be made as specified in Construction Specification.

(Use with All Methods) Compensation for any item of work described in the contract but not listed in the bid schedule will be included in the payment for the item of work to which it is made subsidiary. Such items and the items to which they are made subsidiary are identified in Section 10 of this specification.

10. ITEMS OF WORK AND CONSTRUCTION DETAILS

Items of work to be performed in conformance with this specification and the construction details are:

a. Bid Item 4, Compacted Embankment

1. This item shall consist of furnishing, transporting and placing the embankment required to the lines and grades shown on the drawings or as directed by the Engineer.

2. The moisture content of the material at the time of compaction shall be between +2% optimum and -2% of optimum.

3. Contract or may use suitable on site material. The Contractor will be required to process the material in order to obtain required gradation.

4. Compaction shall be by Method A. Compaction requirements will be 95% of the maximum density as determined in accordance with ASTM Designation 698.

5. Lift thickness shall not exceed 12-inches prior to compaction.

6. Gradation Requirements:

Sieve Size	**Percent Passing**
6-inch	100
3-inch	65-100
No. 200	5-65

7. Contractor shall place one foot of excavation material as top soil on the downstream side of the embankment material. The cost of placing this material is supplemental to this bid item.

8. Measurement will be by Method 2. The finished neatline is measured after compaction has been completed.

9. Payment will be at the contract unit price. Such payment will constitute full and complete compensation for all labor, materials, equipment, transportation, compaction and all other items necessary and incidental to the completion of the work.

c. Bid Item 5, Untreated Base Course

1. This item shall consist of furnishing and placing untreated base course on the finished surface of the dike.

2. The depth of untreated base course is 6-inches.

TABLE 1 ACCEPTANCE SCHEDULE FOR GRADATION (Percentage Points) – IDEAL GRADATION		
SIEVE SIZE	**PAY FACTOR**	**DEVIATION FROM THE IDEAL GRADATION**
½ inch & larger	1.00	0-6.0
	0.95	6.0-9.0
	0.90	9.0-12.0
	0.80	12.0-14.0
	0.70	14.0-15.0
No. 4	1.00	0-6
	0.95	6.1-7.0
	0.90	7.1-7.7
	0.80	7.8-8.0
	0.70	8.1-8.8
No. 16	1.00	0-4.0
	0.95	4.0-5.4
	0.90	5.5-6.0
	0.80	6.1-7.0
	0.70	7.1-7.7
No. 50	1.00	0-5.2
	0.95	5.3-6.0
	0.90	6.1-6.5
	0.80	6.6-7.4
	0.70	7.5-8.1
No. 200	1.00	0-2.0
	0.95	2.0-2.6
	0.90	2.7-2.9
	0.80	3.0-3.3
	0.70	3.4-3.6

gradation requirements are as follows:

1 ½ - inch Gradation

Sieve Size	% Passing Gradation Band

1 ½”	100
1"	95-100
¾”	77-85
1/2"	72-80
3/8”	65-75
#4	52-65
#16	32-40
#200	9-11

4. Price Adjustments - Gradation. The computation of the adjusted unit price will be based upon the minimum pay factor determined from Table 1 on any sieve size based on the Ideal Gradation.

   a. The Engineer may order the removal of the material if the acceptance tests deviate on any sieve size more than the 0.70 pay factor from the gradation specifications outlined.

   b. The area requiring adjustment will be based on that day’s placement.

   c. If the material is allowed to remain the pay factor will be 0.50.

TABLE 1
ACCEPTANCE SCHEDULE FOR GRADATION
(Percentage Points) – IDEAL GRADATION

SIEVE SIZE	PAY FACTOR	DEVIATION FROM THE IDEAL GRADATION
½ inch & larger	1.00	0-6.0
	0.95	6.0-9.0
	0.90	9.0-12.0
	0.80	12.0-14.0
	0.70	14.0-15.0
No. 4	1.00	0-6
	0.95	6.1-7.0
	0.90	7.1-7.7
	0.80	7.8-8.0
	0.70	8.1-8.8
No. 16	1.00	0-4.0
	0.95	4.0-5.4
	0.90	5.5-6.0
	0.80	6.1-7.0

	0.70	7.1-7.7
No. 50	1.00	0-5.2
	0.95	5.3-6.0
	0.90	6.1-6.5
	0.80	6.6-7.4
	0.70	7.5-8.1
No. 200	1.00	0-2.0
	0.95	2.0-2.6
	0.90	2.7-2.9
	0.80	3.0-3.3
	0.70	3.4-3.6

5. The base course gravel shall uniformly be mixed with water prior to compaction.

6. Compaction shall be by Class A and will be moistened and compacted to acquire at least ninety-five percent (95%) of the maximum density as determined in accordance with ASTM 698. If placed on native ground, the earth foundation will be moistened and compacted to acquire at least ninety-five percent (95%) of the maximum density as determined in accordance with ASTM 698.

7. The aggregate shall have a percentage wear not exceeding 50% when tested in accordance with AASHTO designation T-96. Certification that the aggregate meets this wear test will be required of the Contractor prior to his placement of the base course.

8. The moisture content of the material at the time of compaction shall be between + 2% optimum and - 2% of optimum.

9. The Contractor shall select the material source and submit certification the material meets these specifications to the Engineer for approval.

10. All untreated base course will be compacted by a Cat CS54 Vibratory compactor or larger compactor.

11. The material will be placed on the dike above the finished grade.

12. Measurement will be made by the cubic yard of material placed.

13. Payment will be made by the contract unit price. Such payment will be full and complete compensation for all labor, materials, equipment and all other items necessary and incidental to the performance of the work.

CONSTRUCTION SPECIFICATION

32. CONCRETE FOR MINOR STRUCTURES

1. SCOPE

The work will consist of furnishing, forming, placing, finishing and curing portland cement concrete as required to build the structure named in Section 24 of this Specification.

2. MATERIALS

Portland cement will conform to the requirements of ASTM Specification C-150 for the specified type.

Aggregates will conform to the requirements of ASTM Specification C-33 unless otherwise specified. The grading of coarse aggregates will be as specified in Section 24.

Water will be clean and free from injurious amounts of oil, salt, acid, alkali, organic matter or other deleterious substances.

Preformed expansion joint filler will conform to the requirements of ASTM Specification D 1752.

Waterstops will conform to the requirements of the applicable ASTM specification for the specified kinds.

3. CLASS OF CONCRETE

Concrete for minor structure will be classified as follows:

Class of Concrete	Maximum Water Content (gallons/bag)	Minimum Cement Content (bags/cu.yd.)
4500	7	6 1/2

4. AIR CONTENT AND CONSISTENCY

Unless otherwise specified, the slump will be 3 to 5 inches. If air entrainment is specified, the air content by volume will be 5 to 7.5 percent of the volume of the concrete. When specified or when directed by the Engineer, a water-reducing, set-retarding

admixture approved by the Engineer will be used.

5. **DESIGN OF THE CONCRETE MIX**

The proportions of the aggregates will be such as to produce a concrete mixture that will work readily into the corners and angles of the forms and around reinforcement when consolidated, but will not segregate or exude free water during consolidation.

Prior to placement of concrete, the Contractor will furnish the Engineer, for approval, a statement of the materials and mix proportions (including admixtures, if any) he intends to use. The statement will include evidence satisfactory to the Engineer that the materials and proportions will produce concrete conforming to this specification. The materials and proportions so stated will constitute the "job mix." After a job mix has been approved, neither the source, character or grading of the aggregates nor the type or brand of cement or admixture will be changed without prior notice to the Engineer. If such changes are necessary, no concrete containing such new or altered materials will be placed until the Engineer has approved a revised job mix.

6. **INSPECTION AND TESTING**

The Engineer will have free entry to the plant and equipment furnishing concrete under the contract. Proper facilities will be provided for the Engineer to inspect materials, equipment and processes and to obtain samples of the concrete. All tests and inspections will be conducted so as not to interfere unnecessarily with manufacture and delivery of the concrete.

7. **HANDLING AND MEASUREMENT OF MATERIALS**

Materials will be stockpiled and batched by methods that will prevent segregation or contamination of aggregates and insure accurate proportioning of the ingredients of the mix.

Cement will be measured by weight or in bags of 94 pounds each. When cement is measured in bags, no fraction of a bag will be used unless weighed.

Aggregates will be measured by weight. Mix proportions will be based on saturated, surface-dry weights. The batch weight of each aggregate will be the required saturated, surface- dry weight plus the weight of surface moisture it contains.

Water will be measured, by volume or by weight, to an accuracy within one percent of the total quantity of water required for the batch.

Admixtures will be measured within a limit of accuracy of three percent.

8. MIXERS AND MIXING

Concrete will be uniform and thoroughly mixed when delivered to the work. Variations in slump of more than 1 inch within a batch will be considered evidence of inadequate mixing and will be corrected by increasing mixing time or other means.

For stationary mixers, the mixing time after all cement and aggregates are in the mixer drum will not be less than 1 ½ minutes. When concrete is mixed in a truck mixer, the number of revolutions of the drum or blades at mixing speed will be not less than 70 nor more than 100

No mixing water in excess of the amount called for by the job mix will be added to the concrete during mixing or hauling or after arrival at the delivery point.

9. FORMS

Forms will be of wood, plywood, steel or other approved material and will be mortar tight. The forms and associated false work will be substantial and unyielding and will be constructed so that the finished concrete will conform to the specified dimensions and contours. Form surfaces will be smooth and free from holes, dents, sags or other irregularities. Forms will be coated with a nonstaining form oil before being set into place.

Metal ties or anchorages within the forms will be equipped with cones, she-bolts or other devices that permit their removal to a depth of at least one inch without injury to the concrete. Ties designed to break off below the surface of the concrete will not be used without cones.

All edges that will be exposed to view when the structure is completed will be chamfered, unless finished with molding tools as specified in Section 18.

10. PREPARATION OF FORMS AND SUBGRADE

Prior to placement of concrete the forms and subgrade will be free of chips, sawdust debris, water, ice, snow, extraneous oil, mortar, or other harmful substances or coatings.

Any oil on the reinforcing steel or other surfaces required to be bonded to the concrete will be removed. Rock surfaces will be cleaned by air-water cutting, wet sandblasting or wire brush scrubbing, as necessary, and will be wetted immediately prior to placement of concrete. Earth surfaces will be firm and damp. Placement of concrete on mud, dried earth, uncompacted fill, or frozen subgrade will not be permitted.

Unless otherwise specified, when concrete is to be placed over drain fill, the contact surface of the drain fill will be covered with a layer of asphalt-impregnated building paper or polyvinyl sheeting prior to placement of the concrete. Forms for weepholes will extend through this layer into the drain fill.

Items to be embedded in the concrete will be positioned accurately and anchored firmly.

Weepholes in walls or slabs will be formed with nonferrous materials.

11. CONVEYING

Concrete will be delivered to the site and discharged into the forms within 1 ½ hours after the introduction of the cement to the aggregates. In hot weather or under conditions contributing to quick stiffening of the concrete, the time between the introduction of the cement to the aggregates and discharge will not exceed 45 minutes. The Engineer may allow a longer time, provided the setting time of the concrete is increased a corresponding amount by the addition of an approved set-retarding admixture. In any case, concrete will be conveyed from the mixer to the forms as rapidly as practicable by methods that will prevent segregation of the aggregates or loss of mortar. Concrete will not be dropped more than five feet vertically unless suitable equipment is used to prevent segregation.

12. PLACING

Concrete will not be placed until the subgrade, forms and steel reinforcement have been inspected and approved. No concrete will be placed except in the presence of the Engineer. The Contractor will give reasonable notice to the Engineer each time he intends to place concrete. Such notice will be far enough in advance to give the Engineer adequate time to inspect the subgrade, forms, steel reinforcement and other preparations for compliance with the specifications before concrete is delivered for placing.

The concrete will be deposited as closely as possible to its final position in the forms and will be worked into the corners and angles of the forms and around all reinforcement and embedded items in a manner to prevent segregation of aggregates or excessive laitance. Unless otherwise specified, slab concrete will be placed to design thickness in one continuous layer. Formed concrete will be placed in horizontal layers not more than 20 inches thick. Hoppers and chutes, pipes or “elephant trunks” will be used as necessary to prevent splashing of mortar on the forms and reinforcing steel above the layer being placed.

Immediately after the concrete is placed in the forms, it will be consolidated by spading, hand tamping or vibration as necessary to insure smooth surfaces and dense concrete. Each layer will be consolidated to insure monolithic bond with the preceding layer. If the surface of a layer of concrete in place sets to the degree that it will not flow and merge

with the succeeding layer when spaded or vibrated, the Contractor will discontinue placing concrete and will make a construction joint according to the procedure specified in Section 13.

If placing is discontinued when an incomplete horizontal layer is in place, the unfinished end of the layer will be formed by a vertical bulkhead.

13. CONSTRUCTION JOINTS

Construction joints will be made at the location shown on the drawings. If construction joints are needed which are not shown on the drawings, they will be placed in locations approved by the Engineer.

Where a feather edge would be produced at a construction joint, as in the top surface of a sloping wall, an insert form will be used so that the resulting edge thickness on either side of the joint is not less than 6 inches.

In walls and columns, as each lift is completed, the top surfaces will be immediately and carefully protected from any condition that might adversely affect the hardening of the concrete.

Steel tying and form construction adjacent to concrete in place will not be started until the concrete has cured at least 12 hours. Before new concrete is deposited on or against concrete that has hardened, the forms will be retightened. New concrete will not be placed until the hardened concrete has cured at least 12 hours.

Surfaces of construction joints will be cleaned of all unsatisfactory concrete, liatance, coating or debris by washing and scrubbing with a wire brush or wire broom or by other means approved by the Engineer. The surfaces will be kept moist for at least one hour prior to placement of the new concrete.

14. EXPANSION AND CONTRACTION JOINTS

Expansion and contraction joints will be made only at locations shown on the drawings.

Exposed concrete edges and expansion and contraction joints will be carefully tooled or chamfered, and the joints will be free of mortar and concrete. Joint filler will be left exposed for its full length with clean and true edges.

Preformed expansion joint filler will be held firmly in the correct position as the concrete is placed.

When open joints are specified, they will be constructed by insertion and subsequent

removal of a wooden strip, metal plate or other suitable template in such a manner that the corners of the concrete will not be chipped or broken. The edges of open joints will be finished with an edging tool prior to removal of the joint strips.

15. WATERSTOPS

Waterstops will be held firmly in the correct position as the concrete is placed. Joints in the metal waterstops will be soldered, brazed or welded. Joints in rubber or plastic waterstops will be cemented, welded or vulcanized as recommended by the Manufacturer.

16. REMOVAL OF FORMS

Forms will not be removed without the approval of the Engineer. Forms will be removed in such a way as to prevent damage to the concrete. Supports will be removed in a manner that will permit the concrete to take the stresses due to its own weight uniformly and gradually.

17. FINISHING FORMED SURFACES

Immediately after the removal of the forms:

a. All fins and irregular projections will be removed from exposed surfaces.

b. On all surfaces, the holes produced by the removal of form ties, cone-bolts, and she-bolts, will be cleaned, wetted and filled with a dry-pack mortar consisting of one part portland cement, three parts sand that will pass a No. 16 sieve, and water just sufficient to produce a consistency such that the filling is at the point of becoming rubbery when the material is solidly packed.

18. FINISHING UNFORMED SURFACES

All exposed surfaces of the concrete will be accurately screeded to grade and then wood float finished, unless specified otherwise.

Excessive floating or troweling of surfaces while the concrete is soft will not be permitted.

The addition of dry cement or water to the surface of the screeded concrete to expedite finishing will not be allowed.

Joints and edges on unformed surfaces that will be exposed to view will be chamfered or finished with molding tools.

19. CURING

Concrete will be prevented from drying for a curing period of at least 7 days after it is placed. Exposed surfaces will be kept continuously moist for the entire period, or until curing compound is applied as specified below. Moisture will be maintained by sprinkling, flooding, or fog spraying or by covering with continuously moistened canvas, cloth mats, straw, sand, or approved material. Wood forms (except plywood) left in place during the curing period will be kept wet. Formed surfaces will be thoroughly wetted immediately after forms are removed and will be kept wet until patching and repairs are completed. Water or covering will be applied in such a way that the concrete surface is not eroded or otherwise damaged.

Concrete, except at construction joints, may be coated with an approved curing compound in lieu of continued application of moisture. The compound will be sprayed on the moist concrete surfaces as soon as free water has disappeared, but will not be applied to any surface until patching, repairs and finishing of that surface are completed. The compound will be applied at a uniform rate of not less than one gallon per 150 square feet of surface and will form a continuous adherent membrane over the entire surface. Curing compound will not be applied to surfaces requiring bond to subsequently placed concrete, such as construction joints, shear plates, reinforcing steel and other embedded items. If the membrane is damaged during the curing period, the damaged area will be re-sprayed at the rate of application specified above.

20. REMOVAL OR REPAIR

When concrete is honeycombed, damaged or otherwise defective, the Contractor will remove and replace the structure or structural member containing the defective concrete or, where feasible, correct or repair the defective parts. The Engineer will determine the required extent of removal, replacement or repair.

Prior to starting repair work the Contractor will obtain the Engineer's approval of his plan for affecting the repair. The Contractor will perform all repair work in the presence of the Engineer.

21. CONCRETE IN COLD WEATHER

Concrete will not be mixed nor placed when the daily minimum atmospheric temperature is less than 40° F unless facilities are provided to prevent the concrete from freezing. The use of accelerators or antifreeze compounds will not be allowed.

22. CONCRETE IN HOT WEATHER

The Contractor will apply effective means to maintain the temperature of the concrete below 90° F during mixing, conveying and placing.

23. MEASUREMENT AND PAYMENT

For items of work for which specific unit prices are established in the contract, concrete will be measured to the neat lines shown on the drawings and the volume of the concrete will be computed to the nearest 0.1 cubic yard. Measurement of concrete placed against the sides of an excavation without the use of intervening forms will be made only to the neat lines or pay limits shown on the drawings. No deduction in volume will be made for chamfers, rounded or beveled edges or for any void or embedded item that is less than 3 cubic feet in volume.

Payment for each item of concrete for minor structures will be made at the contract unit price or the contract lump sum, whichever is applicable, for that item. Such payment will constitute full compensation for all labor, materials, equipment, transportation, tools, forms, false work, bracing and all other items necessary and incidental to the completion of the work, except items listed for payment elsewhere in the contract.

Compensation for any item of work described in the contract but not listed in the bid schedule will be included in the payment for the item of work to which it is made subsidiary. Such items and the items to which they are made subsidiary are identified in Section 24 of this specification.

24. ITEMS OF WORK AND CONSTRUCTION DETAILS

Items of work to be performed in conformance with this specification and the construction details include:

a. Bid Item 6, Structural Concrete

1. This item will consist of furnishing and placing the required reinforced Portland cement concrete and 2-inch drain rock, to construct the structures as shown on the drawings or as directed by the Engineer.

2. All cement used will be Type V.

3. 12 inches of 2-inch drain rock will be subsidiary to this bid item and will not be paid for separately.

4. Concrete will be Class 4500.

5. Concrete mix design will be in accordance with Section 5.

6. Minimum cement content will be 6 ½ bags per cubic yard.

7. Class 2 course aggregate will be size 57 (1" to No. 4, ASTM C-33 Table II).

8. Air entrainment will be required. Air content by volume will be 5 to 7.5 percent of the volume of the concrete. Unless otherwise specified, the slump will be 3 to 5 inches.

9. Contractor will be required to apply curing compound as soon as finishing has been completed.

10. The use of chlorides is prohibited.

11. Quality control testing will be done by the Engineer.

12. Contractor will be placing concrete in cold weather. Contractor shall adhere to Section 21 of these specifications. Provisions for placing and curing concrete in a heated environment will be required.

13. Reinforcing steel will be Grade 60 and will be required as shown on the drawings. The steel will be epoxy coated. The steel will not be paid for separately, but will be subsidiary to this bid item.

14. Measurement will be by the neat line cubic yard of concrete required to complete the structures.

15. Payment will be made at the contract unit price, and will constitute full and complete compensation for all labor, materials, reinforcing steel, equipment, transportation, tools, forms, bracing and all other items necessary or incidental to the completion of the work.

b. <u>Bid Item 7, Trash Rack Structure (Installation Only)</u>

1. This item will consist of installing the Trash Rack Structure, furnished by Old Castle, as shown on the drawings. Including labor, materials, and equipment necessary to complete the work. This item will also include installing the precast wing walls and footers.

2. Contractor will provide all equipment and materials required for installation of the structure and will be paid for under this item.

3. Foundation preparation for the placement of the structure will include the construction of the concrete cutoff walls as shown on the drawing. The concrete cutoff wall will be paid for as part of bid item #6, Structural Concrete.

4. Contractor will be responsible to unload and place the structure on a prepared and compacted surface. Damaged sections will be replaced by the Contractor.

5. Contractor will be required to anchor, weld, and place all floor plates, tubes, bolts, tube supports, weld plates, etc. as detailed on Old Castle Precast drawings (attached).

6. The work will not be measured.

7. Payment will be made at the contract unit price. Such payment will constitute full compensation for all labor, materials, including excavations and backfill, equipment, transportation (unloading and placing the structure), and all other items necessary and incidental to the completion of the work.

CONSTRUCTION SPECIFICATION

34. STEEL REINFORCEMENT

1. **SCOPE**

This work will consist of furnishing reinforcing steel, bar supports, welding, tools, supplies, equipment and services and placing of concrete reinforcement of the shape and dimensions shown on the structural drawings, and as called for in these specifications.

2. **REINFORCING STEEL**

a. All reinforcing bars except column spirals, will be deformed as defined in ASTM specifications.

b. All reinforcing bars, unless noted on the structural drawings, will be Grade 60 as defined in the American Society for Testing and Materials' "Specifications for Steel Bars for Concrete Reinforcement" (A615, A616, A617) or A706.

c. Spiral reinforcing steel will be fabricated from cold drawn wire (ASTM A 82) or hot rolled plain or deformed bars conforming to ASTM A615, Grade 60, or ASTM A706.

d. Welded smooth wire fabric will conform to ASTM A185 "Welded Deformed Steel Wire Fabric for Concrete Reinforcement." (ACE Building Code limits the wire spacing to 16 inches maximum.)

3. **TIE WIRE**

The tie wire used will be black annealed wire, 16 1/2 gauge or heavier.

4. **REINFORCING BAR SUPPORTS**

Bar supports will conform to the "Bar Support Specifications" contained in "Manual of Standard Practice," as published by the Concrete Reinforcing Steel Institute.

5. **MILL TEST REPORTS**

A certified copy of mill test on each heat of reinforcing steel delivered showing physical and chemical analysis will be provided, upon request, at time of shipment.

6. SURFACE CONDITION

Metal reinforcement at the time concrete is place will be free from mud, oil, or other nonmetallic coatings that adversely affect bonding capacity.

Metal reinforcement, except prestressing steel, with rust, mill scale, or a combination of both will be considered as satisfactory, provided the minimum dimensions, including height of deformations and weight of hand wire brushed test specimen, are not less than the applicable ASTM specification requirements.

7. PLACING DRAWINGS

The contractor will supply placing drawings and bar lists in accordance with latest revision of "Manual of Standard Practice for Detailing Reinforced Concrete Structures" (ACI 315), as published by the American Concrete Institute.

8. STANDARD PRACTICE

All requirements of concrete reinforcement not covered in these specifications or on the structural drawings will be in accordance with "Manual of Standard Practice," as published by the Concrete Reinforcing Steel Institute.

a. All hooks will conform to bend dimensions defined as "Standard Hooks" in "Manual of Standard Practice," as published by the Concrete Reinforcing Steel Institute, unless otherwise shown on the structural drawings.

b. Reinforcing bars will not be bent or straightened in a manner that will injure the material.

c. Reinforcing bars will conform accurately to within the fabrication tolerances shown in "Manual of Standard Practice," as published by the Concrete Reinforcing Steel Institute.

9. PLACING REINFORCING STEEL

a. The placement of bars should conform to the recommended practices in "Placing Reinforcing Bars," as published by the concrete Reinforcing Steel Institute.

b. Bars should be securely tied to prevent displacement during the concreting operation and all dowels must be wired in place before depositing concrete. Chairs will be used for spacing of reinforcing steel.

c. All splicing of bars, concrete cover, placing tolerances and bar spacings will conform to "Building Code Requirements for Reinforced Concrete" (ACI 318), as published by the American Concrete Institute, and to recommended practices in "Reinforcement Anchorages and Splices" by the concrete Reinforcing Steel Institute.

d. The minimum compression dowel embedment will be 22 x bar diameter.

e. The minimum tensional development length will be:

Bar Size	Top Bars	Other Bars
#4	17"	12"
#5	21"	15"
#6	32"	23"
#8	42"	30"

10. MEASUREMENT AND PAYMENT

(Method 1) For items of work for which specific unit prices are established in the contract, the weight of reinforcement placed in the concrete in accordance with the drawings will be determined to the nearest pound by computation from the placing drawings. Measurement of hooks and bends will be based on the requirements of ACI Standard 315. Computation of weights of reinforcement will be based on the unit weights established in Tables 34-1, 34-2, and 34-3. The arc of welded wire fabric reinforcement placed in the concrete in accordance with the drawings will be determined to the nearest square foot by computation from the placing drawings with no allowance for laps. The weight of steel reinforcing in extra spliced or extra-length splices approved for the convenience of the Contractor or the weight of supports and ties will not be included in the measurement for payment.

Payment for furnishing and placing reinforcing steel will be made at the contract unit price. Such payment will constitute full compensation for all labor, materials, equipment and all other items necessary and incidental to the completion of the work including preparing and furnishing bar schedules, lists, or diagrams; furnishing and attaching ties and supports; and furnishing, transporting, cutting, bending, cleaning, and securing all reinforcement.

(Method 2) For items of work which specific unit prices are established in the contract, the weight of bar reinforcement placed in the concrete in accordance with the drawings will be determined to the nearest pound by computation from the placing drawings. Measurement of hooks and bends will be based on the requirements of ACI Standard 315. Computation of weights of bar reinforcement will be based on the unit weights established in Table 34-1. The weight of steel reinforcing in extra splices or extra-length splices approved for the convenience of Contractor or the weight of supports and ties will not be included in the measurement for payment.

The area of welded wire fabric reinforcement placed in the concrete in accordance with the drawings will be determined to the nearest square foot be computation from the placing drawings with no allowance for laps.

Payment for furnishing and placing bar reinforcing steel will be made at the contract unit price for bar reinforcement. Payment for furnishing and placing welded wire fabric reinforcing steel will be made at the contract unit price for welded wire fabric reinforcement. Such payment will constitute full compensation for all labor, materials, equipment, and all other items necessary and incidental to the completion of the work including preparing and furnishing bar schedules, lists of diagrams; furnishing and attaching ties and supports; and furnishing, transporting, cutting, bending, cleaning, and securing all reinforcement.

(Use with Either Method) Compensation for any item of work described in the contract but not listed in the bid schedule will be included in the payment for the item of work to which it is made subsidiary. Such items and items to which they are made subsidiary are identified in Section 8 of this specification.

11. ITEMS OF WORK AND CONSTRUCTION DETAILS

Items of work to be performed in conformance with this specification and construction details thereof are:

a. Subsidiary Item, Reinforcing Steel

1. This item will consist of furnishing and installing all steel reinforcement required in the concrete as shown on the drawings or as called for in these specifications.

2. Reinforcing steel will be ASTM GA-615. Grade 60-S, A305 deformations. All rebar will be epoxy coated.

3. All horizontal steel mats will be supported in place by metal chairs or concrete blocks and chairs will be used for spacing of reinforcing steel.

4. All splicing of bars, concrete cover, placing tolerances and bar spacing's will conform to "Building Code Requirements for Reinforced Concrete" (ACI 350), as published by the American Concrete Institute, and to recommended practices in "Reinforcement Anchorages and Splices" by the concrete Reinforcing Steel Institute.

5. There will be no separate payment for Reinforced Steel. Compensation will be made in the Bid Item requiring reinforcing steel.

CONSTRUCTION SPECIFICATION

61. LOOSE ROCK RIP RAP

1. SCOPE

The work will consist of the construction of loose rock riprap revetments and blankets, including filter layers or bedding where specified.

2. MATERIALS

Rock for loose rock riprap will be obtained from designated sources.

Rock from designated sources will be excavated, selected and handled as necessary to meet the quality and grading requirements in Section 8 of this specification. The rock will conform to the specified grading limits when installed in the rip rap.

Filter material will conform to the requirements of this specification.

Bedding will be obtained from the designated sources and will be selected to meet the quality and grading requirements in Section 8 of this specification.

At least 30 days prior to delivery of material from other than designated sources, the Contractor will notify the Contracting Officer in writing of the sources from which he intends to obtain the material. The Contract will provide the Engineer free access to the sources for the purpose of obtaining samples for testing.

2. SUBGRADE PREPARATION

The subgrade surfaces on which the riprap or bedding course is to be placed will be cut of filled and graded to the lines and grades shown on the drawings. When fill to subgrade lines is required, it will consist of approved materials and will conform to the requirements of the specified class of fill.

Riprap will not be placed until the foundation preparation is completed and the subgrade surfaces have been inspected and approved by the Engineer.

3. EQUIPMENT-PLACED ROCK RIPRAP

The rock will be placed by equipment on the surfaces and to the depths specified. The riprap will be constructed to the full course thickness in one operation and in such a manner as to avoid serious displacement of the underlying materials. The rock will be delivered and placed in a manner that will insure that the riprap in place will be reasonably homogeneous with the larger rocks uniformly distributed and firmly in

contact one to another with the smaller rocks and spalls filling the voids between the larger rocks.

Riprap will be placed in a manner to prevent damage to structures. Hand placing will be required to the extent necessary to prevent damage to the permanent works.

5. HAND-PLACED RIPRAP

The rock will be placed by hand on the surfaces and to the depths specified. It will be securely bedded with the larger rocks firmly in contact one to another. Spaces between the larger rocks will be filled with smaller rocks and spalls. Smaller rocks will not be grouped as a substitute for larger rock. Flat slab rock will be laid on edge.

6. FILTER LAYERS OF BEDDING

When the drawings specify filter layers or bedding beneath riprap the filter or bedding material will be spread uniformly on the prepared subgrade surfaces to the depth specified. Compaction of filter layers or bedding will not be required, but the surface of such layers will be finished reasonably free of mounds, dips or windrows.

7. TESTING

The Engineer will perform such tests as are required to verify that the riprap, filter, and bedding materials and the completed work meet the requirements of the specifications. These tests are not intended to provide the Contractor with the information he needs to assure that the materials and workmanship meet the requirements of the specifications, and their performance will not relieve the Contractor of the responsibility of performing his own tests for that purpose.

8. MEASUREMENT AND PAYMENT

(Method 1) For items of work for which specific unit prices are established in the contract, the volume of each type of riprap, including filter layers and bedding, will be measured within the specified limits and computed to the nearest cubic yard by the method of average cross-sectional end areas. Payment for each type of riprap, including filter layers and bedding, will be made at the contract unit price for that type of riprap. Such payment will be considered full compensation for all labor, materials, equipment and all other items necessary and incidental to the completion of the riprap, filter layers and bedding.

(Method 2) For items of work for which specific unit prices are established in the contract, the volume of each type of riprap and the volume of each type of filter layer or bedding will be measured within the specified limits and computed to the nearest cubic yard by the method of average cross-sectional end areas. Payments for each type of

riprap will be made at the contract unit price for that type of riprap. Payment for each type of filter or bedding will be made at the contract unit price for that type of filter or bedding. Such payment will be considered full compensation for all labor, materials, equipment and all other items necessary and incidental to the completion of the riprap, filter layers and bedding.

(Method 3) For items of work for which specific unit prices are established in the contract, the quantity of each type of riprap placed within the specified limits will be measured to the nearest ton by actual weight, and the volume of each type of filter layer or bedding will be measured within the specified limits and computed to the nearest cubic yard by the method of average cross-sectional end areas. For each load of rock placed as specified, the Contractor will furnish to the Engineer a statement-of-delivery ticket showing the weight, to the nearest 0.1 ton, of rock in the load.

Payment for each type of riprap will be made at the contract unit price for that type of riprap. Payment for each type of filter or bedding will be made at the contract unit price for that type of filter or bedding. Such payment will be considered full compensation for all labor, materials, equipment and all other items necessary and incidental to the completion of the riprap, filter layers and bedding.

(Method 4) For items of work for which specific unit prices are established in the contract, the quality of each type of riprap placed within the specified limits will be measured to the nearest ton by actual weight, and the volume of each type of filter material or bedding delivered and placed within the specified limits will be measured to the nearest cubic yard by measured by measurement of the hauling equipment. For each load of material placed as specified, the Contractor will furnish to the Engineer a statement-of-delivery ticket showing the weight, to the nearest 0.1 ton, of rock in the load; or the volume, to the nearest 0.1 cubic yard, of filter material or bedding in the load.

Payment for each type of riprap will be made at the contract unit price for that type of riprap. Payment for each type of filter or bedding will be made at the contract unit price for that type of filter or bedding. Such payment will be considered full compensation for all labor, materials, equipment and all other items necessary and incidental to the completion of the riprap, filter layers and bedding.

(Use with All Methods) Compensation for any item of work described in the contract but not listed in the bid schedule will be included in the payment for the item of work to which it is made subsidiary. Such items and the items to which they are made subsidiary are identified in Section 9 of this specification.

9. ITEMS OF WORK AND CONSTRUCTION DETAILS

Items of work to be performed in conformance with this specification and the

construction details are:

a. Bid Item 8, Rock Riprap

1. This item will consist of transporting, testing of the rock, grading and sizing, and placing the rock riprap as shown on the construction drawings. The specifications of the rock testing will be included in the Specials.

2. The rock riprap will be durable, angular field or quarry stone, free of seams, abrasions, cracks and other structural defects.

3. Material source for rock riprap will be supplied by the Owner on site and at the locations shown on the drawings in Meeting House Canyon. An alternative source of rock is on PacifiCorp property located adjacent to and around the Huntington Power Plant. All surface rock located on XTO gas line right-of-way must be removed under the guidelines of XTO, excavating for rock on the right-of-way will not be allowed.

4. Rock riprap layer will be at least 24-36 inches thick, or as shown on the drawings, with a D50 = 24 inch.

5. Gradation of the material will be according following table.

D100	37-49”
D85	32-44”
D50	24-37”
D10	20-32”

6. The surface will be graded uniform prior to the placement of the Geotextile fabric. The riprap will then be placed on the fabric to form a uniform and stable surface using rocks of graded sizes. The fabric will be subsidiary to this bid item and will not be paid for separately.

7. The Geotextile fabric will be non-woven, with material meeting the Specification AASHTO M-288. The weight of material will be at least 11 oz/SY.

8. Measurement will be by Method 1.

9. Payment will be made at the contract unit price. Such payment will constitute full and complete compensation for labor, materials, equipment, along with all other items necessary or incidental to completion of the work.

b. Bid Item 9, Rock

1. This item will consist of placing the rock and Geotextile fabric as shown on the construction drawings.

2. The rock will be durable, angular field or quarry stone free of seams cracks or other structural defects.

3. The rock will be delivered to the project site at the stock pile locations shown on the drawings.

4. Gradation of the material will have a D50=30 inch rock and will be according to the following table.

D100	42-52”
D85	32-44”
D50	30-42”
D15	24-32”

5. The surface will be graded uniform prior to the placement of the Geotextile fabric. The rock will then be placed on the fabric to form a uniform and stable surface using rocks of graded sizes. The fabric will be subsidiary to this bid item and will not be paid for separately.

6. The Geotextile fabric will be non-woven, with material meeting the Specification AASHTO M-288 Class 1. The weight of material will be at least 11oz/SY.

7. Measurement and payment will be to the neat line of the excavation and finish grade as shown on the drawings. Payment will be made at the contract unit price. Such payment will constitute full and complete compensation for labor, materials, equipment, along with all other items necessary or incidental to completion of the work.

CONSTRUCTION SPECIFICATION

62. GROUTED RIPRAP

1. SCOPE

The work will consist of the construction of grouted rip rap and blankets, including filter layers or bedding where specified.

2. MATERIALS

A. Submit in writing the following at the preconstruction conference:
   1. The source for riprap, and gradation.
   2. Grout mix-design.
   3. Samples for quality assurance testing before use.

Quality Assurance:

A. Grouted Riprap Sample Panel
   1. Construct a 4 ft long x 4 ft wide x 2 ft thick sample panel. Integrate the sample panel in the project quantity. Retain samples of cements, sands, aggregates, and additives used in this sample for comparison with materials used in the project. For small quantities less than 20 square feet, reduce or revise sample panel size according to the resident engineer directions.
   2. Use the accepted 4 ft x 4 ft x 1½ ft sample panel as a standard to judge consistent visual appearance, acceptable workmanship, joint treatment, curing, cleaning and construction techniques to be used through out the project.
   3. Remove sample panel upon completion and acceptance of riprap installation.

B. Riprap Source
   1. Set up riprap source location inspection meeting with the Engineer and source material owner prior to delivering materials to project site.
   2. Identify stock piling procedure.
   3. Provide written certification verifying the quality of riprap existing at the industrial source. Certify that “reactive” stone are not found in the quarry pit. Alkali-silica and alkali-carbon reactions are the most frequent of these reactions. Perform a petrographic analysis on representative aggregate samples to determine whether reactive stones are present in the absence of a documented 10-year history of use of quarry aggregates in commercial concrete mix designs.

4. Provide historic results on reactivity of the rock or petrographic analysis of the proposed materials for rip rap.

C. Preconstruction Conference
1. Provide
a. Proposed source sites
b. Material test results
c. Grout mix design
d. Quality control plan

Delivery, Storage and Handling:

A. Deliver and stock pile enough stone onsite for project.

B. Prevent contamination of the stone surfaces with clays or similar materials.

C. Remove any stone that does not conform to this specification.
1. The Engineer may reject any stones not conforming to this specification.

3. RIPRAP ELEMENTS

A. Stone quality
1. Use angular stones that are sound and durable against disintegration, and that have their greatest dimensions no greater than three times their least dimensions.

B. Meet the following tests minimum requirements for stone. The specifications are included in the Specials.
1. Maximum wear not greater than 40 percent when tested according to ASTM C 535.
2. Minimum specific gravity of 2.5 when tested according to ASTM C 127.
3. Weighted loss not greater than 10 percent when tested according to AASHTO T 104.

C. Stone gradation
1. Provide stones for grouted riprap of 1½ to 2 feet thick that meet the gradation requirements detailed in Table 1.

Table 1

D100	28-30”
D85	22-28”
D50	18-24”
D10	12-18”

D. Use gradations that allow full grout penetration around the rocks.

4. GROUT

A. The Contractor shall provide grout that meets the following requirements.
   1. Regular concrete mix having a minimum 28-day compressive strength of 4000 psi, conform to strength testing requirements of Specification 32.
   2. Minimum air content of 5 percent.
   3. Use the approved mix design as submitted by the contractor.
   4. Use a minimum of six sacks of Type V portland cement per cubic yard of grout.
   5. Contractor shall submit a grout mix design at least 2 weeks prior to placement that readily flows into the open spaces between the stones with the riprap gradation used. 6-inch to 10-inch slump permitted.
   6. Add 1.5 pounds of fibermesh or equivalent per cubic yard of grout.
   7. Do not use calcium chloride admixtures.

ACCESSORIES

A. Portland cement: Use portland cement conforming to Specification 32.

B. Pozzolan:
   1. Use Pozzolans conforming to Section 03055 and specification ASTM C 618. Class F, in amounts not to exceed 25 percent, based on absolute volume.
   2. Use an equivalent amount of portland cement in the grout mixture as a substitute.

C. Aggregates: Conform to the requirements of Specification 32.

D. Water: Use water that conforms to requirement of Specification 32.

E. Air-entraining admixtures: Refer to Specification 32.

F. Other admixtures: Refer to Specification 32.

G. Use products to clean rock surfaces that are known to be compatible with cementitious grouts. Use in accordance with manufacturer's instructions.

PREPARATION

A. Install surface and ground water control measures as needed to perform work in dry conditions. Water control measures include, but are not limited to diversions,

culverts, sumps with pumps or other means necessary to maintain the level of groundwater below subgrade elevation and to divert surface water away from the work area.

B. Remove all topsoil, loose excavated materials, trees, timber debris, soft yielding material and concrete debris, and other objectionable materials from beneath the areas where the grouted riprap is to be placed and as shown on the plans. Do not block natural drainage layers or horizons within the channel bottom.

C. Place any approved on-site material and compact as specified to the designated subgrade elevation.
   1. Do not backfill depression with shattered shale materials.
   2. Spread fill materials uniformly minimizing segregation.
   3. Compact subgrade to 95 percent maximum density, AASHTO T 99, or to a 70 percent relative maximum density, AASHTO T 180.
   4. Smooth graded areas maintaining specified slope with no more than 3 inches change unless closer tolerances are specified.

PLACEMENT OF RIPRAP ELEMENTS

A. Install the riprap in place of the specified depth.
   1. Distribute larger stones uniformly.
   2. Do not group stones as a substitute for larger stone.
   3. Arrange individual stones as necessary by use of equipment or grapple device or hand in order to maintain the specified gradation and interlock.

B. Provide adequate access when placing stones in the grout to lower portions of the stone to prevent voids from forming.
   1. Place stones to secure a stone mass with the minimum thickness and height indicated.

C. Provide a riprap surface conforming to the lines and grades and adjacent channel surfaces as shown on the plans.
   1. Manipulate the stone if necessary to secure a regular surface of graded size and mass stability.
   2. Remove any stones projecting above the finished design grade more than 10 percent of the stone layer thickness.
   3. Make smooth transition without cutting or breaking stones.

D. Do not crush the weep drains extending into the underlying granular drain material.
   1. Select drain pipe materials that are compatible with the chosen method of riprap placement.

E. Place all stones in a dry condition beginning at the toe of the slope or other lowest point.
   1. Provide weep holes of 3 inch diameter pipe penetrating the bedding with an average spacing not to exceed 10 feet on center at the toes of slopes.

F. Form all outer edges and the top of grouted riprap where construction terminates so that the surface of the work is embedded and even with adjacent slope or ground.

RIPRAP GROUTING

A. Do not place grout mix when the daily minimum temperature is less than 40 degrees F.
   1. Maintain at minimum temperature of 50 degrees F and not more than 90 degrees F during the placement and the curing periods.

B. Do not place on frozen surfaces.
   1. Cover the grouted stone and heat within a range of 50 and 90 degrees F for a minimum of 24 hours prior to placing grouting materials when temperature is below 40 degrees F and dropping.

C. Thoroughly wet riprap, bedrock, and foundation surfaces.
   1. Allow excess water to drain.
   2. Achieve a dry saturated surface condition.

D. Use low pressure to inject grout into the voids between stones by pumping through a maximum 2-inch diameter hose.
   1. Stop the flow at any time.

E. Deposit grout to fill all voids as stones are placed.
   1. Secure maximum compaction and density of the grout.

F. Place the grout from bottom to top and use sufficient grout to fill all voids between the stones.
   1. Fill all voids with grout from the subgrade level through the stone layer.
   2. Grout must penetrate to subgrade.
   3. Use a “pencil” vibrator fill all voids between and under stones.

G. Leave grout joints recessed below the surface of the adjacent stones.
   1. Leave the top surface of the stones fully exposed.
   2. Immediately remove all excess grout with a stiff brush augmented with a cleaning agent if needed.

H. Do not use grout to cover the surface of the stone.
   1. Construct the grouted riprap having a rustic appearance.
   2. Match the workmanship of the sample panel.

I. Do not clog the weep drainpipes or clog the filter drain materials.

J. Do not re-temper grout mix by adding water in field.

CURING AND PROTECTION

A. Keep exposed surfaces continuously moist for the seven-day curing period.

B. Maintain moisture by sprinkling, fog spraying, or by covering with continuously moistened canvas, cloth mats, straw, sand or similar material.

1. Protect the grout during the curing process without causing damage to the grout surface by erosion or other mechanisms during water or moist covering.

5. ITEMS OF WORK AND CONSTRUCTION DETAILS

Items of work to be performed in conformance with this specification and the construction details are:

a. Bid Item 10, Grouted Rock Rip Rap

1. This item will consist of furnishing, transporting, placing the grouted riprap, and grouting as shown on the drawings, including labor, equipment and materials.

2. The rock riprap will be durable, angular field or quarry stone, free of seams, abrasions, cracks and other structural defects.

3. Material source for rock riprap will be supplied by the Owner on site and at the locations shown on the drawings in Meeting House Canyon. An alternative source of rock is on PacifiCorp property located adjacent to and around the Huntington Power Plant and directed by plant officials. All surface rock located on XTO gas line right-of-way must be removed under the guidelines of XTO, excavating for rock on the right-of-way will not be allowed.

4. Grout used in the rock riprap will be as specified in Section 4 of these specifications.

5. Grout will be consolidated with a vibrator between rocks. At least 15% to 20% of the rock will show above the grout. Grout will require a broom finish.

6. The rock used for the grouted riprap will have a D50=18 inches and will be according to the following table.

D100	28-30”
D85	22-28”
D50	18-24”
D10	12-18”

7. Measurement will be by the Cubic Yard.

8. Payment will be at the contract unit price for the bid item. Such payment will constitute full compensation for all labor, materials, equipment, transportation, tools, excavation, compacted fill, untreated base course, and all other items necessary or incidental to the completion of the work.

CONSTRUCTION SPECIFICATION

91. FENCING AND GATES

1. **SCOPE**

   a. The contractor shall furnish and install the chain link and wire fence and gates shown on the drawings and specified herein. Temporary fencing required, but not shown on the drawings, shall be as specified elsewhere.

   b. The drawings show the location of the fences, but the Owner's Representative will establish and stake the exact line of these fences. The Contractor shall provide offset stakes as required for his use during construction.

   c. Shop and installation drawings for the fences and gates shall be submitted in accordance with the requirements of the section on shop drawing submittal in the general provisions.

   d. All ferrous materials shall be galvanized as hereinafter specified. Defective galvanized material or material upon which abrasion of the galvanizing has occurred shall not be used.

   e. The Contractor shall furnish padlocks for the gates.

   f. All earth, trees, brush, and other obstructions which interfere with the proper construction of fences shall be removed and disposed of, unless the Owner's Representative orders certain trees and brush to remain in place.

2. **FENCING ALTERATIONS**

   a. The Contractor shall perform all fence removals, salvaging, maintaining and reinstallation of existing fencing, and other fencing alterations as shown on the drawings and specified.

   b. Where existing fencing is required to be removed to permit pipelaying or other work to pass through, only that portion of the fence which would interfere with the progress of the pipelaying shall be removed. Sharp projecting ends of wire shall be knuckled to avoid hazard of cutting or sticking persons or animals contacting the cut fencing. Promptly after the pipelaying has passed through the fencing, the opening shall be closed and the fencing shall be repaired. Cutting of existing fencing shall be performed in a manner that will facilitate repair of the cut opening. All fence repairs shall be neat and securely fastened in place.

c. Fencing required to be maintained during construction shall not be cut or removed for construction purposes, but shall be protected and maintained as an effective barrier to prevent the escape of livestock and the intrusion of unauthorized persons.

d. Fencing, gates, and metal posts required to be salvaged shall be carefully demounted. The demounted fencing shall be rolled into separate bundles not more than 30 inches in diameter and tied to prevent unrolling. All posts and fittings shall be salvaged to the maximum practicable extent. Steel drive posts and posts with concrete footings shall be pulled up and cleaned of dirt and concrete shall be removed. All posts shall be wire tied in bundles weighing not more than 100 pounds. Damaged or kinked fencing shall be disposed of by the Contractor. Salvaged fencing required to be reinstalled shall be stockpiled at the work site. Such stockpiled fencing shall be placed on wood runners or other raised surfaces. The locations of fencing storage shall be as directed by the Owner's Representative.

e. Promptly after being notified by the Owner's Representative, salvaged fencing shall be reinstalled at the locations shown on the drawings. Where required to complete the line of fencing, salvaged fencing shall be supplemented with new fencing. New fencing shall be furnished by the contractor and shall match the existing salvaged fencing as closely as practicable. Salvaged fencing shall be fitted with new posts and fittings where required to produce a complete and workmanlike installation.

3. **CHAIN LINK FENCING**

a. General

The chain link fencing shall be constructed with capped posts and top and bottom tension wires. Top rails will not be required except where replacing or matching an existing fence with a top rail.

b. Materials

1. Posts and Braces

a. Steel pipe used for posts and braces shall conform to the applicable requirements of ASTM A 120; other steel sections used for posts and braces shall be good commercial quality weldable steel. All fence posts shall be one piece without circumferential welds.

b. Posts and braces shall conform to the dimensions and weights shown in Table 206-6.2 of the 1976 edition of SSPWC, unless otherwise shown on the plans or required by permits.

c. All posts shall be fitted with tops designed to fit securely over the posts and carry the top tension wire, except that the top of H-section and U-section posts may be open slotted in such a manner as to securely hold the top tension wire in position without vertical movement. Such slotting shall allow removal and replacement of a post without disturbing the top tension wire. Where slotted posts are used, the required slotting shall be performed prior to galvanizing. Tubular posts shall be fitted with watertight tops.

d. Changes in the fence line where the horizontal angle is 15 degrees or more shall be considered as corners and corner posts shall be installed. Changes in the grade where the vertical angle exceeds 5% shall have slope posts installed at the point of change.

e. Posts and braces shall be galvanized in accordance with the applicable requirements of ASTM A123.

f. Post tops, extension arms, stretcher bars, and other fittings and hardware shall be steel, malleable iron, or wrought iron and shall be galvanized in accordance with the applicable requirements of ASTM A513.

2. Fabric

Chain link fence fabric shall conform to the applicable requirements of ASTM A392, Class I. The wire used in the manufacture of the fabric shall be not lighter than 9 gauge, woven into a 2-inch mesh. The chain link fence fabric shall have a twisted and barbed finish on the top and bottom edges, unless otherwise noted.

3. Barbed Wire

The barbed wire for the three strands to be installed on the extension arms at the top of the fence and gates shall conform to the applicable requirements of ASTM A121, Class 2. The barbed wire shall consist of two strands of 12 2 gauge wire, twisted with 4 point, 14 gauge barbs spaced not more than 5 inches apart.

4. Tension Wire

Between posts, the chain link fabric shall be fastened to a top and bottom tension wire of not lighter than 7 gauge galvanized, coil spring steel of good commercial quality.

5. Tie Wire

Tie wire shall be not lighter than 9 gauge galvanized steel wire. The use of approved galvanized steel bands will be permitted in lieu of tie wires for fastening the chain link fabric to the posts and gate frames.

6. Tubular-Steel Frame Gate

a. Gate frames for chain link fencing shall be constructed of 1 inch diameter pipe gate frames.

b. Place pie braces vertically in each drive gate to provide uniform size panels.
   1. 10 ft and 12 ft gates much have 1 vertical support.
   2. 14 ft and 16 ft. gates much have 2 vertical supports.

c. Dimension shown on the plans and in the specifications are the minimum clear openings between gate posts. Provide an adjustable truss rod of 3.8 inch minimum diameter to prevent sagging on gates 10 ft or more in length. The supplier must provide a gate with fittings to fill the opening.

d. Supply hot-dipped galvanized steel fittings as specified. AASHTO M232. Pintles for 10 ft and wider gates must be 5/8 inches in diameter or larger. Frame and walk gates must be made of 1 inch galvanized steel tubing. Fastener and single gates must be an 18 inch length of galvanized chain secured to the gate at one end and fitted with a snap fastener on the loose end. All double drive gates must have a center latch in place of a chain fastener a pin from the latch must fit in a socket embedded in concrete.

e. install end-braced posts in existing cross fences when intersected by the new right-of-way fence

7. Construction

Line posts shall be spaced at not more than ten foot intervals, measured from center to center of the posts. In determining the post spacing, measurement shall be made parallel to the slope of the natural ground, and all posts shall be placed in a vertical position.

8. Concrete for Footings

a. All fence posts in earth shall be set in footings of 4-1/2-sack concrete

conforming to the applicable requirements of the section on concrete construction.

b. Concrete for footings shall be placed immediately after mixing. The method of placing the concrete shall be such that there will be no concentration of the large aggregates. The concrete shall be consolidated and compacted by tamping or vibrating in an approved manner.

c. Concrete for footings may be placed without forms providing the ground is firm enough, in the opinion of the Owner's Representative, to permit excavation to the neat line dimensions shown on the drawings. Prior to placing the concrete, the earth around the hole shall be moistened. The concrete shall completely fill the hole and shall be crowned and smooth at the top.

d. Where the ground cannot be satisfactorily be excavated to neat line dimensions, forms shall be used for the footings. The forms shall be of material adequate to contain the concrete through final set. The forms and the bottom of the hole shall be moistened before the concrete is placed. As soon as the concrete has set sufficiently to maintain its shape, but no sooner than 24 hours after placing, the forms shall be removed and the footing excavation shall be backfilled with soil and solidly tamped.

e. Not less than seven days shall elapse after placing the concrete footings before the fence fabric is fastened to the posts.

9. Erection of Fence

a. End, corner, and gate posts shall be braced to the nearest line post with galvanized diagonal or horizontal braces used as compression members and galvanized 3/8 inch steel truss rods with turnbuckles used as tension members.

b. The chain link fabric shall be fastened on the side of the posts as directed by the Owner's Representative.

c. The fabric shall be stretched and securely fastened to the posts, and between posts, the top and bottom edges of the fabric shall be fastened to the tension wires. The tension wires shall be stretched tight with turnbuckles at the end and corner posts. The bottom tension wire shall be installed on a straight grade between posts.

d. The fabric shall be fastened to the end, corner, and gate posts with 1/4 inch by 3/4 inch stretcher bars and not smaller than 1/8 inch by 3/4 inch stretcher bar bands spaced on one foot intervals. The fabric shall be fastened to the line posts and tension wires with tie wires or metal bands. The wire or band fasteners shall be spaced a approximately 14 inches on line posts and at approximately 18 inches on tension wire.

4. **BARBED AND NET WIRE FENCING**

a. Materials

1. Posts

a. Cedar posts for the wire fence shall be 8-foot long, with 4-inch minimum top diameter and 8-inch minimum butt diameter and tip diameter shall be 4" after trimming. Fencing details are contained in the drawings.

b. Changes in the line where the angle of deflection is 10 degrees or more shall be considered as corners, and corner posts shall be installed.

2. Barbed Wire

a. General

Barbed wire shall conform to that specified in the section on chain link fencing.

b. Gates

Gates shall conform to the requirements of the section on chain link fencing; except frames shall be not smaller than 1 1/4 inches and the truss braces shall be inch. Gate frames may be constructed with bent frames as shown on the drawings, welded, or with malleable iron fittings designed for that purpose.

c. Construction

The barbed wire fence shall be constructed in accordance with the section on chain link fencing and as shown on the drawings.

5. **MEASUREMENT AND PAYMENT**

Measurement of fencing will be made to the nearest linear foot. Payment will be made at the contract unit price for fence installed according to plans and specifications which shall constitute full compensation for all labor, materials, and equipment required for completion of the work including gates, latches, locks and etc.

6. ITEMS OF WORK AND CONSTRUCTION DETAILS

Items of work to be performed in conformance with this specification and the construction details thereof are:

a. Bid Item 11, Field Fence

1. This item will consist of furnishing, transporting, and installing the fence and t- posts as shown on the drawings.

2. Fencing will be constructed as shown on the drawings.

3. Existing fence shall be removed and disposed of by the Contractor. Contractor will give the Landowner the opportunity to salvage their existing fence. Contractor will be responsible to dispose of the existing fence if the Owner elects not to salvage fence. The removal of the existing fence will not be paid for separately but will be paid for a part of this bid item.

4. Wire mesh will be grade 60, nominal .099 inch farm grade wire mesh fencing with 6 inch vertical wire spacing and a Class 1 zinc coating.

5. Maximum spacing of the drill steel posts will be 40 feet.

6. Contract will supply 1 7/8 drill steel, 12 feet long as shown on the drawings. The posts will be subsidiary to this bid item and not paid for separately. The Contractor will be required to place three 12 foot T-post every 10 feet in between each drill steel post.

7. Placement of gates will be as shown on the drawings. The gates will be subsidiary to this bid item and will not be paid for separately.

8. Measurement will be by the linear foot of fence installed.

9. Payment will be at the contract unit price. Such payment will constitute full compensation for the work and materials required to furnish and install the fence, as shown on the drawing and detailed in this specification.

CONSTRUCTION SPECIFICATION

93. STEEL CASING

1. **SCOPE**

This specification covers installation of underground pipeline using auguring, jacking or tunneling methods to avoid interference with and damage to existing surface facilities such as railroads, roads, streets and canals. Casing shall be required on all installations.

2. **INSTALLATION**

The casing pipe shall be installed utilizing one of the following methods.

a. Auguring

The Contractor shall auger the casing pipe in place true to the lines and grades established on the plans. The casing pipe shall follow the auger as closely as possible. Casing diameter and wall thickness, and carrier pipe support shall be as specified in Section 5.

b. Tunneling or Jacking

Where specifically called for in the plans the Contractor shall tunnel or jack the carrier pipe into place. The casing pipe shall be installed such that the carrier pipe may be placed true to line and grade. The casing pipe shall be kept pushed as close to the working face as possible at all times. Casing diameter and wall thickness shall be as called for in the plans when the jacking method is used. The minimum diameter of casing using the tunneling method shall be 36-inches. The carrier pipe shall be supported using standard methods as called for in the plans or by encasement in sand as directed by the Engineer.

3. **RESPONSIBILITY FOR WORK**

All of the operations of the Contractor in constructing the portions of the work under canals, railroad tracks, streets, roads, etc. shall be subject to the approval of the appropriate canal, railroad, highway, or street department. The contractor shall enter any agreements with and shall furnish any and all indemnity and other bonds that may be required for the protection of the railroad, street, or highway against injury and interference with traffic and service by operations of the Contractor.

The Contractor shall provide services of watchman, flagmen, etc. as required by the interested Railroad Company, Street or Highway Department.

The Contractor shall secure permission from the interested irrigation company, railroad company, State, street or highway department before commencing on the portion of work

within the right of way and under the street, highway, tracks, or canal.

The Contractor shall be solely responsible for the safety and adequacy of his construction plans and methods and for any damage which may result from their failure. If the Contractor's methods appear to the Engineer to be inadequate to provide safety for workmen or traffic or to provide adequate quality of work, the Engineer will instruct the Contractor to increase his safety precautions and quality of work. These demands shall be met and will not relieve the Contractor of the responsibility of safety or quality of work described above.

4. MEASUREMENT AND PAYMENT

The quantity of casing shall be determined to the nearest foot measurement of the laid length along the invert of the pipe. Contractor shall be responsible for determining the appropriate size of casing required and incorporate the cost thereof in the cost per linear foot. Payment will constitute full compensation for furnishing, transporting, and installing the casing complete in place. Compensation for any work required by the contract but not listed in the bid schedule will be included in the payment for the item of work to which it is made subsidiary.

5. ITEMS OF WORK AND CONSTRUCTION DETAILS

Items of work to be performed in accordance with this specification and the construction details are:

a. Bid Item 12 , Split Steel Casing (for 8” Waterline)
as

1. These items shall consist of all materials, labor, excavation and backfill necessary for installation of split steel casing as shown on the drawings.

2. Split Steel Casing pipe will be required where the culinary waterline crosses the HDPE lined channel. The length and size of casing will be as shown on the drawings.

3. Casing shall be steel and conform to requirements of ASTM A53. The casing shall be steel with a minimum thickness .375 inch.

4. The Contractor will be required to strip the pipe under the channel as shown on the drawing and attach the split casing around the existing 8-inch waterline. The Contractor will take care not to damage the waterline. If the line is damaged during construction, the Contractor will repair the waterline at their own expense.

5. Measurement will be made by the linear foot of crossing completed.

6. Payment will be made at the contract unit price for each bid item. Such payment will constitute full compensation for furnishing and installing the casing and completing the crossing as shown on the drawings, including equipment, labor, excavation, backfill, and all other items necessary or incidental to the completion of the work.

CONSTRUCTION SPECIFICATION

96. RESTORATION AND CLEAN UP

1. **SCOPE**

The work shall consist of all work necessary to restore the onsite construction zone to its original condition. Contractor shall follow the mitigation plan and restore all areas off-site, as indicated on the drawings. The work also includes meeting the requirements of all right-of-way agreements both private and public.

2. **MATERIALS**

All materials used shall be new.

3. **CONSTRUCTION REQUIREMENTS**

The equipment requirements are to restore the entire area of disturbance. This includes but is not limited to the restoration of washes, fences, re-seeding, rock removal and placement, leveling, construction debris, and etc.

4. The Contractor will comply with the following seed mix recommendations:

SEED MIX:

Plant Materials Selection and Information										
Specie	**Species**	**Target Seeds/ ft^2 Dry**	**Percent of mix** (%)	**Seeding Rate** (PLS lbs/ac)	**Seeding Rate** (lbs/ac)	**Seeds/ linear ft of Row**	**Average Purity** (%)	**Average Germ.** (%)	**Cost of Seed/lb** ($B or P)	**Cost of Mix/ac** ($)
1	Wheatgrass, Slender	20	20%	1.95	2.55	7.8	90%	85%	$3.40	$8.67
2	Wheatgrass, Western	20	20%	2.25	4.41	11.5	85%	60%	$4.00	$17.65
3	Needle and thread	21	15%	1.35	1.76	6.1	90%	85%	$76.00	$134.12
4	Brome, Mountain	10	15%	1.58	2.06	3.0	90%	85%	$6.00	$12.35
5	Lewis Flax	26	10%	0.60	0.74	4.9	95%	85%	$6.00	$3.60
6	Western Yarrow	64	10%	0.10	0.11	10.2	98%	95%	$12.00	$1.21
7	Sweetvetch, Utah	10	5%	0.94	1.16	0.9	90%	90%	$120.00	$112.50
8	Bee Spiderflower	9	5%	2.29	2.46	0.7	98%	95%	$0.20	$0.49
DesiredSeed List:	12-16 inches	**Totals :**	**100%**	**11.0**	**15.2**	**45.2**	**Drill Spacing:**		12	#N/A
Broadcast:	Y	**Irrigated/Dry:**		Dry	**Soil Limitations:**		Sandy		**PLS/B:**	Bulk

5. **MEASUREMENT AND PAYMENT**

The work will not be measured. Payment for clean up will be made at the contract lump sum price. Such payment will constitute full compensation for all labor, materials, equipment and all other items necessary and incidental to the completion of the work including restoration of all improvements and property condition in accordance with these specifications.

6. **ITEMS OF WORK AND CONSTRUCTION DETAILS:**

Items of work to be performed in conformance with this specification and the construction details are:

a. Bid Item 13, Restoration

1. This item shall consist of restoring all on-site disturbed areas to their original condition.

2. Restoration will include backfilling the area to the original contour of the ground prior to excavation, unless otherwise directed by the drawings in these specifications.

3. The construction area will be clean of debris, trees, or other disturbed vegetation.

4. All disturbed areas will be reseeded in accordance with the seed mix in section 4.

5. Measurement and payment will be according to Section 4 of these specifications.

EMERY COUNTY
TRAIL MOUNTAIN EMERGENCY WATERSHED PROTECTION PROJECT

RILDA CANYON
NORTH EMERY SPRINGS
2019

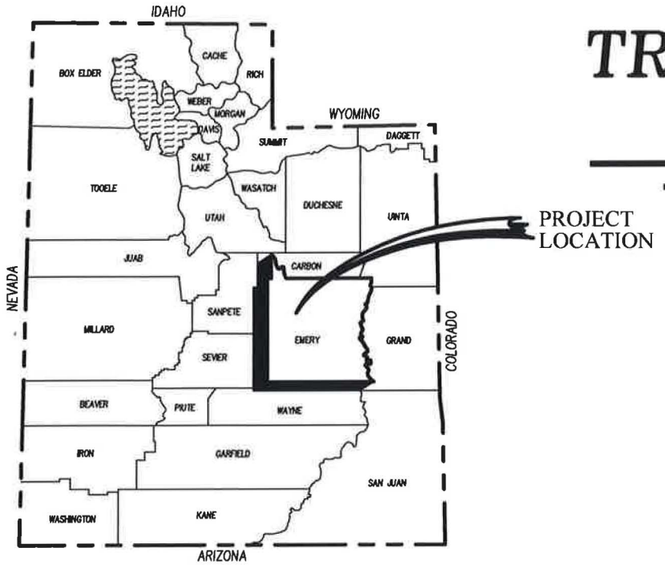

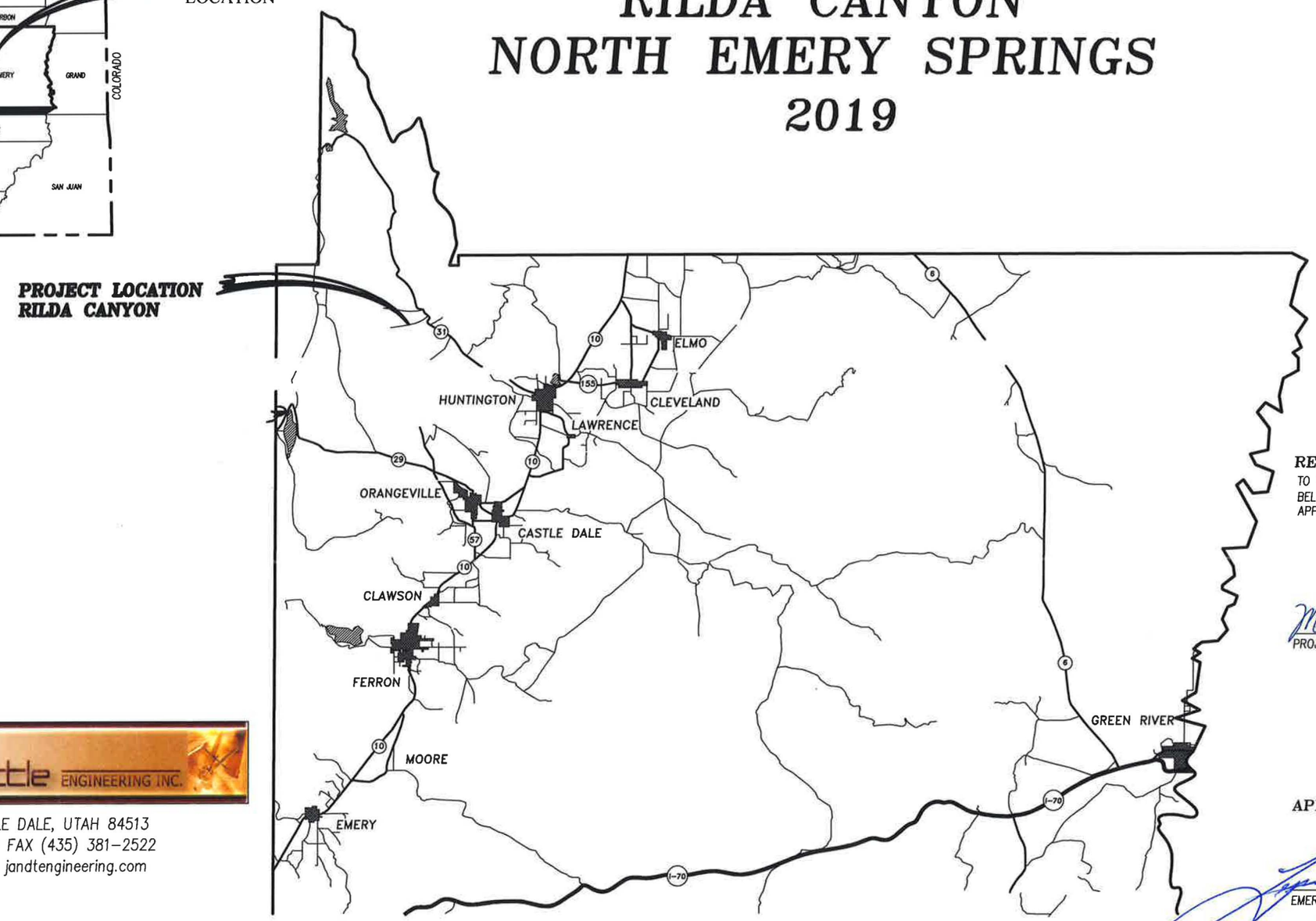

EMERY COUNTY

RECOMMENDED FOR APPROVAL:

TO THE BEST OF MY PROFESSIONAL KNOWLEDGE, JUDGMENT AND BELIEF, THESE PLANS (OR THIS REPORT, ETC). MEET THE APPLICABLE NRCS STANDARDS.

PROFESSIONAL ENGINEER 4939783 MERRIAL JOHANSEN STATE OF UTAH

Merrial Johansen 10/21/19

PROJECT ENGINEER DATE

APPROVALS:

10/22/19

EMERY COUNTY OFFICIAL DATE

johansen & tuttle ENGINEERING INC.

P.O. BOX 487, CASTLE DALE, UTAH 84513
Ph. (435) 381-2523 FAX (435) 381-2522
email jt @ etv.net, jandtengineering.com

T:\Projects 2018\Emery County Trail Mountain Emergency Protection\ENGR\DRAWINGS\Sheets\Rilda Canyon

INDEX TO SHEETS

SHEET	DESCRIPTION
1	TITLE SHEET
2	INDEX TO SHEETS AND SUMMARY OF ITEMS
3	GENERAL NOTES
4	BORROW AND DISPOSAL AREA LOCATION MAP
5	NORTH EMERY SPRINGS SITE PLAN
6	GROUTED ROCK RIP-RAP CHANNEL PLAN AND PROFILE SHEET
7	GROUTED ROCK RIP-RAP CHANNEL / ARMORED BY-PASS CHANNEL CROSS-SECTIONS
8	GROUTED ROCK RIP-RAP CHANNEL / ARMORED BY-PASS CHANNEL CROSS-SECTIONS
9	TRASH RACK STRUCTURE DETAIL SHEET
10	TRASH RACK REINFORCEMENT DETAIL SHEET
11	GROUTED CHANNEL TYPICAL SECTIONS
12	UPPER DROP STRUCTURE DETAIL SHEET
13	UPPER DROP STRUCTURE REINFORCEMENT DETAIL SHEET
14	LOWER DROP STRUCTURE DETAIL SHEET
15	LOWER DROP STRUCTURE REINFORCEMENT DETAIL SHEET
16	ARMORED BY-PASS CHANNEL PLAN AND PROFILE
17	ARMORED BY-PASS CHANNEL CROSS-SECTIONS
18	BY-PASS TYPICAL SECTIONS
19	BY-PASS WALL DETAILS
20	DIKE & RIP-RAP PLAN AND PROFILE SHEET
21	DIKE & RIP-RAP CROSS-SECTIONS
22	DIKE & RIP-RAP CROSS-SECTIONS
23	TYPICAL SECTIONS
24	CONCRETE DIP DETAIL
25	TYPICAL SECTIONS
26	TYPICAL REBAR LAYOUT DETAIL
27	ROCK GRADE STABILIZATION AND SHOULDER PROTECTION SITE PLAN
28	ROCK GRADE STABILIZATION "A" & "B" PLAN AND PROFILE
29	ROCK GRADE STABILIZATION "C" & "D" PLAN AND PROFILE
30	ROCK GRADE STABILIZATION "E" PLAN AND PROFILE
31	SHOULDER PROTECTION "A" PLAN AND PROFILE
32	SHOULDER PROTECTION "B" PLAN AND PROFILE
33	TYPICAL SECTIONS

SUMMARY OF ITEMS

ITEM	SECTION	DESCRIPTION	UNIT	QUANTITY
1	8	MOBILIZATION	LUMP	1
2	13	CLEARING AND GRUBBING	LUMP	1
3	16	GEOMEMBRANE LINER, 60MIL TEXTURED HDPE (DOUBLE SIDED TEXTURE)	SQ.FT.	21040
4	23	COMPACTED EMBANKMENT	C.Y.	5800
5	23	UNTREATED BASE COURSE (1-1/2 INCH MAX)	C.Y.	160
6	32	STRUCTURAL CONCRETE	C.Y.	1550
7	32	TRASH RACK STRUCTURE (INSTALLATION ONLY)	LUMP	1
8	61	ROCK RIP RAP	C.Y.	8,315
9	61	ROCK	C.Y.	3500
10	62	GROUTED ROCK RIP RAP	C.Y.	4515
11	91	FIELD FENCE	LIN.FT.	940
12	93	SPLIT STEEL CASING (FOR 8" WATER LINE)	LIN.FT.	85
13	96	RESTORATION	LUMP	1

* INFORMATION ONLY EXCAVATION 15900 C.Y.

DESIGNED	HRT	3-19	CHECKED MDJ 3-19
DRAWN	DMF	3-19	CHECKED MDJ 3-19
SURVEYED	BHT	3-19	CHECKED LMS 3-19
R.O.W.			CHECKED

PROJECT FILE
TRS\Trail Mountain EM\Emery County Trail Mountain Emergency Protection\ENGR\DRAWINGS\Sheets\Rilda

THIS DRAWING IS TO BE USED FOR THIS PROJECT AND THIS PROJECT ONLY UNLESS AUTHORIZED BY THE PROJECT ENGINEER AT JOHANSEN & TUTTLE ENGINEERS, INC.

REV.	DESCRIPTION	BY	DATE
1	CHANGED ROCK PER NRCS.	DMF	10-10-19

johansen & tuttle ENGINEERING INC.
P.O. BOX 487, CASTLE DALE, UTAH 84513 (435) 381-2523
FAX (435) 381-2522 email jt @ etv.net

TRAIL MOUNTAIN
EMERGENCY WATERSHED
PROTECTION PROJECT
RILDA CANYON NORTH
EMERY SPRINGS 2019

EMERY COUNTY

INDEX TO SHEETS
AND
SUMMARY OF ITEMS

SHEET NO.
2

GENERAL ENVIRONMENTAL NOTES:

1– CONSTRUCTION SHALL IMMEDIATELY BE SUSPENDED IN THE VICINITY (MINIMUM 100–FT BUFFER AROUND THE PERIMETER) OF THE DISCOVERY IF A SUSPECTED HISTORIC , ARCHAEOLOGICAL, OR PALEONTOLOGICAL ITEM, FEATURE, OR SITE IS ENCOUNTERED, OR IF SUSPECTED HUMAN REMAINS ARE ENCOUNTERED.

2– VERBALLY NOTIFY THE ENGINEER OF THE NATURE AND EXACT LOCATION OF THE FINDINGS.

3– PROTECT THE DISCOVERED OBJECTS OR FEATURES AND PROVIDE WRITTEN CONFIRMATION OF THE DISCOVERY TO THE ENGINEER WITHIN TWO CALENDAR DAYS.

4– ENGINEER SHALL PROVIDE WRITTEN CONFIRMATION WHEN WORK MAY RESUME IN THE AREA.

GENERAL NOTES:

1– COMPACTED FILL REQUIREMENTS WILL BE 95% OF TEST PROCEDURE ASTM DESIGNATION D–698, METHOD D STANDARD PROCTOR. MOISTURE CONTENT SHALL BE WITHIN 2% OF OPTIMUM. NOT APPLICABLE FOR OVERSIZED FRACTION MATERIAL.

2– CONTRACTOR SHALL PROVIDE ALL DEWATERING EQUIPMENT NECESSARY TO KEEP EXCAVATIONS DRY AND SHALL PROVIDE SHORING, SHEETING, AND BRACING NECESSARY TO PROTECT THE WORKMEN.

3– ALL DEWATERING OPERATIONS SHALL BE ADEQUATE TO ASSURE THE INTEGRITY OF THE FINISHED PROJECT AND SHALL BE THE RESPONSIBILITY OF THE CONTRACTOR.

4– ANY AND ALL AREAS DISTURBED DURING CONSTRUCTION ACTIVITIES SHALL BE RESTORED TO A CONDITION EQUAL TO OR BETTER THAN EXISTING CONDITION PRIOR TO CONSTRUCTION.

5– 4" PERFORATED PVC DRAIN PIPE WITH 1% MIN SLOPE. SEE SHEET 4E FOR DETAIL AND 4C FOR PLAN VIEW CALLOUTS.

6– ALL DISTURBED AREAS SHALL BE RE–SEEDED AS DESCRIBED IN SPECIFICATION 96 'CLEAN UP AND RESTORATION'.

GENERAL STRUCTURAL NOTES:

1– 12" THICK MIN. LAYER 2" DRAIN ROCK UNDER ALL CONCRETE.

2– CEMENT SHALL BE TYPE V.

3– CONCRETE MIX SHALL CONTAIN AT LEAST 6 BAGS PER YARD AND ACHIEVE 4500 P.S.I IN 28 DAYS.

4– CONCRETE MIX SHALL BE PLACED AT A SLUMP OF LESS THAN 4–INCHES. AIR CONTENT SHALL BE 4.5 TO 7.5 PERCENT OF VOLUME.

5– CONCRETE SHALL BE PREVENTED FROM DRYING FOR A CURING PERIOD OF AT LEAST 7 DAYS AFTER IT IS PLACED. LOADING SHALL NOT OCCUR DURING THE CURING PERIOD.

6– REINFORCING STEEL SHALL BE GRADE 60 AND SHALL BE PLACED AS SHOWN ON THE DRAWING.

7– REINFORCEMENT STEEL SHALL BE DEFORMED BARS CONFORMING IN QUALITY TO THE REQUIREMENTS OF ASTM A–615, "SPECIFICATIONS FOR DEFORMED BILLET–STEEL BARS FOR CONCRETE REINFORCEMENT", GRADE 60.

8– ALL DETAILING, FABRICATION AND PLACING OF REINFORCING BARS, UNLESS OTHERWISE INDICATED, SHALL BE IN ACCORDANCE WITH ACI–315, "MANUAL OF STANDARD PRACTICE FOR DETAILING REINFORCED CONCRETE STRUCTURES", LATEST EDITION.

9– TOLERANCES IN PLACING REINFORCEMENT SHALL BE:

± 3/8 INCH FOR MEMBERS WITH D <= 8 INCHES
± 1/2 INCH FOR MEMBERS WITH D > 8 INCHES

10– CONTRACTION JOINTS WILL BE REQUIRED AT A MAXIMUM SPACING OF 30 FEET AND A EXPANSION JOINT AT 120 FEET.

11– ALL CONSTRUCTION JOINTS, SHALL BE ROUGH AND THOROUGHLY CLEANED FOR BOND. THIS INCLUDES CLEANING OF LAITANCE, BUT NOT TO THE EXTENT OF EXPOSED AGGREGATE.

12– CONSTRUCTION JOINTS CONSTRUCTED AS SHOWN ON THE PLANS. ALL SHALL HAVE A 9" FLATSTRIP WATERSTOP AND SEALANT GROOVE.

13– DOWELS, PIPE, WATERSTOPS AND OTHER INSTALLED MATERIALS AND ACCESSORIES SHALL BE HELD SECURELY IN POSITION WHILE CONCRETE IS BEING PLACED.

14– VERTICAL REINFORCEMENT FOR CONCRETE OR MASONRY SHALL BE SPLICED WITH DOWEL BARS OF THE SAME SIZE AND SPACING FROM THE FOUNDATION USING A STANDARD SPLICE LENGTH UNLESS INDICATED OTHERWISE.

15– ALL GROUT SHALL BE NON–SHRINK GROUT, UNLESS INDICATED OTHERWISE.

16– METAL CLIPS OR SUPPORTS SHALL NOT BE PLACED IN CONTACT WITH THE FORMS OR THE SUBGRADE. CONCRETE BLOCKS (OR DOBIES) SUPPORTING BARS ON SUBGRADE SHALL BE IN SUFFICIENT NUMBERS TO SUPPORT THE BARS WITHOUT SETTLEMENT, BUT IN NO CASE SHALL SUCH SUPPORT BE CONTINUOUS.

17– DOWELS SHALL BE WIRED OR OTHERWISE HELD IN POSITION. THEY SHALL NOT BE SHOVED INTO FRESHLY PLACED CONCRETE.

18– SEE TABLE ON SHEET 26 FOR ALL BAR HOOKS, EMBEDMENT LENGTHS AND LAP LENGTHS.

19– REINFORCING BARS AND ACCESSORIES SHALL NOT BE IN CONTACT WITH ANY PIPE, PIPE FLANGE OR METAL PARTS EMBEDDED IN CONCRETE, A MINIMUM OF 2 INCHES CLEARANCE SHALL BE PROVIDED AT ALL TIMES.

20– ALL ITEMS EMBEDDED IN CONCRETE SHALL BE SPACED ON CENTER AT LEAST 4 TIMES THEIR OUTSIDE DIMENSION. THE OUTSIDE DIMENSION SHALL NOT EXCEED ONE THIRD OF THE MEMBER THICKNESS.

21– UNLESS OTHERWISE SHOWN ON THE DRAWINGS CONCRETE COVER FOR REINFORCING BARS SHALL BE AS FOLLOWS:

FOR CONCRETE PLACED AGAINST EARTH----------3"

FOR SURFACES IN CONTACT WITH WATER OR WEATHER AND FORMED SURFACES IN CONTACT WITH EARTH----------2"

FOR CONCRETE NOT EXPOSED TO WEATHER, OR IN CONTACT WITH WATER OR EARTH----------1 1/2"

22– SLABS WITH SLOPING SURFACES SHALL HAVE THE INDICATED SLAB THICKNESS MAINTAINED AS THE MINIMUM. SLAB BOTTOMS MAY EITHER SLOPE WITH THE TOP SURFACE OR BE LEVEL. REINFORCING IN SLABS WITH SLOPING SURFACES SHALL BE PLACED AT THE REQUIRED CLEARANCE FROM THE SLAB SURFACES.

23– ALL REBAR SHALL BE EPOXY COATED.

24– VARIATION FROM THESE REQUIREMENTS WILL NOT BE THE RESPONSIBILITY OF THE ENGINEER.

DESIGNED	HRT	3–19	CHECKED	MDJ	3–19
DRAWN	DMF	3–19	CHECKED	MDJ	3–19
SURVEYED	BHT	3–19	CHECKED	LMS	3–19
R.O.W.			CHECKED		

PROJECT FILE: T:\Projects 2018\Emery County Trail Mountain Emergency Protection\Work\DRAWINGS\Sheets\Rilda

THIS DRAWING IS TO BE USED FOR THIS PROJECT AND THIS PROJECT ONLY UNLESS AUTHORIZED BY THE PROJECT ENGINEER AT JOHANSEN & TUTTLE ENGINEERS, INC.

REV.	DESCRIPTION	BY	DATE
1	CHANGED ROCK PER NRCS.	DMF	10–10–19

johansen & tuttle ENGINEERING INC.
P.O. BOX 487, CASTLE DALE, UTAH 84513 (435) 381–2523
FAX (435) 381–2522 email jt @ etv.net

TRAIL MOUNTAIN
EMERGENCY WATERSHED
PROTECTION PROJECT
RILDA CANYON NORTH
EMERY SPRINGS 2019

EMERY COUNTY

GENERAL NOTES

SHEET NO.
3

DESIGNED	HRT	3-19	CHECKED MDJ 3-19
DRAWN	DMF	3-19	CHECKED MDJ 3-19
SURVEYED	BHT	3-19	CHECKED LMS 3-19
R.O.W.			CHECKED

PROJECT FILE
2019 Trail Mountain Emergency Protection\ENGR\DRAWINGS\Sheets\Rilda

THIS DRAWING IS TO BE USED FOR THIS PROJECT AND THIS PROJECT ONLY UNLESS AUTHORIZED BY THE PROJECT ENGINEER AT JOHANSEN & TUTTLE ENGINEERS, INC.

REV.	DESCRIPTION	BY.	DATE

johansen & tuttle ENGINEERING INC.
P.O. BOX 487, CASTLE DALE, UTAH 84513 (435) 381-2523
FAX (435) 381-2522 email jt @ etv.net

TRAIL MOUNTAIN
EMERGENCY WATERSHED
PROTECTION PROJECT
RILDA CANYON NORTH
EMERY SPRINGS 2019

EMERY COUNTY

BORROW AND DISPOSAL AREA LOCATION MAP

SHEET NO.
4

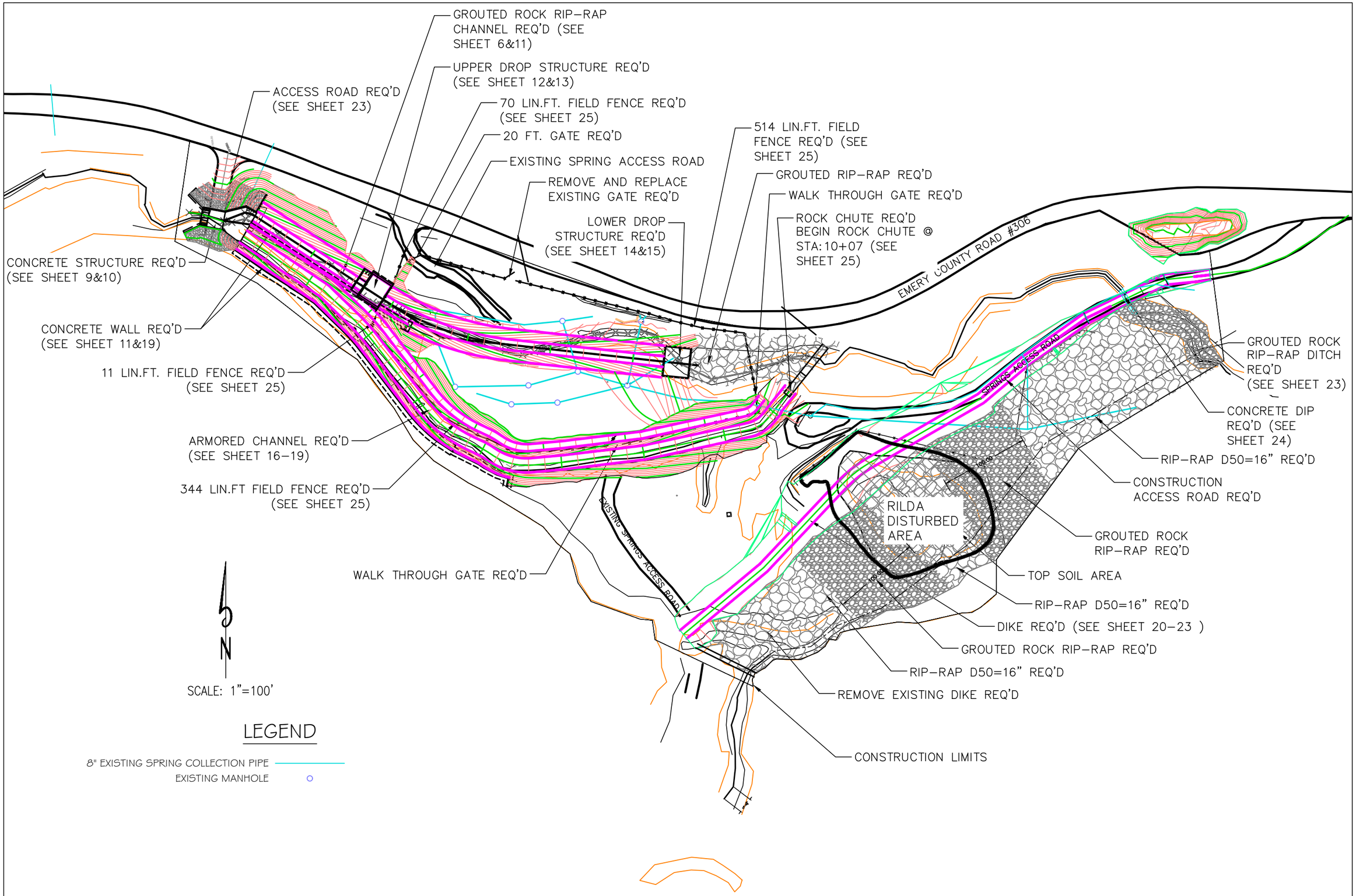

DESIGNED	HRT	3-19	CHECKED	MDJ 3-19
DRAWN	DMF	3-19	CHECKED	MDJ 3-19
SURVEYED	BHT	3-19	CHECKED	LMS 3-19
R.O.W.			CHECKED	

PROJECT FILE
TRAIL MOUNTAIN EMERGENCY PROTECTION\Emery County Trail Mountain Emergency Protection\ENGR\DRAWINGS\Sheets\Rilda

THIS DRAWING IS TO BE USED FOR THIS PROJECT AND THIS PROJECT ONLY UNLESS AUTHORIZED BY THE PROJECT ENGINEER AT JOHANSEN & TUTTLE ENGINEERS, INC.

REV.	DESCRIPTION	BY.	DATE

johansen & tuttle ENGINEERING INC.
P.O. BOX 487, CASTLE DALE, UTAH 84513 (435) 381-2523
FAX (435) 381-2522 email jt @ etv.net

TRAIL MOUNTAIN EMERGENCY WATERSHED PROTECTION PROJECT
RILDA CANYON NORTH
EMERY SPRINGS 2019

EMERY COUNTY

NORTH EMERY SPRINGS SITE PLAN

SHEET NO.
5

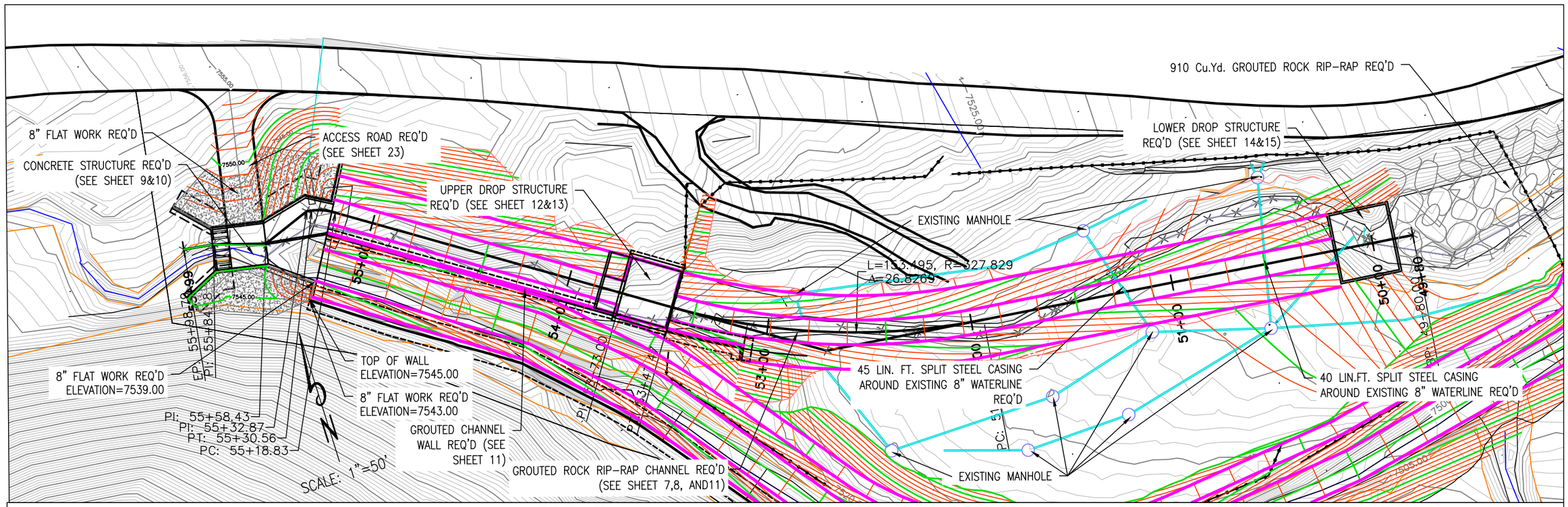

LEGEND

8" EXISTING SPRING COLLECTION PIPE

EXISTING MANHOLE

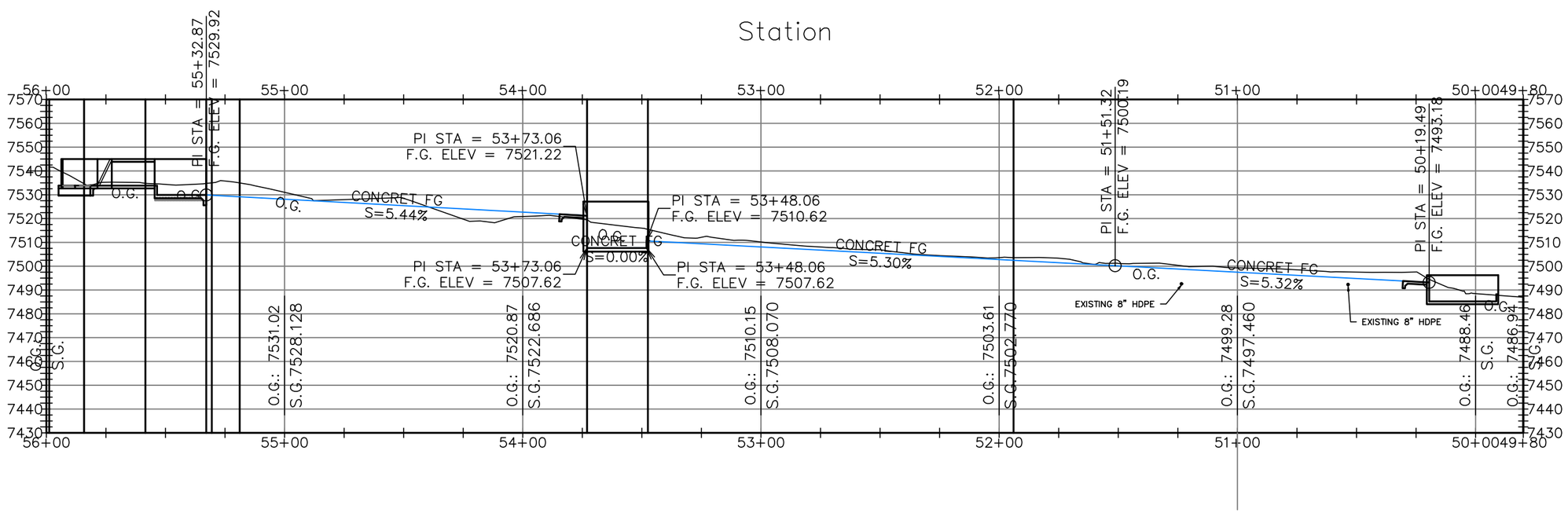

THIS DRAWING IS TO BE USED FOR THIS PROJECT AND THIS PROJECT ONLY UNLESS AUTHORIZED BY THE PROJECT ENGINEER AT JOHANSEN & TUTTLE ENGINEERS, INC.

DESIGNED	HRT	3-19	CHECKED MDJ 3-19
DRAWN	DMF	3-19	CHECKED MDJ 3-19
SURVEYED	BHT	3-19	CHECKED LMS 3-19
R.O.W.			CHECKED

PROJECT FILE: P:\Projects\EMS\Emery County Trail Mountain Emergency Protection\ENGR\DRAWINGS\Sheets\Rilda

REV.	DESCRIPTION	BY.	DATE
1.	CHANGED ROCK PER NRCS.	DMF	10-10-19

johansen & tuttle ENGINEERING INC.
P.O. BOX 487, CASTLE DALE, UTAH 84513 (435) 381-2523
FAX (435) 381-2522 email jt@etv.net

TRAIL MOUNTAIN EMERGENCY WATERSHED PROTECTION PROJECT
RILDA CANYON NORTH
EMERY SPRINGS 2019

EMERY COUNTY

GROUTED ROCK RIP-RAP CHANNEL PLAN AND PROFILE SHEET

SHEET NO.
6

55+50.00

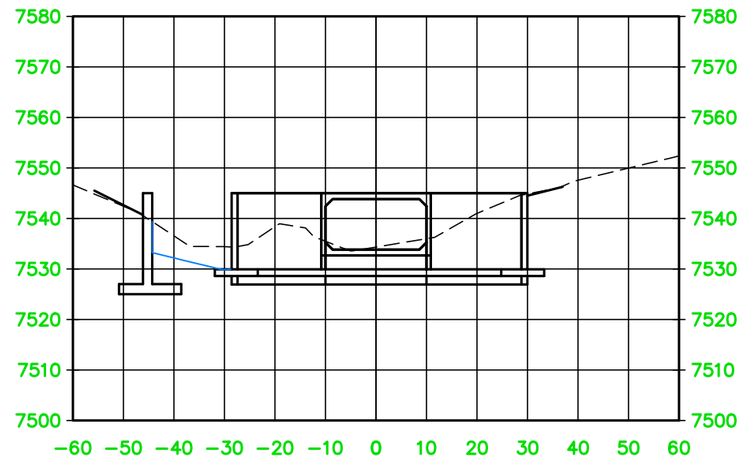

55+20.00

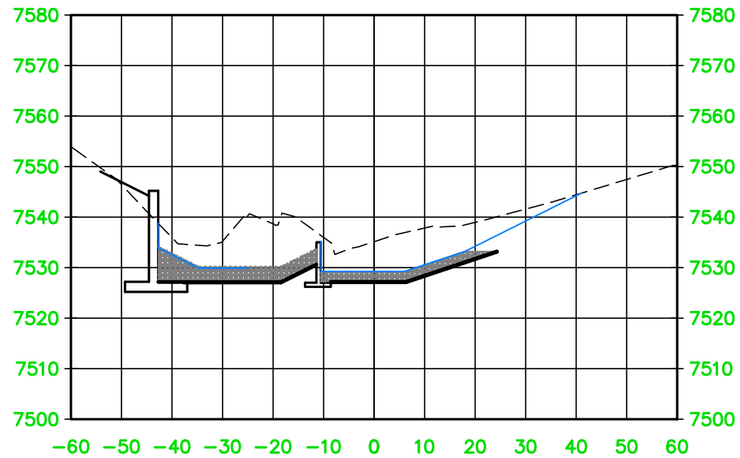

55+00.00

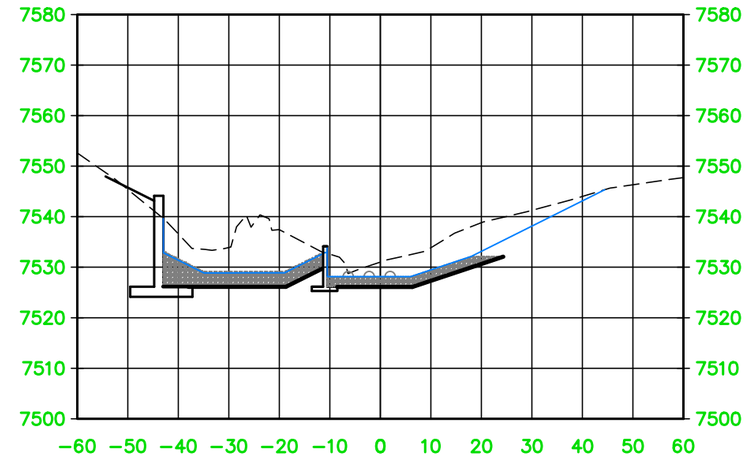

54+50.00

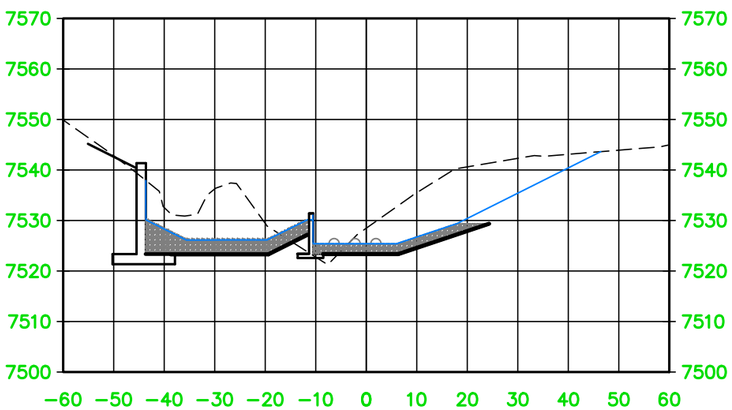

54+20.00

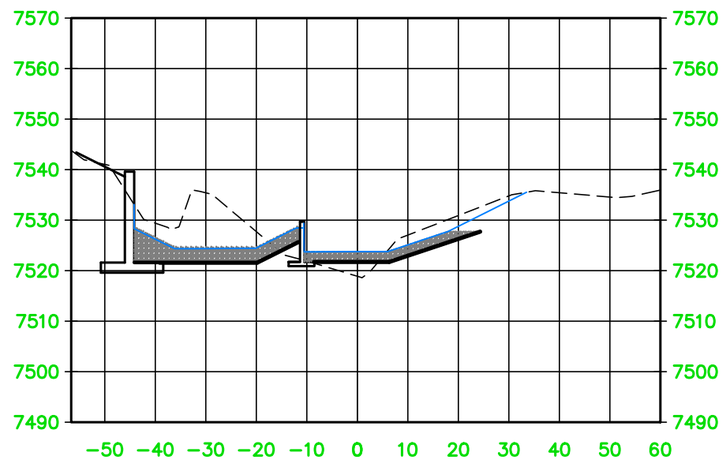

54+00.00

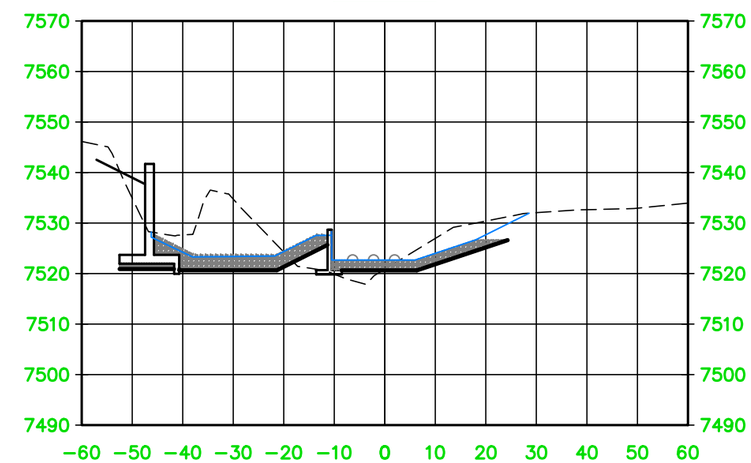

53+73.06

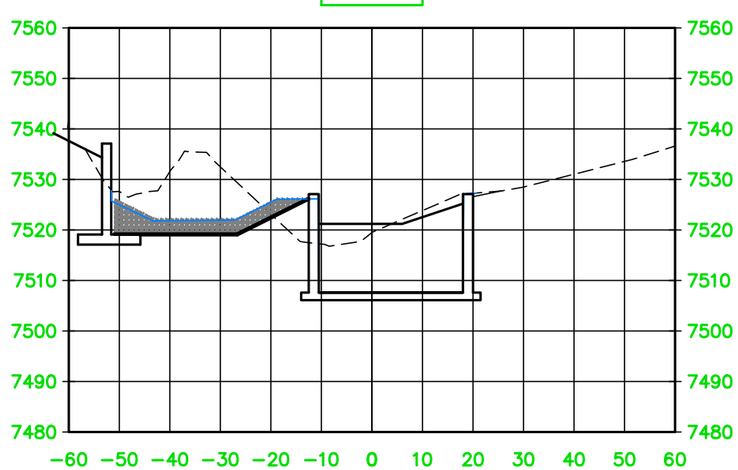

53+60.00

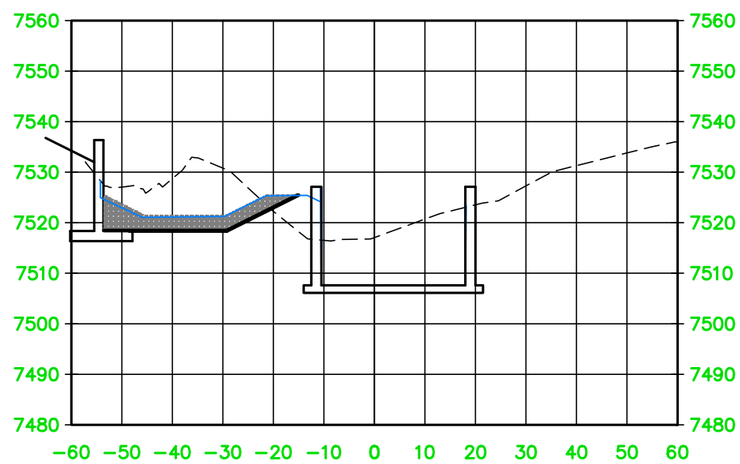

53+50.00

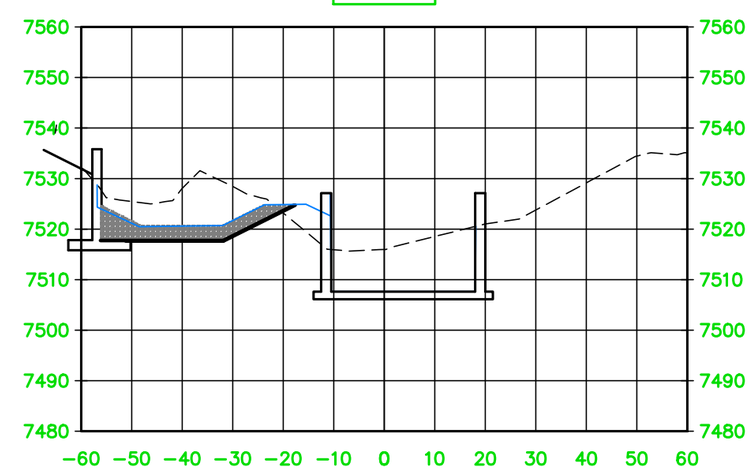

THIS DRAWING IS TO BE USED FOR THIS PROJECT AND THIS PROJECT ONLY UNLESS AUTHORIZED BY THE PROJECT ENGINEER AT JOHANSEN & TUTTLE ENGINEERS, INC.

DESIGNED	HRT	3-19	CHECKED MDJ 3-19
DRAWN	DMF	3-19	CHECKED MDJ 3-19
SURVEYED	BHT	3-19	CHECKED LMS 3-19
R.O.W.			CHECKED

PROJECT FILE
TrailMtnEmergency Protection\ENGR\DRAWINGS\Sheets\Rilda

REV.	DESCRIPTION	BY.	DATE

johansen & tuttle ENGINEERING INC.
P.O. BOX 487, CASTLE DALE, UTAH 84513 (435) 381-2523
FAX (435) 381-2522 email jt @ etv.net

TRAIL MOUNTAIN
EMERGENCY WATERSHED
PROTECTION PROJECT
RILDA CANYON NORTH
EMERY SPRINGS 2019

EMERY COUNTY

GROUTED ROCK RIP-RAP
CHANNEL/ ARMORED
BY-PASS CHANNEL
CROSS-SECTIONS

SHEET NO.
7

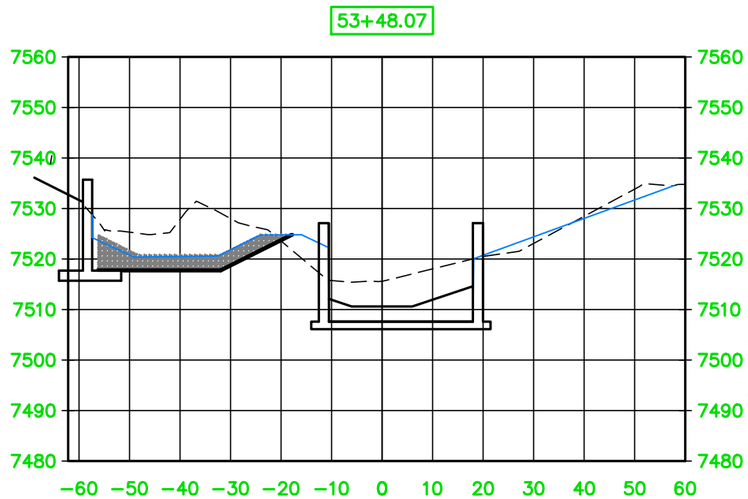

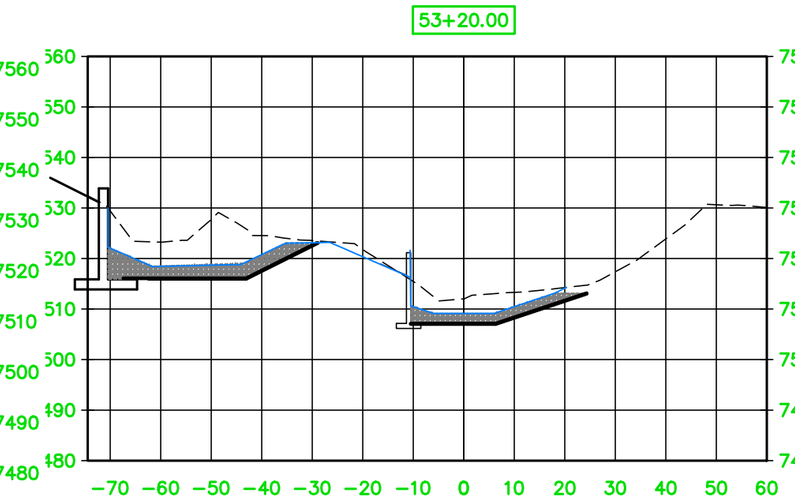

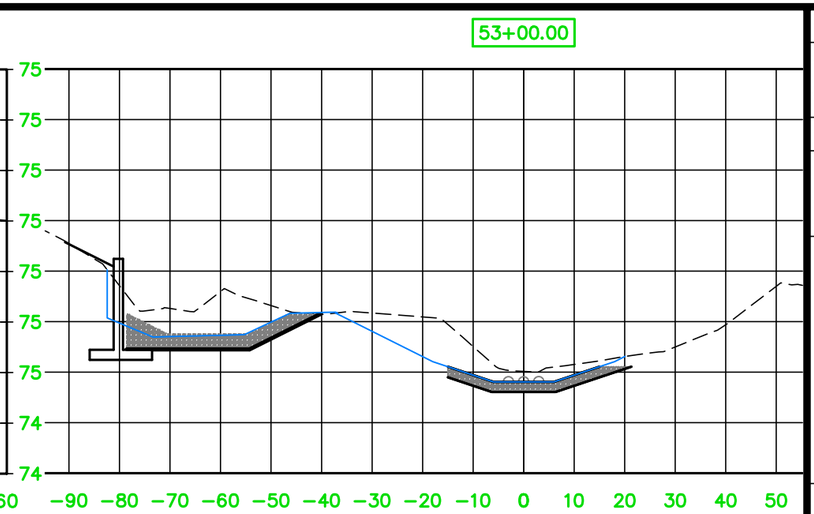

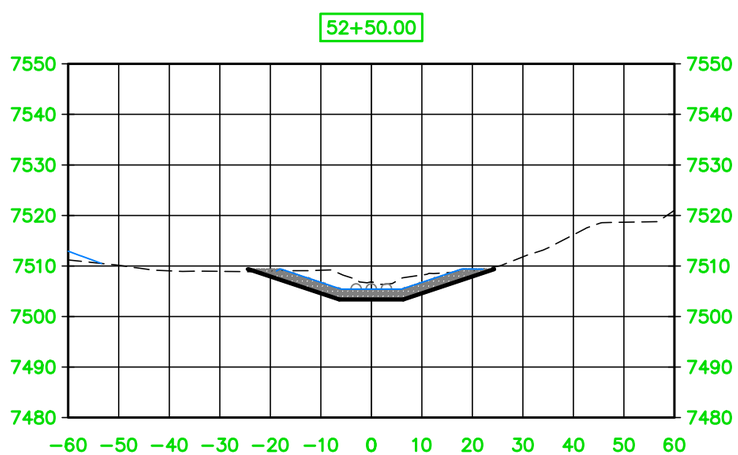

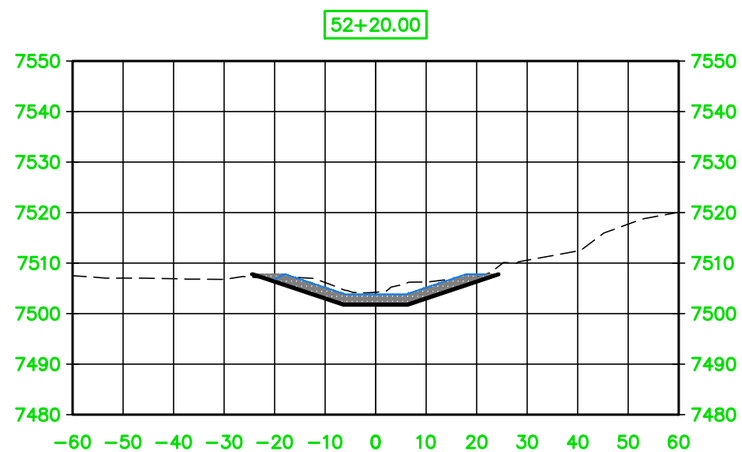

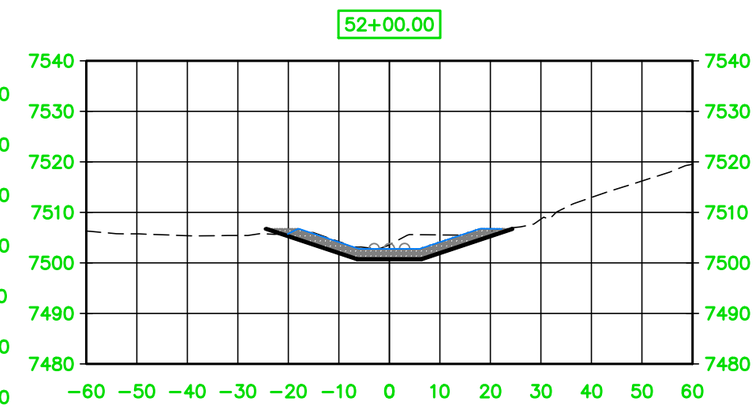

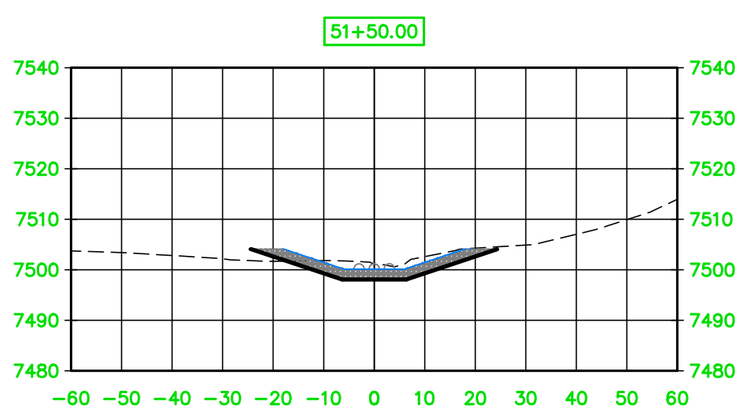

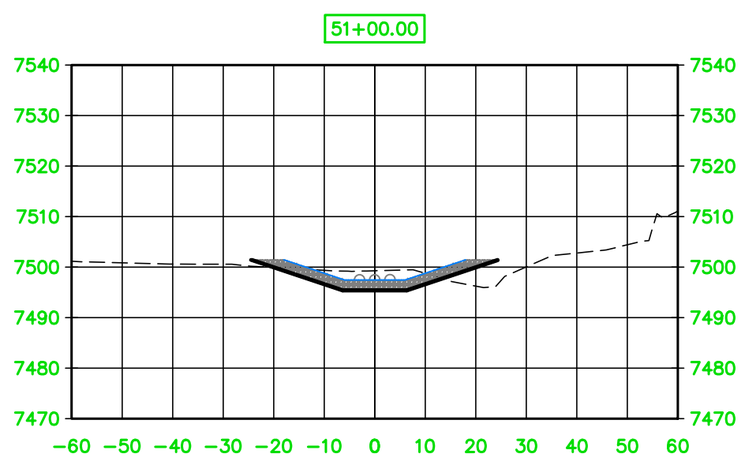

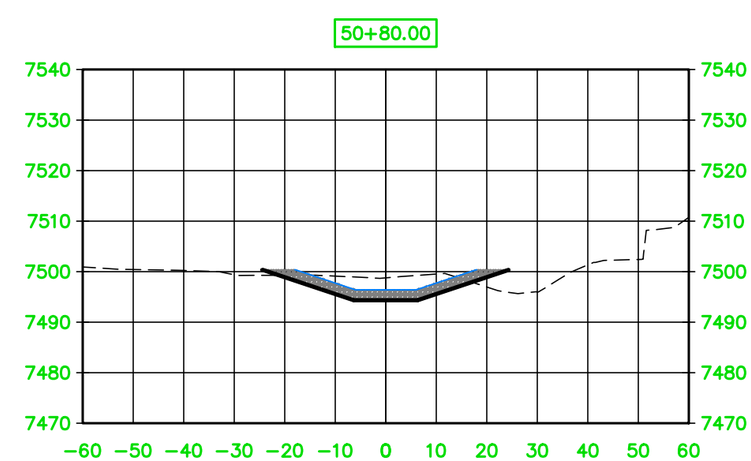

DESIGNED	HRT	3-19	CHECKED MDJ 3-19
DRAWN	DMF	3-19	CHECKED MDJ 3-19
SURVEYED	BHT	3-19	CHECKED LMS 3-19
R.O.W.			CHECKED

PROJECT FILE
70\Rilda Canyon\Trail Mountain Emergency Protection\ENGR\DRAWINGS\Sheets\Rilda

THIS DRAWING IS TO BE USED FOR THIS PROJECT AND THIS PROJECT ONLY UNLESS AUTHORIZED BY THE PROJECT ENGINEER AT JOHANSEN & TUTTLE ENGINEERS INC.

REV.	DESCRIPTION	BY.	DATE

johansen & tuttle ENGINEERING INC.
P.O. BOX 487, CASTLE DALE, UTAH 84513 (435) 381-2523
FAX (435) 381-2522 email jt @ etv.net

TRAIL MOUNTAIN
EMERGENCY WATERSHED
PROTECTION PROJECT
RILDA CANYON NORTH
EMERY SPRINGS 2019

EMERY COUNTY

GROUTED ROCK RIP-RAP
CHANNEL/ ARMORED
BY-PASS CHANNEL
CROSS-SECTIONS

SHEET NO.
8

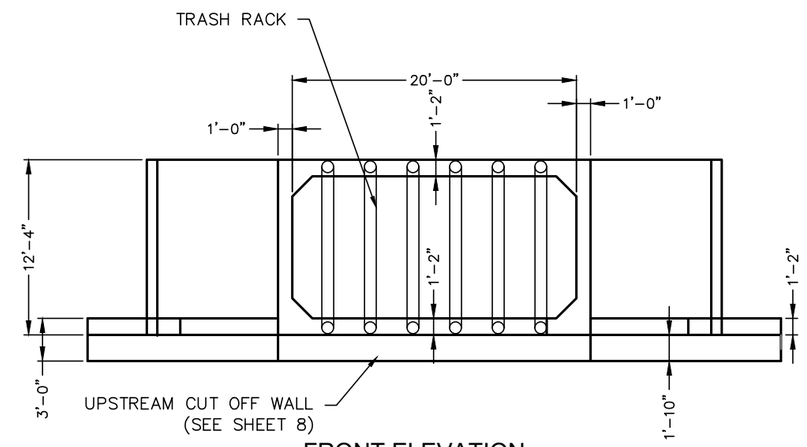

FRONT ELEVATION

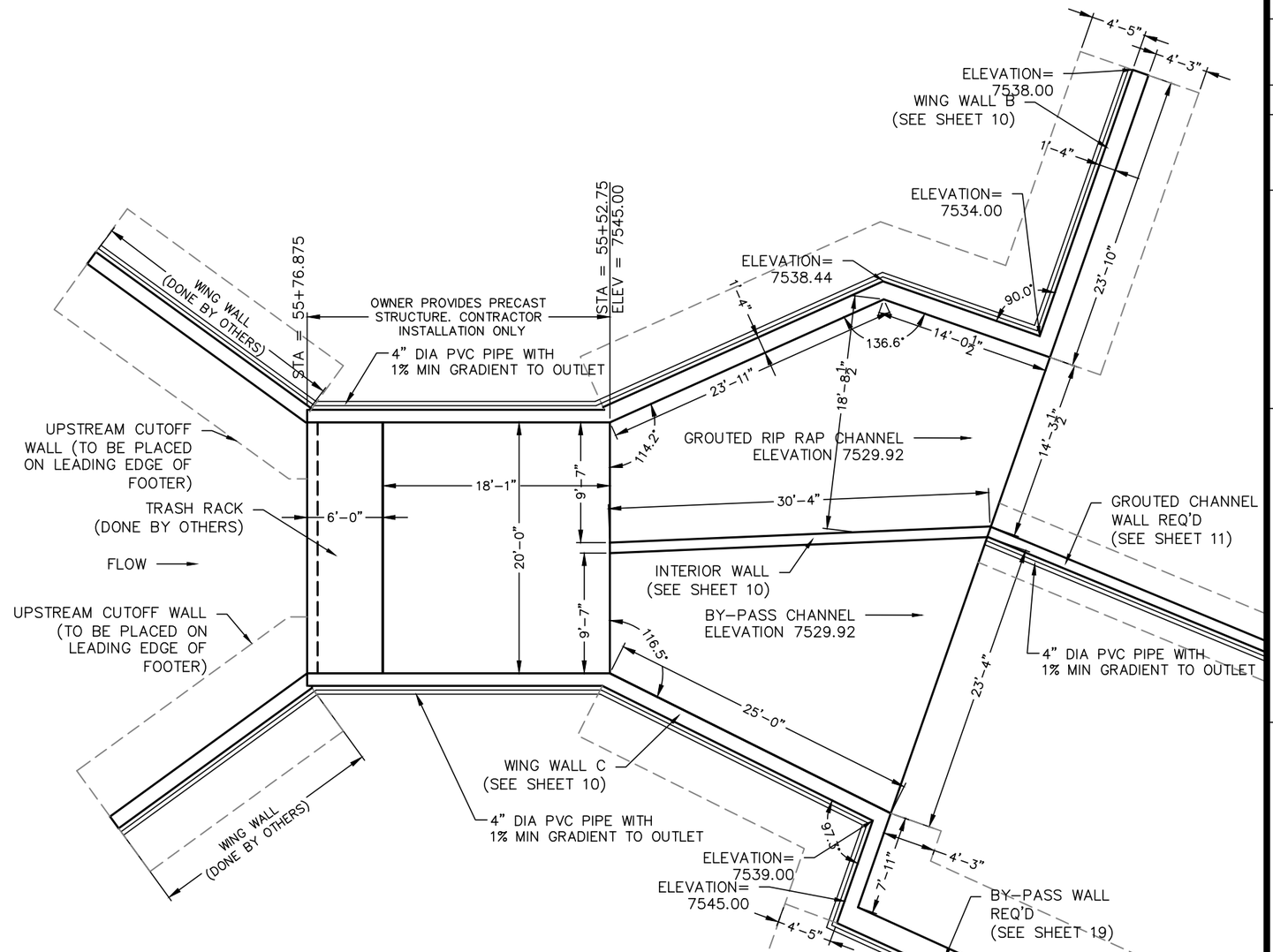

PLAN VIEW

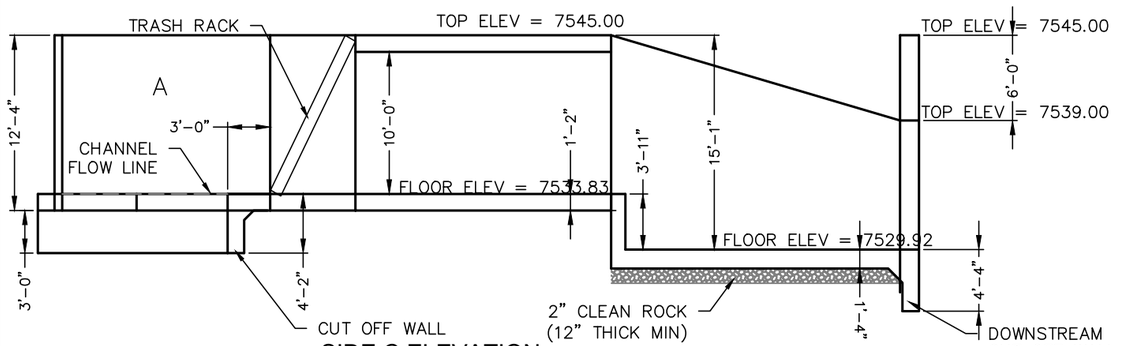

SIDE C ELEVATION

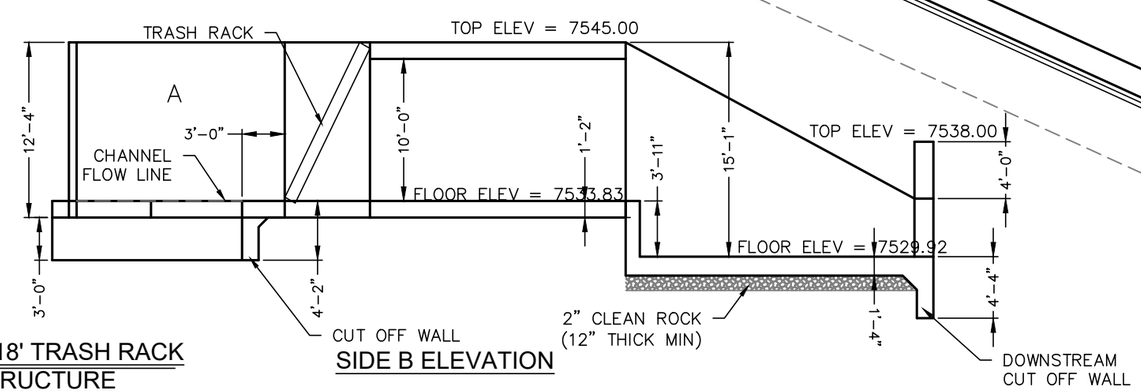

SIDE B ELEVATION

10'X20'X18' TRASH RACK
STRUCTURE
SCALE: 3/32" = 1'-0"

DESIGNED	HRT	3-19	CHECKED MDJ 3-19
DRAWN	DMF	3-19	CHECKED MDJ 3-19
SURVEYED	BHT	3-19	CHECKED LMS 3-19
R.O.W.			CHECKED

THIS DRAWING IS TO BE USED FOR THIS PROJECT AND THIS PROJECT ONLY UNLESS AUTHORIZED BY THE PROJECT ENGINEER AT JOHANSEN & TUTTLE ENGINEERS, INC.

PROJECT FILE:
P:\Sheets\2018\EM\Emery County Trail Mountain Emergency Protection\ENGR\DRAWINGS\Sheets\Rilda

REV.	DESCRIPTION	BY	DATE
1	ADDED 4" PVC PIPE TO DRAWING.	DMF	10-10-19

johansen & tuttle ENGINEERING INC.
P.O. BOX 487, CASTLE DALE, UTAH 84513 (435) 381-2523
FAX (435) 381-2522 email jt @ etv.net

TRAIL MOUNTAIN
EMERGENCY WATERSHED
PROTECTION PROJECT
RILDA CANYON NORTH
EMERY SPRINGS 2019

EMERY COUNTY

TRASH RACK
STRUCTURE
DETAIL SHEET

SHEET NO.
9

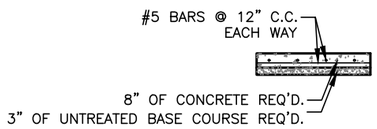

8" CONCRETE FLATWORK

SCALE: 3/16" = 1'-0"

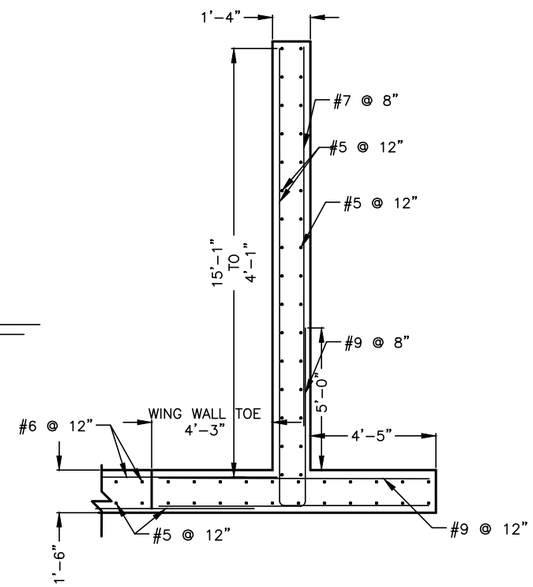

WING WALL B & C REINFORCEMENT DETAIL

SCALE: 3/16" = 1'-0"

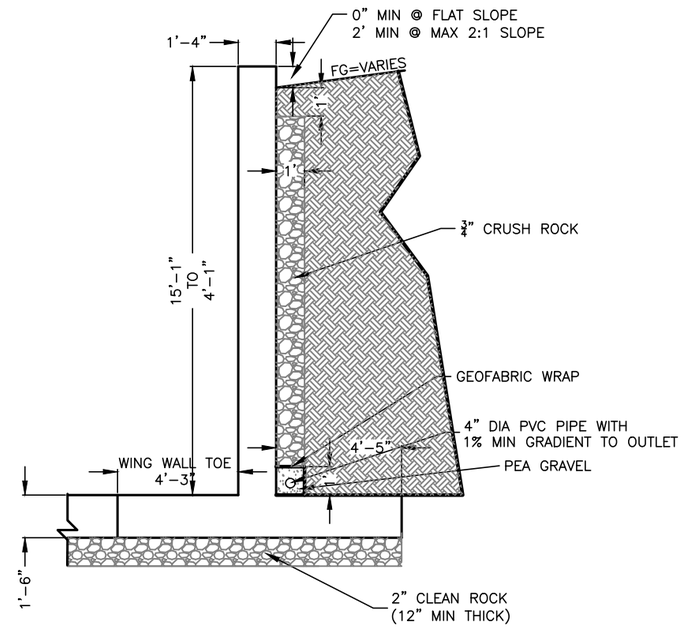

WING WALL B & C

SCALE: 3/16" = 1'-0"

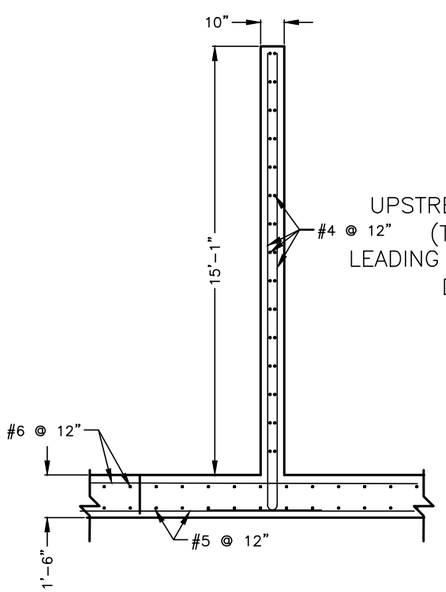

INTERIOR WALL REINFORCEMENT DETAIL

SCALE: 3/16" = 1'-0"

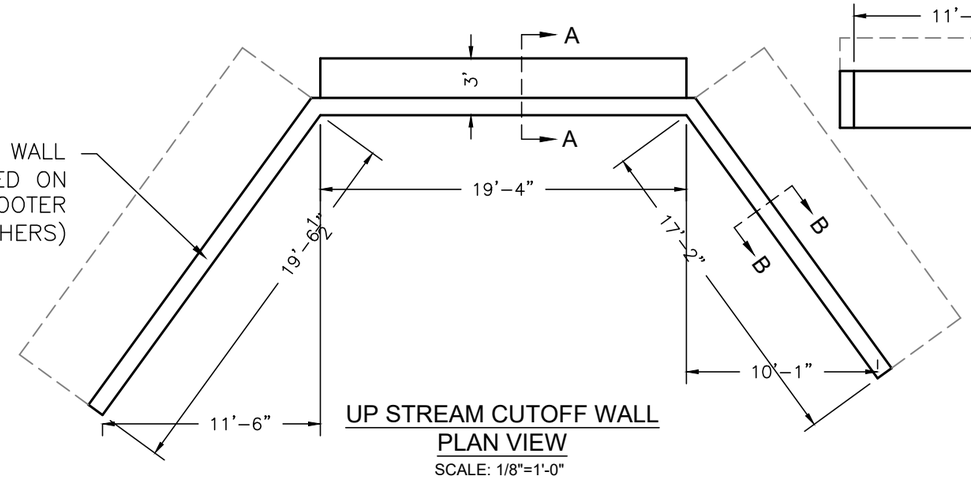

UP STREAM CUTOFF WALL PLAN VIEW

SCALE: 1/8"=1'-0"

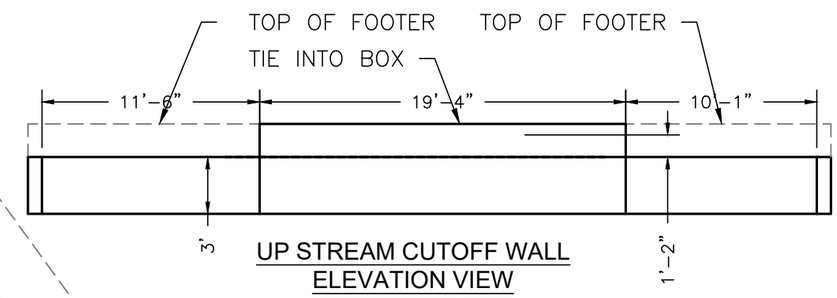

UP STREAM CUTOFF WALL ELEVATION VIEW

SCALE: 1/8"=1'-0"

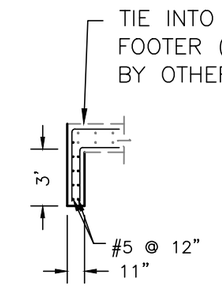

SECTION B-B

SCALE: 1/8"=1'-0"

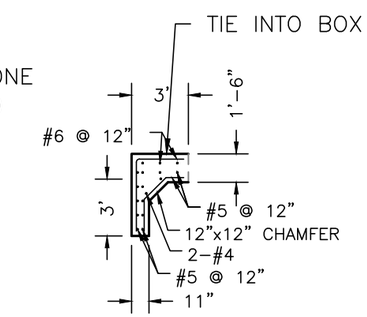

SECTION A-A

SCALE: 1/8"=1'-0"

THIS DRAWING IS TO BE USED FOR THIS PROJECT AND THIS PROJECT ONLY UNLESS AUTHORIZED BY THE PROJECT ENGINEER AT JOHANSEN & TUTTLE ENGINEERS, INC.

DESIGNED	HRT	3-19	CHECKED	MDJ 3-19
DRAWN	DMF	3-19	CHECKED	MDJ 3-19
SURVEYED	BHT	3-19	CHECKED	LMS 3-19
R.O.W.			CHECKED	

PROJECT FILE
T:\Projects\2018\Emery County Emergency Protection\ENGR\DRAWINGS\Sheets\Rilda

REV.	DESCRIPTION	BY.	DATE
1	CHANGED ROCK PER NRCS.	DMF	10-10-19

johansen & tuttle ENGINEERING INC.
P.O. BOX 487, CASTLE DALE, UTAH 84513 (435) 381-2523
FAX (435) 381-2522 email jt @ etv.net

TRAIL MOUNTAIN
EMERGENCY WATERSHED
PROTECTION PROJECT
RILDA CANYON NORTH
EMERY SPRINGS 2019

EMERY COUNTY

TRASH RACK
REINFORCEMENT
DETAIL SHEET

SHEET NO.
10

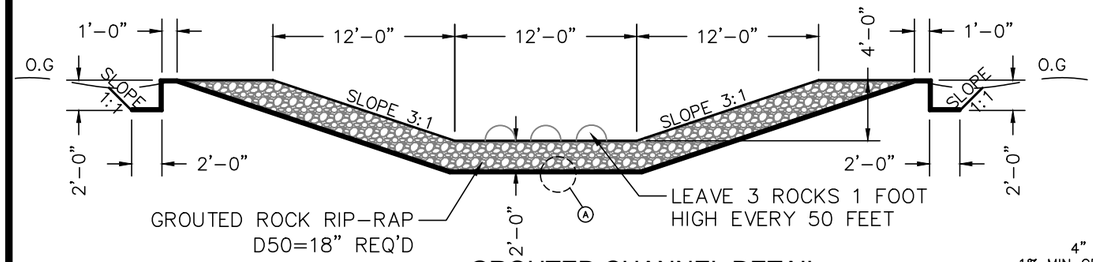

GROUTED CHANNEL DETAIL

STA: 50+19 to 53+10
SCALE: 1" = 10'-0"

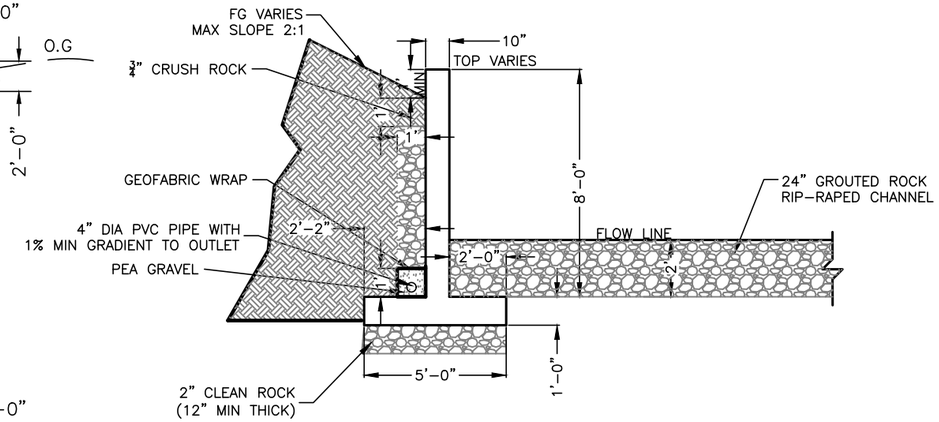

GROUTED CHANNEL WALL 53+74 to 55+20

SCALE: 3/16" = 1'-0"

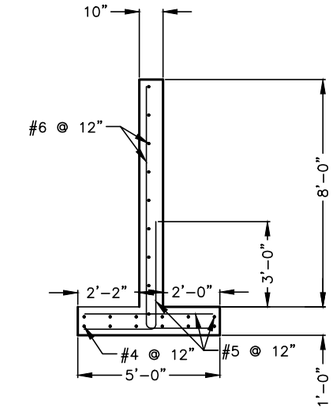

GROUTED CHANNEL WALL STA.53+74 TO STA. 55+20 REINFORCEMENT DETAIL

SCALE: 3/16" = 1'-0"

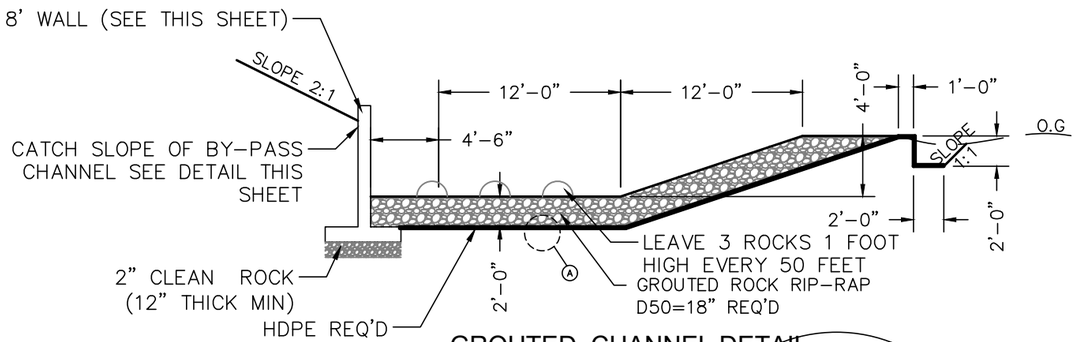

GROUTED CHANNEL DETAIL

53+74 to 55+20
SCALE: 1" = 10'-0"

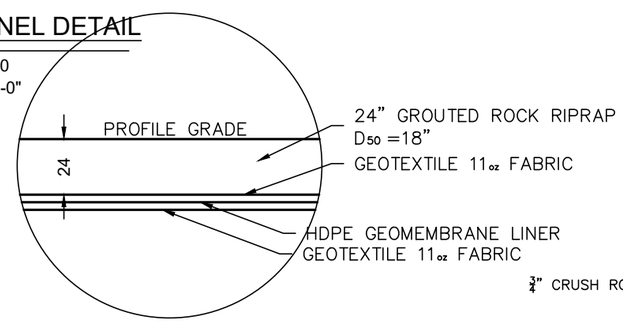

DETAIL (A)

SCALE: 1" = 5'-0"

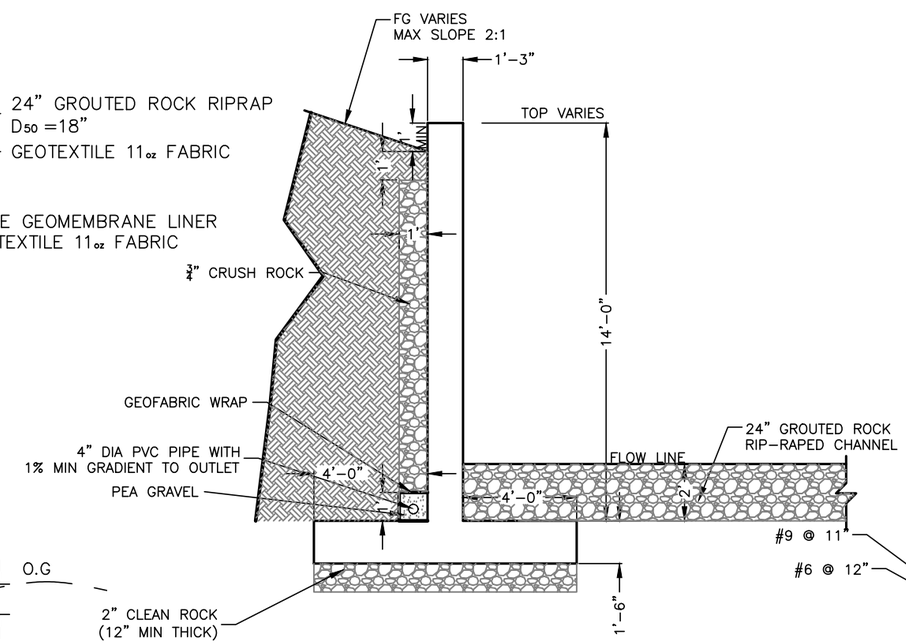

GROUTED CHANNEL WALL 53+09 TO 53+48 AND END WINGWALL

SCALE: 3/16" = 1'-0"

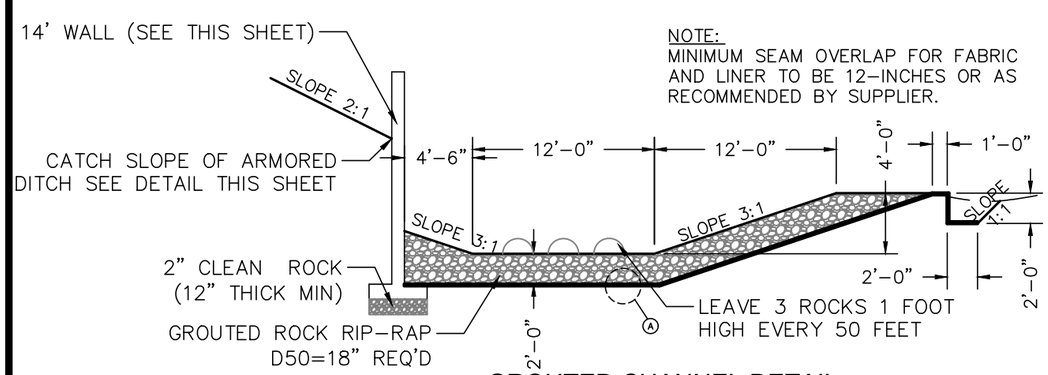

NOTE:
MINIMUM SEAM OVERLAP FOR FABRIC AND LINER TO BE 12-INCHES OR AS RECOMMENDED BY SUPPLIER.

GROUTED CHANNEL DETAIL

STA: 53+09 to 53+48
SCALE: 1" = 10'-0"

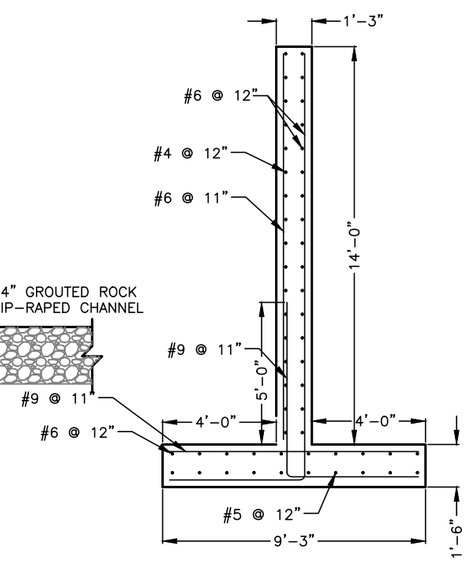

GROUTED CHANNEL WALL 53+09 TO 53+48 AND END WINGWALL REINFORCEMENT DETAIL

SCALE: 3/16" = 1'-0"

DESIGNED	HRT	3-19	CHECKED MDJ 3-19
DRAWN	DMF	3-19	CHECKED MDJ 3-19
SURVEYED	BHT	3-19	CHECKED LMS 3-19
R.O.W.			CHECKED

THIS DRAWING IS TO BE USED FOR THIS PROJECT AND THIS PROJECT ONLY UNLESS AUTHORIZED BY THE PROJECT ENGINEER AT JOHANSEN & TUTTLE ENGINEERS, INC.

PROJECT FILE:
T:\Projects\2019\TRAIL Mountain Emergency Protection\ENGR\DRAWINGS\Sheets\Rilda

REV.	DESCRIPTION	BY	DATE
1	CHANGED ROCK PER NRCS.	DMF	10-10-19

johansen & tuttle ENGINEERING INC.
P.O. BOX 487, CASTLE DALE, UTAH 84513 (435) 381-2523
FAX (435) 381-2522 email jt @ etv.net

TRAIL MOUNTAIN
EMERGENCY WATERSHED
PROTECTION PROJECT
RILDA CANYON NORTH
EMERY SPRINGS 2019

EMERY COUNTY

GROUTED CHANNEL
TYPICAL SECTIONS

SHEET NO.
11

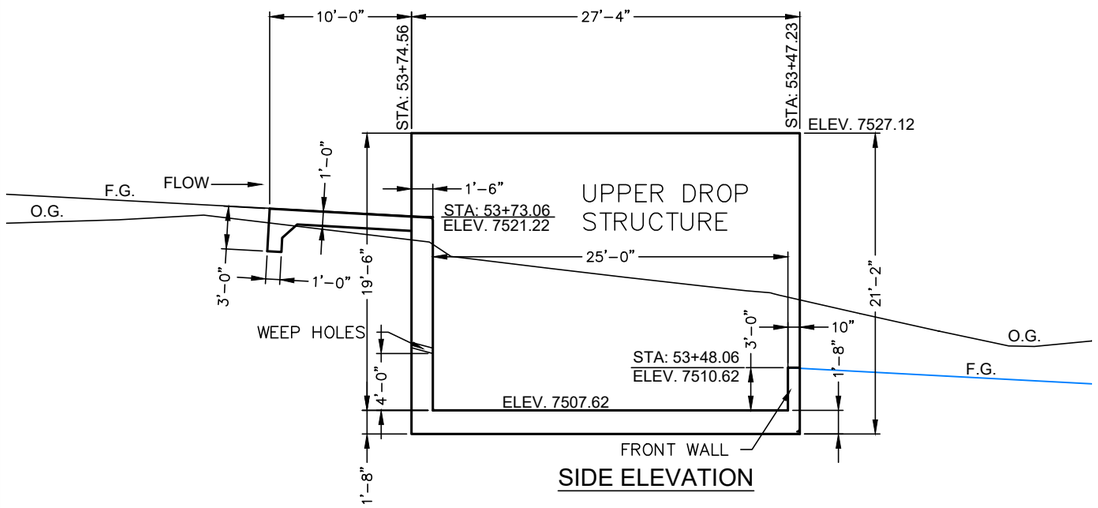

SIDE ELEVATION

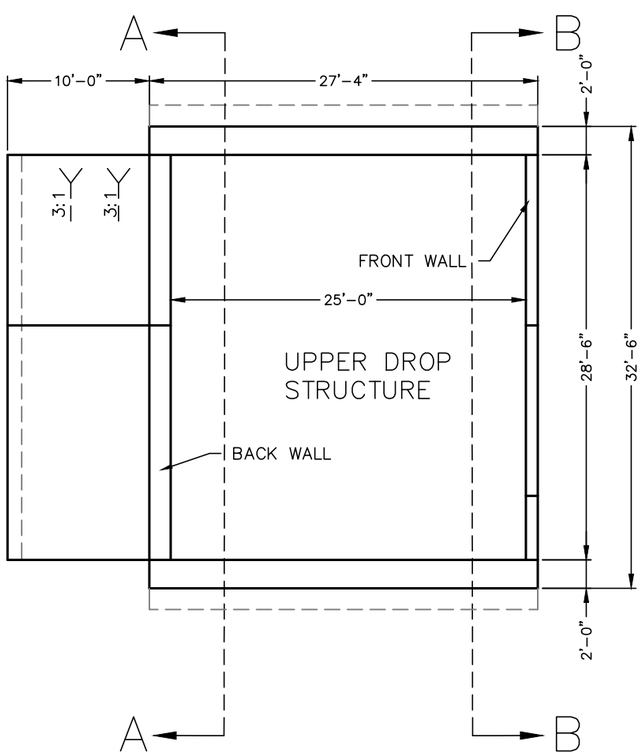

PLAN VIEW

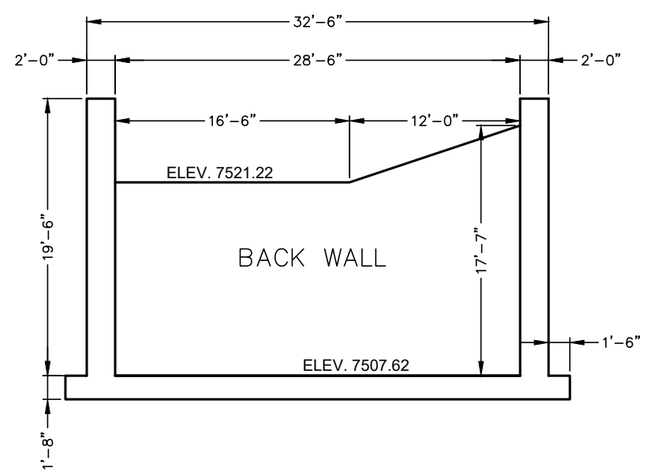

SECTION A-A
STA: 53+73.06

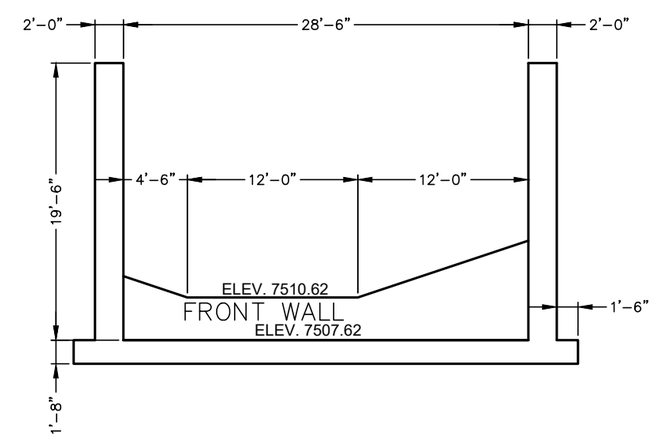

SECTION B-B
STA: 53+48.06

UPPER DROP STRUCTURE
SCALE: 3/32" = 1'-0"

THIS DRAWING IS TO BE USED FOR THIS PROJECT AND THIS PROJECT ONLY UNLESS AUTHORIZED BY THE PROJECT ENGINEER AT JOHANSEN & TUTTLE ENGINEERS, INC.

DESIGNED	HRT	3-19	CHECKED MDJ 3-19
DRAWN	DMF	3-19	CHECKED MDJ 3-19
SURVEYED	BHT	3-19	CHECKED LMS 3-19
R.O.W.			CHECKED

PROJECT FILE
TRAIL Mountain 2019
Emergency Protection\ENGR\DRAWINGS\Sheets\Rilda

REV.	DESCRIPTION	BY	DATE

johansen & tuttle ENGINEERING INC.
P.O. BOX 487, CASTLE DALE, UTAH 84513 (435) 381-2523
FAX (435) 381-2522 email jt @ etv.net

TRAIL MOUNTAIN
EMERGENCY WATERSHED
PROTECTION PROJECT
RILDA CANYON NORTH
EMERY SPRINGS 2019

EMERY COUNTY

UPPER DROP
STRUCTURE
DETAIL SHEET

SHEET NO.
12

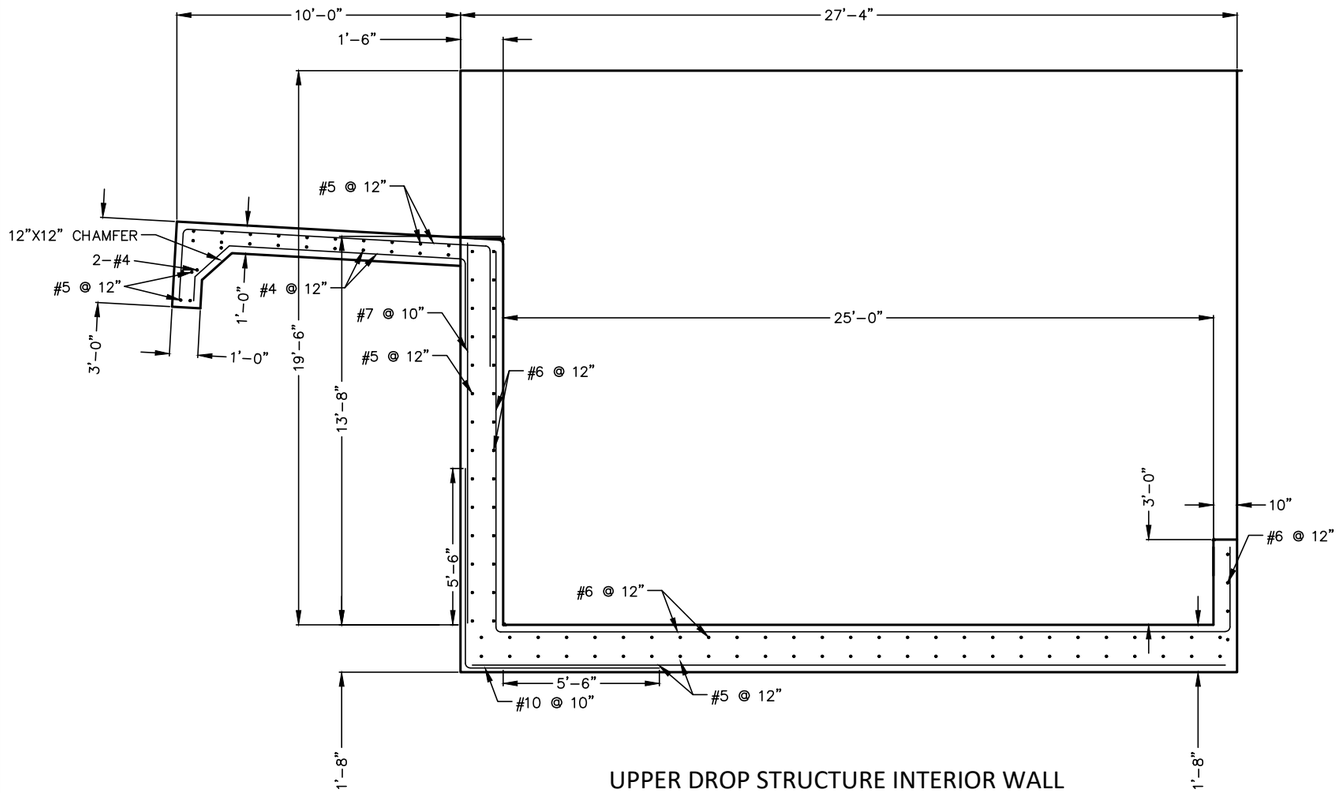

UPPER DROP STRUCTURE INTERIOR WALL REINFORCEMENT DETAIL

SCALE: 3/16" = 1'-0"

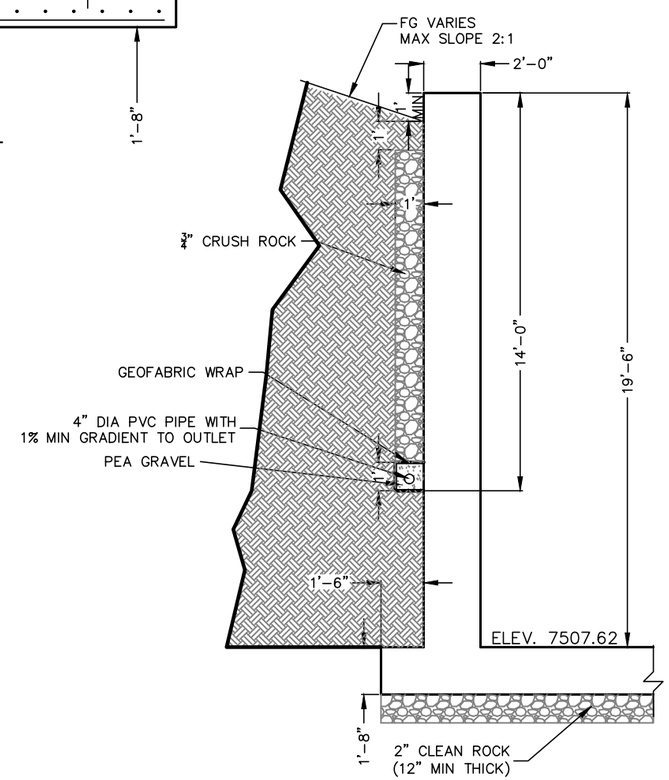

UPPER DROP STRUCTURE EXTERIOR WALL DETAIL
STA. 53+48 to 53+74

SCALE: 3/16" = 1'-0"

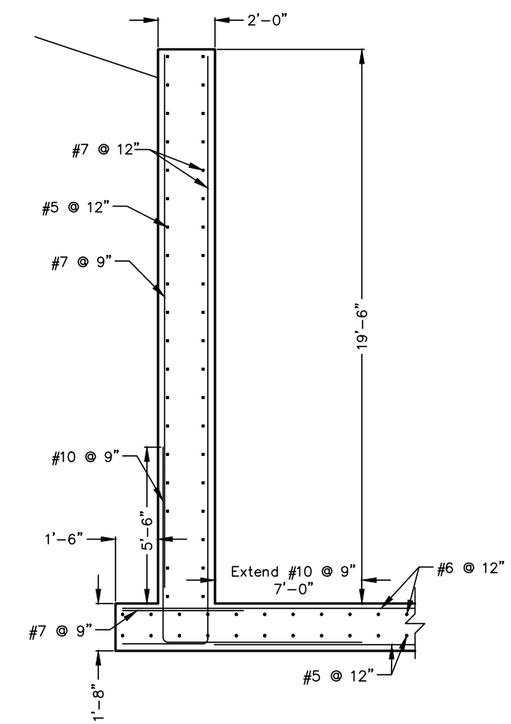

UPPER DROP STRUCTURE EXTERIOR WALL REINFORCEMENT DETAIL
STA. 53+48 to 53+74

SCALE: 3/16" = 1'-0"

THIS DRAWING IS TO BE USED FOR THIS PROJECT AND THIS PROJECT ONLY UNLESS AUTHORIZED BY THE PROJECT ENGINEER AT JOHANSEN & TUTTLE ENGINEERS, INC.

DESIGNED	HRT	3-19	CHECKED MDJ 3-19
DRAWN	DMF	3-19	CHECKED MDJ 3-19
SURVEYED	BHT	3-19	CHECKED LMS 3-19
R.O.W.			CHECKED

PROJECT FILE
TrailMtnEmergProt2019
Emergency Protection\ENGR\DRAWINGS\Sheets\Rilda

REV.	DESCRIPTION	BY	DATE
1	CHANGED ROCK PER NRCS.	DMF	10-10-19

Johansen & Tuttle ENGINEERING INC.
P.O. BOX 487, CASTLE DALE, UTAH 84513 (435) 381-2523
FAX (435) 381-2522 email jt @ etv.net

TRAIL MOUNTAIN
EMERGENCY WATERSHED
PROTECTION PROJECT
RILDA CANYON NORTH
EMERY SPRINGS 2019

EMERY COUNTY

UPPER DROP
STRUCTURE
REINFORCEMENT
DETAIL SHEET

SHEET NO.
13

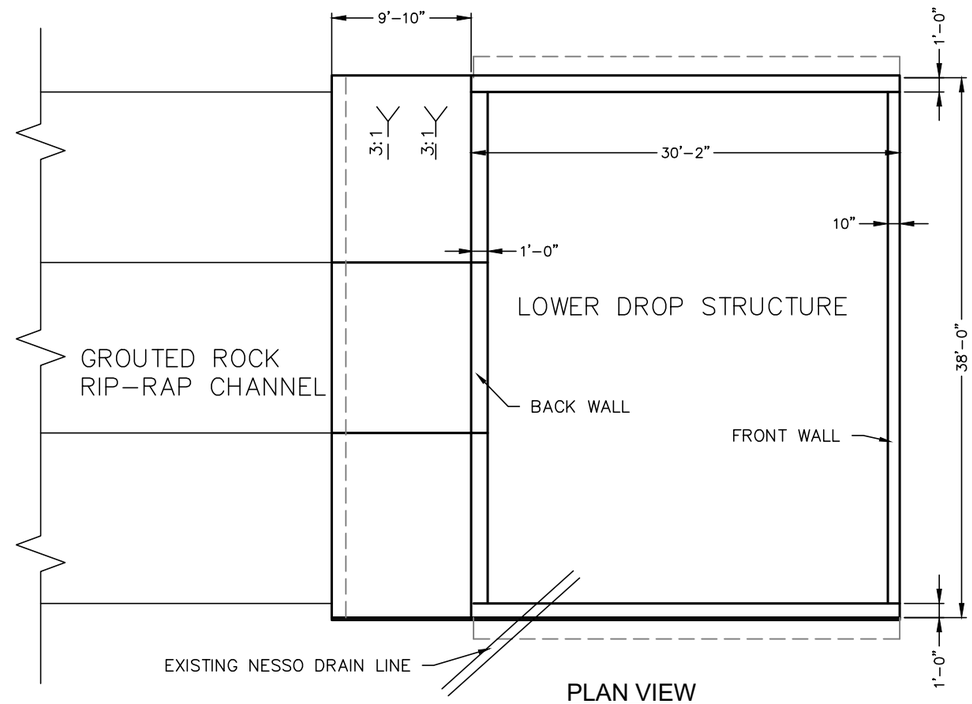

PLAN VIEW

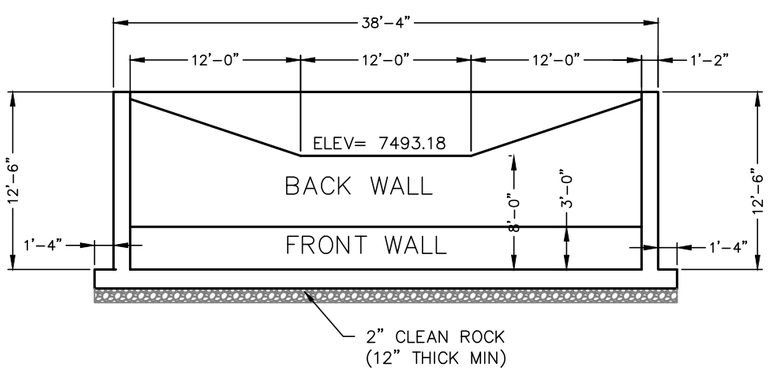

FRONT ELEVATION

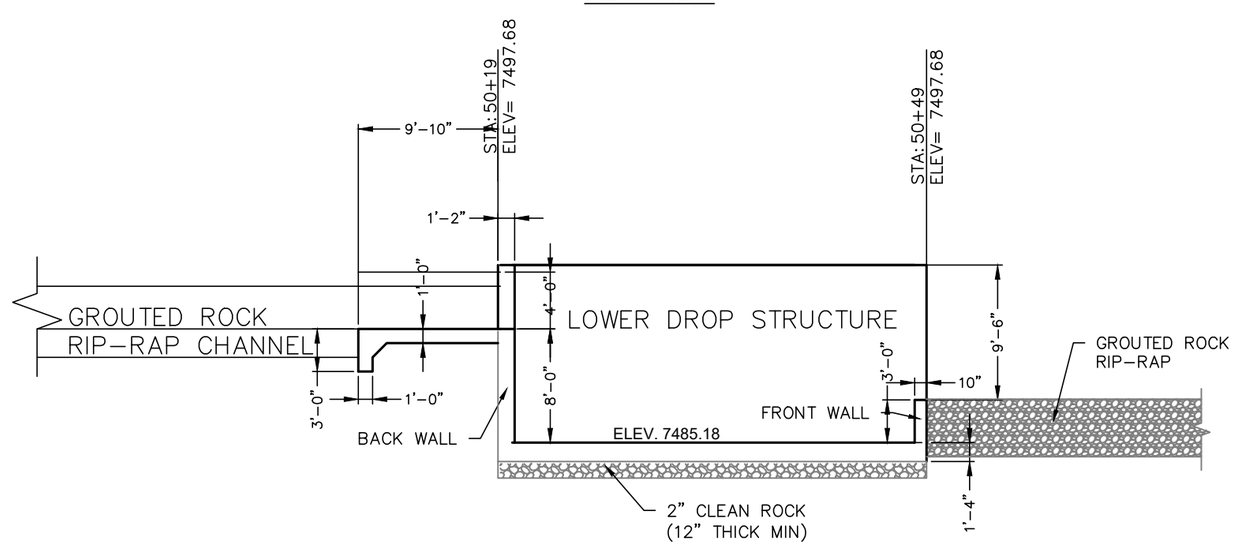

SIDE ELEVATION

LOWER DROP STRUCTURE

SCALE: 3/32" = 1'-0"

THIS DRAWING IS TO BE USED FOR THIS PROJECT AND THIS PROJECT ONLY UNLESS AUTHORIZED BY THE PROJECT ENGINEER AT JOHANSEN & TUTTLE ENGINEERS, INC.

REV.	DESCRIPTION	BY.	DATE
1	CHANGED ROCK PER NRCS.	DMF	10-10-19

DESIGNED	HRT	3-19	CHECKED MDJ 3-19
DRAWN	DMF	3-19	CHECKED MDJ 3-19
SURVEYED	BHT	3-19	CHECKED LMS 3-19
R.O.W.			CHECKED

PROJECT FILE:
T:\Projects\2018\Emery County Trail Mountain Emergency Protection\ENGR\DRAWINGS\Sheets\Rilda

johansen & tuttle ENGINEERING INC.
P.O. BOX 487, CASTLE DALE, UTAH 84513 (435) 381-2523
FAX (435) 381-2522 email jt @ etv.net

TRAIL MOUNTAIN
EMERGENCY WATERSHED
PROTECTION PROJECT
RILDA CANYON NORTH
EMERY SPRINGS 2019

EMERY COUNTY

LOWER DROP
STRUCTURE
DETAIL SHEET

SHEET NO.
14

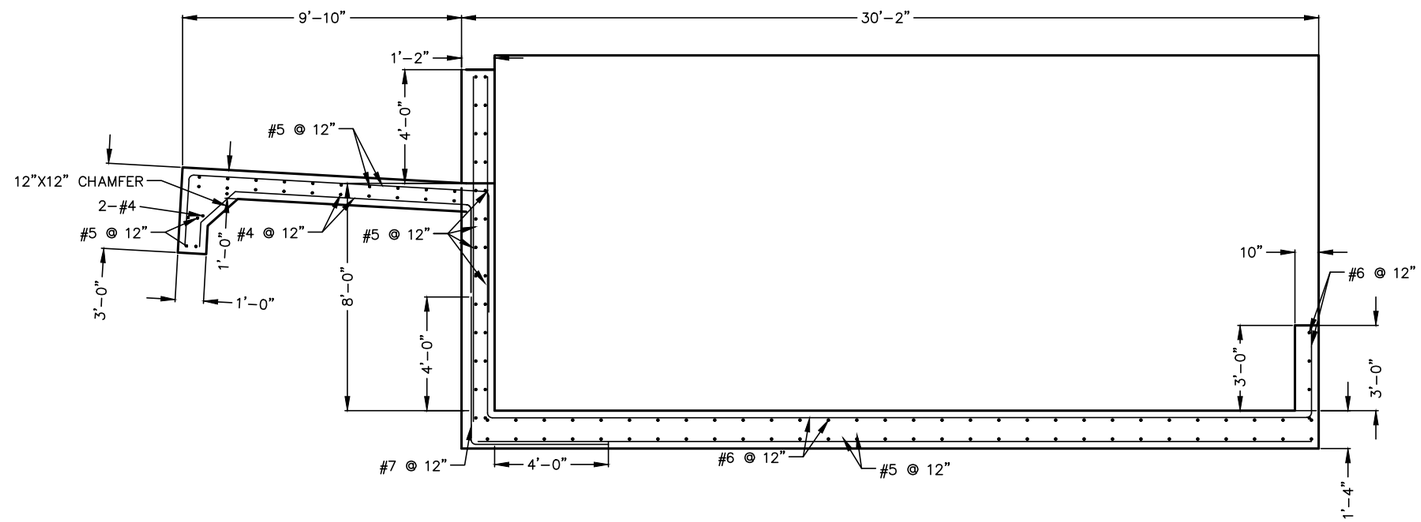

LOWER DROP STRUCTURE INTERIOR WALL
REINFORCEMENT DETAIL

SCALE: 3/16" = 1'-0"

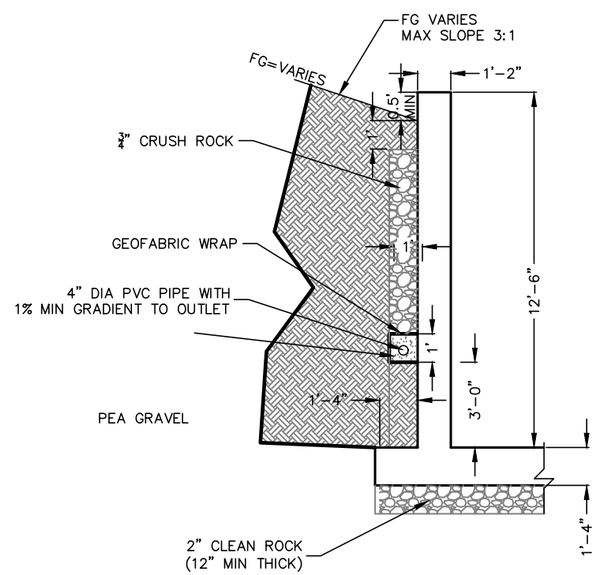

LOWER DROP STRUCTURE EXTERIOR WALLS

SCALE: 3/16" = 1'-0"

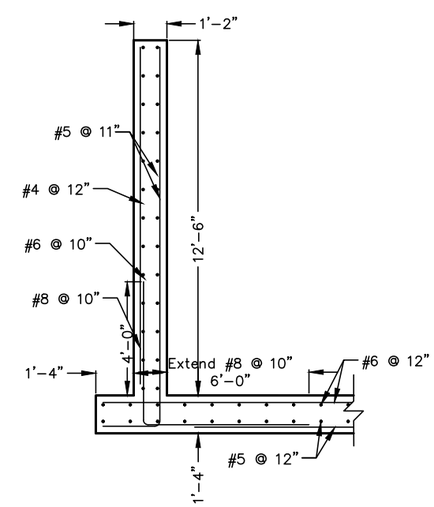

LOWER DROP STRUCTURE EXTERIOR WALLS
REINFORCEMENT DETAIL

SCALE: 3/16" = 1'-0"

DESIGNED	HRT	3-19	CHECKED MDJ 3-19
DRAWN	DMF	3-19	CHECKED MDJ 3-19
SURVEYED	BHT	3-19	CHECKED LMS 3-19
R.O.W.			CHECKED

PROJECT FILE
TS-Sheet-PT01
Emergency Protection\ENGR\DRAWINGS\Sheets\Rilda

THIS DRAWING IS TO BE USED FOR THIS PROJECT AND THIS PROJECT ONLY UNLESS AUTHORIZED BY THE PROJECT ENGINEER AT JOHANSEN & TUTTLE ENGINEERS, INC.

REV.	DESCRIPTION	BY.	DATE
1	CHANGED ROCK PER NRCS.	DMF	10-10-19

johansen & tuttle ENGINEERING INC.
P.O. BOX 487, CASTLE DALE, UTAH 84513 (435) 381-2523
FAX (435) 381-2522 email jt @ etv.net

TRAIL MOUNTAIN
EMERGENCY WATERSHED
PROTECTION PROJECT
RILDA CANYON NORTH
EMERY SPRINGS 2019

EMERY COUNTY

LOWER DROP
STRUCTURE
REINFORCEMENT
DETAIL SHEET

SHEET NO.
15

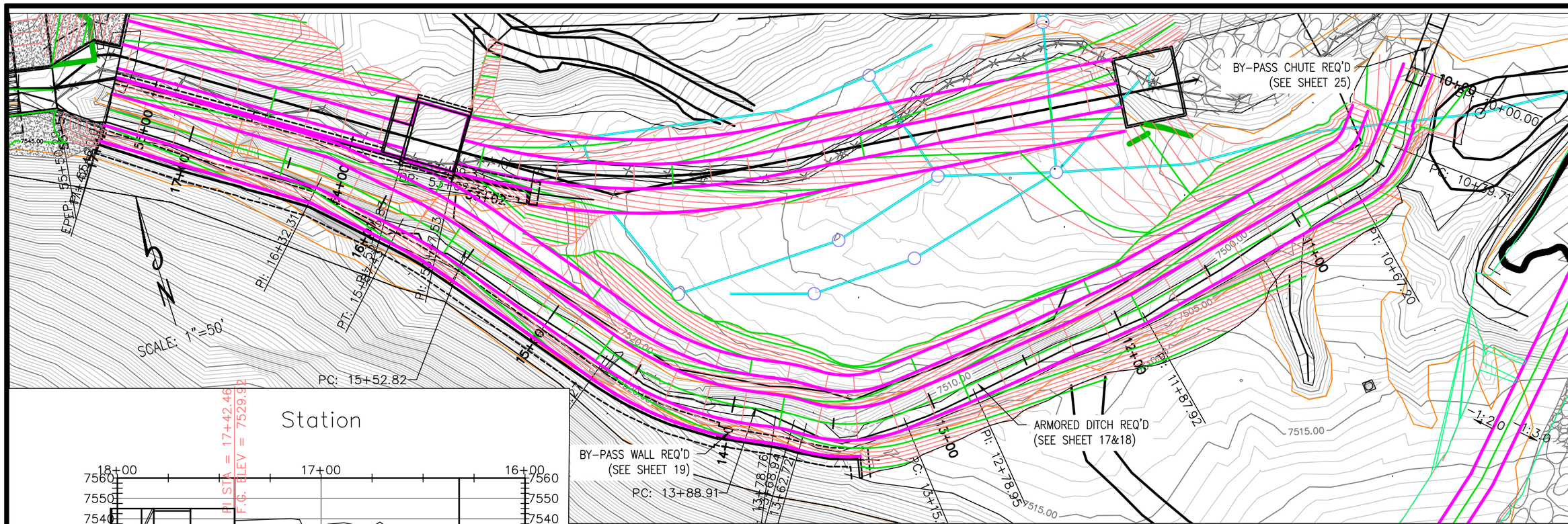

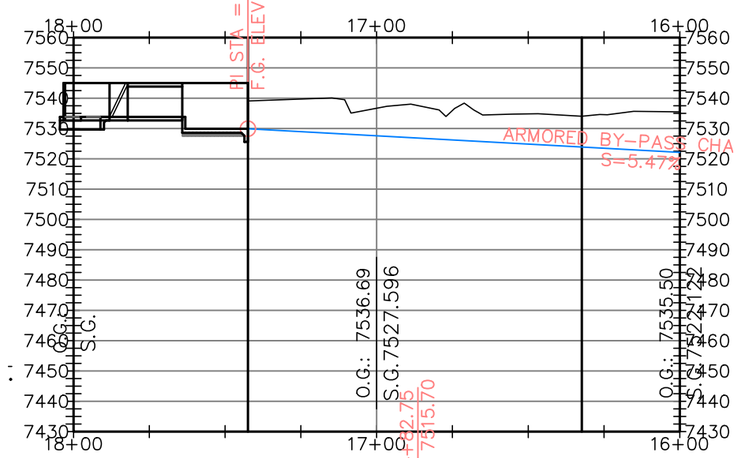

LEGEND

8" EXISTING SPRING COLLECTION PIPE

EXISTING MANHOLE

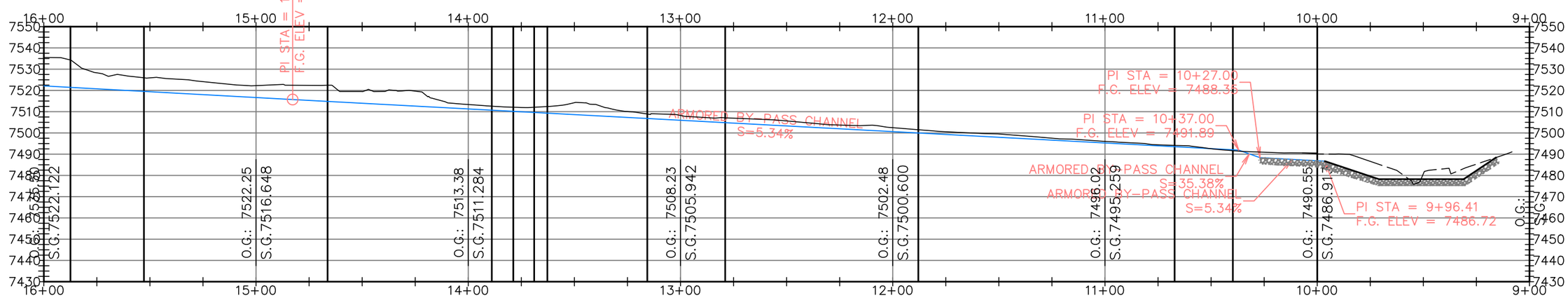

THIS DRAWING IS TO BE USED FOR THIS PROJECT AND THIS PROJECT ONLY UNLESS AUTHORIZED BY THE PROJECT ENGINEER AT JOHANSEN & TUTTLE ENGINEERS, INC.

REV.	DESCRIPTION	BY.	DATE

DESIGNED	HRT	3-19	CHECKED MDJ 3-19
DRAWN	DMF	3-19	CHECKED MDJ 3-19
SURVEYED	BHT	3-19	CHECKED LMS 3-19
R.O.W.			CHECKED

PROJECT FILE
P:\2019\Trail Mountain Emergency Protection\ENGR\DRAWINGS\Sheets\Ridge

johansen & tuttle ENGINEERING INC.
P.O. BOX 487, CASTLE DALE, UTAH 84513 (435) 381-2523
FAX (435) 381-2522 email jt@etv.net

TRAIL MOUNTAIN
EMERGENCY WATERSHED
PROTECTION PROJECT
RILDA CANYON NORTH
EMERY SPRINGS 2019

EMERY COUNTY

ARMORED BY-PASS
CHANNEL
PLAN AND PROFILE
SHEET

SHEET NO.
16

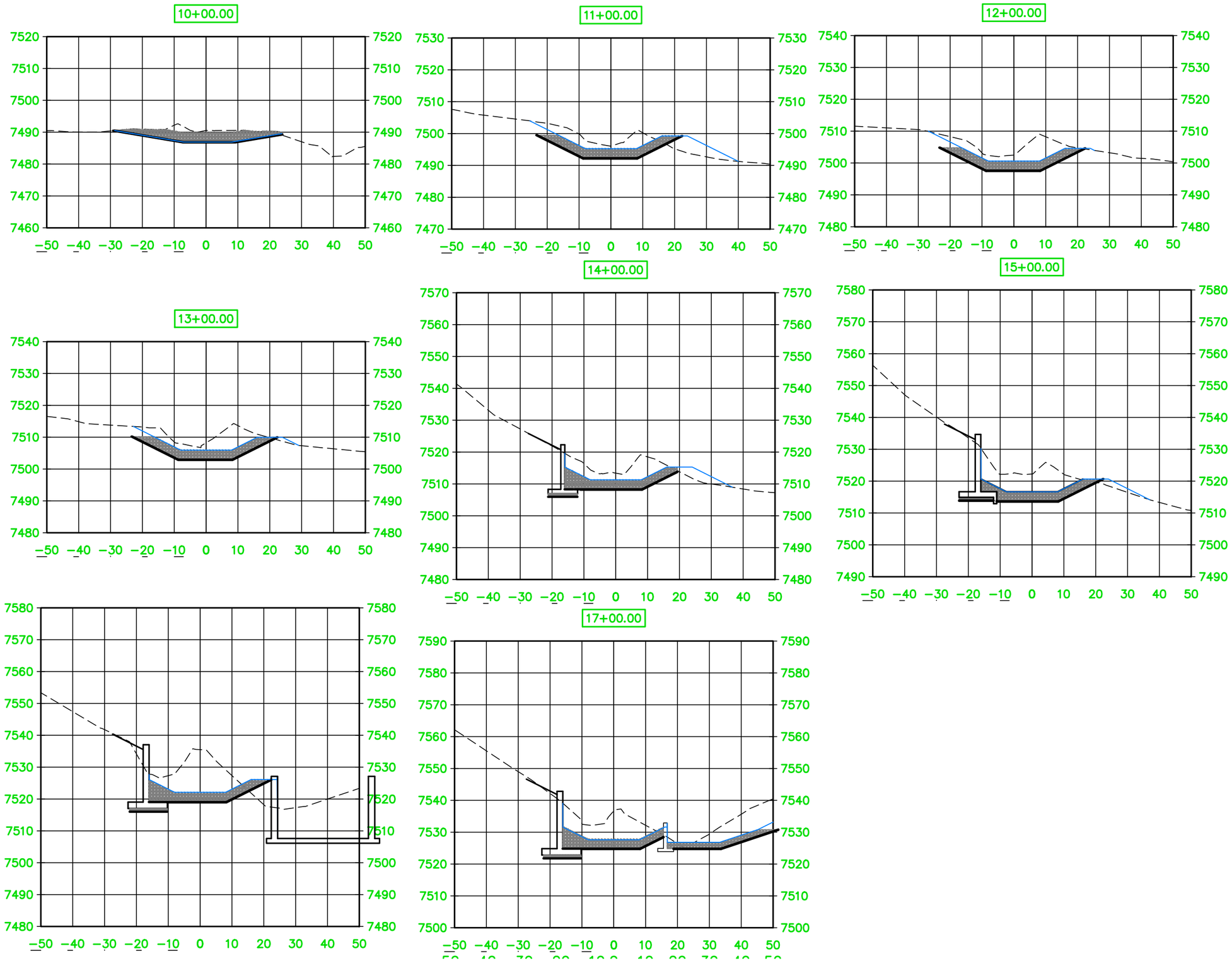

DESIGNED	HRT	3-19	CHECKED MDJ 3-19
DRAWN	DMF	3-19	CHECKED MDJ 3-19
SURVEYED	BHT	3-19	CHECKED LMS 3-19
R.O.W.			CHECKED

PROJECT FILE
TrailMtnEmergency2019\Emery County Trail Mountain Emergency Protection\ENGR\DRAWINGS\Sheets\Rilda

THIS DRAWING IS TO BE USED FOR THIS PROJECT AND THIS PROJECT ONLY UNLESS AUTHORIZED BY THE PROJECT ENGINEER AT JOHANSEN & TUTTLE ENGINEERS INC.

REV.	DESCRIPTION	BY.	DATE

johansen & tuttle ENGINEERING INC.
P.O. BOX 487, CASTLE DALE, UTAH 84513 (435) 381-2523
FAX (435) 381-2522 email jt @ etv.net

TRAIL MOUNTAIN
EMERGENCY WATERSHED
PROTECTION PROJECT
RILDA CANYON NORTH
EMERY SPRINGS 2019

EMERY COUNTY

ARMORED BY-PASS
CHANNEL
CROSS-SECTIONS

SHEET NO.
17

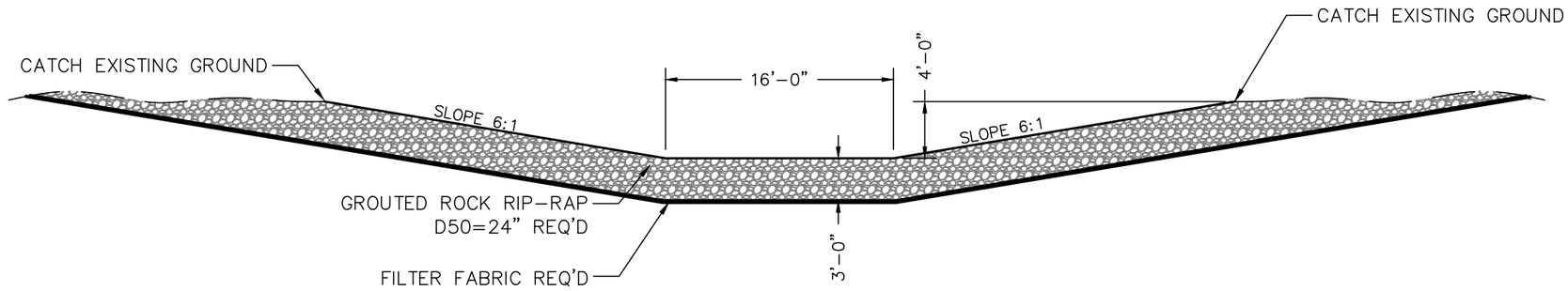

BY-PASS CHANNEL DETAIL

Sta: 9+96.41 to Sta: 10+27
SCALE: 1" = 10'-0"

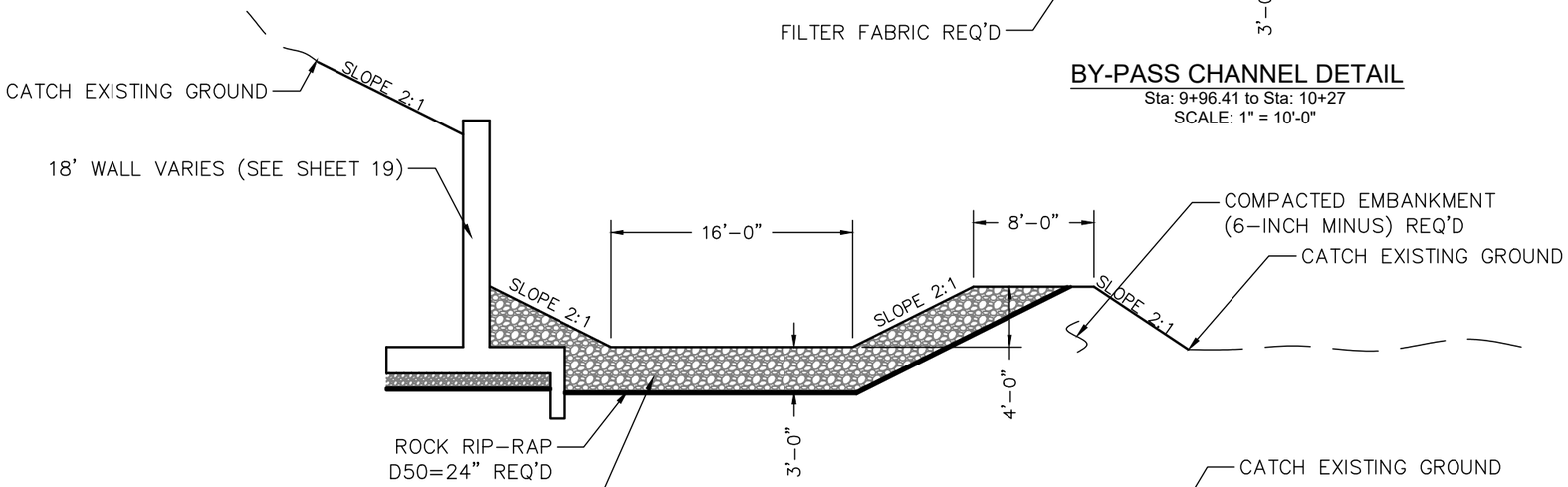

BY-PASS CHANNEL DETAIL

Sta: 14+05 to Sta: 15+30
SCALE: 1" = 10'-0"

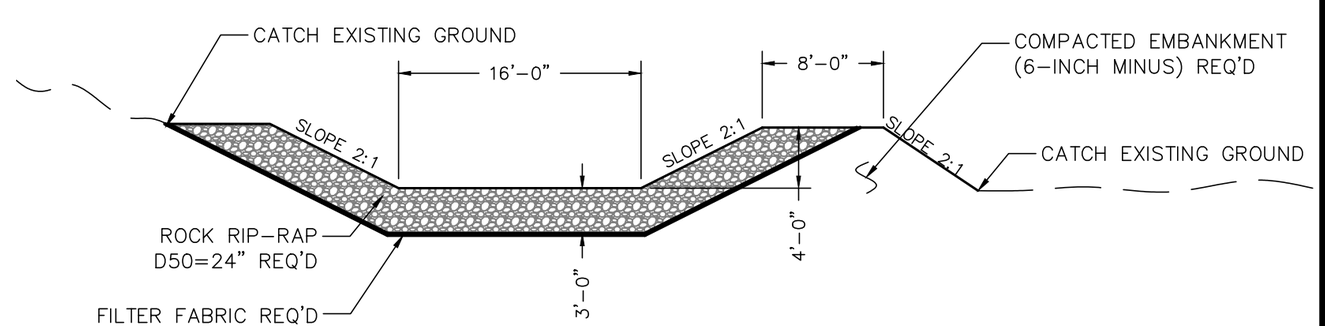

BY-PASS CHANNEL DETAIL

Sta: 10+27 to Sta: 13+38
SCALE: 1" = 10'-0"

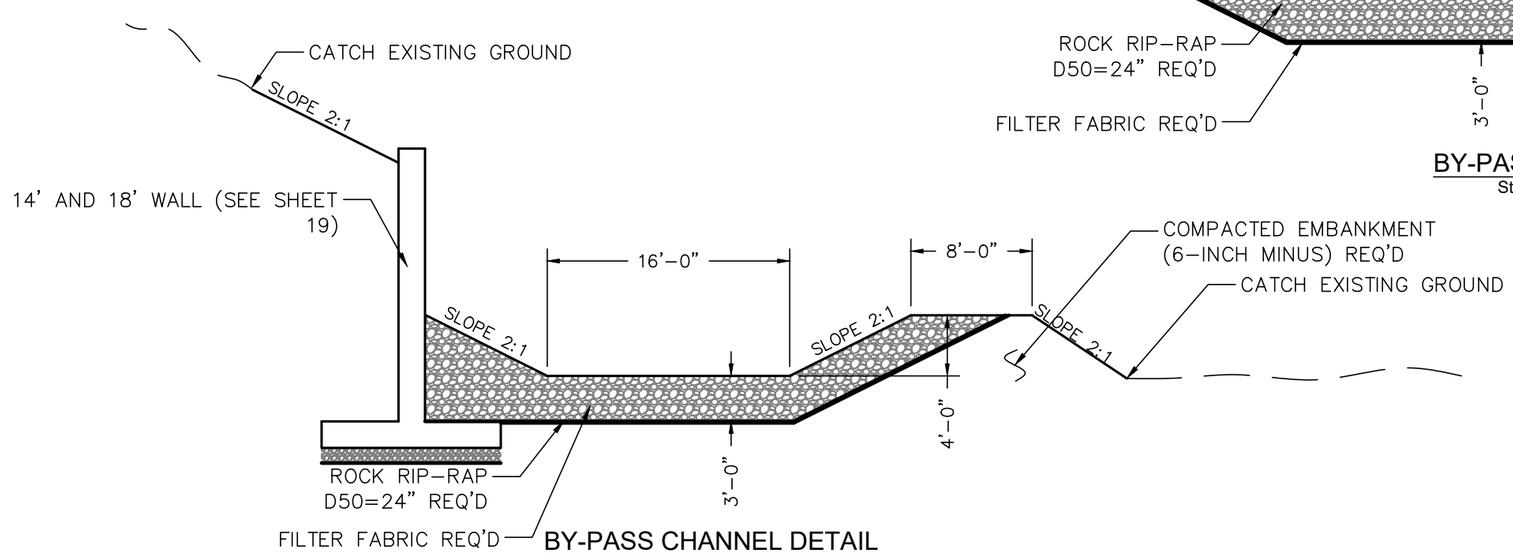

BY-PASS CHANNEL DETAIL

Sta: 13+28 to Sta: 14+05
Sta;15:30 to Sta: 17+44
SCALE: 1" = 10'-0"

DESIGNED	HRT	3-19	CHECKED	MDJ 3-19
DRAWN	DMF	3-19	CHECKED	MDJ 3-19
SURVEYED	BHT	3-19	CHECKED	LMS 3-19
R.O.W.			CHECKED	

PROJECT FILE
TrailMtnEmergency2019
Emergency Protection\ENGR\DRAWINGS\Sheets\Rilda

THIS DRAWING IS TO BE USED FOR THIS PROJECT AND THIS PROJECT ONLY UNLESS AUTHORIZED BY THE PROJECT ENGINEER AT JOHANSEN & TUTTLE ENGINEERS, INC.

REV.	DESCRIPTION	BY	DATE
1	CHANGED ROCK PER NRCS.	DMF	10-10-19

johansen & tuttle ENGINEERING INC.
P.O. BOX 487, CASTLE DALE, UTAH 84513 (435) 381-2523
FAX (435) 381-2522 email jt @ etv.net

TRAIL MOUNTAIN
EMERGENCY WATERSHED
PROTECTION PROJECT
RILDA CANYON NORTH
EMERY SPRINGS 2019

EMERY COUNTY

BY-PASS CHANNEL
TYPICAL SECTIONS

SHEET NO.
18

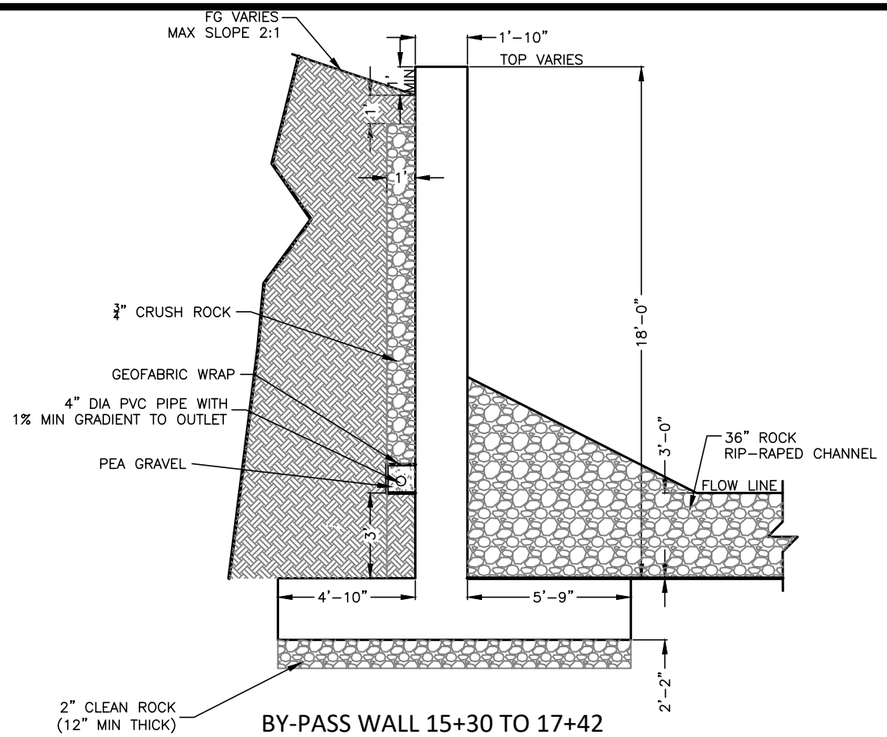

BY-PASS WALL 15+30 TO 17+42

SCALE: 3/16" = 1'-0"

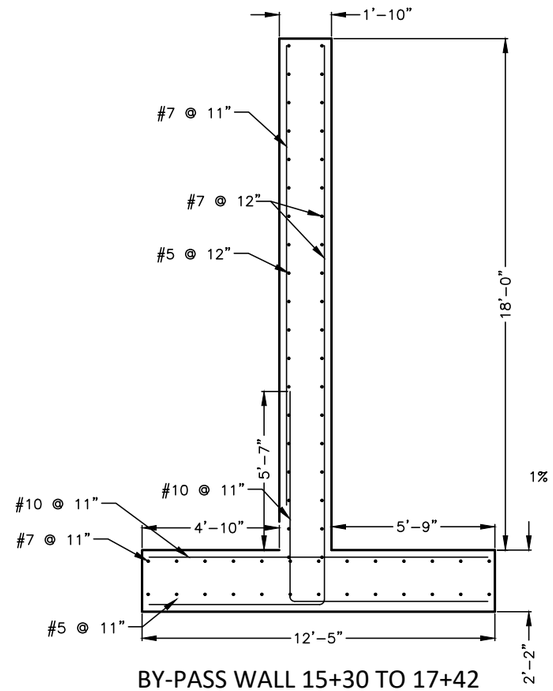

BY-PASS WALL 15+30 TO 17+42
REINFORCEMENT DETAIL

SCALE: 3/16" = 1'-0"

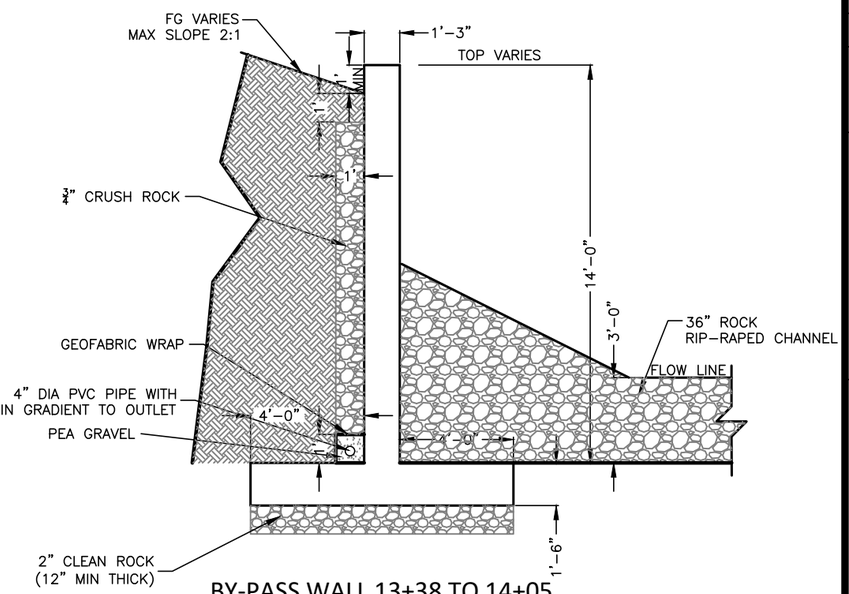

BY-PASS WALL 13+38 TO 14+05

SCALE: 3/16" = 1'-0"

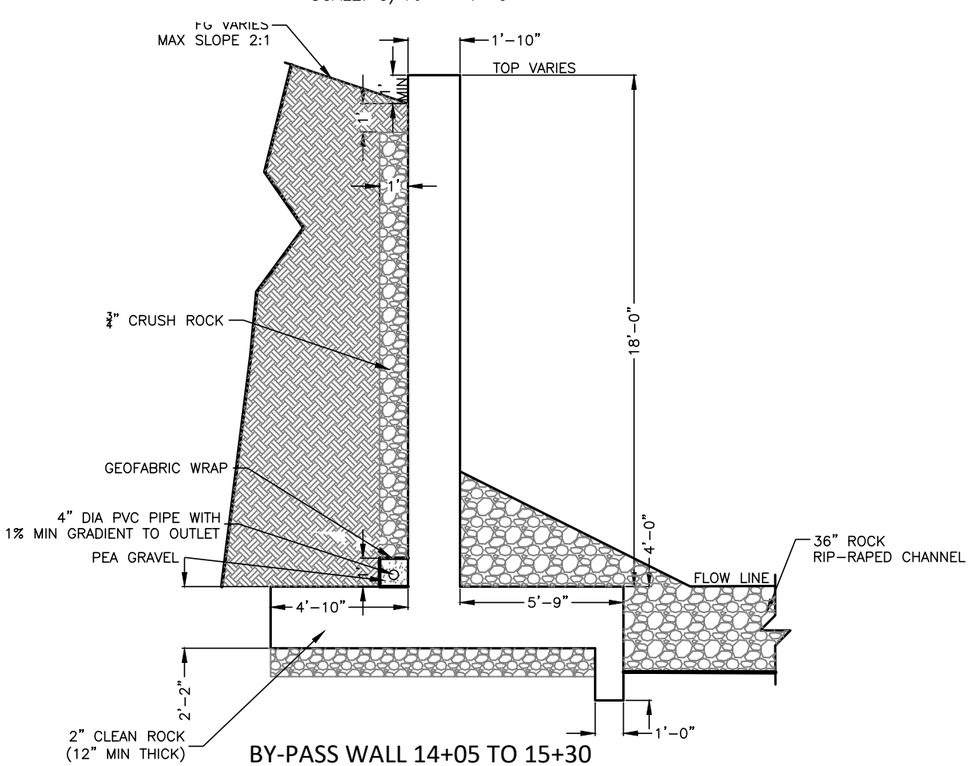

BY-PASS WALL 14+05 TO 15+30

SCALE: 3/16" = 1'-0"

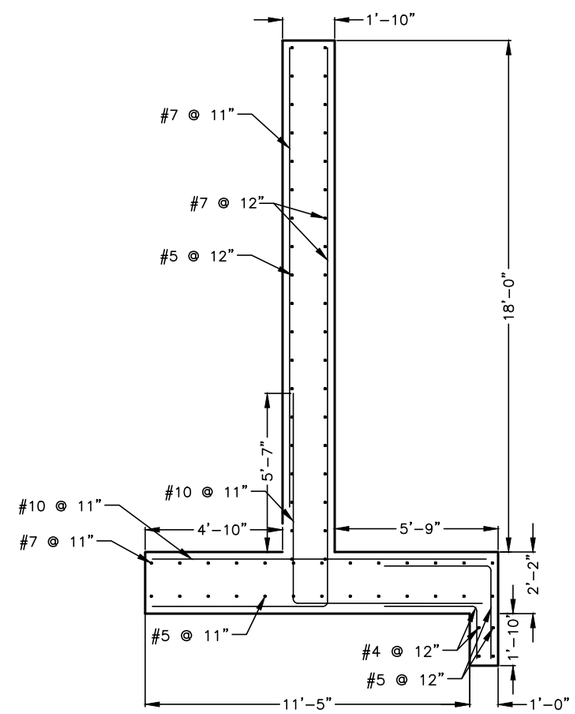

BY-PASS WALL 14+05 TO 15+30
REINFORCEMENT DETAIL

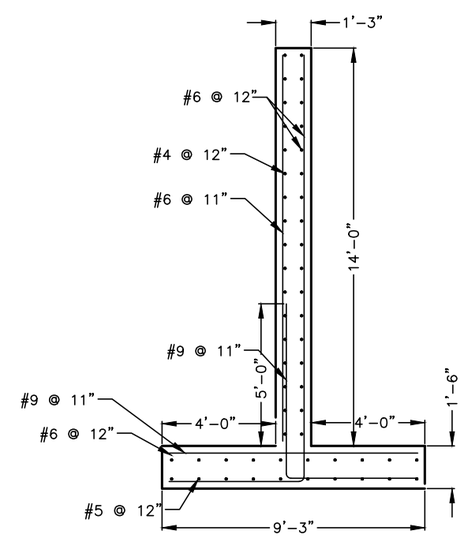

BY-PASS WALL 13+38 to 14+05
REINFORCEMENT DETAIL

SCALE: 3/16" = 1'-0"

THIS DRAWING IS TO BE USED FOR THIS PROJECT AND THIS PROJECT ONLY UNLESS AUTHORIZED BY THE PROJECT ENGINEER AT JOHANSEN & TUTTLE ENGINEERS, INC.

DESIGNED	HRT	3-19	CHECKED	MDJ 3-19
DRAWN	DMF	3-19	CHECKED	MDJ 3-19
SURVEYED	BHT	3-19	CHECKED	LMS 3-19
R.O.W.			CHECKED	

PROJECT FILE
T:\Projects\2019\Emery County Trail Mountain Emergency Protection\ENGR\DRAWINGS\Sheets\Rilda

REV.	DESCRIPTION	BY.	DATE
1	CHANGED ROCK PER NRCS.	DMF	10-10-19

johansen & tuttle ENGINEERING INC.
P.O. BOX 487, CASTLE DALE, UTAH 84513 (435) 381-2523
FAX (435) 381-2522 email jt @ etv.net

TRAIL MOUNTAIN
EMERGENCY WATERSHED
PROTECTION PROJECT
RILDA CANYON NORTH
EMERY SPRINGS 2019

EMERY COUNTY

BY-PASS WALL
DETAIL SHEET

SHEET NO.
19

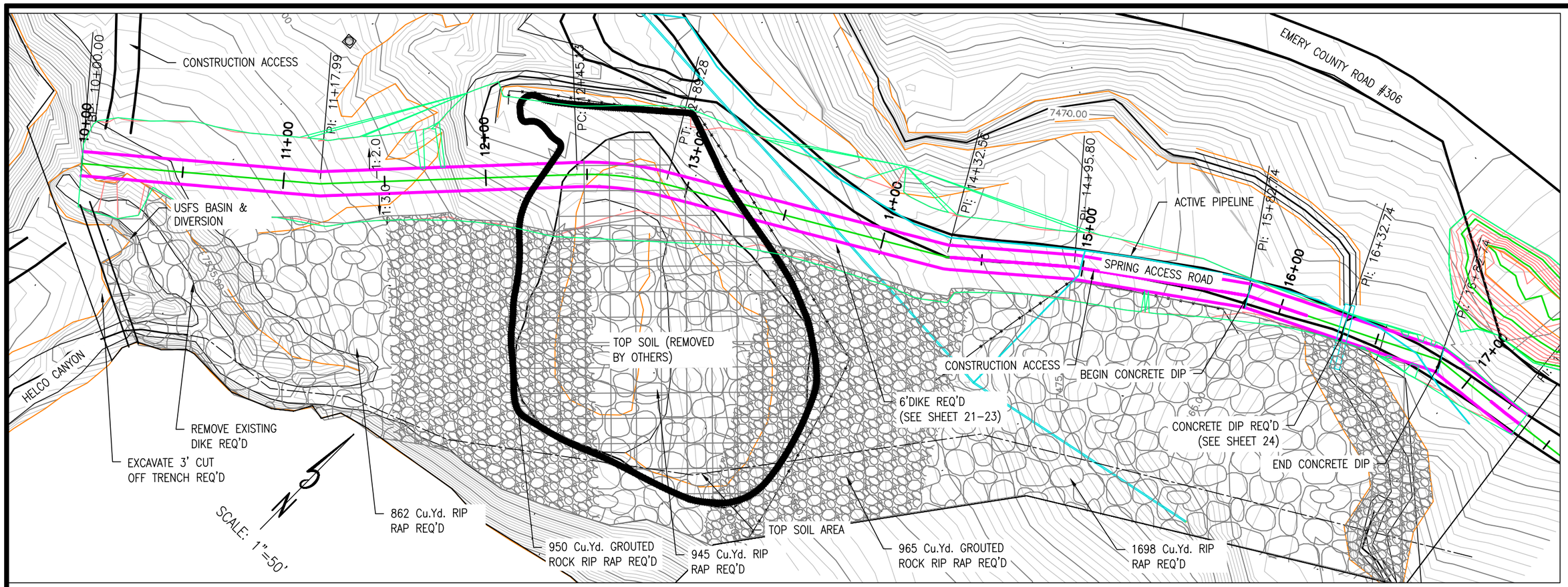

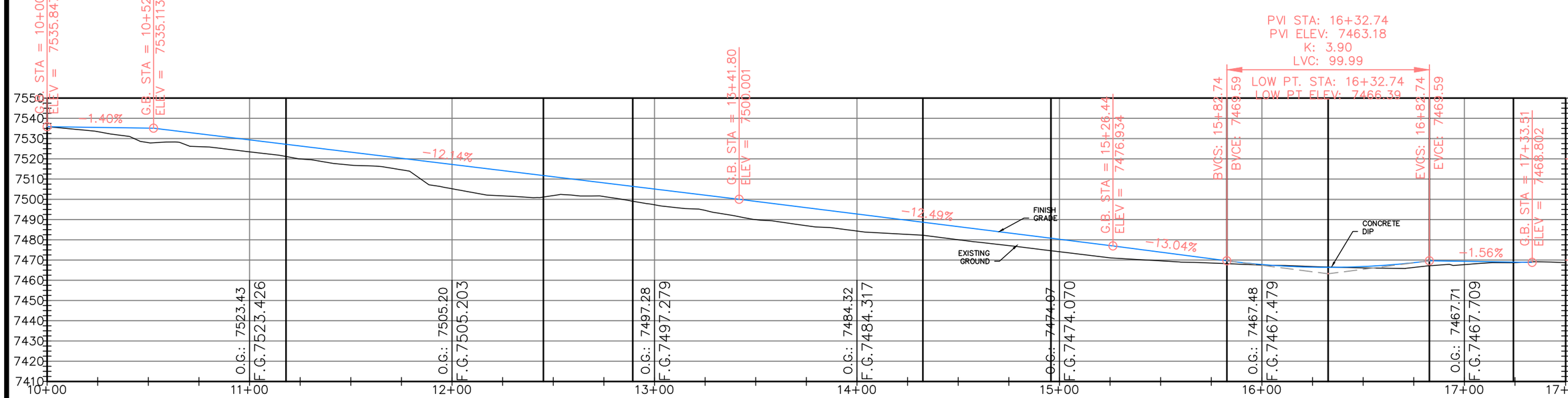

THIS DRAWING IS TO BE USED FOR THIS PROJECT AND THIS PROJECT ONLY UNLESS AUTHORIZED BY THE PROJECT ENGINEER AT JOHANSEN & TUTTLE ENGINEERS INC.

DESIGNED	HRT	3-19	CHECKED MDJ 3-19
DRAWN	DMF	3-19	CHECKED MDJ 3-19
SURVEYED	BHT	3-19	CHECKED LMS 3-19
R.O.W.			CHECKED

PROJECT FILE
J:\2019\Emery County Trail Mountain Emergency Protection\ENGR\DRAWINGS\Sheets\Rilda

REV.	DESCRIPTION	BY.	DATE

johansen & tuttle ENGINEERING INC.
P.O. BOX 487, CASTLE DALE, UTAH 84513 (435) 381-2523
FAX (435) 381-2522 email jt @ etv.net

TRAIL MOUNTAIN
EMERGENCY WATERSHED
PROTECTION PROJECT
RILDA CANYON NORTH
EMERY SPRINGS 2019

EMERY COUNTY

DIKE & RIP RAP
PLAN AND PROFILE
SHEET

SHEET NO.
20

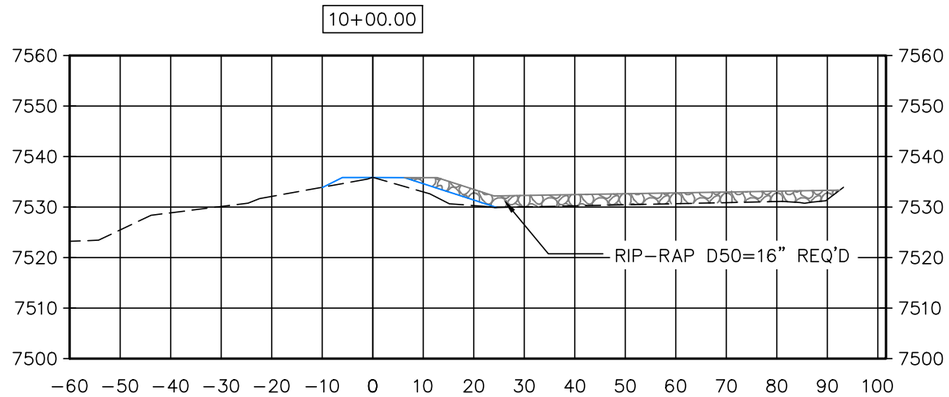

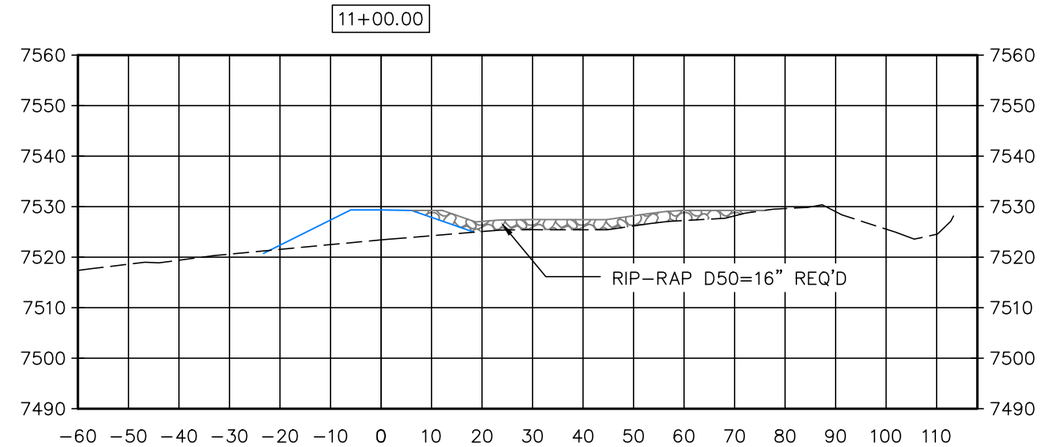

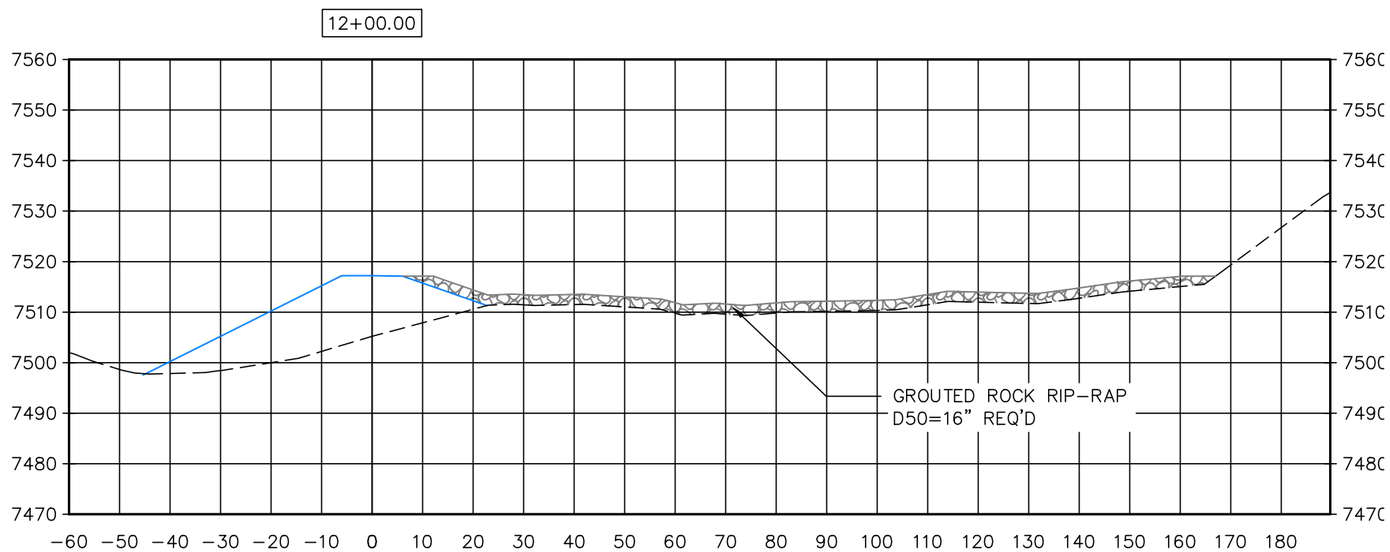

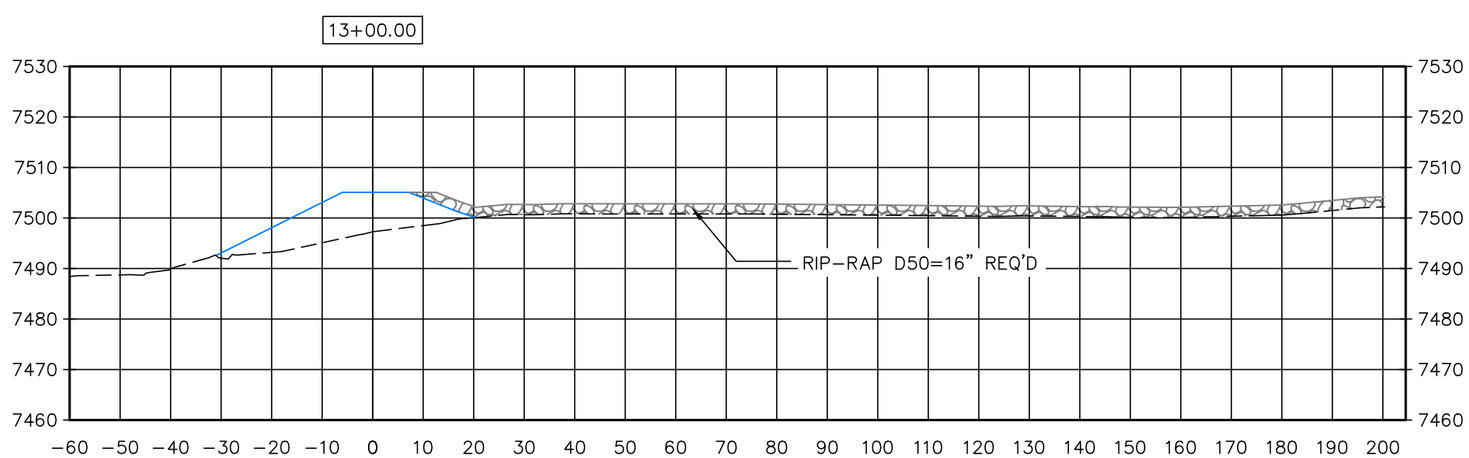

DESIGNED	HRT	3-19	CHECKED MDJ 3-19
DRAWN	DMF	3-19	CHECKED MDJ 3-19
SURVEYED	BHT	3-19	CHECKED LMS 3-19
R.O.W.			CHECKED

PROJECT FILE
T:\Projects\2019\Trail Mountain Emergency Protection\ENGR\DRAWINGS\Sheets\Rilda

THIS DRAWING IS TO BE USED FOR THIS PROJECT AND THIS PROJECT ONLY UNLESS AUTHORIZED BY THE PROJECT ENGINEER AT JOHANSEN & TUTTLE ENGINEERS INC.

REV.	DESCRIPTION	BY.	DATE

Johansen & Tuttle ENGINEERING INC.
P.O. BOX 487, CASTLE DALE, UTAH 84513 (435) 381-2523
FAX (435) 381-2522 email jt @ etv.net

TRAIL MOUNTAIN
EMERGENCY WATERSHED
PROTECTION PROJECT
RILDA CANYON NORTH
EMERY SPRINGS 2019

EMERY COUNTY

DIKE AND RIP-RAP
CROSS-SECTIONS

SHEET NO.
21

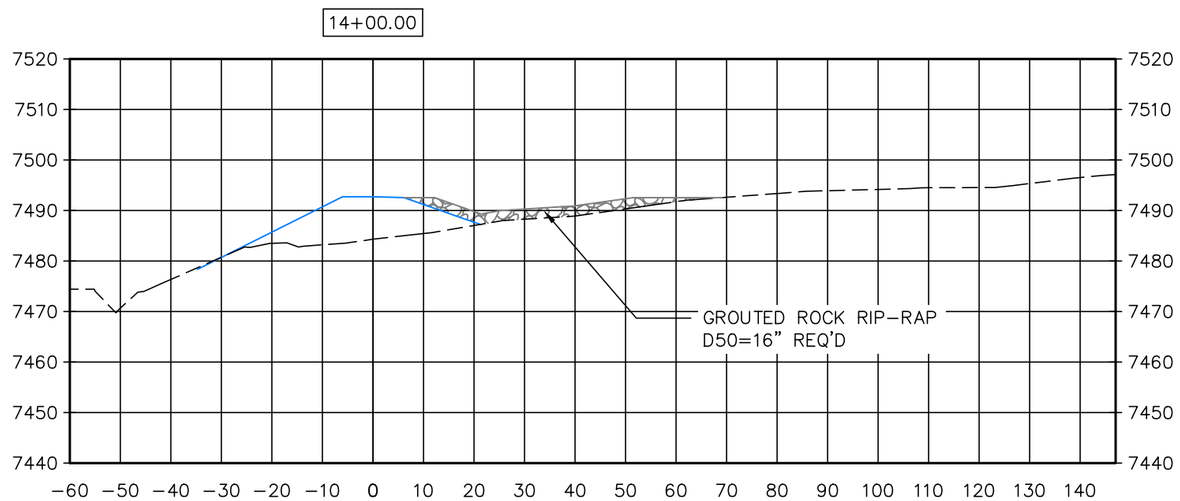

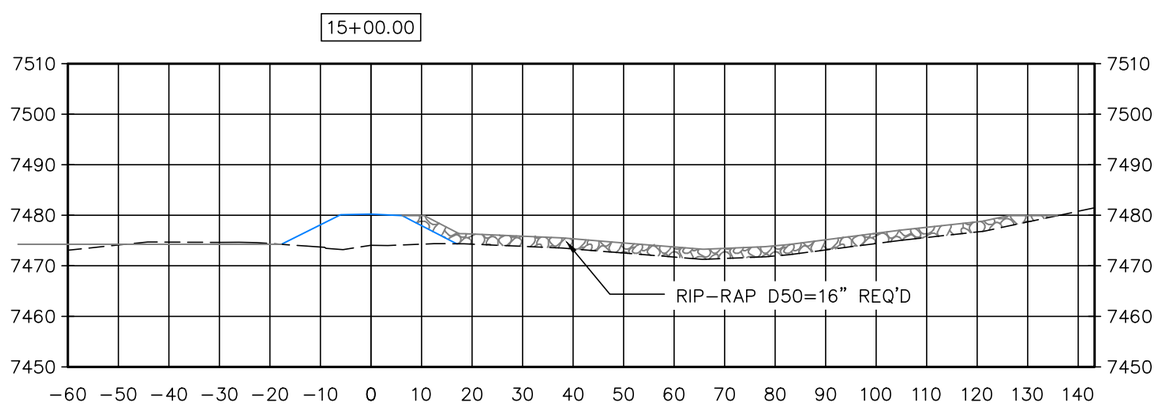

DESIGNED	HRT	3-19	CHECKED MDJ 3-19
DRAWN	DMF	3-19	CHECKED MDJ 3-19
SURVEYED	BHT	3-19	CHECKED LMS 3-19
R.O.W.			CHECKED

PROJECT FILE
TS-Sheets-2019
Emergency Protection\ENGR\DRAWINGS\Sheets\Rilda

THIS DRAWING IS TO BE USED FOR THIS PROJECT AND THIS PROJECT ONLY UNLESS AUTHORIZED BY THE PROJECT ENGINEER AT JOHANSEN & TUTTLE ENGINEERS INC.

REV.	DESCRIPTION	BY.	DATE

johansen & tuttle ENGINEERING INC.
P.O. BOX 487, CASTLE DALE, UTAH 84513 (435) 381-2523
FAX (435) 381-2522 email jt @ etv.net

TRAIL MOUNTAIN
EMERGENCY WATERSHED
PROTECTION PROJECT
RILDA CANYON NORTH
EMERY SPRINGS 2019

EMERY COUNTY

DIKE AND RIP-RAP
CHANNEL
CROSS-SECTIONS

SHEET NO.
22

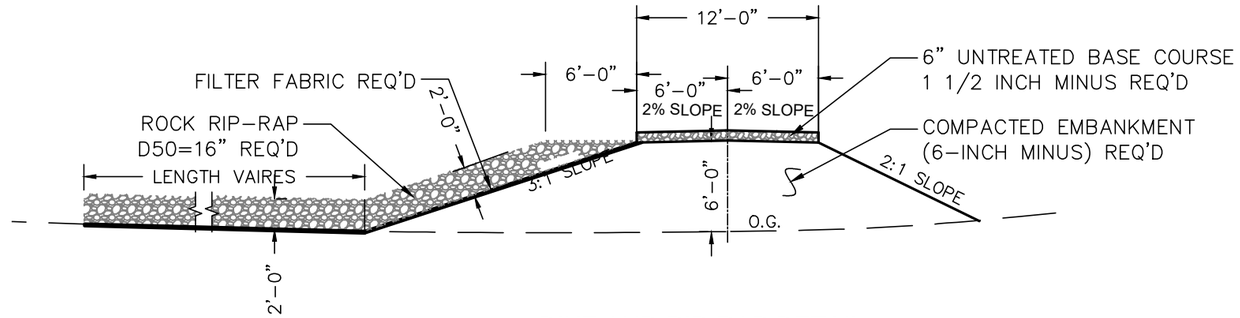

DIKE AND RIP-RAP DETAIL

Sta: 10+05 to Sta: 15+82
SCALE: 1" = 10'-0"

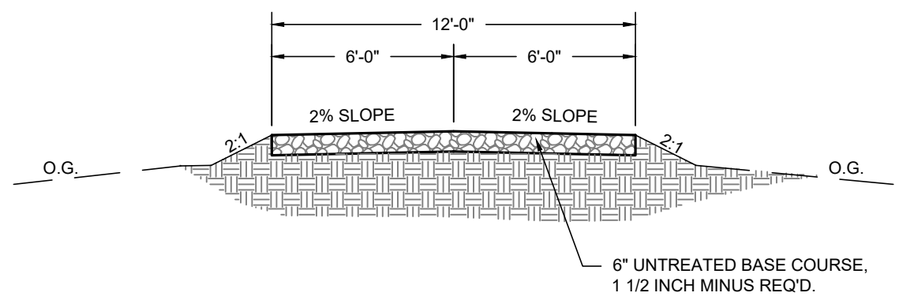

ROADWAY SECTION

SCALE: 1" = 5'-0"

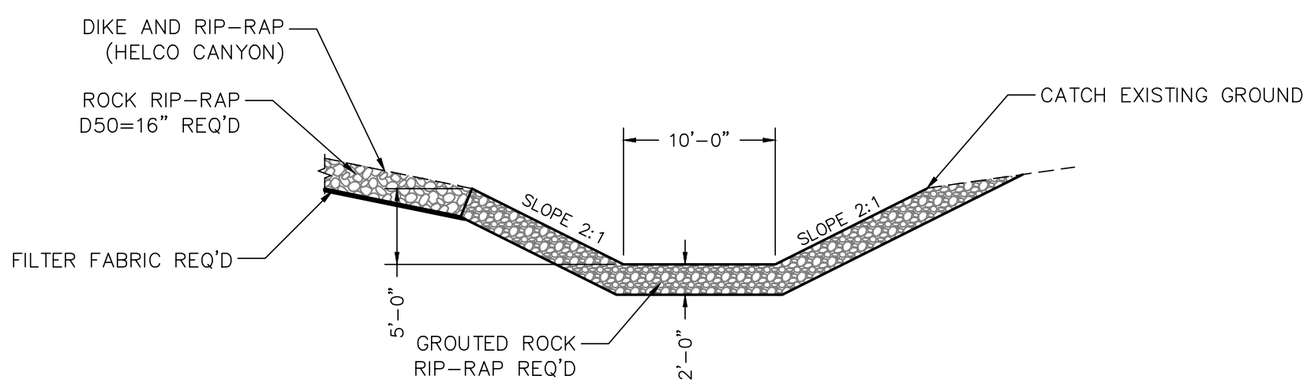

GROUTED ROCK RIP-RAP DITCH

SCALE: 1" = 10'-0"

THIS DRAWING IS TO BE USED FOR THIS PROJECT AND THIS PROJECT ONLY UNLESS AUTHORIZED BY THE PROJECT ENGINEER AT JOHANSEN & TUTTLE ENGINEERS, INC.

DESIGNED	HRT	3-19	CHECKED MDJ 3-19
DRAWN	DMF	3-19	CHECKED MDJ 3-19
SURVEYED	BHT	3-19	CHECKED LMS 3-19
R.O.W.			CHECKED

PROJECT FILE:
TR-Rilda-2019
Emergency Protection\ENGR\DRAWINGS\Sheets\Rilda

REV.	DESCRIPTION	BY.	DATE

johansen & tuttle ENGINEERING INC.
P.O. BOX 487, CASTLE DALE, UTAH 84513 (435) 381-2523
FAX (435) 381-2522 email jt @ etv.net

TRAIL MOUNTAIN
EMERGENCY WATERSHED
PROTECTION PROJECT
RILDA CANYON NORTH
EMERY SPRINGS 2019

EMERY COUNTY

TYPICAL SECTIONS

SHEET NO.
23

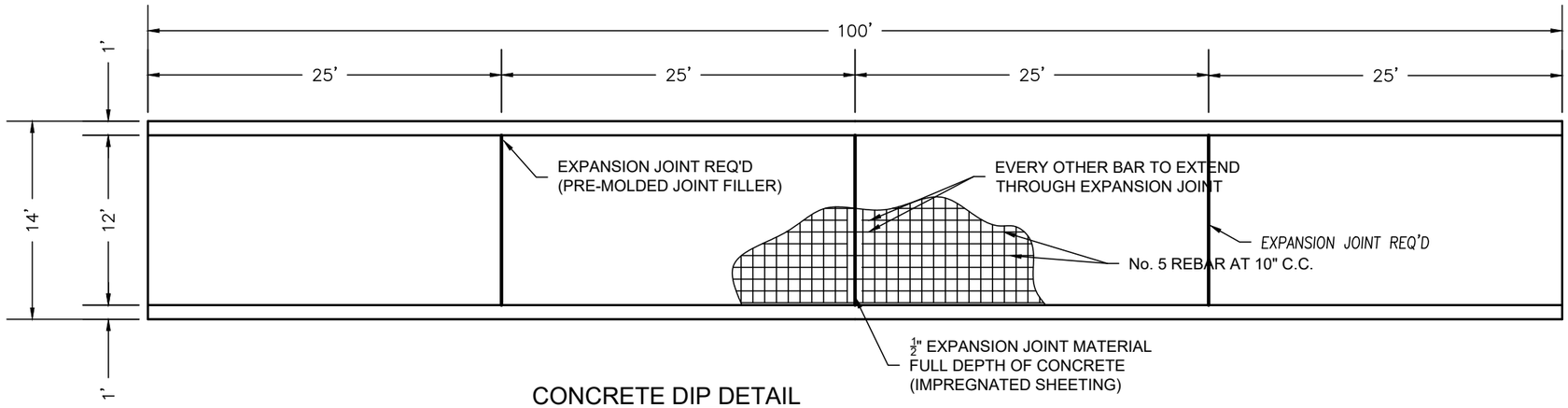

CONCRETE DIP DETAIL

PLAN VIEW
SCALE: 1" = 10'-0"

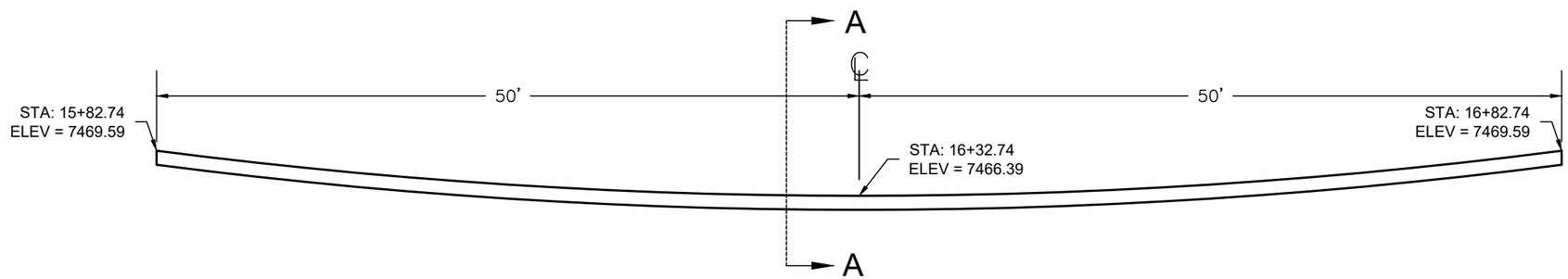

CONCRETE DIP DETAIL

ELEVATION VIEW
SCALE: 1" = 10'-0"

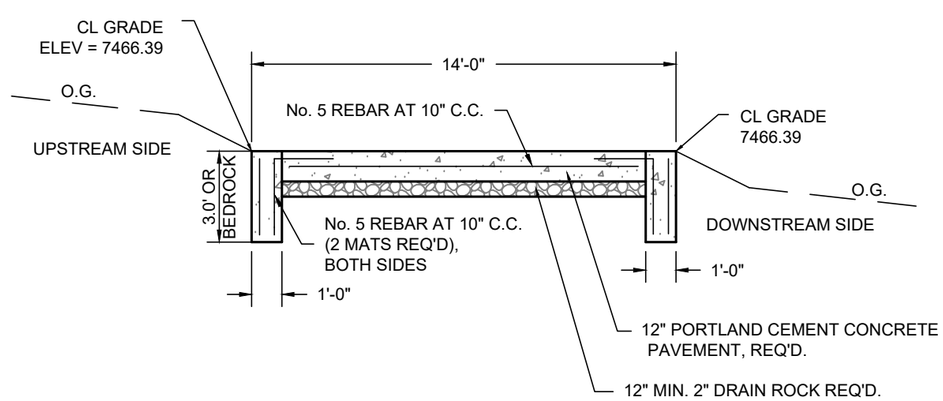

CONCRETE DIP SECTION

SECTION A-A
SCALE: 1" = 5'-0"

THIS DRAWING IS TO BE USED FOR THIS PROJECT AND THIS PROJECT ONLY UNLESS AUTHORIZED BY THE PROJECT ENGINEER AT JOHANSEN & TUTTLE ENGINEERS, INC.

DESIGNED	HRT	3-19	CHECKED	MDJ 3-19
DRAWN	DMF	3-19	CHECKED	MDJ 3-19
SURVEYED	BHT	3-19	CHECKED	LMS 3-19
R.O.W.			CHECKED	

PROJECT FILE
TS-Rilda-Canyon-2019
Emergency Protection\ENGR\DRAWINGS\Sheets\Rilda

REV.	DESCRIPTION	BY	DATE

Johansen & Tuttle ENGINEERING INC.
P.O. BOX 487, CASTLE DALE, UTAH 84513 (435) 381-2523
FAX (435) 381-2522 email jt @ etv.net

TRAIL MOUNTAIN
EMERGENCY WATERSHED
PROTECTION PROJECT
RILDA CANYON NORTH
EMERY SPRINGS 2019

EMERY COUNTY

CONCRETE DIP
DETAIL

SHEET NO.
24

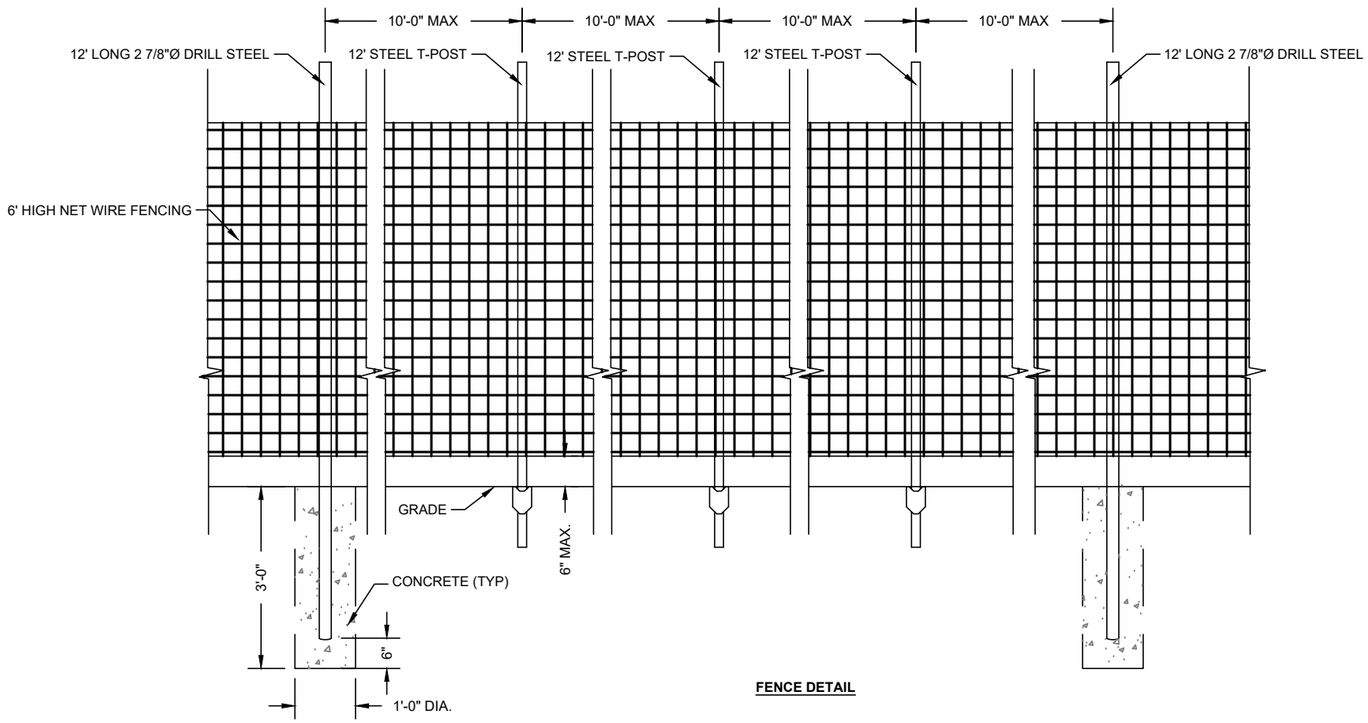

FENCE DETAIL

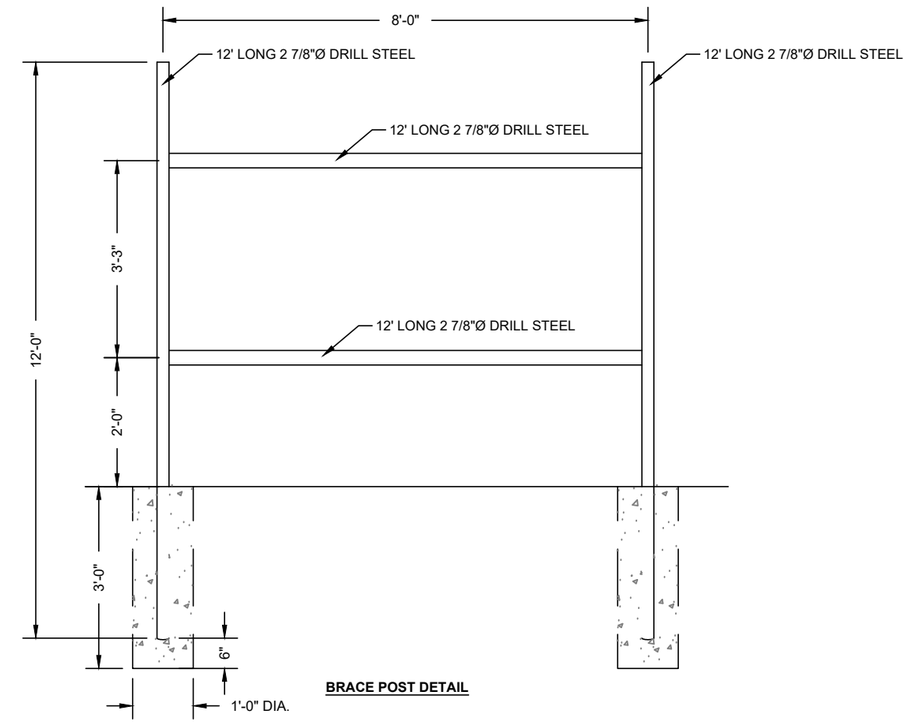

BRACE POST DETAIL

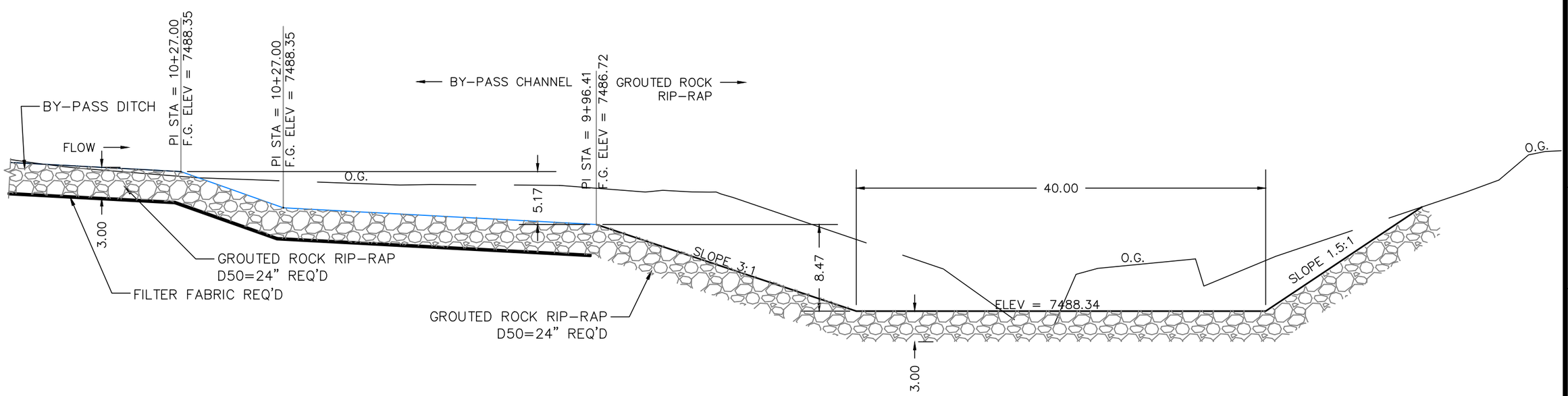

ROCK CHUTE

SCALE: 1" = 10'-0"

THIS DRAWING IS TO BE USED FOR THIS PROJECT AND THIS PROJECT ONLY UNLESS AUTHORIZED BY THE PROJECT ENGINEER AT JOHANSEN & TUTTLE ENGINEERS, INC.

DESIGNED	HRT	3-19	CHECKED MDJ 3-19
DRAWN	DMF	3-19	CHECKED MDJ 3-19
SURVEYED	BHT	3-19	CHECKED LMS 3-19
R.O.W.			CHECKED

PROJECT FILE
TS-Sheet-2019
Emergency Protection\ENGR\DRAWINGS\Sheets\Rilda

REV.	DESCRIPTION	BY.	DATE
1	CHANGED ROCK PER NRCS.	DMF	10-10-19

johansen & tuttle ENGINEERING INC.
P.O. BOX 487, CASTLE DALE, UTAH 84513 (435) 381-2523
FAX (435) 381-2522 email jt @ etv.net

TRAIL MOUNTAIN
EMERGENCY WATERSHED
PROTECTION PROJECT
RILDA CANYON NORTH
EMERY SPRINGS 2019

EMERY COUNTY

TYPICAL SECTIONS

SHEET NO.
25

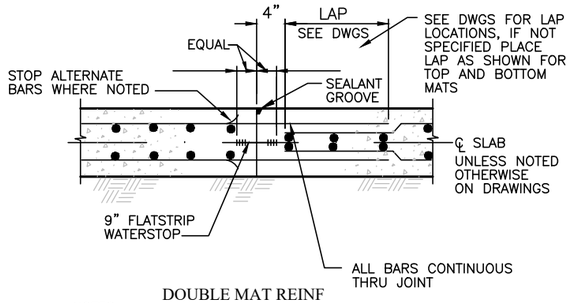

DOUBLE MAT REINF

T	A
6"	2"
7"	2 1/2"
8"	2 1/2"

NOTES:

1. WATER STOPS AND SEALANT GROOVES TO BE PROVIDED IN ALL WATER RETAINING SLABS, SEE DRAWINGS, FOR OTHER LOCATIONS WHERE THEY MAY BE REQUIRED.
2. DIMENSIONS INDICATED ON DETAIL CONTROL MINIMUM COVER. FOR THIN SLABS, THE BOTTOM COVER MAY BE LESS THAN 3".
3. ALTERNATING BARS WILL EXTEND THROUGH JOINT
4. STAGGER SPLICES UNLESS NOTED OTHERWISE.
5. CONTRACTION AND EXPANSION JOINTS (SEE SHEET 3 NOTE 10)

SLAB ON GRADE CONTRACTION JOINTS

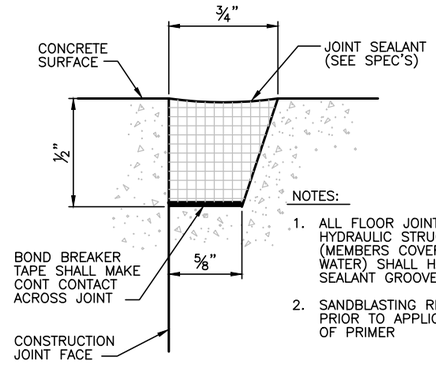

NOTES:

1. ALL FLOOR JOINTS OF HYDRAULIC STRUCTURES (MEMBERS COVERED WITH WATER) SHALL HAVE A SEALANT GROOVE
2. SANDBLASTING REQUIRED PRIOR TO APPLICATION OF PRIMER

SEALANT GROOVE

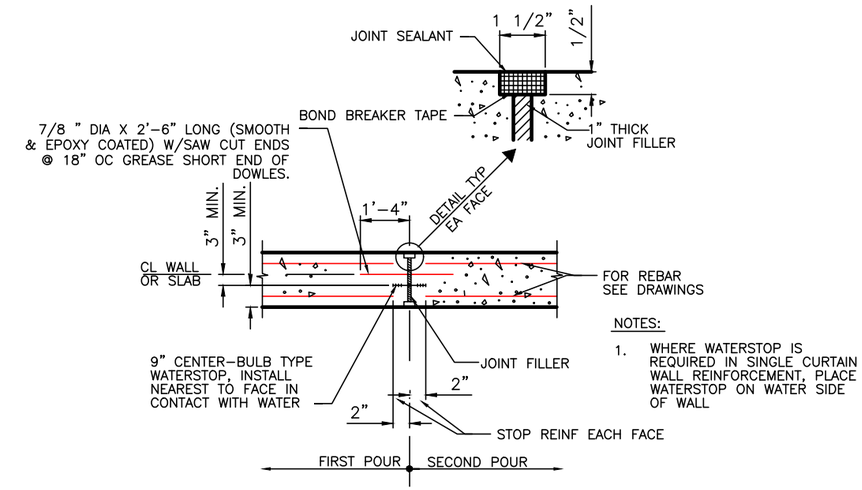

NOTES:

1. WHERE WATERSTOP IS REQUIRED IN SINGLE CURTAIN WALL REINFORCEMENT, PLACE WATERSTOP ON WATER SIDE OF WALL

EXPANSION JOINT

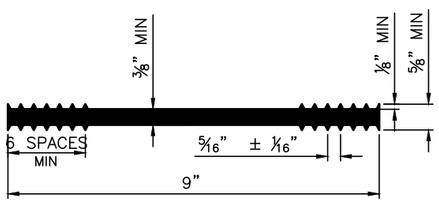

9" FLATSTRIP WATERSTOP

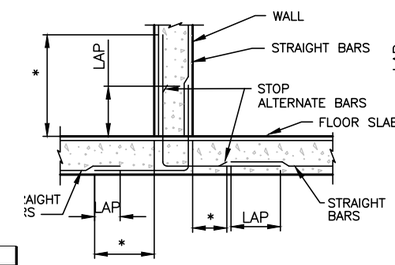

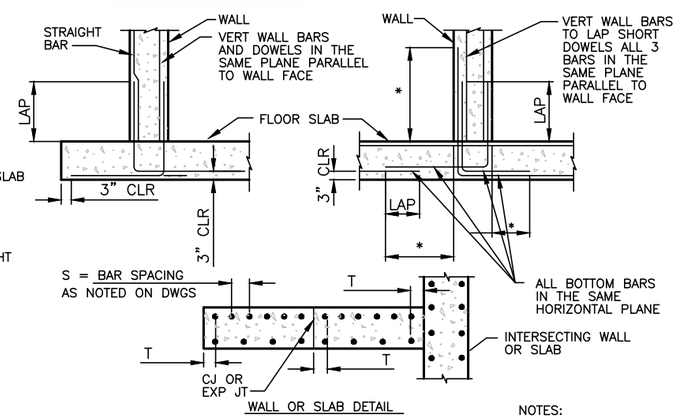

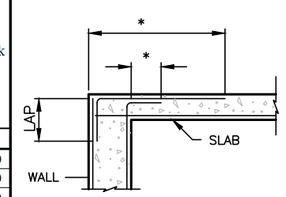

NOTES:
(*) WHEN BAR HOOK IS NOT SPECIFIED PROVIDE STD 90° BAR HOOK AS PER DETAIL S-15

T=S/2 OR 4" WHICHEVER IS LESS (TYP)

STANDARD FOR REINFORCEMENT BAR DETAILING

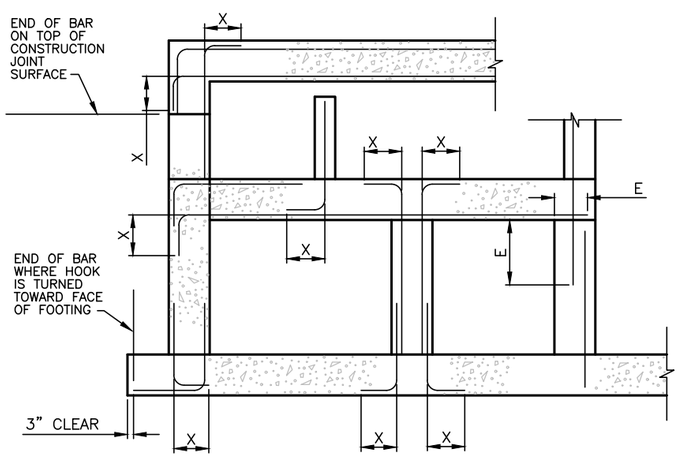

SECTION

	Based on fy=60,000 and f'c=4,500 psi						
Bar Size	Development Length E Tension	Development Length E Tension	Development Length E Compression	Development Length E Compression	Hooked Development	Hooked Development	Hook X
		Epoxy		Epoxy		Epoxy	
4	17.9	21.47	8.94	10.73	6.26	7.51	6.00
5	22.4	26.83	11.18	13.42	7.83	9.39	7.50
6	26.8	32.20	13.42	16.10	9.39	11.27	9.00
7	39.1	46.96	15.65	18.78	10.96	13.15	10.50
8	44.7	53.67	17.89	21.47	12.52	15.03	12.00
9	50.3	60.37	20.12	24.15	14.09	16.90	13.50
10	55.9	67.08	22.36	26.83	15.65	18.78	15.00
11	61.5	73.79	24.60	29.52	17.22	20.66	16.50

NOTES:

1. USE LAP LENGTHS AS DETERMINED FROM THESE TABLES UNLESS SHOWN OTHERWISE
2. THE TABLES SHOWN ARE FOR f'c=4500psi, fy=60,000psi, 2" MIN CONCRETE COVER AND 3" MIN BAR SPACING
3. ALL LENGTHS HAVE BEEN ADJUSTED FOR EPOXY COATED REINFORCING
4. WHEN BARS OF DIFFERENT SIZES ARE LAP SPLICED, LAP LENGTH SHALL BE THE LARGER OF:

   EMBEDMENT LENGTH OF LARGER BAR
   LAP LENGTH OF SMALLER BAR
5. ALL DOWEL BARS SHALL EXTEND AN EMBEDMENT LENGTH E INTO ANOTHER MEMBER OR ACROSS A CONSTRUCTION JOINT UNLESS SHOWN TO SPLICE WITH OTHER BARS OR TO EXTEND TO THE FAR FACE OF THE MEMBER AND END WITH A STANDARD HOOK
6. HOOKED DEVELOPMENT AND DEVELOPMENT LENGTHS CAN BE REDUCED BY AS REQUIRED/AS PROVIDED THIS REDUCTION WAS USED THROUGH THE DRAWINGS.
7. SPLICE CLASS A IN TENSION IS EQUAL TO 1.0Ld. SPLICE B IN TENSION IS EQUAL TO 1.3Ld.,

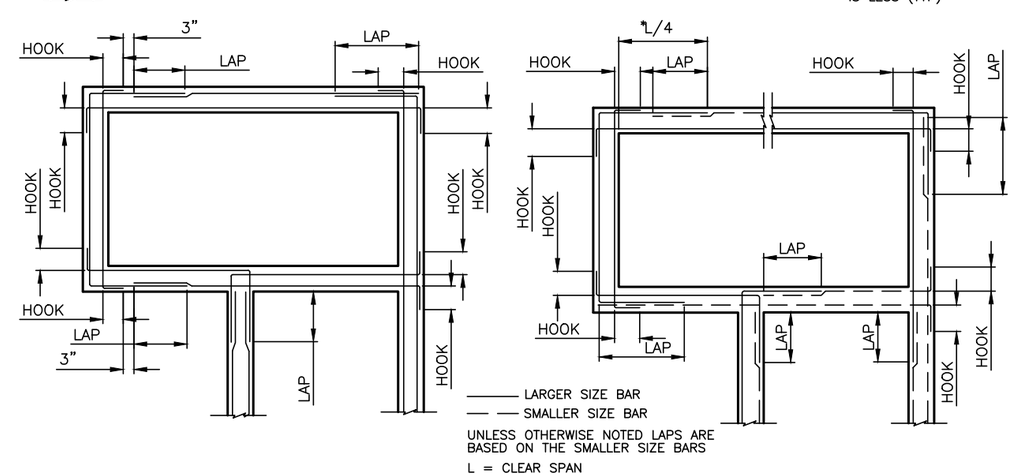

HORIZONTAL REINFORCEMENT AT WALL INTERSECTIONS

DESIGNED	HRT	3-19	CHECKED MDJ 3-19
DRAWN	DMF	3-19	CHECKED MDJ 3-19
SURVEYED	BHT	3-19	CHECKED LMS 3-19
R.O.W.			CHECKED

PROJECT FILE: T:\Projects 2018\Emery County Trail Mountain Emergency Protection\ENGR\DRAWINGS\Sheets\Rilda

THIS DRAWING IS TO BE USED FOR THIS PROJECT AND THIS PROJECT ONLY UNLESS AUTHORIZED BY THE PROJECT ENGINEER AT JOHANSEN & TUTTLE ENGINEERS, INC.

REV.	DESCRIPTION	BY:	DATE
1	CHANGED ROCK PER NRCS.	DMF	10-10-19

johansen & tuttle ENGINEERING INC.
P.O. BOX 487, CASTLE DALE, UTAH 84513 (435) 381-2523
FAX (435) 381-2522 email jt @ etv.net

TRAIL MOUNTAIN EMERGENCY WATERSHED PROTECTION PROJECT
RILDA CANYON NORTH
EMERY SPRINGS 2019

EMERY COUNTY

TYPICAL REBAR LAYOUT DETAIL

SHEET NO.
26

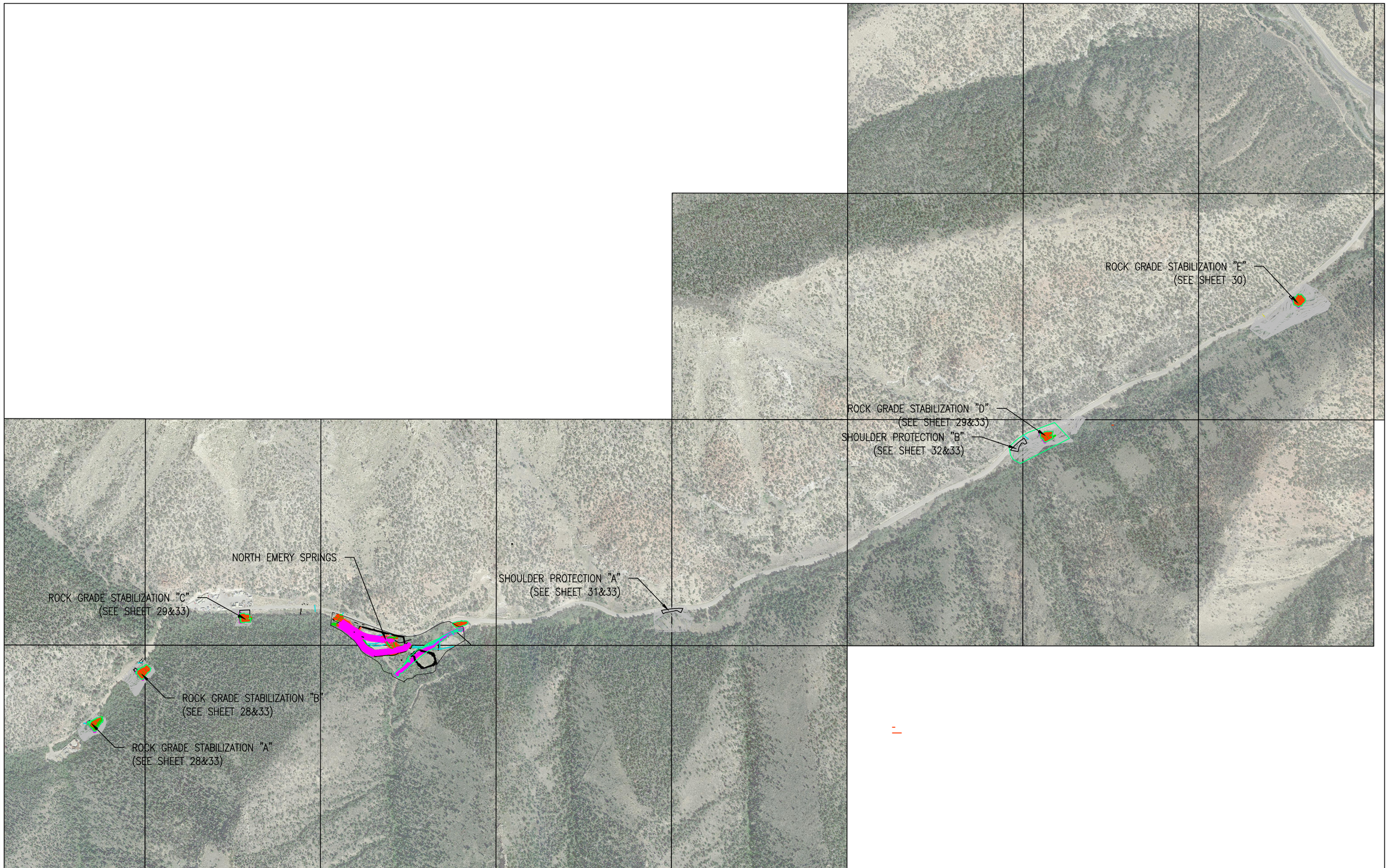

DESIGNED	HRT	3-19	CHECKED MDJ 3-19
DRAWN	DMF	3-19	CHECKED MDJ 3-19
SURVEYED	BHT	3-19	CHECKED LMS 3-19
R.O.W.			CHECKED

PROJECT FILE:
T:\Projects 2018\Emery County Trail Mountain Emergency Protection\EMER\JOHANSEN\Sheets\Rilda

THIS DRAWING IS TO BE USED FOR THIS PROJECT AND THIS PROJECT ONLY UNLESS AUTHORIZED BY THE PROJECT ENGINEER AT JOHANSEN & TUTTLE ENGINEERS, INC.

REV.	DESCRIPTION	BY:	DATE

johansen & tuttle ENGINEERING INC.
P.O. BOX 487, CASTLE DALE, UTAH 84513 (435) 381-2523
FAX (435) 381-2522 email jt@etv.net

TRAIL MOUNTAIN
EMERGENCY WATERSHED
PROTECTION PROJECT
RILDA CANYON NORTH
EMERY SPRINGS 2019

EMERY COUNTY

ROCK GRADE
STABILIZATION AND
SHOULDER
PROTECTION SITE PLAN

SHEET NO.
27

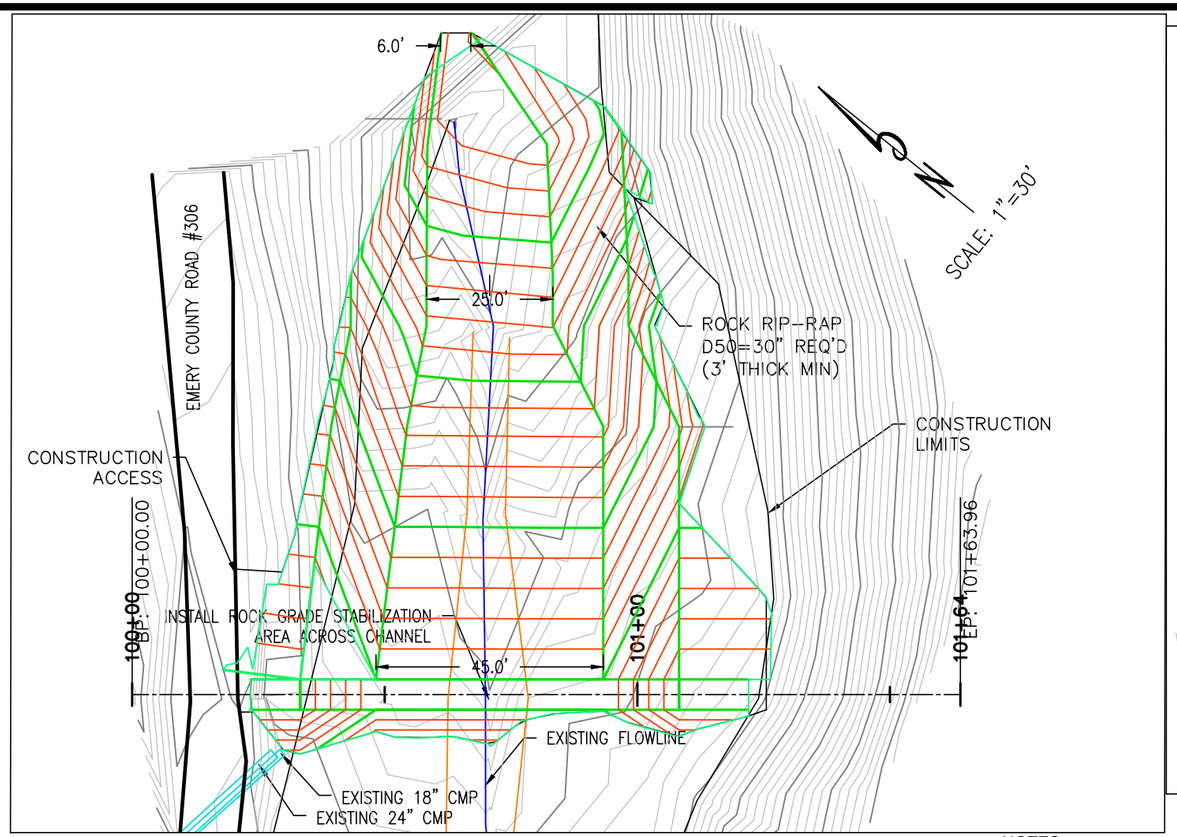

ROCK GRADE STABILIZATION "A"
ALIGNMENT SITE PLAN

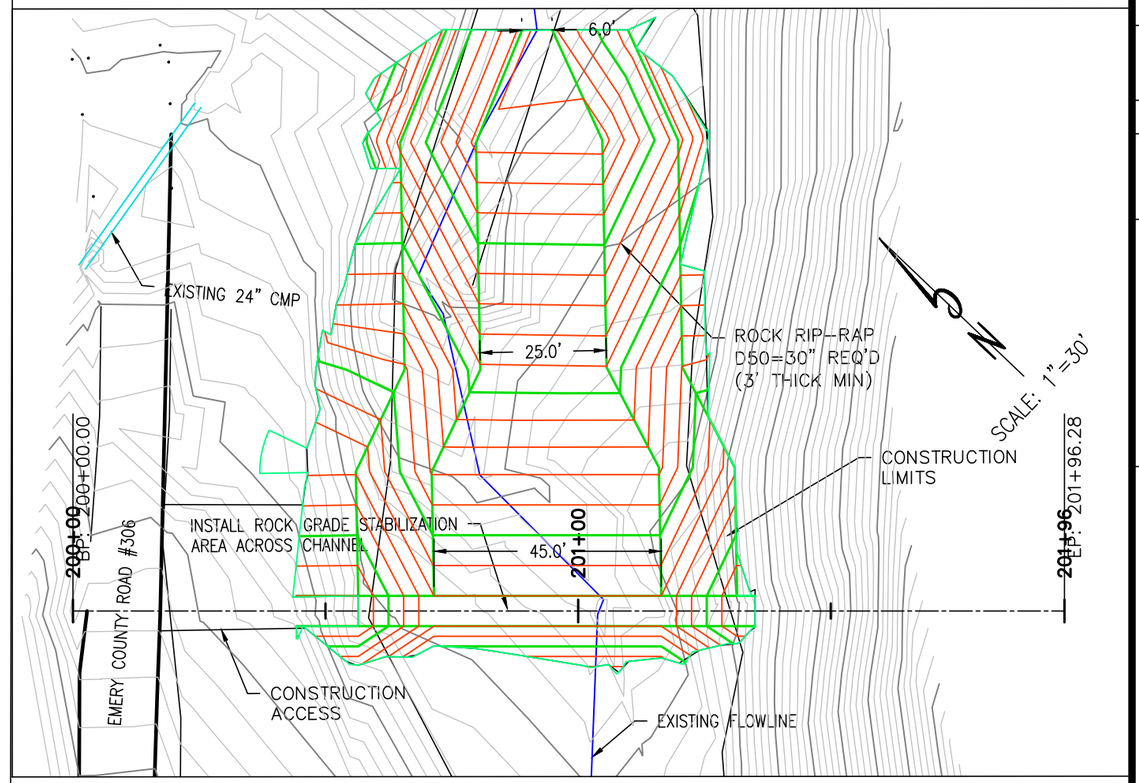

ROCK GRADE STABILIZATION "B"
ALIGNMENT SITE PLAN

NOTES:
1. HEIGHT OF ROCK SPILLWAY VARIES TO ENSURE A SPILLWAY WIDTH OF 45 FEET NECESSARY TO PASS 100 YEAR STORM FLOWS.
2. ABUTMENTS WILL HAVE A 5' FREEBOARD DEPTH ABOVE WEIR ELEVATION.

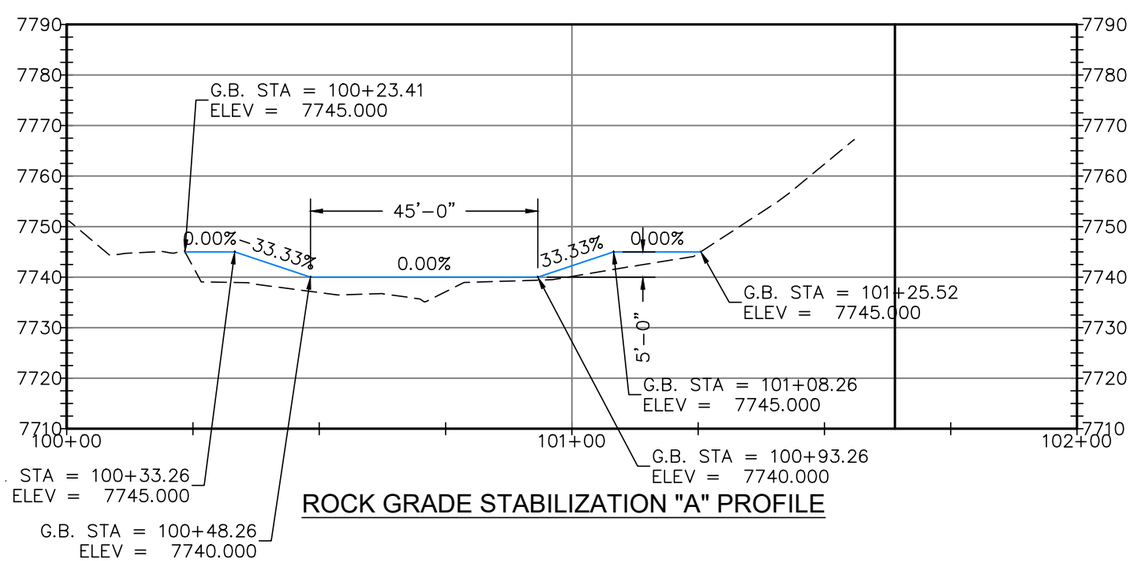

ROCK GRADE STABILIZATION "A" PROFILE

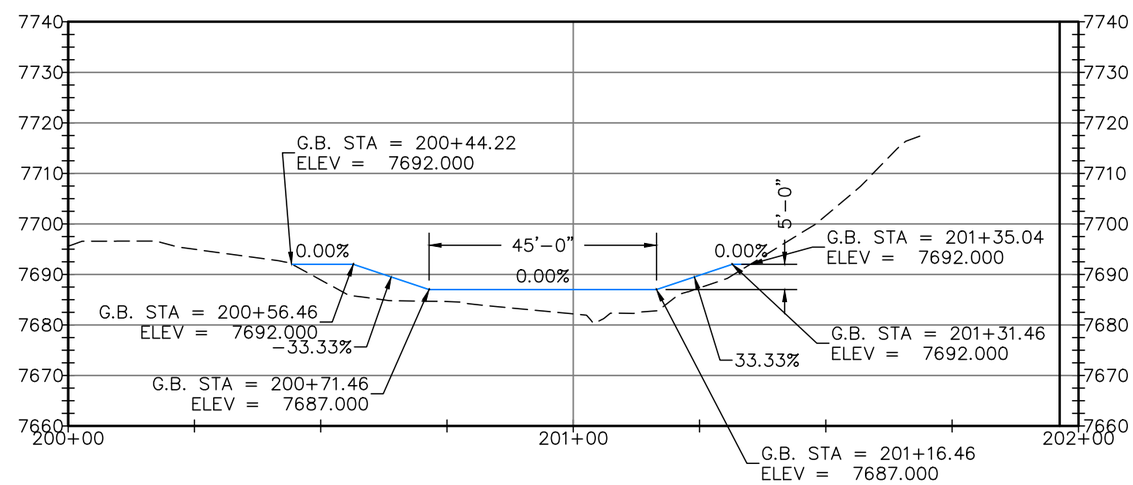

ROCK GRADE STABILIZATION "B" PROFILE

THIS DRAWING IS TO BE USED FOR THIS PROJECT AND THIS PROJECT ONLY UNLESS AUTHORIZED BY THE PROJECT ENGINEER AT JOHANSEN & TUTTLE ENGINEERS, INC.

DESIGNED	HRT	3-19	CHECKED MDJ 3-19
DRAWN	DMF	3-19	CHECKED MDJ 3-19
SURVEYED	BHT	3-19	CHECKED LMS 3-19
R.O.W.			CHECKED

PROJECT FILE:
P:\Projects\2018\EM\Emery County Trail Mountain Emergency Protection\ENGR\DRAWINGS\Sheets\Rilda

REV.	DESCRIPTION	BY.	DATE
1	CHANGED ROCK PER NRCS.	DMF	10-10-19

johansen & tuttle ENGINEERING INC.
P.O. BOX 487, CASTLE DALE, UTAH 84513 (435) 381-2523
FAX (435) 381-2522 email jt @ etv.net

TRAIL MOUNTAIN
EMERGENCY WATERSHED
PROTECTION PROJECT
RILDA CANYON NORTH
EMERY SPRINGS 2019

EMERY COUNTY

ROCK GRADE
STABILIZATION
"A" & "B"
PLAN AND PROFILE

SHEET NO.
28

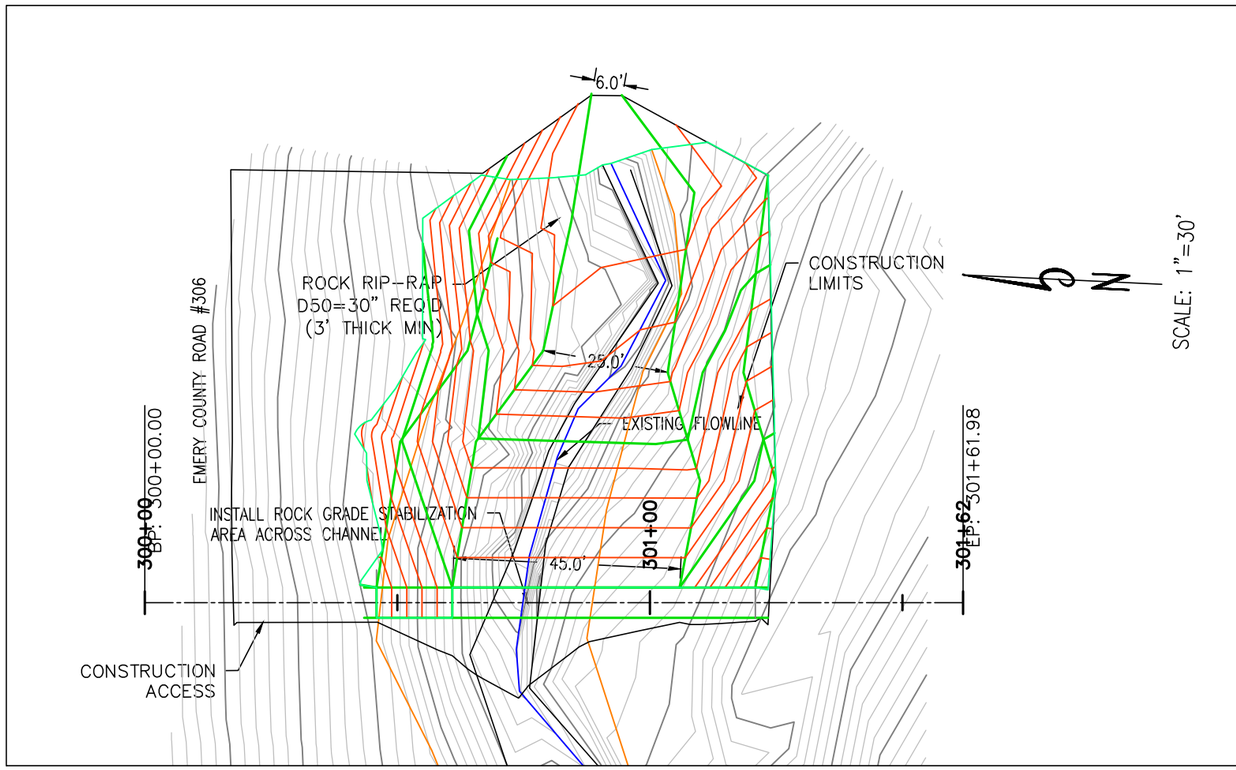

ROCK GRADE STABILIZATION "C" ALIGNMENT SITE PLAN

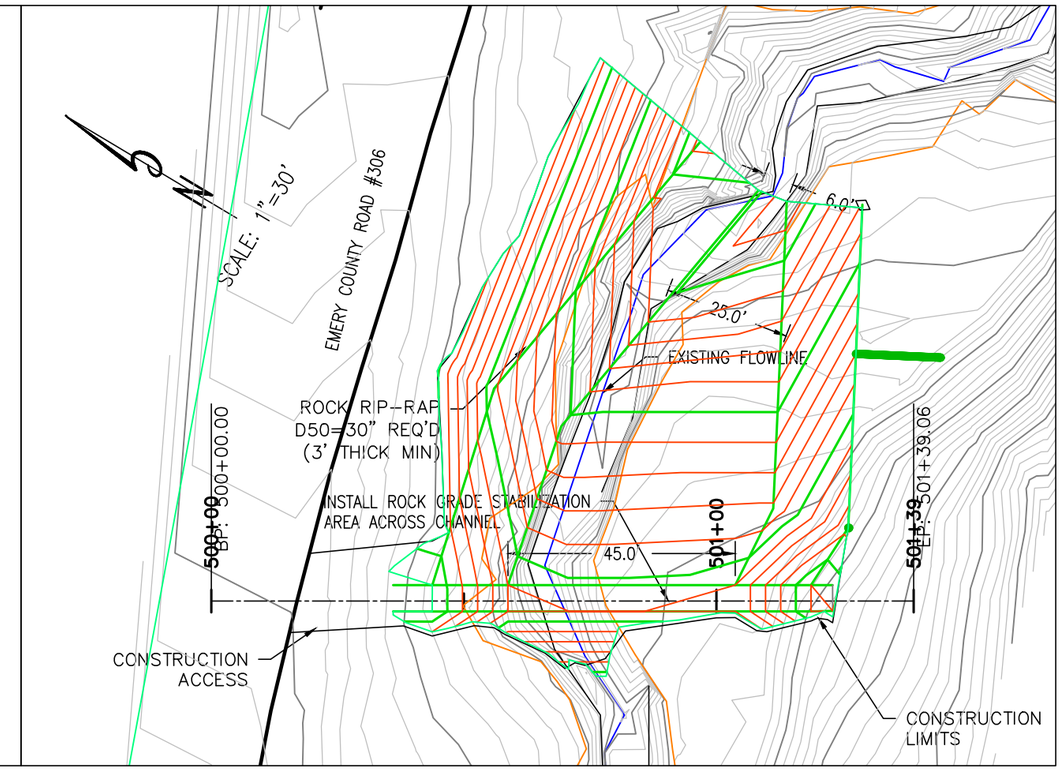

ROCK GRADE STABILIZATION "D" ALIGNMENT SITE PLAN

NOTES:
1. HEIGHT OF ROCK SPILLWAY VARIES TO ENSURE A SPILLWAY WIDTH OF 45 FEET NECESSARY TO PASS 100 YEAR STORM FLOWS.
2. ABUTMENTS WILL HAVE A 5' FREEBOARD DEPTH ABOVE WEIR ELEVATION.

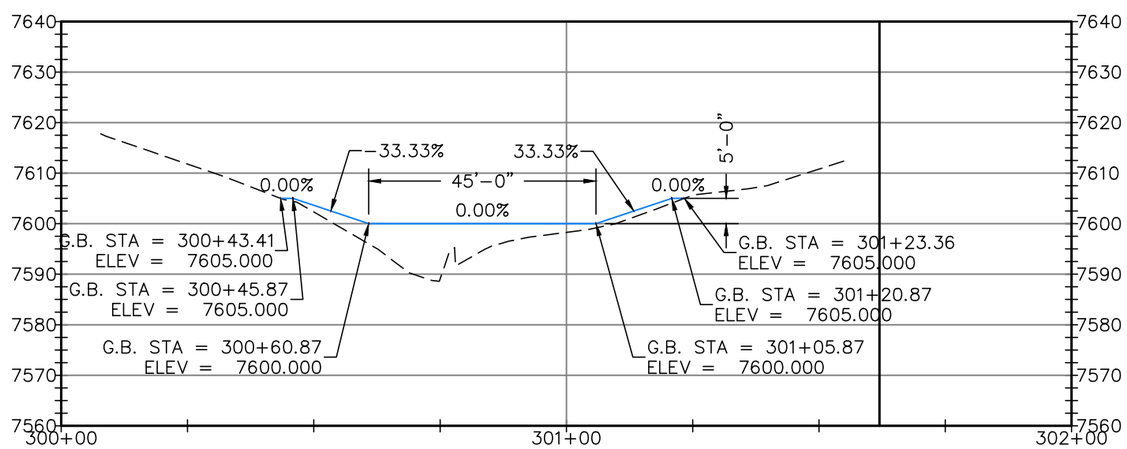

ROCK GRADE STABILIZATION "C" PROFILE

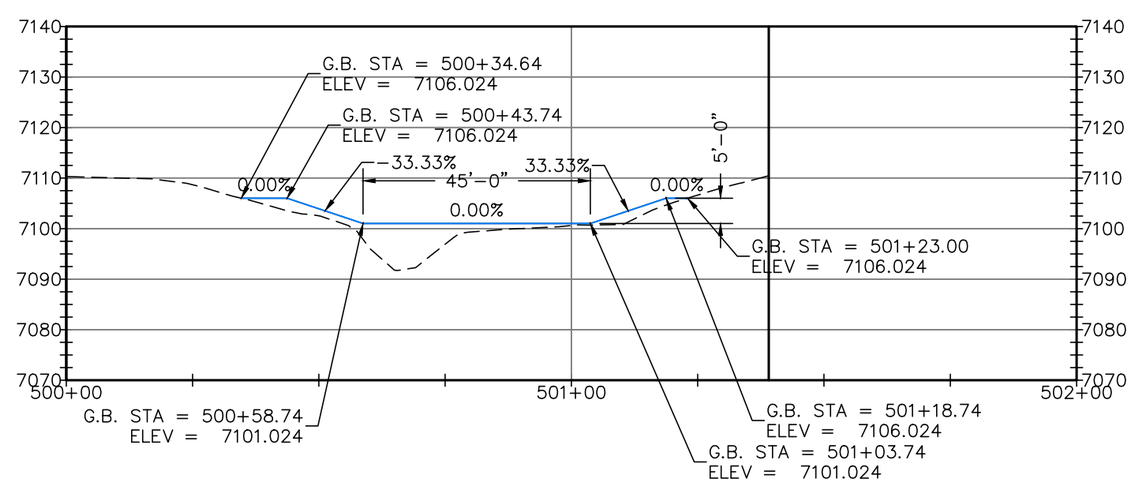

ROCK GRADE STABILIZATION "D" PROFILE

THIS DRAWING IS TO BE USED FOR THIS PROJECT AND THIS PROJECT ONLY UNLESS AUTHORIZED BY THE PROJECT ENGINEER AT JOHANSEN & TUTTLE ENGINEERS, INC.

DESIGNED	HRT	3-19	CHECKED MDJ 3-19
DRAWN	DMF	3-19	CHECKED MDJ 3-19
SURVEYED	BHT	3-19	CHECKED LMS 3-19
R.O.W.			CHECKED

PROJECT FILE
TRAIL MOUNTAIN EMERGENCY PROTECTION
Emergency Protection\ENGR\DRAWINGS\Sheets\Rilda

REV.	DESCRIPTION	BY.	DATE
1	CHANGED ROCK PER NRCS.	DMF	10-10-19

johansen & tuttle ENGINEERING INC.
P.O. BOX 487, CASTLE DALE, UTAH 84513 (435) 381-2523
FAX (435) 381-2522 email jt @ etv.net

TRAIL MOUNTAIN
EMERGENCY WATERSHED
PROTECTION PROJECT
RILDA CANYON NORTH
EMERY SPRINGS 2019

EMERY COUNTY

ROCK GRADE
STABILIZATION
"C" & "D"
PLAN AND PROFILE

SHEET NO.
29

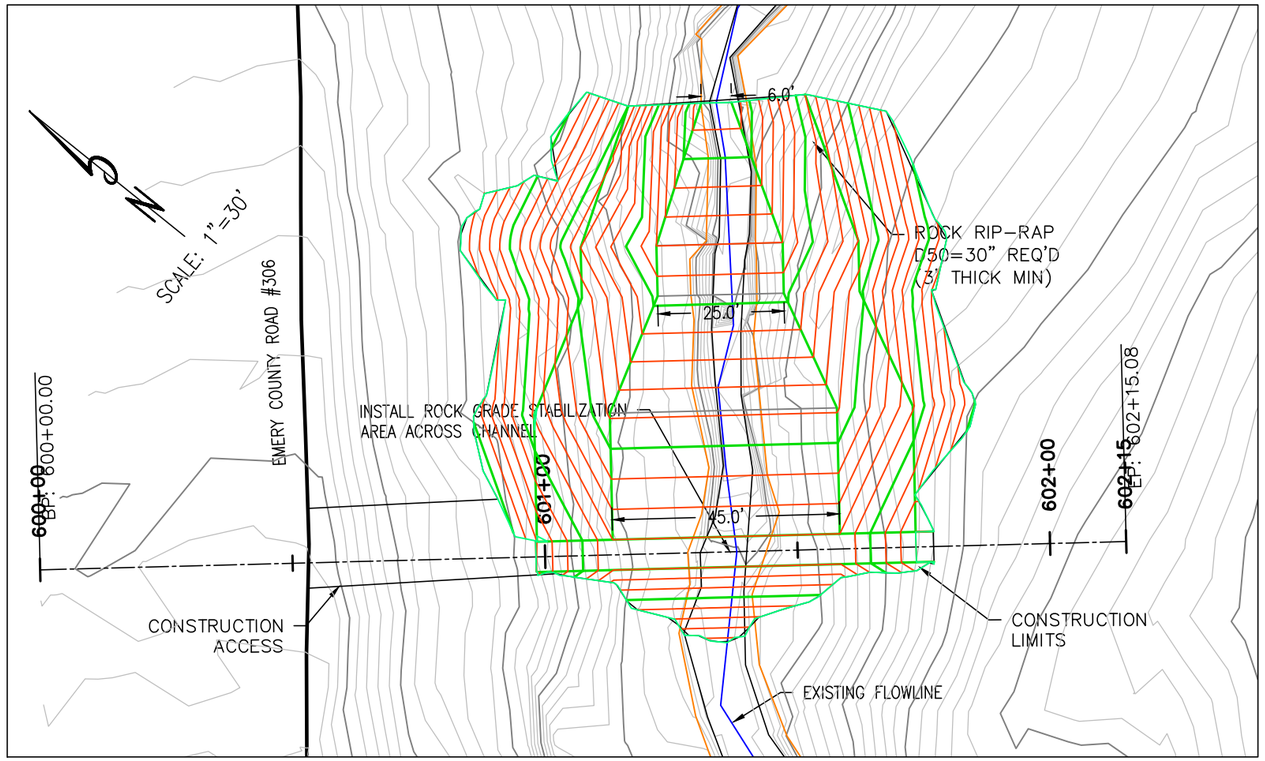

ROCK GRADE STABILIZATION "E"
ALIGNMENT SITE PLAN

NOTES:
1. HEIGHT OF ROCK SPILLWAY VARIES TO ENSURE A SPILLWAY WIDTH OF 45 FEET NECESSARY TO PASS 100 YEAR STORM FLOWS.
2. ABUTMENTS WILL HAVE A 5' FREEBOARD DEPTH ABOVE WEIR ELEVATION.

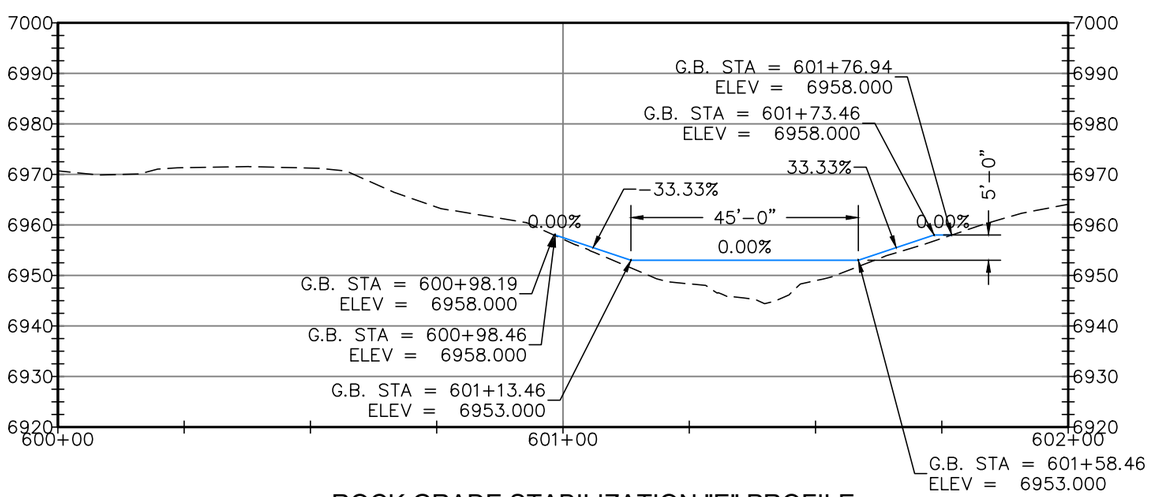

ROCK GRADE STABILIZATION "E" PROFILE

THIS DRAWING IS TO BE USED FOR THIS PROJECT AND THIS PROJECT ONLY UNLESS AUTHORIZED BY THE PROJECT ENGINEER AT JOHANSEN & TUTTLE ENGINEERS, INC.

DESIGNED	HRT	3-19	CHECKED MDJ 3-19
DRAWN	DMF	3-19	CHECKED MDJ 3-19
SURVEYED	BHT	3-19	CHECKED LMS 3-19
R.O.W.			CHECKED

PROJECT FILE
TS\Sheet\PT01
Emergency Protection\ENGR\DRAWINGS\Sheets\Rilda

REV.	DESCRIPTION	BY	DATE
1	CHANGED ROCK PER NRCS.	DMF	10-10-19

johansen & tuttle ENGINEERING INC.
P.O. BOX 487, CASTLE DALE, UTAH 84513 (435) 381-2523
FAX (435) 381-2522 email jt @ etv.net

TRAIL MOUNTAIN
EMERGENCY WATERSHED
PROTECTION PROJECT
RILDA CANYON NORTH
EMERY SPRINGS 2019

EMERY COUNTY

ROCK GRADE
STABILIZATION "E"
PLAN AND PROFILE

SHEET NO.
30

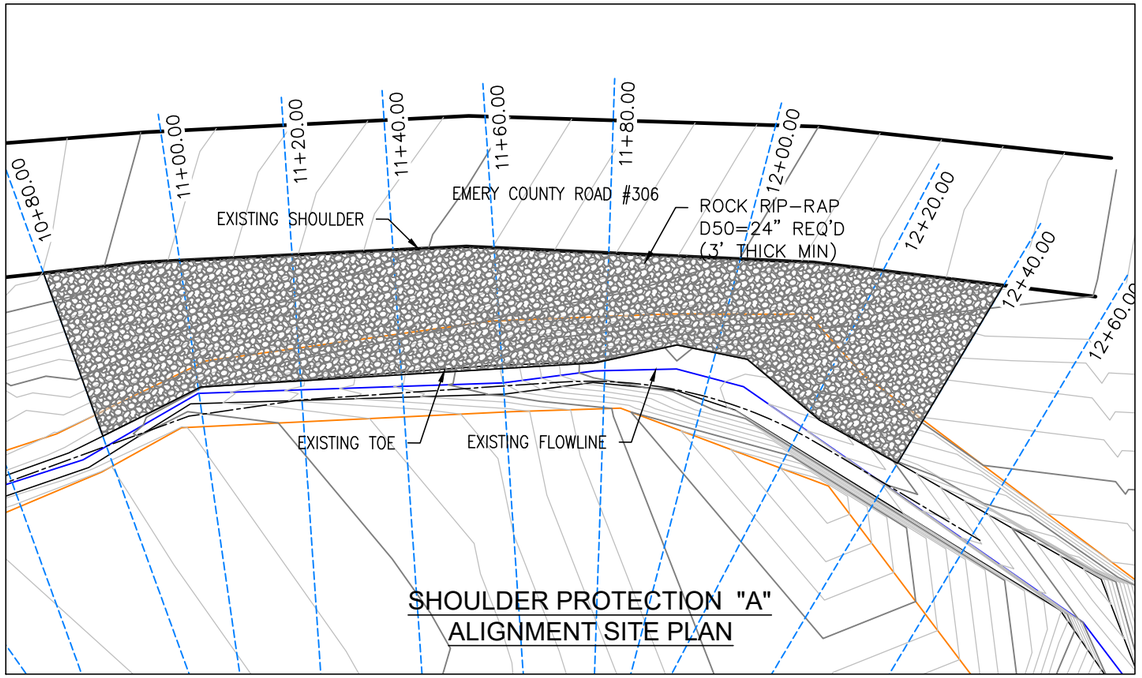

SHOULDER PROTECTION "A"
ALIGNMENT SITE PLAN

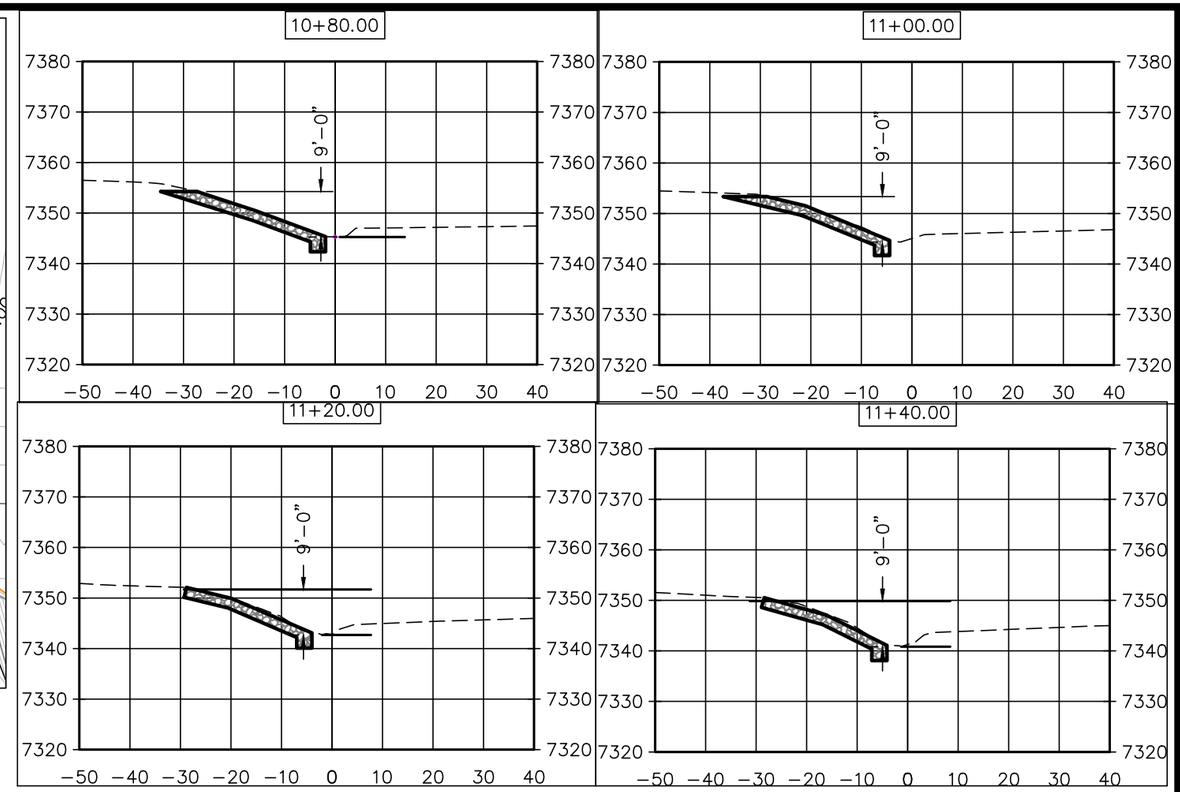

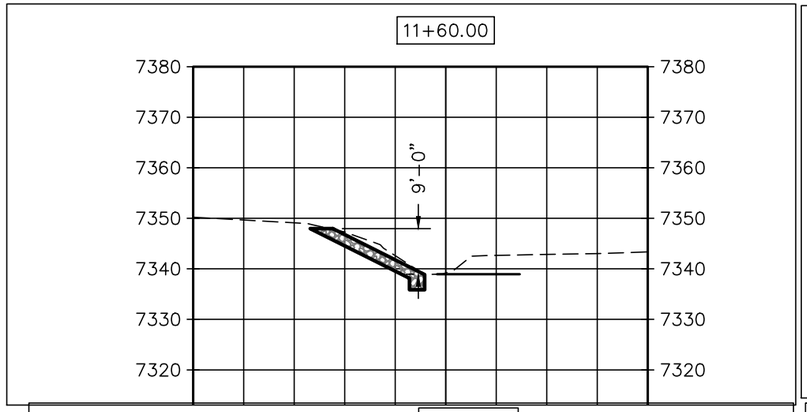

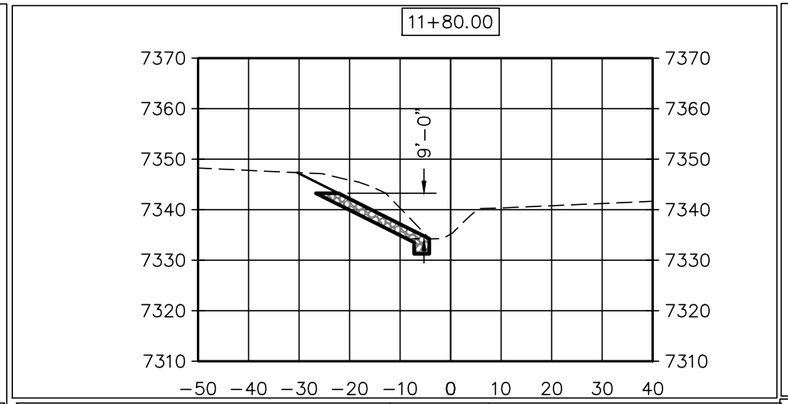

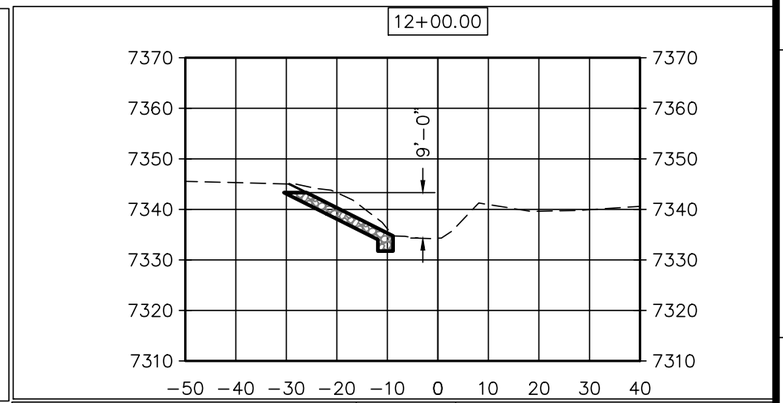

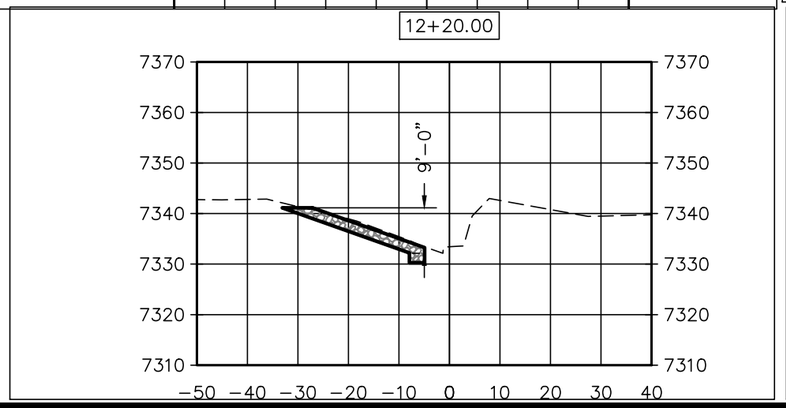

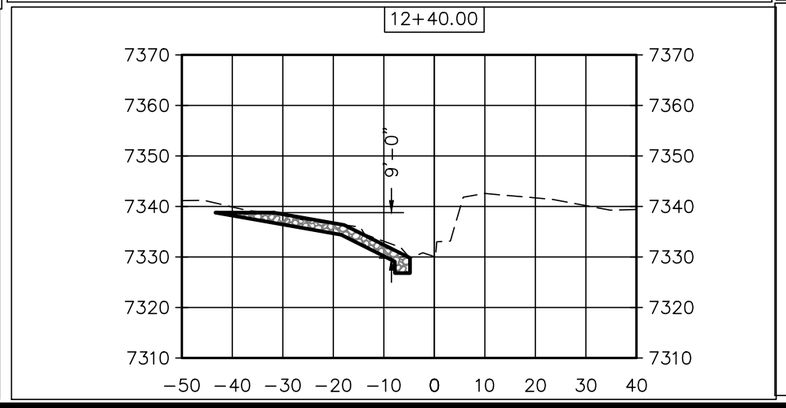

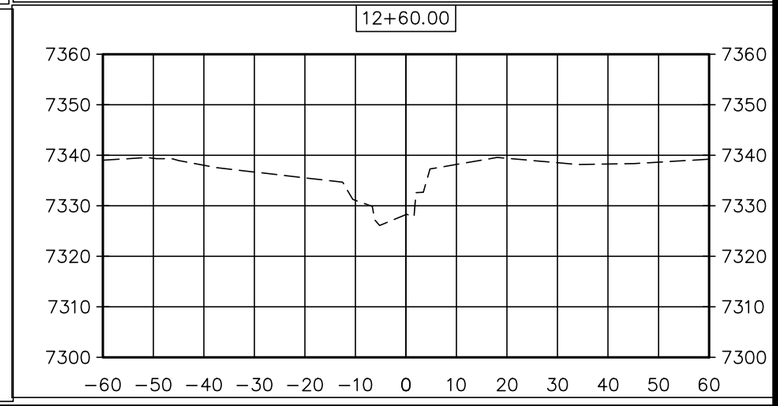

DESIGNED	HRT	3-19	CHECKED MDJ 3-19
DRAWN	DMF	3-19	CHECKED MDJ 3-19
SURVEYED	BHT	3-19	CHECKED LMS 3-19
R.O.W.			CHECKED

PROJECT FILE
P:\2019\Trail Mountain Emergency Protection\ENGR\DRAWINGS\Sheets\Rilda

THIS DRAWING IS TO BE USED FOR THIS PROJECT AND THIS PROJECT ONLY UNLESS AUTHORIZED BY THE PROJECT ENGINEER AT JOHANSEN & TUTTLE ENGINEERS INC.

REV.	DESCRIPTION	BY	DATE

johansen & tuttle ENGINEERING INC.
P.O. BOX 487, CASTLE DALE, UTAH 84513 (435) 381-2523
FAX (435) 381-2522 email jt @ etv.net

TRAIL MOUNTAIN
EMERGENCY WATERSHED
PROTECTION PROJECT
RILDA CANYON NORTH
EMERY SPRINGS 2019

EMERY COUNTY

SHOULDER
PROTECTION "A"
PLAN AND PROFILE

SHEET NO.
31

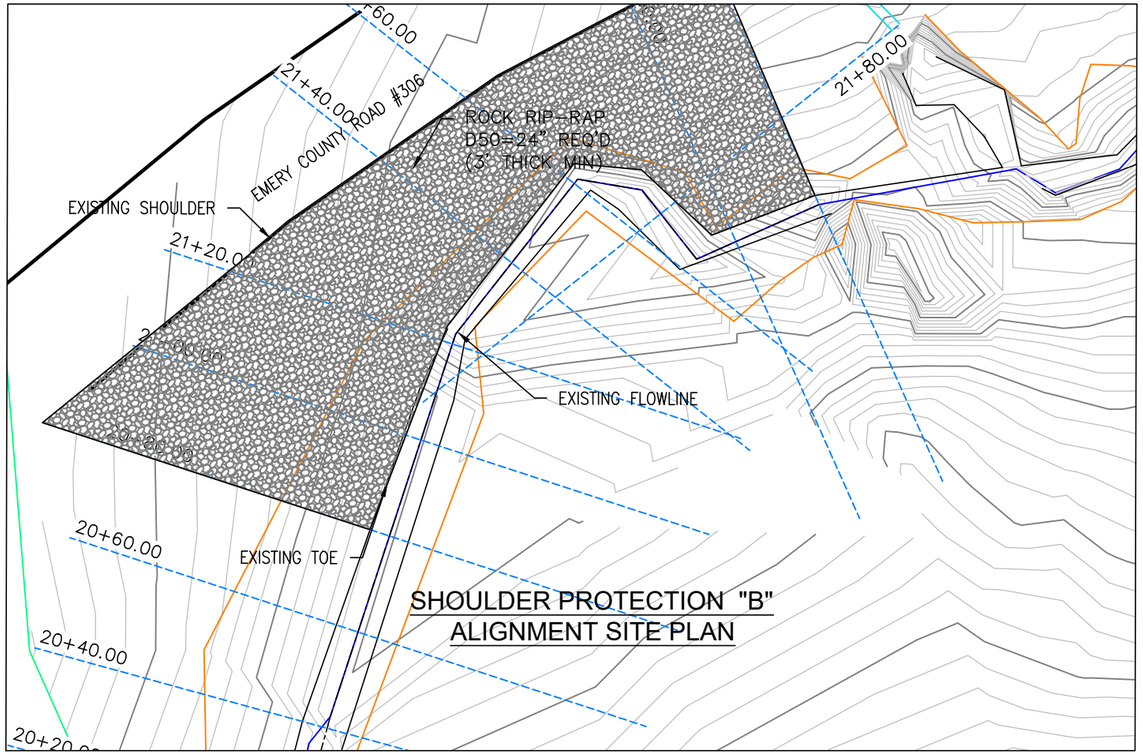

SHOULDER PROTECTION "B"
ALIGNMENT SITE PLAN

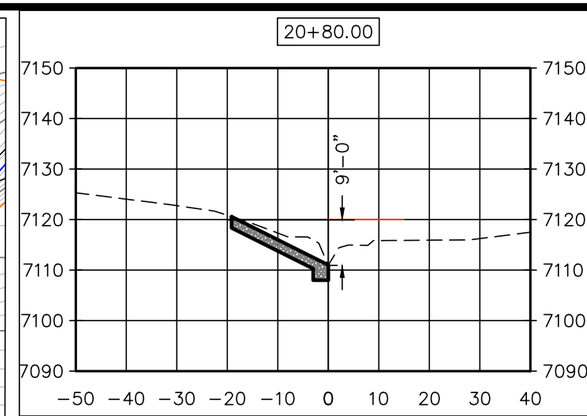

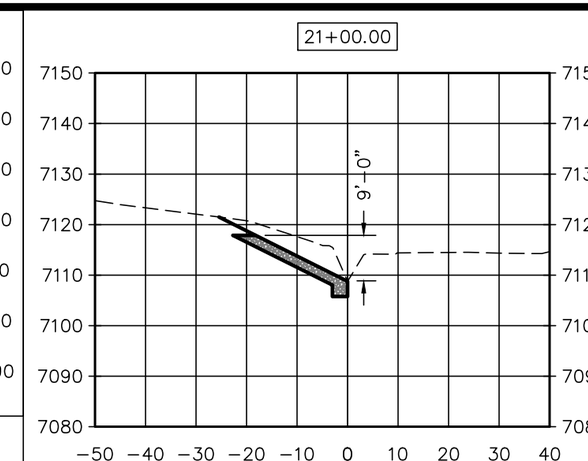

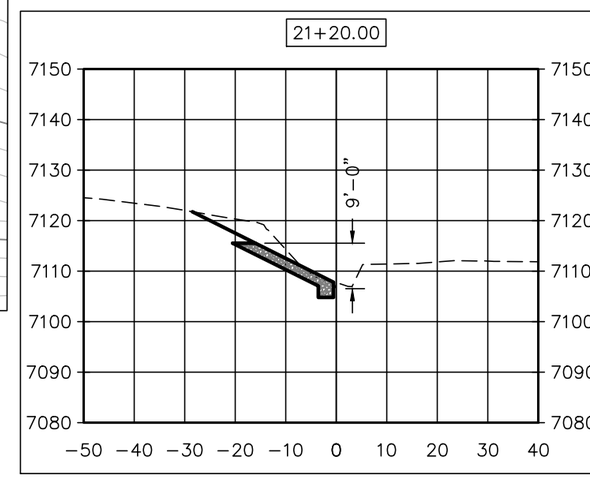

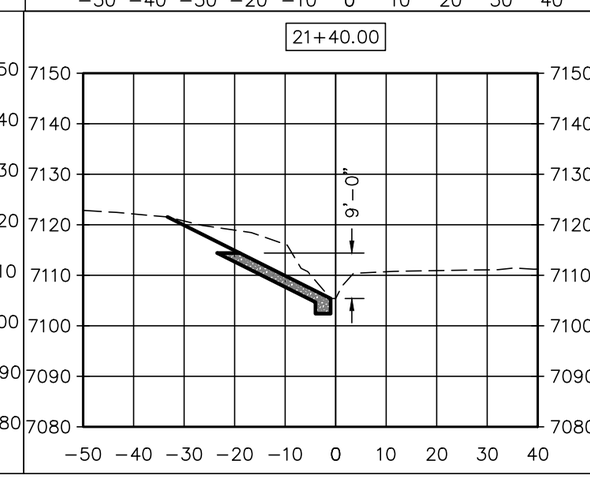

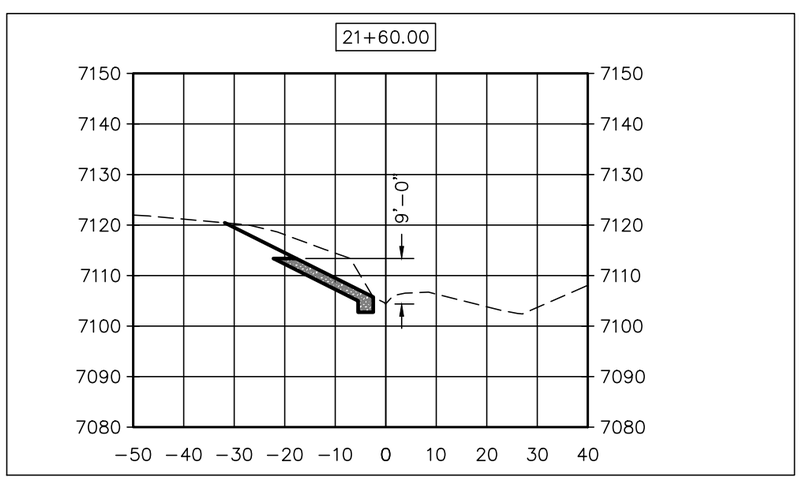

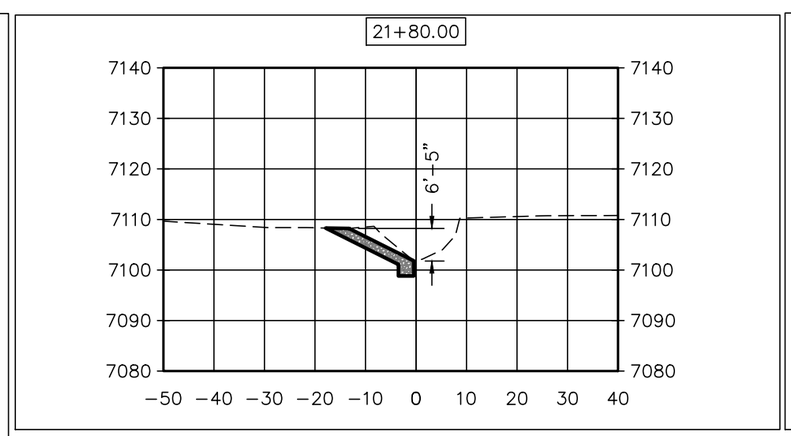

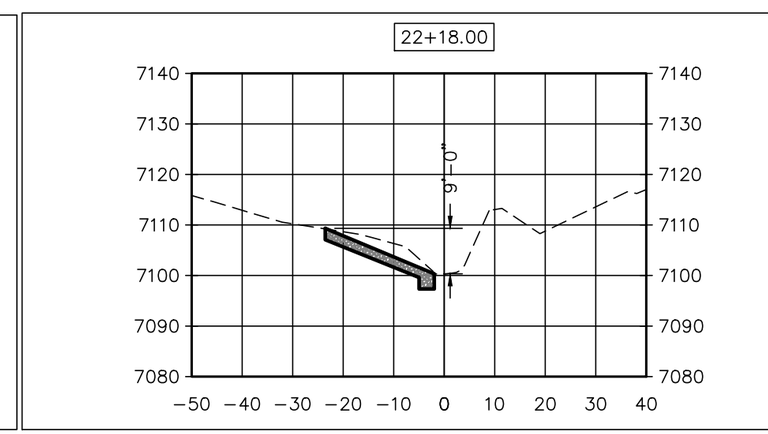

DESIGNED	HRT	3-19	CHECKED MDJ 3-19
DRAWN	DMF	3-19	CHECKED MDJ 3-19
SURVEYED	BHT	3-19	CHECKED LMS 3-19
R.O.W.			CHECKED

PROJECT FILE
TRAIL MOUNTAIN EMERGENCY WATERSHED PROTECTION PROJECT
Emergency Protection\ENGR\DRAWINGS\Sheets\Rilda

THIS DRAWING IS TO BE USED FOR THIS PROJECT AND THIS PROJECT ONLY UNLESS AUTHORIZED BY THE PROJECT ENGINEER AT JOHANSEN & TUTTLE ENGINEERS, INC.

REV.	DESCRIPTION	BY.	DATE

johansen & tuttle ENGINEERING INC.
P.O. BOX 487, CASTLE DALE, UTAH 84513 (435) 381-2523
FAX (435) 381-2522 email jt @ etv.net

TRAIL MOUNTAIN
EMERGENCY WATERSHED
PROTECTION PROJECT
RILDA CANYON NORTH
EMERY SPRINGS 2019

EMERY COUNTY

SHOULDER
PROTECTION "B"
PLAN AND CROSS
SECTIONS

SHEET NO.
32

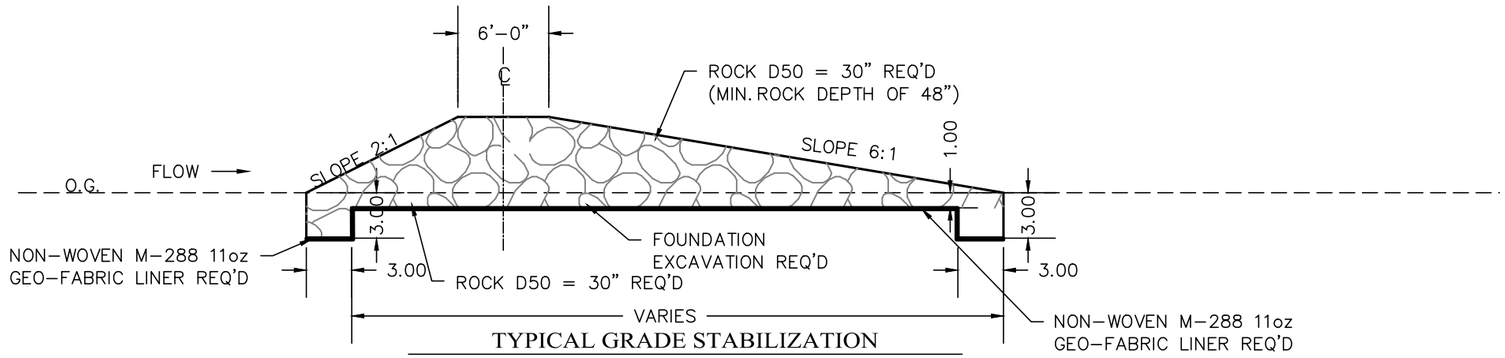

TYPICAL GRADE STABILIZATION

SCALE : 1" =10'

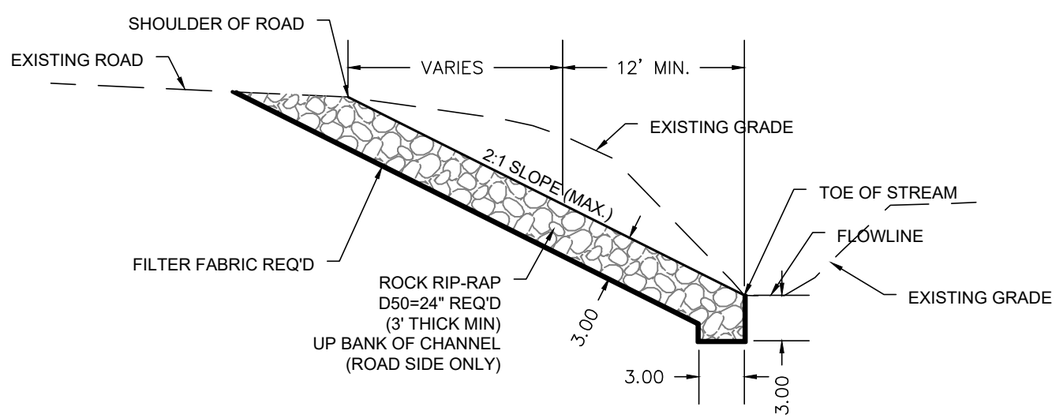

SHOULDER PROTECTION DETAIL

IN CUT SECTION
SCALE : 1" =10'

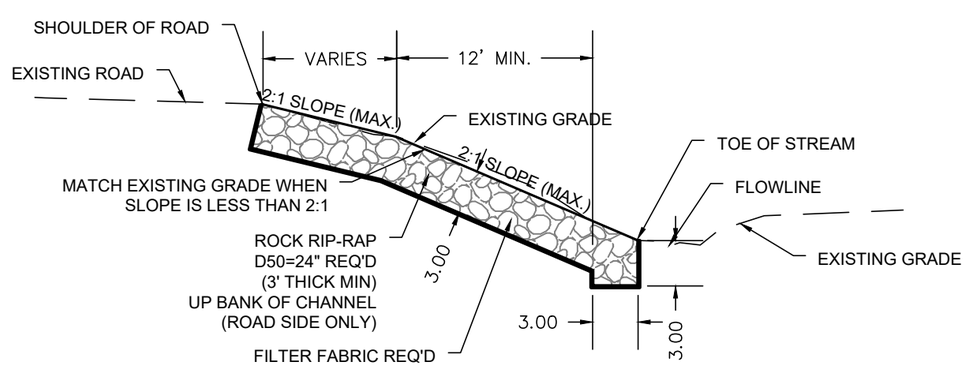

SHOULDER PROTECTION DETAIL

SCALE : 1" =10'

DESIGNED	HRT	3-19	CHECKED MDJ 3-19
DRAWN	DMF	3-19	CHECKED MDJ 3-19
SURVEYED	BHT	3-19	CHECKED LMS 3-19
R.O.W.			CHECKED

PROJECT FILE
TS-Sheets-2019
Emergency Protection\ENGR\DRAWINGS\Sheets\Rilda

THIS DRAWING IS TO BE USED FOR THIS PROJECT AND THIS PROJECT ONLY UNLESS AUTHORIZED BY THE PROJECT ENGINEER AT JOHANSEN & TUTTLE ENGINEERS INC.

REV.	DESCRIPTION	BY.	DATE

johansen & tuttle ENGINEERING INC.
P.O. BOX 487, CASTLE DALE, UTAH 84513 (435) 381-2523
FAX (435) 381-2522 email jt @ etv.net

TRAIL MOUNTAIN
EMERGENCY WATERSHED
PROTECTION PROJECT
RILDA CANYON NORTH
EMERY SPRINGS 2019

EMERY COUNTY

TYPICAL SECTIONS

SHEET NO.
33