① – WATER SUPPLY LOCATION
② – STORAGE AREA UNDERGROUND
③ – WASTE ROCK DISPOSAL
④ – FEEDER BREAKER LOCATION
⑤ – POWER CENTER LOCATION
⑥ – FIRE PROOF ENCLOSURE
⑦ – TRAVEL THRU DOORS
⑧ – STOPPING WITH MANDOOR

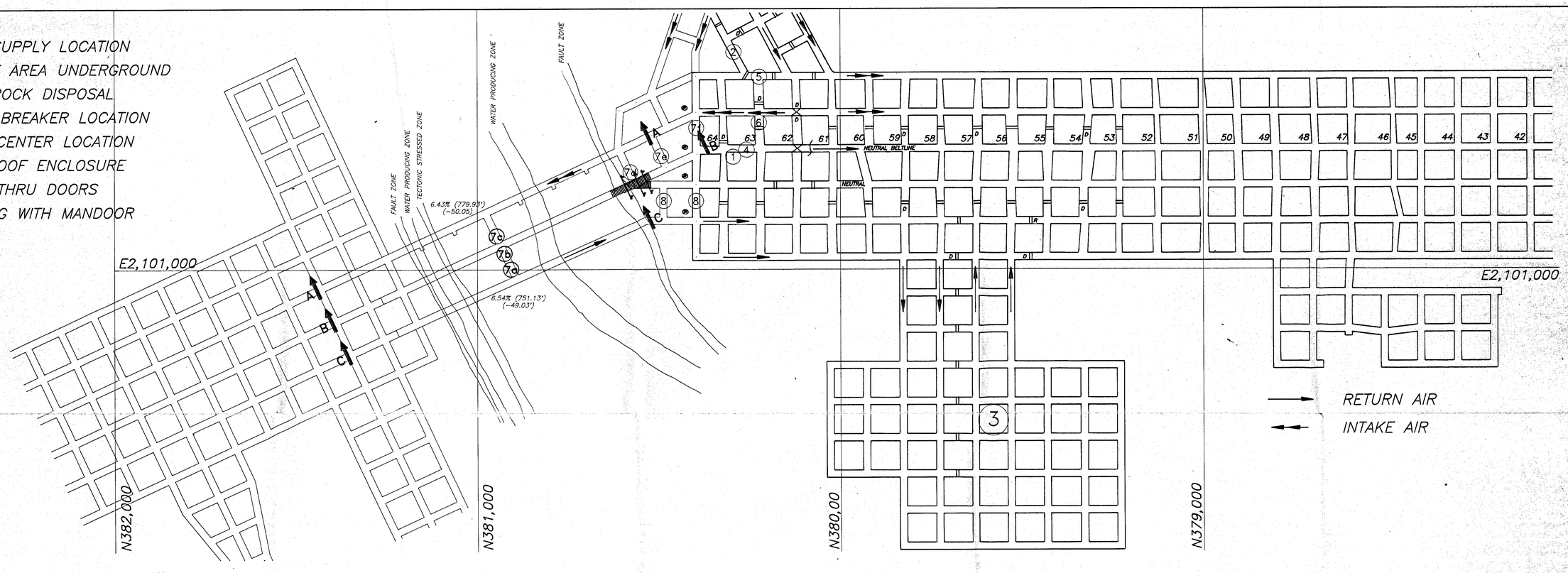

LAYOUT SCALE: 1"=120'

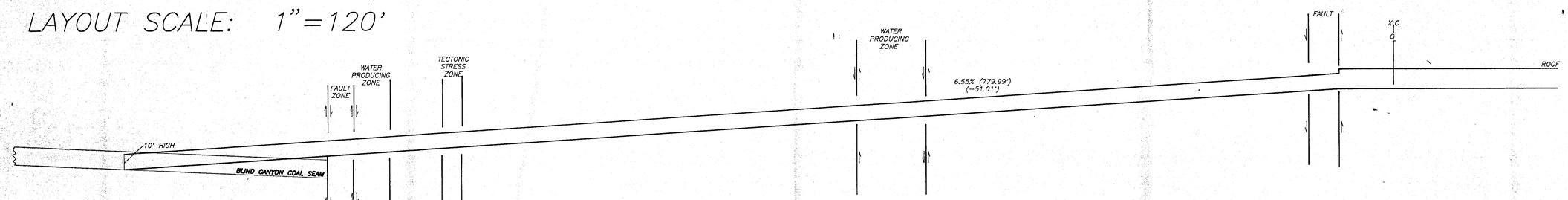

SECTION A–A
FIGURE 4A

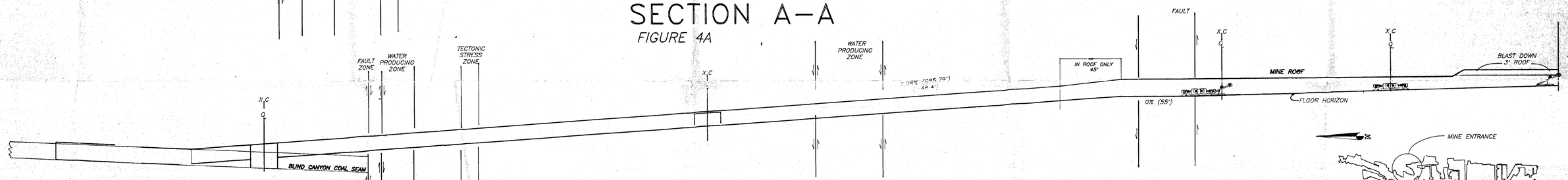

SECTION B–B
FIGURE 4B

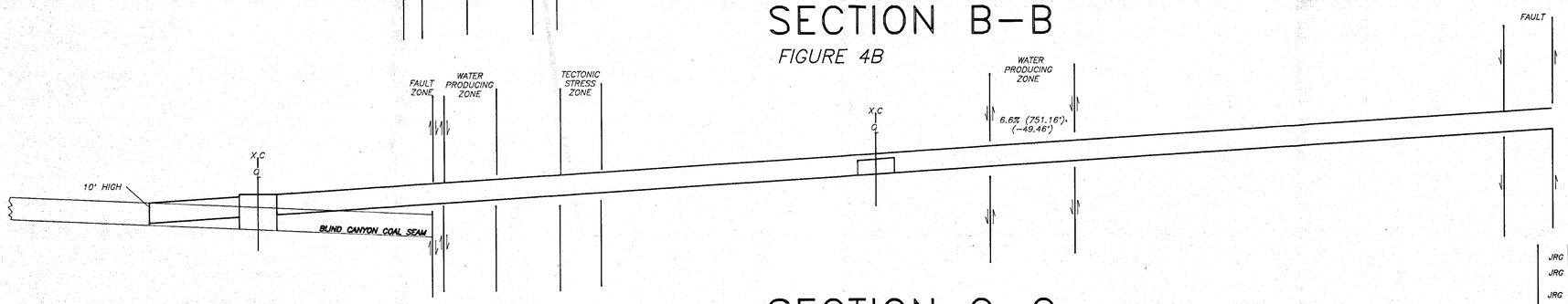

SECTION C–C
FIGURE 4C

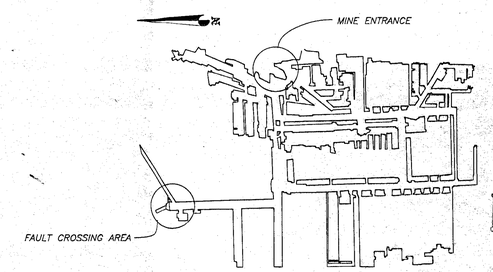

RECEIVED
APR 10 1989
DIVISION OF
OIL, GAS & MINING

PROFILE SCALE: 1"=30'

NAME	REVISION	DATE
JRG	ADDED COORDINATE LINES TO LAYOUT	3/8/89
JRG	ADDED LOCATION MAP AND CHANGED THE GRADE IN ALL ENTRIES	2/14/89
JRG	REVISED CROSS–SECTIONS AND CHANGED THE GRADE IN ALL ENTRIES	12/30/88
JRG	REVISED CROSS–SECTIONS	11/10/88
JRG	REVISED FAULT CROSSING ENTRIES AND SECTION C–C GRADE.	9/9/88

CAD FILE NAME/DESIGN FLTXSECT/9

UTAH POWER & LIGHT
MINING DIVISION
P.O. BOX 899, HELPER, UTAH 84526

ROANS CANYON FAULT CROSSING
ROCK TUNNEL LAYOUT
AND PROFILES

DRAWN BY: J. GARRETT
SCALE: AS NOTED
DATE: 7/13/88
DRAWING #: CM–10784–DR
SHEET 1 OF 1
REV. 6