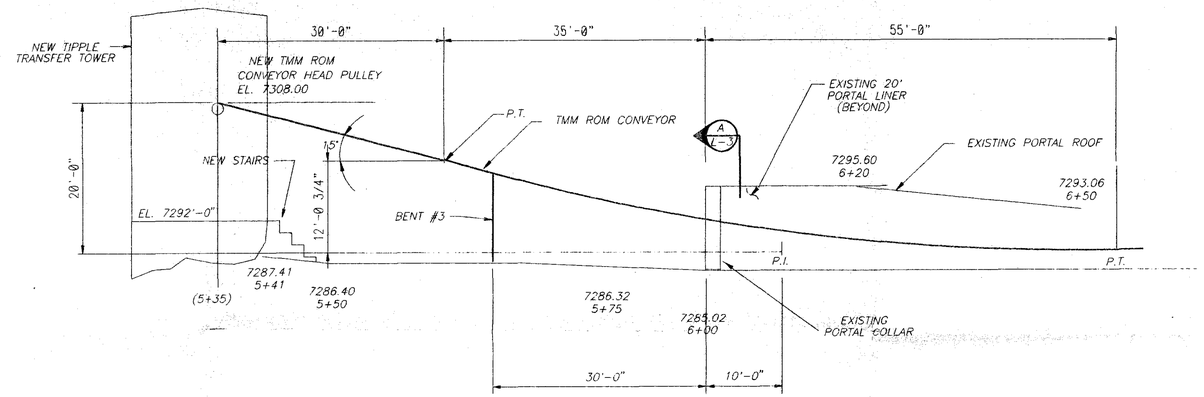

TMM ROM CONVEYOR BELT PROFILE – AREA 7A

SCALE: 1" = 10'

TOTAL AREA 7B CONSTRUCTION QUANTITIES	
MATERIAL	QUANTITY
ROCK EXCAVATION	130 YDS^3
SOIL EXCAVATION	989 YDS^3
COMPACTED & NON-COMPACTED FILL	601 YDS^3
CONCRETE	143 YDS^3
STRUCTURAL STL. TUBE & BENTS	361,400#

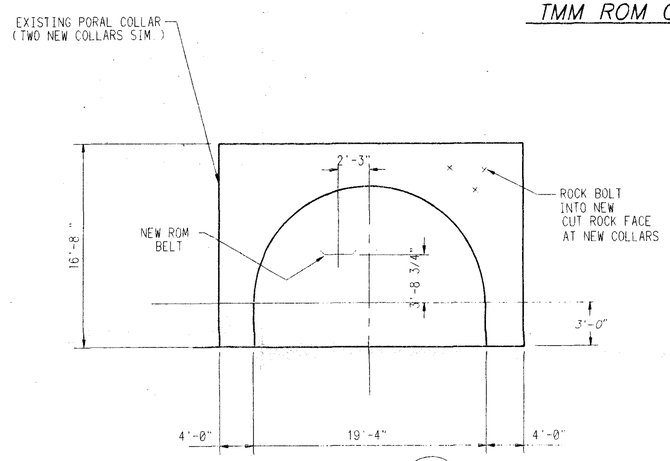

SECTION A
NTS

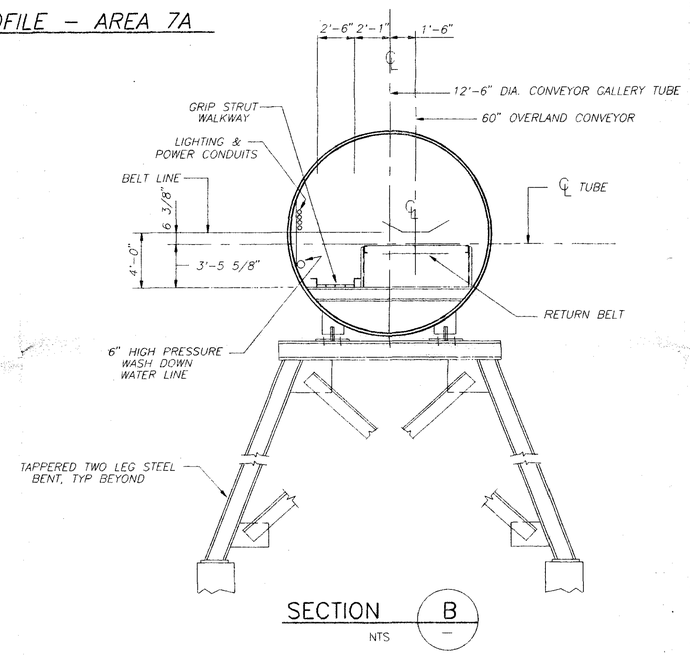

SECTION B
NTS

LEGEND

EXISTING CONTOUR

FINAL CONTOUR

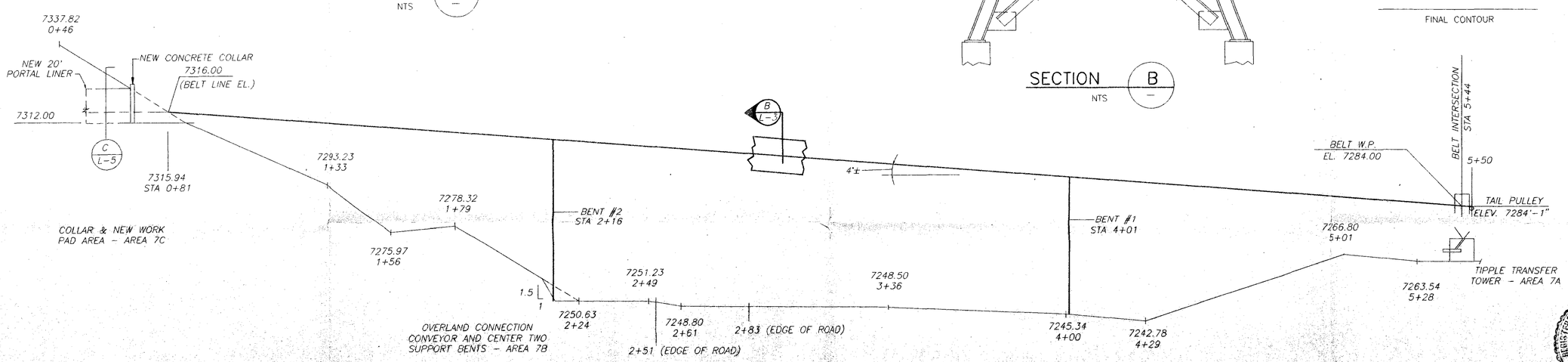

OVERLAND CONNECTION CONVEYOR CENTERLINE PROFILE

SCALE: 1" = 20'

REGISTERED PROFESSIONAL ENGINEER 6-20-94 No. 7528 GLEN E. PALMER STATE OF UTAH

APPROVED BY _____
TITLE _____ DATE _____
APPROVED BY _____
TITLE _____ DATE _____
APPROVED BY _____
TITLE _____ DATE _____

JUN 20 1994
01:48

NO.	DATE	REVISIONS	BY
1	5/12/94	GENERAL REVISIONS	GG
2	6/13/94	GENERAL REVISIONS	GG
3			
4			

PALMER ENGINEERING & DEVELOPMENT P.C.
Consulting Engineers
140 West 9000 South, Suite 4
Sandy, Utah 84070
(801) 561-2813 Fax (801) 561-2813
10 E. 100 South, Suite 201
Provo, Utah 84601
(801) 374-4141
A Professional Corporation

BELT PROFILES - AREA 7B

TRAIL MOUNTAIN MINE
OVERLAND CONNECTION CONVEYOR
ENERGY WEST MINING COMPANY

DRAWN	G.G.
CHECKED	GEP
DATE	4/7/94
SCALE	AS NOTED
JOB NO.	3222

L-3

OF SHEETS