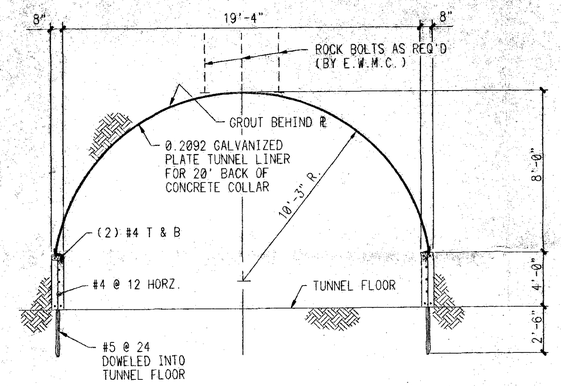

TYP. PORTAL LINER SECTION - AREA 7C (C)

SCALE: 1/4"=1'-0"

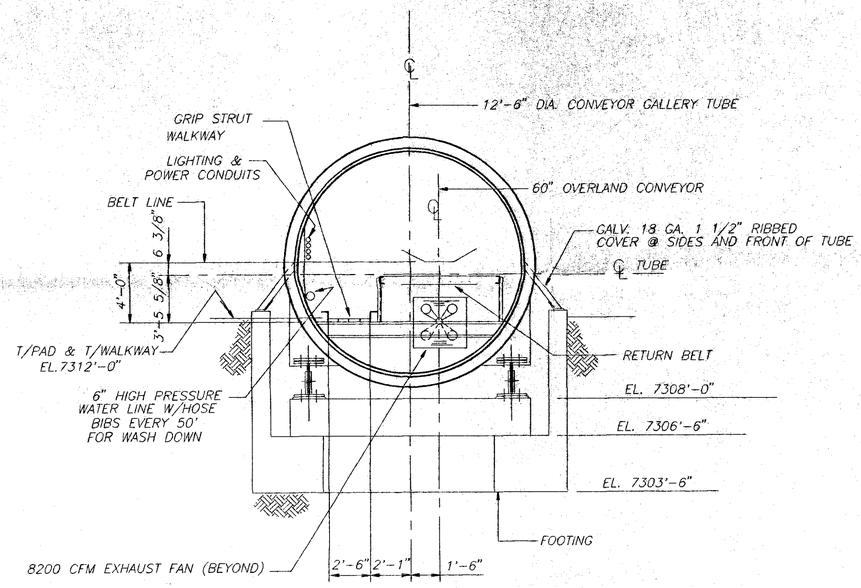

SECTION (B)

SCALE: 1/4"=1'-0"

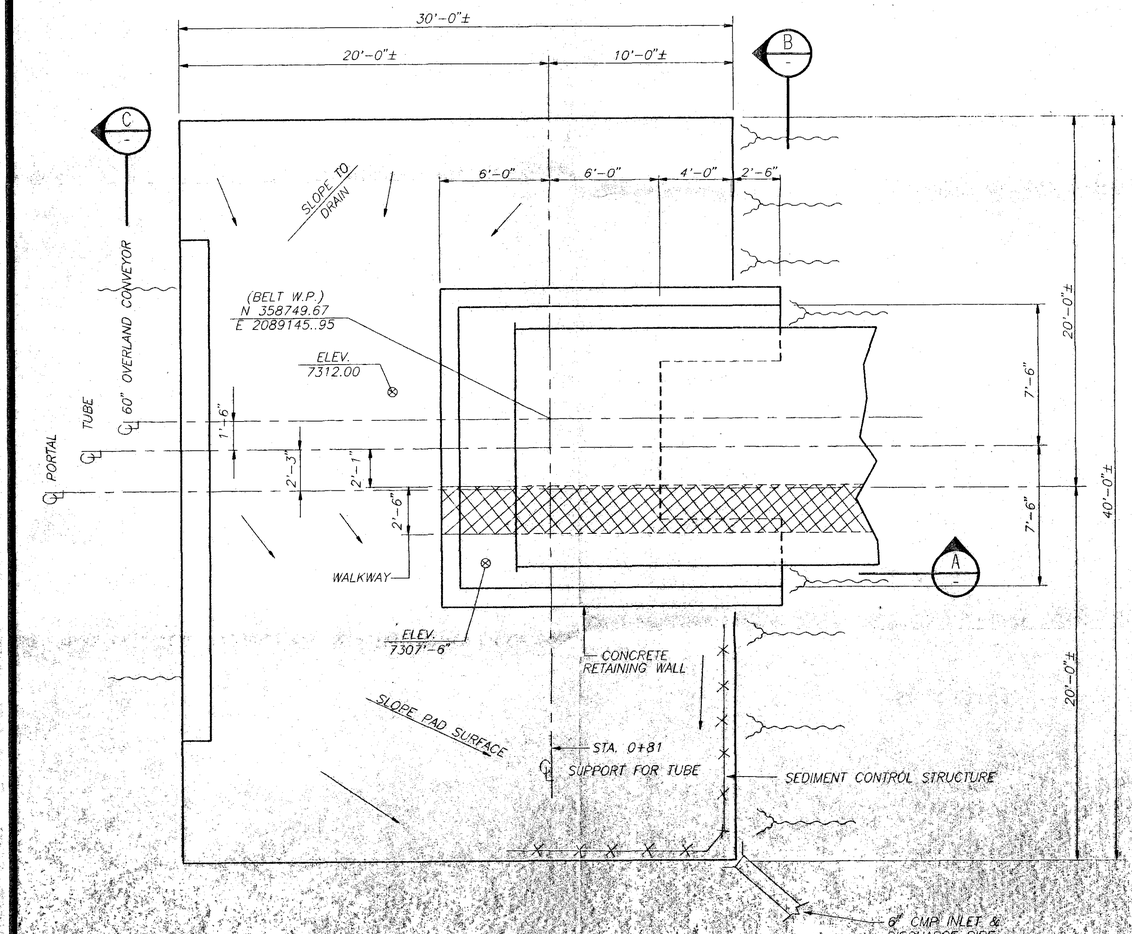

TUBE END SUPPORT

SCALE: 1/4"=1'-0"

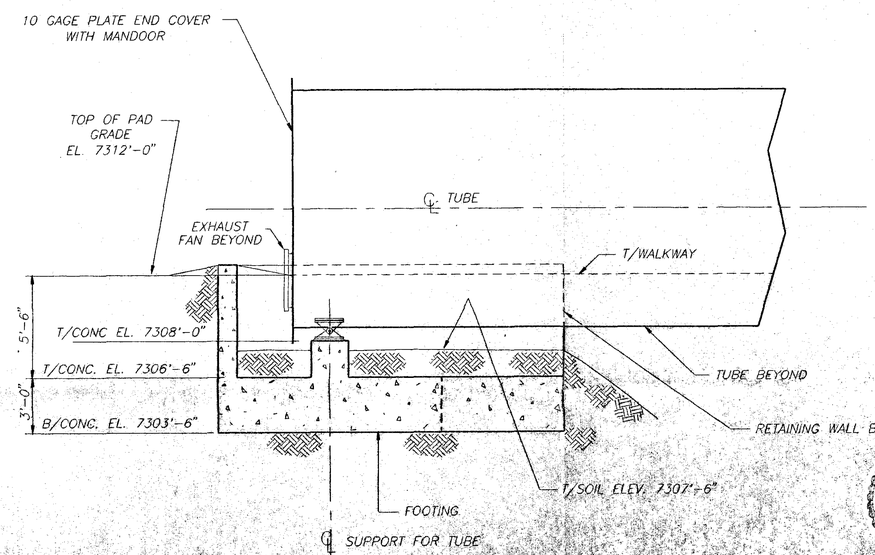

SECTION (A)

SCALE: 1/4"=1'-0"

REGISTERED PROFESSIONAL ENGINEER No. 7528 GLEN E. PALMER STATE OF UTAH

APPROVED BY		
TITLE		DATE
APPROVED BY		
TITLE		DATE
APPROVED BY		
TITLE		DATE

JUN 20 1994

REVISIONS			
NO.	DATE		BY
1	5/11/94	GENERAL REVISIONS	GG
2			
3			
4			

PALMER ENGINEERING & DEVELOPMENT, P.C.
Consulting Engineers
140 West 9000 South, Suite 4
Sandy, Utah 84070
(801) 561-0891, Fax (801) 561-2853
32 East 100 South, Suite 201
St. George, Utah 84770
(801) 674-4146
A Professional Corporation

DETAILS - AREA 7C

TRAIL MOUNTAIN MINE
OVERLAND CONNECTION CONVEYOR
ENERGY WEST MINING COMPANY

DRAWN	G.G.
CHECKED	GEP
DATE	4/7/94
SCALE	AS NOTED
JOB NO.	3222

L-5

OF SHEETS