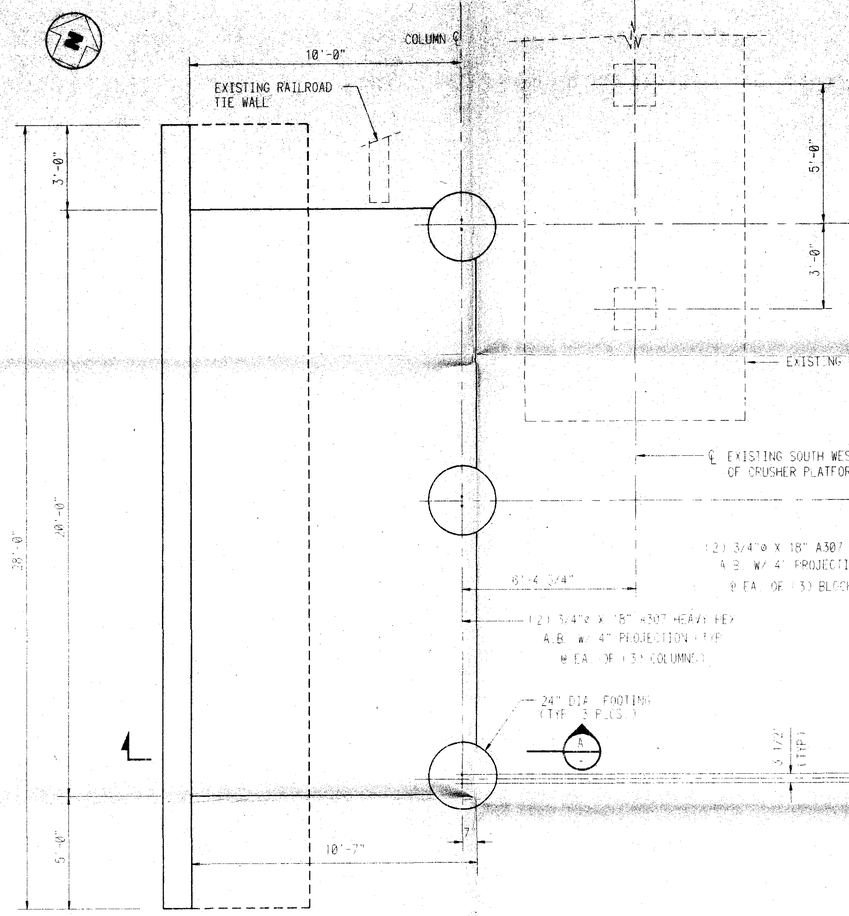

FOUNDATION PLAN

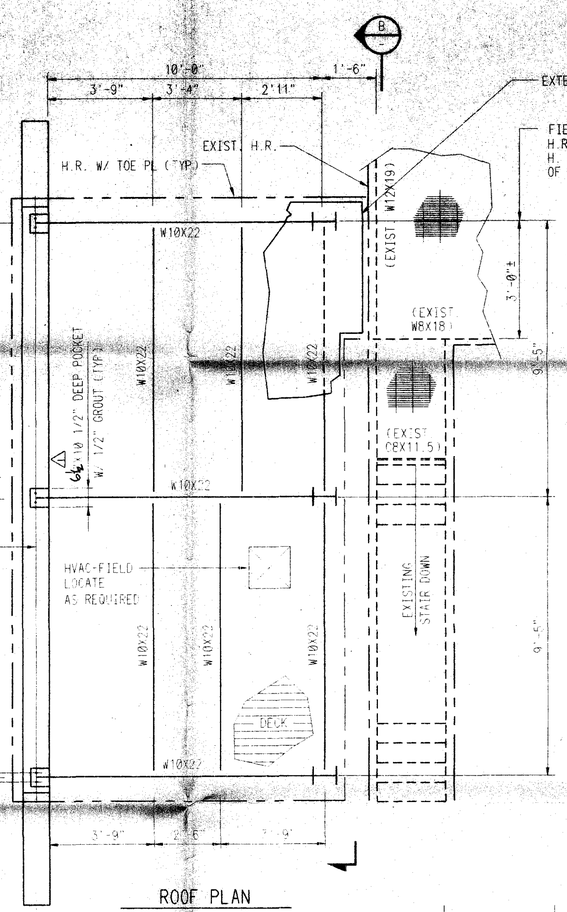

ROOF PLAN

(T/STL. VARIES)

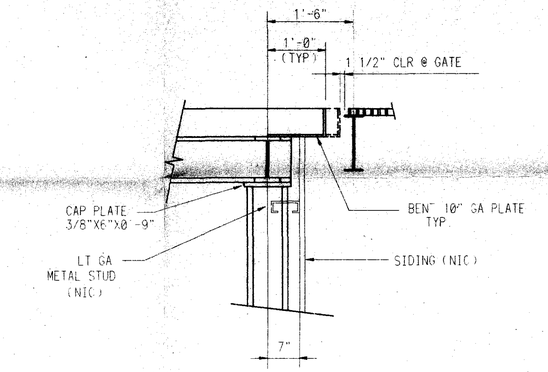

DETAIL #1

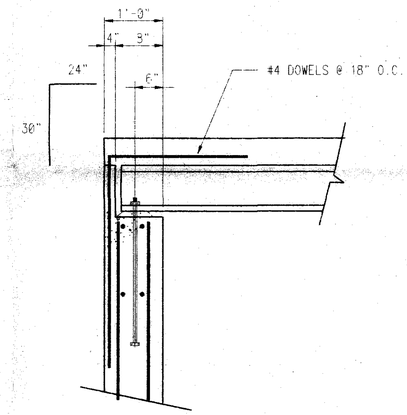

DETAIL #2

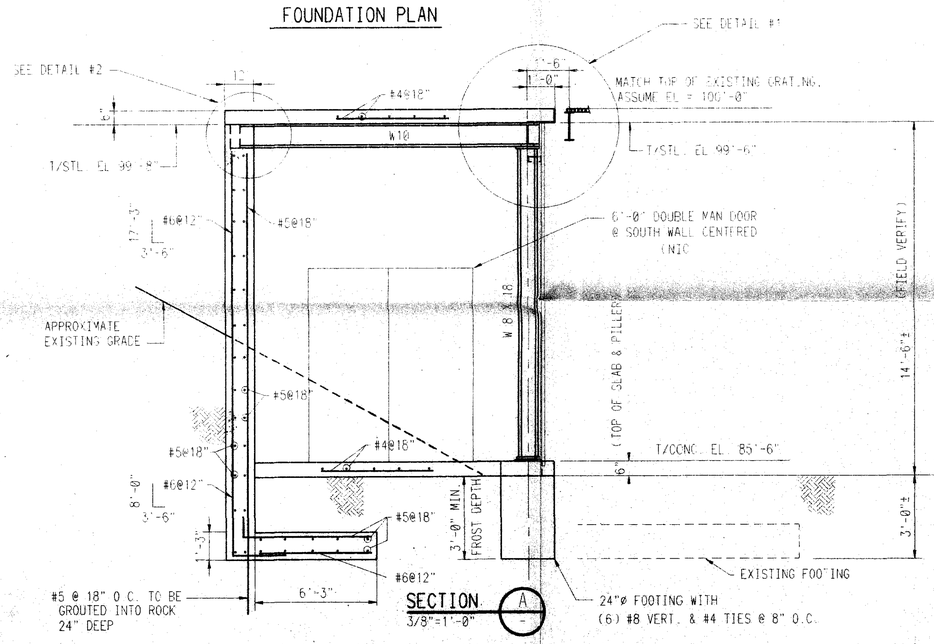

SECTION A
3/8"=1'-0"

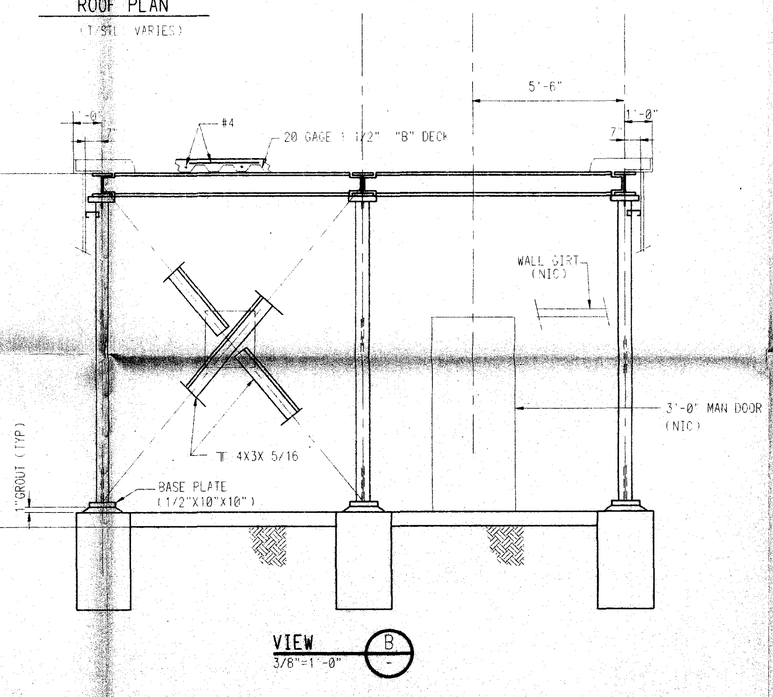

VIEW B
3/8"=1'-0"

NO.	DATE	REVISIONS	BY
1	6-5-94	REVISED PROJECT MGR.	GG
2			
3			
4			

PALMER ENGINEERING & DEVELOPMENT, P.C.
Consulting Engineers
140 West 9000 South, Suite 4
Sandy, Utah 84070
(801) 561-2812 Fax (801) 561-2835
32 East 100 South, Suite 201/St. George, Utah 84770
(801) 674-4145
A Professional Corporation

TIPPLE ELECTRICAL FACILITY - AREA 7A
TRAIL MOUNTAIN MINE
OVERLAND CONNECTION CONVEYOR
ENERGY WEST MINING COMPANY

REGISTERED PROFESSIONAL ENGINEER
No. 7525
GLEN E. PALMER
STATE OF UTAH
11-13-94

APPROVED BY _____
TITLE _____ DATE _____
APPROVED BY _____
TITLE _____ DATE _____
APPROVED BY _____
TITLE _____ DATE _____

DRAWN	G.G.
CHECKED	GEP
DATE	4/7/94
SCALE	3/8"=1'-0"
JOB NO.	3222

L-10

OF SHEETS

JUN 20 1994