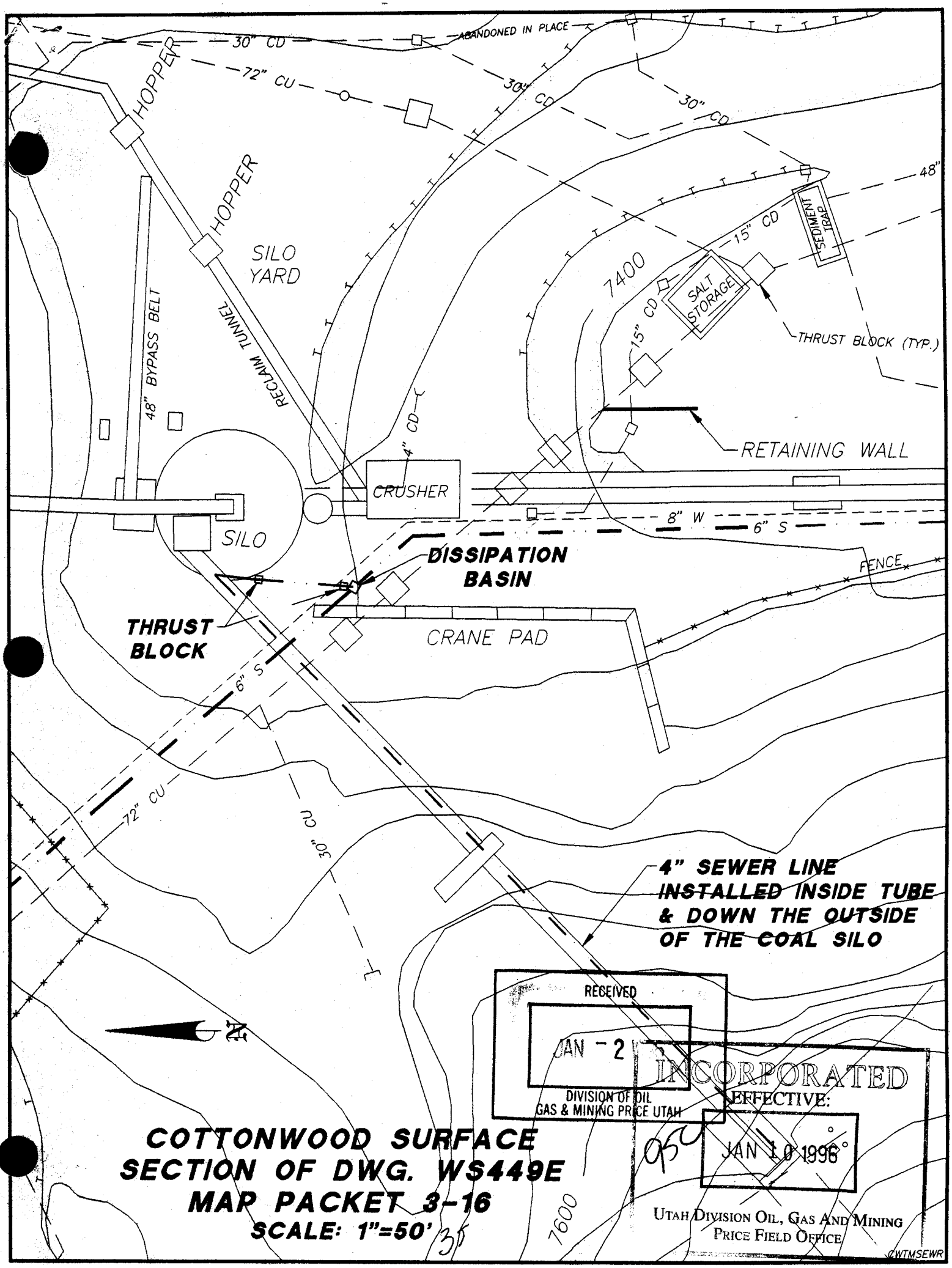

RECEIVED
JAN - 2
DIVISION OF OIL GAS & MINING PRICE UTAH

INCORPORATED
EFFECTIVE:
JAN 10 1996
UTAH DIVISION OIL, GAS AND MINING PRICE FIELD OFFICE

COTTONWOOD SURFACE SECTION OF DWG. WS449E
MAP PACKET 3-16
SCALE: 1"=50'

35

CWTMSEWR

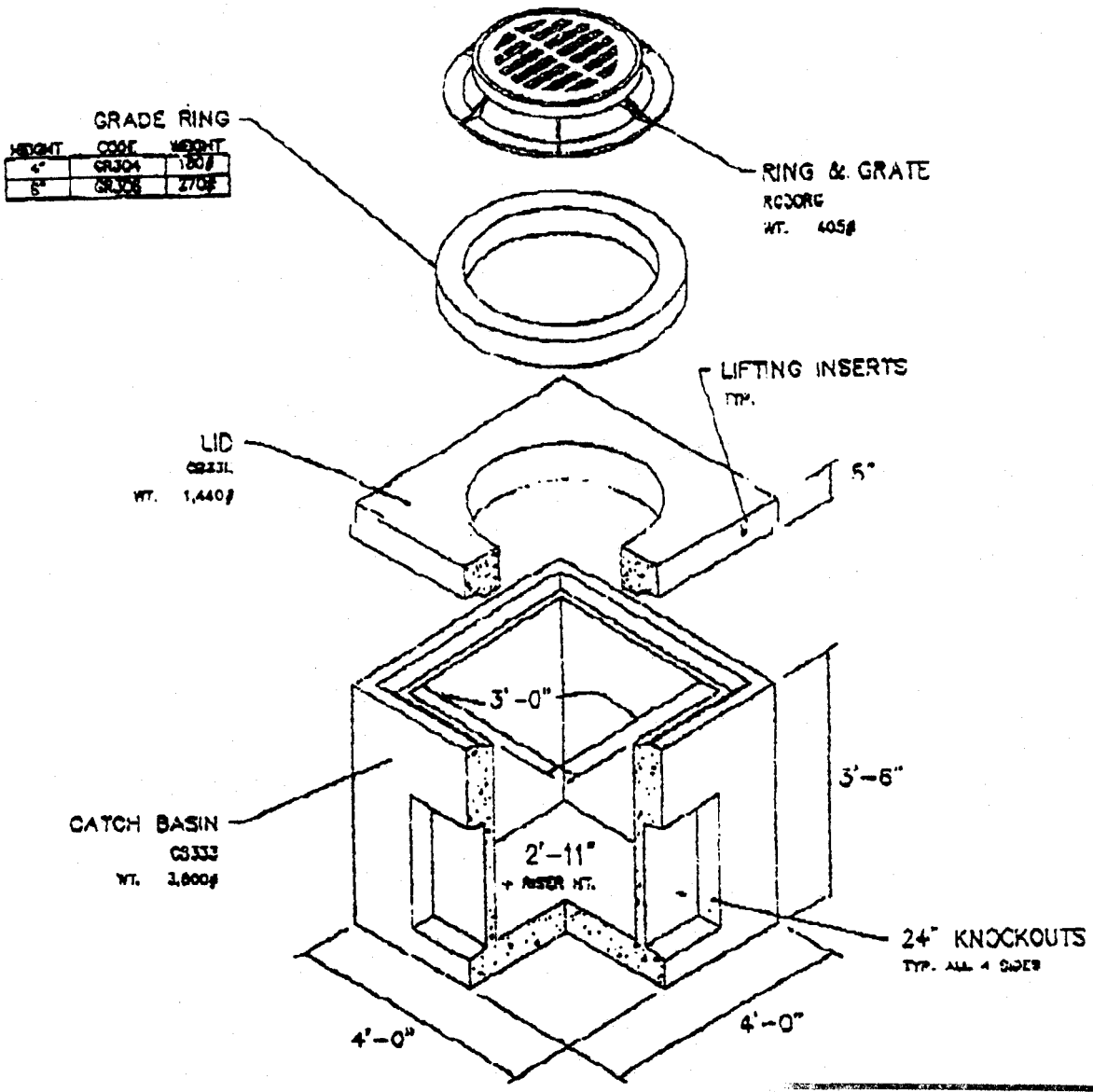

INCORPORATED
EFFECTIVE:
954 JAN 10 1996
UTAH DIVISION OIL, GAS AND MINING
PRICE FIELD OFFICE

ENERGY DISSIPATION BASIN

RECEIVED
JAN - 2 1996
DIVISION OF OIL
GAS & MINING PRICE UTAH

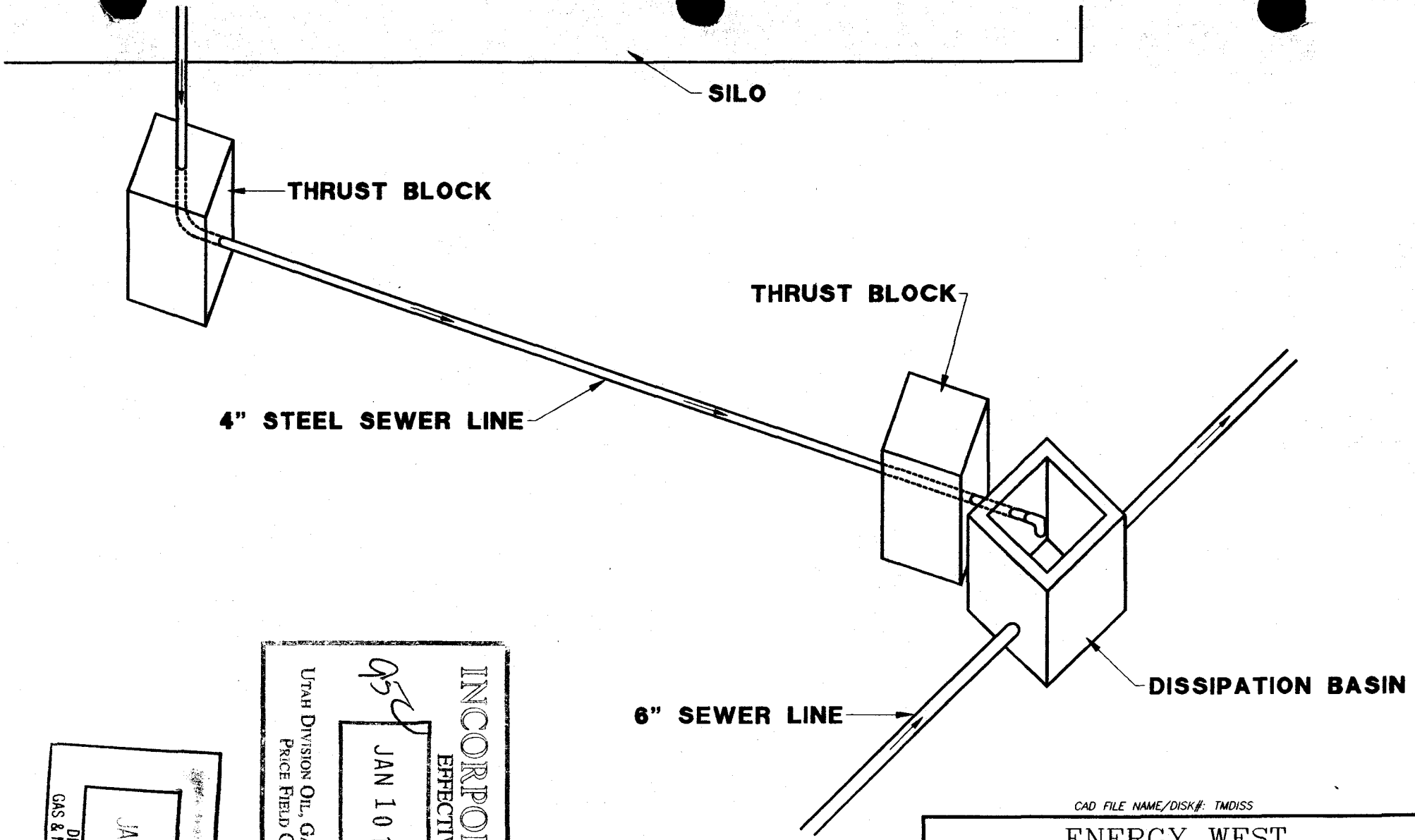

CAD FILE NAME/DISK#: TMDISS

ENERGY WEST
MINING COMPANY
HUNTINGTON, UTAH 84528

COTTONWOOD/TRAIL MOUNTAIN
4" SEWER LINE TIE
AND DISSIPATION BASIN

DRAWN BY:	K. LARSEN	...	
SCALE:	1"=5'	DRAWING #:	
DATE:	JANUARY 2, 1996	SHEET 1 OF 1	REV. ___

INCORPORATED
EFFECTIVE:
JAN 10 1996
UTAH DIVISION OIL, GAS AND MINING
PRICE FIELD OFFICE

RECEIVED
JAN - 2 1996
DIVISION OF OIL
GAS & MINING PRICE UTAH

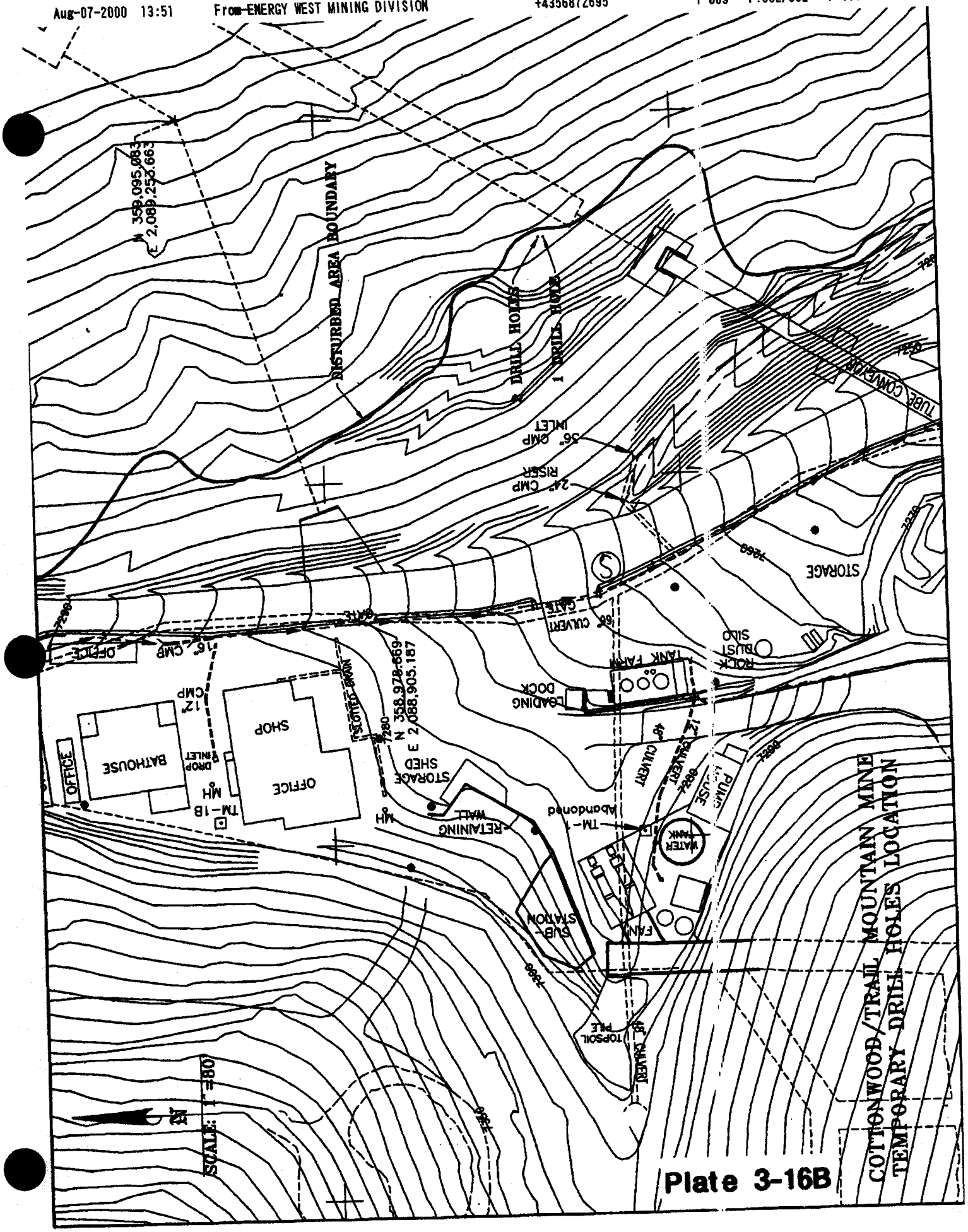
N 359,095.083
E 2,089,253.663
DISTURBED AREA BOUNDARY
2 DRILL HOLES
1 DRILL HOLE
36" CMP INLET
24" CMP RISER
TUBE CONVEYOR
STORAGE
GATE
66" CULVERT
16" CMP
OFFICE
12" CMP
BATHOUSE
DROP INLET
MH
TM-1B
SHOP
OFFICE
SLOTTED DRAIN
N 358,978.669
E 2,088,905.187
STORAGE SHED
RETAINING WALL
TM-1 Abandoned
LOADING DOCK
TANK FARM
ROCK DUST SILO
48" CULVERT
12" CULVERT
PUMP HOUSE
WATER TANK
SUB-STATION
FAN
TOPSOIL PILE
48" CULVERT
SCALE: 1"=80'
N
COTTONWOOD/TRAIL MOUNTAIN MINE
TEMPORARY DRILL HOLES LOCATION

Plate 3-16B