Plate 8-2

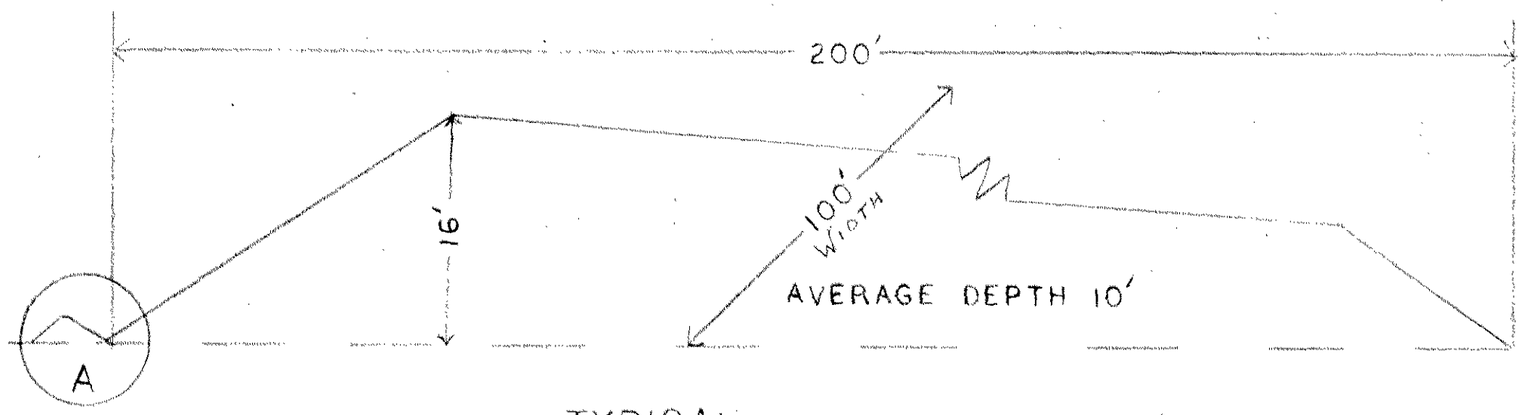

TYPICAL

CROSS SECTION

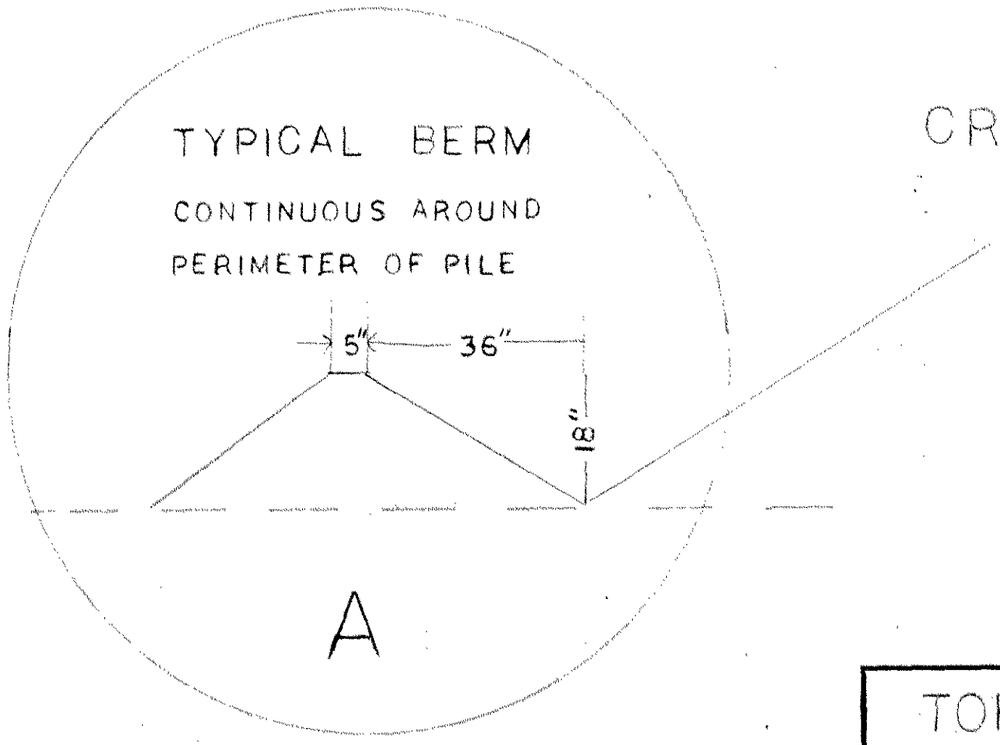

REGISTERED PROFESSIONAL ENGINEER
No. 4540
DAN W. GUY
11/6/83
STATE OF UTAH

TOPSOIL STOCKPILE		
SCALE: NOT SCALED	APPROVED BY:	DRAWN BY
DATE:		REVISED
BEAR CANYON		
PLATE 8-2		DRAWING NUMBER