CHAPTER X

Fish and Wildlife Resources

PART 10.3 Existing Fish and Wildlife Resources

10.3.1	Wildlife Habitats in Mine Plan Area	See Vegetation and Terrestrial Wildlife Report included in Chapter IX as Item IX-1
10.3.2	Wildlife	
10.3.2.1	Aquatic Wildlife and Habitat and Value Determination	
10.3.2.2	Terrestrial Wildlife and Habitat and Value Determination	
10.3.2.3	Mammals	
10.3.2.4	Birds	
10.3.2.5	Reptiles and Amphibians	
10.3.3	Species of Special Signifigance	
10.3.3.1	Threatened and Endangered Species	
10.3.3.2	Raptors	

Note: Raptor study included in this also. See General Aquatic Resource Description included in this Chapter as Item X-1.

PART 10.4 Expected Impacts of Mining Operations on Fish and Wildlife

Development and operation will unavoidably impact several vertebrate species through habitat destruction and increased human presence. Better access will increase hunting pressure on big game species in the area. Crandall Creek has been determined not to be a fishery and will not be protected as such.

PART 10.5 Mitigation and Management Plans

Surface disturbance will be kept to a minimum. No "wholesale" clearing will be done either. The road will be designed as narrow as practically possible. Encroachment on Crandall Creek will be kept at a minimum to protect the creek as a source of potential food for trout downstream in Huntington Canyon.

PART 10.6 Stream Buffer Zone Determination by Division of Oil, Gas and Mining

As determined by Division of Oil, Gas and Mining.

Chapter 10 Continued-

PART 10.7 Fish and Wildlife Monitoring

As determined by Division of Oil, Gas and Mining.

PART 10.8 Bibliography

NONE

ITEM X-I

CHAPTER X

AQUATIC RESOURCES OF CRANDALL CANYON, EMERY COUNTY, UTAH

4 DECEMBER 1980

prepared for

GENWALL COAL COMPANY
Attn: Mr. William Wollen
Post Office Box 38
Orangeville, Utah 84537

prepared by:

Robert N. Winget,
Environmental Consultants
483 East 1834 South
Orem, Utah 84057

CHAPTER X
AQUATIC RESOURCES OF CRANDALL CANYON
EMERY COUNTY, UTAH

10.0 TABLE OF CONTENTS

	page
10.0 TABLE OF CONTENTS	1
10.1 SCOPE	2
10.2 METHODOLOGY	4
10.3 EXISTING FISH AND WILDLIFE RESOURCES	6
10.3.2.1 AQUATIC WILDLIFE AND HABITAT AND VALUE DETERMINATION	6
10.3.3 SPECIES OF SPECIAL SIGNIFICANCE	9
10.3.3.1 THREATENED AND ENDANGERED SPECIES	9
10.4 EXPECTED IMPACTS OF MINING OPERATIONS ON FISH AND WILDLIFE	10
10.5 MITIGATION AND MANAGEMENT PLANS	10
10.7 FISH AND WILDLIFE MONITORING	10
10.8 BIBLIOGRAPHY	11
10.9 CHAPTER X - PLATES (FIGURES AND TABLES)	14
Figure 1. Crandall Creek with sampling stations shown	15
Figure 2. Modified Surber Sampler	16
Table 1. Resource description for Crandall Creek, Station CC01, 30 Oct 80	17
Table 2. Mcroinvertebrate community data, Crandall Creek, Stns CC01 & CC02	18
Table 3. Resource description for Crandall Creek, Station CC02, 30 Oct 80	20
Table 4. Resource description for Upper North Fork Crandall Creek, 30 Oct 80	21
Table 5. Resource description for Upper South Fork Crandall Creek, 30 Oct 80	22

10.1 SCOPE

The selected property designated for the Crandall Canyon Mine is located mainly north and west of Crandall Canyon, a tributary to Huntington Creek, Emery County, Utah. The mine lease property is within T15,16S and R6,7E, Utah, Rilda Canyon, Utah Quadrangle (USGS Map N3922.5-W11107.5/7.5, 1979).

Crandall Creek is a small perennial stream with flows less than 1 cfs most of the year (0.5 to 0.7 cfs, 31 May to 4 June 1977; 0.3 to 0.8 cfs, 8-12 November 1976; Vaughn Hansen Associates, 1977). The stream is approximately 7 km (4.5 miles) long beginning at approximately 3,150 m (9,700 ft) elevation and flowing eastward to its mouth at the confluence with Huntington Creek, 2,385 m (7,350 ft) elevation. The canyon gradient as reported by Vaughn Hansen Associates is 125 m/km (660 ft/mile) or 12.5 percent but the average stream gradient from the upper forks downstream to the mouth is approximately 60 m/km. (320 ft/mile) or 6 percent.

Crandall Creek has not been classified as a game fisheries stream by the Utah Division of Wildlife Resources due to its small size and lack of suitable spawning gravels (substrates are cemented together). Crandall Creek is a tributary to Huntington Creek, one of the few high quality trout streams of Utah, and as such should be protected from any water quality or physical habitat degradation.

The following aquatic resource description is based upon: 1) information presented in the 1968 Hydrological Atlas of Utah (Jeppson, Ashcroft, Huber, Skogerboe and Bagley, 1968); 2) a report prepared by Vaughn Hansen Associates (1977) on "Water Quality and Hydrological Study in the Vicinity of Huntington Creek Mine No. 4 and Little Bear Spring"; and 3) on-site surveys by Robert N. Winget Environmental Consultants on 23 July and 30 October 1980. Water quality, physical habitat and stream biota are all important components of aquatic resources.

Water quality and hydrology are discussed in more detail in another chapter. In this chapter resource quality is based mainly upon aquatic macroinvertebrate community data with water quality and habitat descriptions used as support data.

Even in streams not capable of supporting fisheries, stream macroinvertebrates are excellent indicators of stream quality (Cairns, 1970, 1977; Cairns, Dickson and Herricks, 1975; Cairns, Lanza, Sparks and Waller, 1973; Ghetti and Bonazzi, 1977; Hunt, 1976; Olive, 1976; Reichert, 1973; Resh and Unzicker, 1975; Wilhm and Dorris, 1968). Aquatic macroinvertebrate taxa each respond to environemntal conditions according to their individual morphology, physiology and behavior. Differences in macroinvertebrate communities result from differences in water quality (Altman and Dittmer, 1966; Cairns, Dickson and Herricks, 1977; Hart

and Fuller, 1974; Hynes, 1961; Macan, 1974); water temperature (Altman and Dittmer, 1966; AFS, 1976; Hooper, 1973; Hynes, 1972; Jones, 1972; Williams and Winget, 1979); upstream land and/or water use (Bakke, 1977; Cairns et al., 1975; Platts, 1979; Ringler and Hall, 1975); stream gradient and/or elevation (Baumann, Gaufin and Surdick, 1977; Hynes, 1972; Macan, 1973; Reice, 1977; Stoneburner, 1977; STout and Vandermeer, 1975); or a combination of these and other factors. The range of environmental conditions each taxon can inhabit has been called that taxon's niche width or breadth (Colwell and Futuyma, 1971; Pielou, 1972).

Stream quality characteristics are often not fully or accurately evaluated using physical or chemical analyses alone. Biological evaluations using macroinvertebrates verify a stream's quality by defining the stream's suitability for supporting life, including a trout fishery. The biota are also the best indicators of subtle changes over time in water quality or physical stream habitat, including reduced flows, increased sedimentation or degraded water quality.

10.2 METHODOLOGY

Stream Channel

This portion of the inventory provided information on the physical resources available to the biota of Crandall Creek (Tables 1, 3, 4 and 5). Measurements included stream bank, riparian zone and watered channel measurements. Measurements were taken at the four stations shown in Figure 1. Methods used were taken from those used by the U.S. Forest Service, Intermountain Region and U.S. Bureau of Land Management, Utah District in their aquatic resource inventories. Preliminary stream channel field surveys (inventory phase) were completed 30 October 1980.

Stream Bank. At each station (Figure 1) a 100 m length of each stream bank was classified as to landform gradient; vegetative types and percent cover; stability; and types and extent of ungulate perturbation.

Riparian Zone. At each station (Figure 1) a 100 m length of stream section was classified as to width of riparian zone (that zone adjacent to the stream with vegetative community types different from that on the adjoining hillsides -- e.g. willows, meadow grass/herbs); gradient of riparian zone and adjoining hillsides; vegetative types and percent cover; and types and extent of perturbations.

Watered Channel. Channel measurements taken included channel gradient, substrate composition (line transect method rather than the McNeil core sampler due to the cemented nature of the sediments); water and channel width (low and tall bank width); water depth, velocity and discharge; and amount and quality of spawning gravels.

Fisheries. It is proposed that the fish of Crandall Creek not be sampled due to obvious lack of reproduction habitat (all gravels are cemented together). Water quality, habitat and macroinvertebrate surveys should be adequate in providing information necessary to insure protection of the limited fishery of Crandall Creek.

Macroinvertebrate Communities. Four quantitative macroinvertebrate benthic samples were taken from stations CC01 and CC02 (Figure 1) according to the stratified random criteria for selection of specific sample sites (EPA, 1973). A modified Surber sampler (Figure 2) was used to take the samples; samples were floated in a saturated salt water (NaCl) solution in the field to separate organisms from sand and gravel; samples were preserved in 10% formalin and transported to the laboratory for processing.

Samples were hand processed with macroinvertebrates sorted from sample debris using a stereo zoom Nikon binocular microscope; organisms were sorted and enumerated by taxonomic

group (most to genus and species but some only to family level); sample organisms were then be dried and weighed.

Analysis of sample results (Table 2) included mean number for each taxon and total sample numbers per station per date; standard deviation of the total mean number; coefficient of variation; mean dry weight per sample; number of taxa per station; dominance diversity (H, Shannon-Weaver); and tolerance quotients for each taxon (TQ), community tolerance quotient CTQ_a and biotic condition index (BCI).

The tolerance quotient is a value assigned each taxon based upon its tolerance and selectivity for various substrate materials, stream gradients, levels of alkalinity and sulfate concentrations. TQ's range from 2 (very fragile, narrow tolerance limits) to 108 (wide tolerance limits for all 4 parameters). The CTQa is the arithmetic mean of the tolerance quotients (TQ) of the actual taxa of macroinvertebrates sampled from the stream station on the given date. The higher the CTQ_a value the larger the ratio of tolerant species to more environmentally fragile species. The CTQ_p is a predicted community tolerance quotient indicating what can be expected from a community inhabiting a stream such as Crandall Creek. The BCI is merely an indication of percent of predicted for the actual community given existing water quality and habitat characteristics for the stream in question. The TQ, CTQ_a and CTQ_p was taken from a US forest service publication authored by Winget and Mangum (1979).

The macroinvertebrate community for Huntington Creek has been intensively sample by Winget for nearly 10 years. His studies are still in progress and will continue for several more years. Results of Winget's study provide a sound data base for the receiving waters, Huntington Creek. According to Mr. John Livesy, Utah Division of Wildlife Resources, Price Office (personal communicatiion, 22 August 1980) the main concern over developing the coal resources of Crandall Canyon is the potential impact on Huntington Creek, a prime trout fishery. Therefore, the available baseline data on Huntington Creek is important to the Crandall Canyon project and will be used in evaluating any suspected impacts when the need arises.

10.3 EXISTING FISH AND WILDLIFE RESOURCES

10.3.2.1 AQUATIC WILDLIFE AND HABITAT AND VALUE DETERMINATION

Crandall Canyon is a narrow, steep canyon with little meander room for the stream in the canyon bottom. There has historically been heavy cattle grazing pressures on the grassy and tender herb and shrub vegetation found mainly in the limited riparian zone lining each side of the stream. This has resulted in 25 to 40 percent unstable stream banks with erosion and sloughing bank materials common. The present dominant riparian vegetation consists of mature trees and shrubs. Over half of the stream is shaded, either by tall vegetation or steep bank materials.

Large boulders, some over 2 m (6 ft) in diameter are common in the stream channel and adjoining it, providing a potential for deep, covered pool habitat.

Sometime in the recent past, a mineral spring flowed into Crandall Creek, as evidenced by a large marl deposit (dam) near the lower forks. The spring is no longer active but a mineral water influence (cemented substrates) is still apparent in Crandall Creek. Vaughn Hansen Associates (1977) reported that water quality in Huntington Canyon tributaries deteriorates in a north to south and west to east direction, and Crandall Creek has better water quality than those tributaries to the south. They reported sulfate concentrations in Crandall Creek of 27 to 40 mg/l, TDS of 390 to 450 mg/l, bicarbonate alkalinity of 263 to 312 mg/l, chloride of 1.5 to 6 mg/l, and iron (total) of 0.05 to 0.16 mg/l. None of these water quality parameters exceed state limits for drinking waters, nor are high enough to alone account for the cemented substrates of Crandall Creek. Water quality of Huntington Creek is similar to that of Crandall Creek with sulfate concentrations generally of 20 to 80 mg/l, TDS of 180 to 400 mg/l, bicarbonate alkalinity of 200 to 270 mg/l, chloride of 1 to 15 mg/l, and iron (total) of 0.05 to 2.5 mg/l.

Water temperatures are similar to those in Huntington Creek with no evidence of any warm water springs. Water temperatures range from a near uniform 0-1° C from November through March each year. Summer water temperatures commonly have a diurnal fluctuation of 10-15° C per day with maximum temperatures near 20° C.

Crandall Creek has a drainage area of approximately 769 to 1,010 ha (1900 to 2500 acres). The stream bisects mostly Castle Gate, Blackhawk and Star Point Sandstone. North Horn and Price River formations form the majority of the high canyon above the source of the active surface stream flows.

According to Vaughn Hansen Associates (1977), water flows in upper Crandall Canyon are intermittent with flows originating as interflow which surfaces above or near the Castle Gate Sandstone-Blackhawk Formation interface and/or overland flow -- interflow dominating during spring runoff season while overland flow is most common during the summer thundershower period. VHA also reported springs in the Crandall Canyon area surface primarily above and below the Blackhawk Formation, with little groundwater activity showing in the Blackhawk.

Jeppson, Ashcroft, Huber, Skogerboe and Bagley (1968) reported approximately 7.9 cm (20 inches) annual precipitation normally occurring in the Crandall Canyon area. They also reported a potential evapotranspiration of 7.1 to 7.9 cm (18 to 21 inches) per year. Most precipitation in Crandall Canyon falls as winter snow.

Crandall Canyon, having steep slopes with exposed soils, carries fairly heavy sediment loads during high runoff periods, but due to the steep gradient and high velocities, stream substrates are largely free of fine sediments. In fact, the dominant substrate is gravel-rubble comented together with mineral deposits, probably Ca and Mg combined with mostly carbonates and sulfates.

There was little known, biologically, about Crandall Creek prior to the 1980 surveys. There have been fish observed in lower Crandall Creek, but approximately 1.0 km (0.6 mile) upstream of the Canyon mouth are some high barriers, above which no fish have been observed. There are no loose spawning gravels in Crandall Creek indicating a probable lack of spawning. The fish probably swim upstream from Huntington Creek each spring but are unable to successfully reproduce. Huntington Creek is one of the higher quality trout streams of Utah.

Station CC01

Stream Habitat. A summary of the physical habitat of Crandall Creek at Station CC01 (Figure 1) is presented in Table 1. The lower 2 km of Crandall Creek had fairly uniform habitat as previously described. The stream channel at Station CC01 has a steep gradient (4.5%) that partialy accounts for the presence of rubble (35%) and gravel (30%) in such high proportions. These substrates on 30 October 1980 had a covering of fine silt that a crust had started to form over from chemical deposition. This silt layer had resulted in a sparse algal growth on the rocks. The macroinvertebrate community of Station CC01 (Table 2) also showed the impact of this silt covering on the substrates with only 8,484/m^2 organisms compared with 39,304/m^2 upstream at Station CC02.

In general Crandall Creek at this station is in a high gradient, narrow channel, steep sided canyon. Cattle grazing during the summer of 1980 had resulted in close-cropped grasses and young herbs and forbs. This practice over the years has resulted in relatively unstable stream banks causing moderate siltation of the substrates. The stream has limited potential for improvement - controlled animal use of the riparian areas would reduce sedimentation but cementing of the substrates would still limit the biotic potential.

Aquatic Macroinvertebrates. Table 2 contains a summary description of the aquatic macroinvertebrate community of Crandall Creek at Stations CC01 and CC02 on 30 October 1980. Samples from Station CC01 contained a diverse assemblage of taxa (31) including several with fairly narrow environmental tolerances (TQ<36). The presence of *Ephemerella grandis*, *Pteronarcella badia* and *Isogenoides zionensis* reflects the community of Huntington Creek as these species are common in the larger receiving stream but were absent from the October samples from the upstream station.

Lower Crandall Creek macroinvertebrate community in October exhibited signs of somewhat lower water quality than at upper Crandall Creek (Station CC02) - absence of *Arctopsyche* and *Parapsyche* caddisflies plus reduced numbers of several taxa. The overall community composition (CTQ_a) on 30 October 1980 was 94% (BCI) of the predicted potential (CTQ_p) for that stream section. This supports the forementioned conclusion that the potential for improvement of this stream section for aquatic life is limited. It also points out the high quality of this stream considering the limited resources (low flows and chemical deposition) and as such should be protected from further perturbation.

Station CC02

Stream Habitat. Table 3 presents a summary description of the stream habitat at Station CC02 on 30 October 1980. The total channel was wider than at Station CC01 (40 ft compared with 20 ft) and stream gradient was greater (5.0% compared with 4.5%). There was more bedrock and less sand and silt at Station CC02. Stream banks were more stable and the riparian vegetation zone was wider at Station CC02 compared with Station CC01. The stream was still in a steep, narrow channel with steep banks. Cattle grazing had produced an apparent absence of tall grass; rather the vegetation was cropped close to the ground. Bank erosion was evident as land sloughs up to 40 ft wide and 30-45 ft high. Stream substrates did not have the covering of silt that was evident at Station CC01.

Aquatic Macroinvertebrates. Table 2 presents sampling data for 30 October 1980. The presence of *Parapsyche* indicates a dependance upon headwater springs for the majority of low-flow waters in upper Crandall Creek. *Parapsyche*, *Arctopsyche*, *Epeorus*, *Zapada cinctipes*, plus other taxa with

low TQ values, indicate relatively high water quality, perennial flows and good habitat at Station CC01. The BCI of 94 indicates the community is near its predicted potential as far as composition is concerned. The high numbers and relatively even distribution of numbers over types (H=3.46) support the conclusion that on 30 October 1980 the aquatic macroinvertebrate community at Station CC02 was in good condition.

Stations UPNF and UPSF

These 2 stations were selected as photo and occular habitat monitoring stations only. Summary descriptions of the physical resources at each station on 30 October 1980 are presented in Tables 4 and 5. Upper south fork is spring fed a short distance above the confluence with upper north fork. Above the springs the stream is reportedly intermittent. Substrates in both forks were covered with chemical deposition but not as strongly cemented together as at Stations CC01 and CC02 downstream. There were also heavier algal growths on the rocks at these upper stations than at the lower 2 stations.

Channels at Stations UPNF and UPSF were narrow with steep sides as at the lower stations. The channel in UPSF was narrower with more large rocks and dead timber fall than in UPNF that had a more open flat bottom channel, although not very wide and stream banks were near vertical 15 to 20 feet. Grazing impacts on the riparian communities were visible on both forks.

10.3.3 SPECIES OF SPECIAL SIGNIFICANCE

10.3.3.1 THREATENED AND ENDANGERED SPECIES

Official USF&WS Section 7 opinions relating to the aquatic resources of Huntington and Eccles Canyon drainages have indicated that no threatened or endangered species of fish or other aquatic organisms have been found in waters upstream of the lowest 2 or 3 miles of the Price or San Rafael Rivers. The organisms of Crandall Creek, as presently known are all common and widely distributed throughout streams of Utah. There are found in Crandall Creek representatives of several taxa limited to high quality environs, but none, as far as is presently known, are rare in the intermountain region.

10.4 EXPECTED IMPACTS OF MINING OPERATIONS ON FISH AND AQUATIC WILDLIFE

Crandall Creek,as a habitat for aquatic wildlife other than fish, is a quality stream and as such should be protected from impacts of the proposed Crandall Canyon Mine Project. There is no planned disturbance of Crandall Creek at present with: the access road alignment planned far enough above the stream so as to avoid sedimentation or realignment perturbations; and mine portal is planned for an off-stream site. There could possibly be run-off problems from the road and/or portal, especially during active surface disturbance activities. Crandall Creek could possibly be impacted from surface run-off sediments, but this should not be a serious problem if sediment control quidelines are followed. Potential subsidence areas are mainly above perennially watered stretches of Crandall Creek and headwater tributaries, thus no impacts from subsidence on the biota of Crandall Creek are expected. Proposed monitoring should elucidate any impacts that may occur, including those associated with reduced stream flows caused by intersection of source aquifers. .

10.5 MITIGATION AND MANAGEMENT PLANS

Since no impacts are expected to the perennial waters of Crandall Canyon in the near future, no special mitigation plan concerning Crandall Creek is presented here. Crandall Creek will be monitored for habitat value and biotic community condition for the next 2 years, spring and fall samplings, in order to acquire a baseline description of the resource. This baseline will provide solid grounds for future impact analysis and mitigation planning if the need arises.

10.7 FISH AND WILDLIFE MONITORING

Crandall Creek is a quality stream and as such should have a baseline description of its habitat and biota. Aquatic macroinvertebrate samples will be taken each spring (April-May) and fall (October-November) during 1981 and 1982. Habitat measurements as presented in Tables 1, 2, 3, and 5 of this report will be made at the same time as the biological samples. Data collected will be correlated with water quality and hydrology measurements discussed under another chapter of this report. If impacts should become evident in the drainage area of Crandall Creek in the future, monitoring of aquatic macroinvertebrates and habitat changes will be started again, using previously collected data as the base for impact evaluation.

10.8 BIBLIOGRAPHY

REFERENCES CITED

Altman, P.L. and D.S. Dittmer. 1966. Environmental Biology. Federation of American Societies for Experimental Biology. 694 pp.

American Fisheries Society. 1976. Instream Flow Needs, Volumes I and II. ed. J.F. Orsborn and C.H. Allman. 551 and 657 pp. respectively.

Bakke, B.M. 1977. Grazing is destroying our fish. Conserv. Feb.-Mar. pp. 31-34.

Baumann, R.W., A.R. Gaufin and R.F. Surdick. 1977. The Stoneflies of the Rocky Mountains. Memoirs of Amer. Entomol. Soc. No. 31. 208 pp.

Cairns, J.Jr. 1970. New concepts for managing aquatic life systems. Water Poll. Contr. Fed., J. 42(1):77-82.

_____. 1977. Aquatic ecosystem assimilative capacity. Fisheries 2(2):5-7.

_____, K.L. Dickson, and E.E. Herricks. 1975. Recovery and Restoration of Damaged Ecosystems. Univ. Press of Viriginia. ISBN 0-8139-0676-8. 531 pp.

_____, G.R. Lanza, R.E. Sparks and W.T. Waller. 1973. Developing biological information systems for water quality management. Water Resources Bull. 9(1):81-99.

Colwell, R.K. and D.J. Futuyma. 1971. On the measurement of niche breadth and overlap. Ecology 52(4):567-576.

Environmental Protection Agency. 1973. Biological Field and Laboratory Methods for Measuring the Quality of Surface Waters and Effluents. C. I. Weber editor. EPA-670/4-73-001.

Ghetti, P.F. and G. Bonazzi. 1977. A comparison between various criteria for the interpretationn of biological data in the analysis of the quality of running water. Water Res. 11:819-831.

Hart, C.W. and S.L. Fuller, ed. 1974. Pollution Ecology of Freshwater Invertebrates. Acad. Press, Inc., New York. ISBN 0-12-328450-3.

Hooper, D.R. 1973. Evaluation of the Effects of Flows on Trout Stream Ecology. Department of Engineering Research. Pacific Gas & Electric Co., Emeryvile, Ca. 94608. 97 pp.

Hunt, R.L. 1976. A long-term evaluation of trout habitat development and its relation to improving management-related research. Amer. Fish. Soc., Trans. 105(3):361-364.

Hynes, H.B.N. 1971. The Biology of Polluted Waters. University of Toronto Press, Toronto. 202 pp.

_____, 1972. The Ecology of Running Waters. Univ. of Toronto Press, Toronto. 555 pp.

Jeppson, R.W., G.L. Ashcroft, A.L. Huber, G.V. Skogerboe, and J.M. Bagley, 1968. 1968 Hydrological Atlas of Utah. Utah Water Resources Laboratory and Utah Department of Natural Resources PRWG 35-1. Utah State University.

Jones, S. 1972. Silt pollution: a new term for an old problem. Mo. Conserv. pp. 4-7.

Lowe, K. H. Jr. and W. G. Heath. 1963. Thermoperiodism in the sea-run cutthroat trout (Salmo clarkii clarkii). J. Ariz. Acad. Sci.

Macan, T.T. 1974. Freshwater Ecology. John Wiley & Sons, New York. 343 PP.

Olive, J.J. 1976. Chemical-physical and biological assessment of water quality in the Cuyahoga River (1973-1974). The Ohio J. of Sci. 76(1):5-15.

Pielou, E.C. 1972. Niche width and niche overlap: a method for measuring them. Ecology 53(4):687-692.

Platts, W.S. 1979. Livestock grazing and riparian/stream ecosystems -- an overview. Forum -- Grazing and Riparian/Stream Ecosystems. O.B. Cope, ed. Trout Unlimited, Inc. pp. 39-45.

Reice, S.R. 1977. The role of animal associations and current velocities in sediment-specific leaf litter decomposition. Oikos 29:357-365.

Reichert, M. 1973. The Use of Macroinvertebrates as Indicators of Water Quality. Unpublished M. S. Thesis, Brigham Young University, Provo, Utah. 284 +xvi pp.

Resh, V.H. and J.D. Unzicker. 1974. Water quality monitoring and aquatic organisms: the importance of species identification. Water Poll. Contr. Fed. J., 47(1):9-16.

Ringler, N.H. and J.D. Hall. 1975. Effects of logging on water temperature and dissolved oxygen in spawning beds. Amer. Fish. Soc., Trans. 104(1):111-121.

Stoneburner, D.L. 1977. Preliminary observations of the aquatic insects of the smokey mountains: altitudinal zonation in the spring. Hydrobiologia 56(2):137-143.

Stout, J. and J. Vandermeer. 1975. Comparison of species richness for stream-inhabiting insects in tropical and mid-latitude streams. Amer. Natur. 109:263-280.

Vaugh Hansen Associates, 1977. Water Quality and Hydrologic Study in the Vicinity of Huntington Creek Mine No. 4 and Little Bear Spring. Report submitted to Swisher Coal Company, August 1977. 22 pp + iii + Appendices A & B.

Welch, E. B. and T. A. Wojtalik. 1968. Some effects of increased water temperature on aquatic life. TVA, Div. of Hlth. and Safety, Water Qual. Branch, Chattanoga, Tennessee, July 1968.

Wilhm, J.L. and T.C. Dorris. 1968. Biological parameters for water quality criteria. Bio. Sci. 18:477-481.

Williams, R.D. and R.N. Winget. 1979. Effects of flow manipulation on macroinvertebrate communities in Strawberry River, Utah, in "The Ecology of Regulated Streams" edited by J. V. Ward and J. A. Stanford. Proceedings of symposium sponsored by The North American Benthological Soc. and The Nat'l. Sci. Found. held in Erie, Pa. 18-20 April 1979. Plenum Press 1979, pp. 365-376.

Winget, R.N. 1980. Macroinvertebrate community analysis of seven Uinta Mountain streams, 1976-1981. Unpublished report, under contract with Water and Power Resources Service, Provo Office, Utah.

_____, and F.A. Mangum, 1980. Biotic condition index: Integrated biological, physical, and chemical stream parameters for management. In "Aquatic Ecosystem Inventory" series of the U.S. Forest Service, Intermountain Region, October 1979. iii + 51 pp.

10.9 CHAPTER X. FIGURES AND TABLES

FIGURES

Figure 1. Crandall Creek with sampling stations shown 15
Figure 2. Modified Surber Sampler 16

TABLES

Table 1. Resource description for Crandall Creek, Station CC01, 30 Oct 80 17
Table 2. Mcroinvertebrate community data, Crandall Creek, Stns CC01 & CC02 18
Table 3. Resource description for Crandall Creek, Station CC02, 30 Oct 80 20
Table 4. Resource description for Upper North Fork Crandall Creek, 30 Oct 80 21
Table 5. Resource description for Upper South Fork Crandall Creek, 30 Oct 80 22

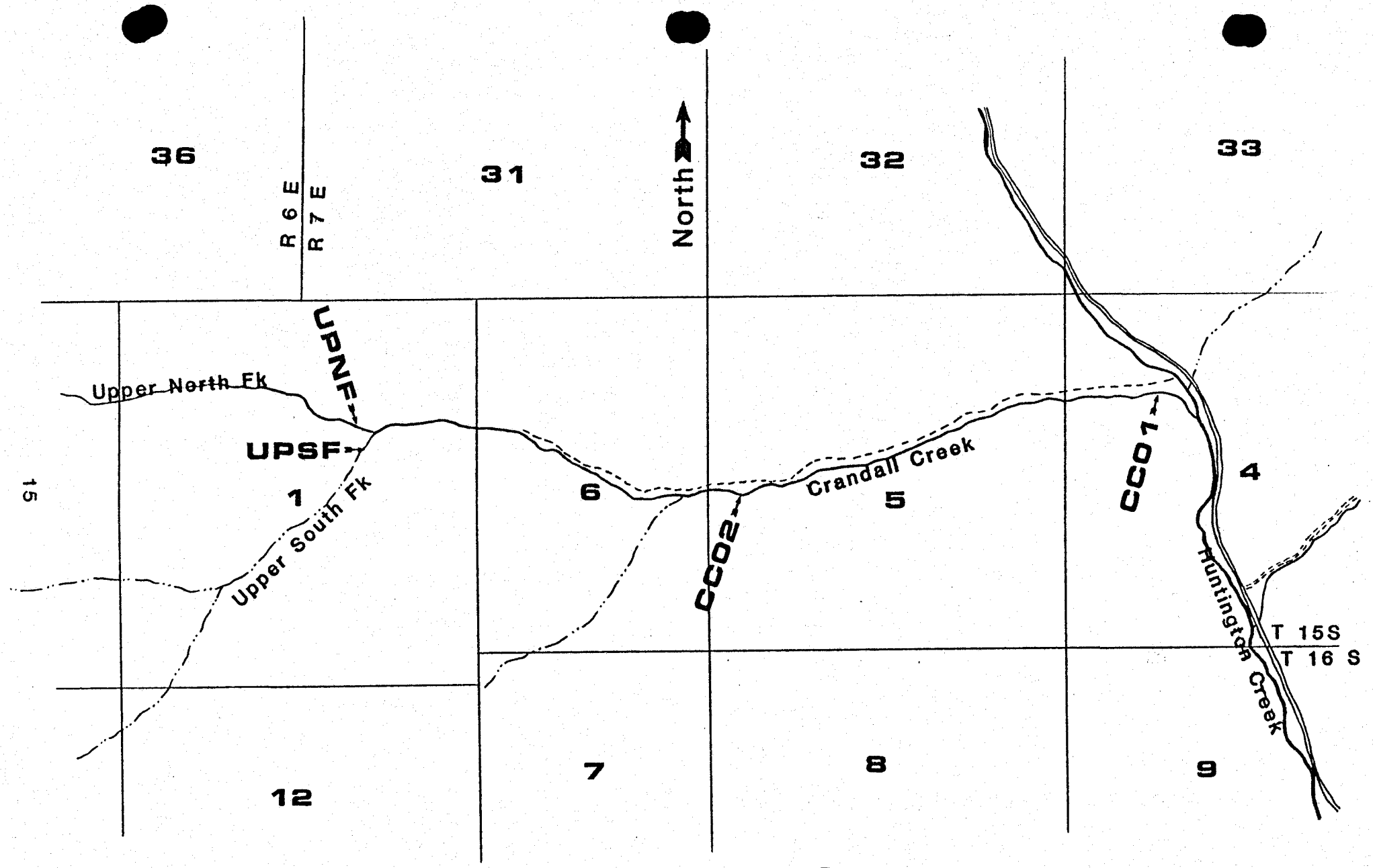
36
31
32
33
R 6 E
R 7 E
North
UPNF
Upper North Fk
UPSF
1
Upper South Fk
6
CCO2
Crandall Creek
5
CCO1
4
Huntington Creek
T 15S
T 16 S
12
7
8
9

FIGURE 1.

Figure 2.
Modified Surber Sampler

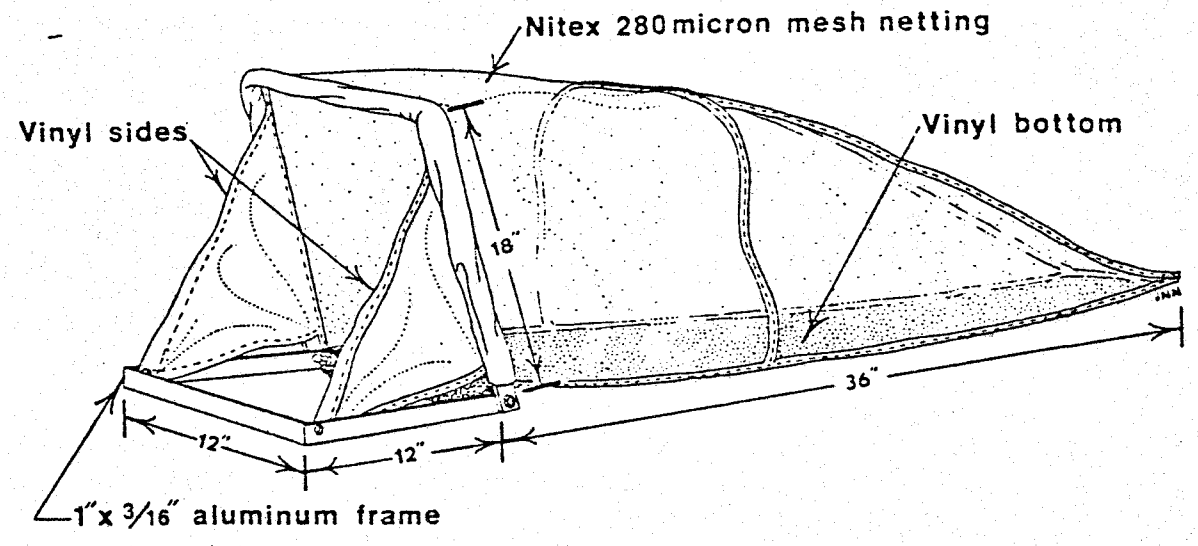

Benthic samples were taken with a Surber sampler (Surber, 1937), modified by Winget (1971) as shown. The intake opening is 30 cm (12 inches) wide by 45 cm (18 inches) high and the bag is 91 cm (3 feet) long. The standard Surber sampler is only 30 cm (12 inches) high with a 62 cm (2 feet) long bag. The modified sampler was designed with a larger collecting bag to prevent excessive backwash and loss of contents when collecting in deep, swift streams.

Table 1. Resource description of Crandall Creek, Emery County, Utah, at Stn CC01 on 30 October 1980.

Water Surface (Q=0.7cfs)		
mean water width: 4.8 ft; range		
mean water depth: 0.2 ft; range 0.1 to 0.8 ft		
mean water velocity: 0.7 ft/sec; range 0 to 1.8 ft/sec		
Channel		
Total width: mean 20 ft; range 16 to 31 ft		
Substrates:	boulder (>12in diam)	5%
	rubble (3-12in diam)	35%
	gravel (.1-3in diam)	30%
	sand	15%
	silt	10%
	clay	0%
Gradient: mean 4.5%		
Left Bank		
	cover	75%
	stability	55%
	class	low shrubs and grass
	gradient	5%
	ungulate damage	50%
	riparian zone	7 ft
Right Bank		
	cover	78%
	stability	35%
	class	trees and shrubs
	gradient	54%
	ungulate damage	25%
	riparian zone	4 ft

Table 2. Macroinvertebrate community data as mean number/m^2 for Crandall Creek, Emery County, Utah. Samples taken 30 October 1980.

Taxa	Station CC01	CC02	TQ
Nematoda	11	161	108
Planorbidae	--	11	108
Oligochaeta	75	387	108
Turbellaria	65	1,724	108
Hydracarina	2,701	4,713	108
Copepoda	11	786	108
Ostracoda	495	1,410	108
Collembola	--	54	108
Ephemeroptera			
Ameletus	54	97	48
Baetis	1,431	6,273	72
Cinygmula	1,130	1,883	21
Epeorus	108	581	21
Ephemerella grandis	75	--	24
Ephemerella inermis	--	65	48
Plecoptera	54	--	48
Nemouridae	--	10,351	36
Zapada cinctipes	54	764	16
Megarcys signata	--	75	24
Capniidae	151	1,442	32
Pteronarcella badia	89	--	24
Isogenoides zionensis	13	--	24
Isoperla	161	377	48
Chloroperlidae	--	97	24
Trichoptera			
Rhyacophila	11	409	18
Arctopsyche	--	43	18
Hydropsyche	678	89	108
Parapsyche	--	22	6
Oligophlebodes	--	22	24
Brachycentrus	11	--	24
Coleoptera			
Elmidae	334	11	108

Table 2. Continued (Crandall Creek).

Taxa	Station CC01	CC02	TQ
Diptera			
Antocha monticola	118	54	24
Dicranota	226	65	24
Ormosia	11	--	72
Holorusia grandis	--	3	72
Pericoma	22	183	36
Simuliidae	11	4,422	108
Chironomidae	269	2,443	108
Ceratopogonidae	22	11	108
Euparyphus	11	--	108
Hemerodromia	75	280	108
Mean Number/m^2	8,484	39,304	
Standard Dev.	3,354	23,722	
Coeff. of Var.	40	60	
Mean Dry Wt. gm/m^2	2.1	2.2	
Number of Taxa	31	33	
H (Shannon-Weaver)	3.33	3.46	
CTQ_a	64	64	
CTQ_P	60	60	
BCI	94	94	

Table 3. Resource description of Crandall Creek, Emery County, Utah, at Stn CC02 on 30 October 1980.

Water Surface (Q=0.4cfs)		
mean water width:	4 ft	
mean water depth:	0.2 ft; range 0.1 to 1.1 ft	
mean water velocity:	0.6 ft/sec; range 0 to 1.6 ft/sec	
Channel		
Total width:	mean 40 ft; range 25 to 55 ft	
Substrates:	boulder (>12in diam)	20%
	rubble (3-12in diam)	35%
	gravel (.1-3in diam)	25%
	sand	10%
	silt	5%
	clay	0%
Gradient: mean 5.0%		
Left Bank		
	cover	65%
	stability	65%
	class	shrubs and trees(sparse)
	gradient	30%
	ungulate damage	50%
	riparian zone	12 ft
Right Bank		
	cover	75%
	stability	50%
	class	trees and shrubs
	gradient	32%
	ungulate damage	25%
	riparian zone	7 ft

Table 4. Resource description of Crandall Creek, Emery County, Utah, at Stn UPNF on 30 October 1980.

Water Surface (Q=0.15cfs)		
mean water width: 2.5 ft; range 2.0 to 3.6 ft		
mean water depth: 0.1 ft; range 0 to 0.3 ft		
mean water velocity: 0.5 ft/sec; range 0 to 0.8 ft/sec		
Channel		
Total width: mean 25 ft		
Substrates:	boulder (>12in diam)	15%
	rubble (3-12in diam)	30%
	gravel (.1-3in diam)	30%
	sand	10%
	silt	5%
	clay	5%
Gradient: mean 5.5%		
Left Bank		
	cover	50%
	stability	50%
	class	grass + shrubs
	gradient	35%
	ungulate damage	50%
	riparian zone	8 ft (1-10 ft)
Right Bank		
	cover	75%
	stability	50%
	class	trees + shrubs
	gradient	37%
	ungulate damage	25%
	riparian zone	7 ft (1-10 ft)

Table 5. Resource description of Crandall Creek, Emery County, Utah, at Stn UPSF on 30 October 1980.

Water Surface (Q=0.2cfs)

mean water width: 2.5 ft; range 1.8 to 3.3 ft
mean water depth: 0.15 ft; range 0 to 0.5 ft
mean water velocity: 0.6 ft/sec; range 0 to 1.1 ft/sec

Channel

Total width: mean 15 ft

Substrates:	boulder (>12in diam)	30%
	rubble (3-12in diam)	35%
	gravel (.1-3in diam)	25%
	sand	5%
	silt	0%
	clay	0%

Gradient: mean 7.0%

Left Bank		
	cover	75%
	stability	50%
	class	trees + shrubs
	gradient	35%
	ungulate damage	50%
	riparian zone	5 ft (4-8 ft)
Right Bank		
	cover	75%
	stability	38%
	class	trees + shrubs
	gradient	32%
	ungulate damage	25%
	riparian zone	5 ft (3-10 ft)