# Appendix 5-13

## Coal Silo Calculations

Savage
INDUSTRIES, INC.
5250 South 300 West
Suite 200
Salt Lake City, Utah 84107
(801) 263-9400
FAX (801) 261-8766

August 29, 1990

Mr. Randall Ralphs
Genwal Coal Company
195 West 100 North
Huntington, Utah 84528

Dear Randall;

Enclosed are the certified drawings and structural calculations for the coal storage silo at your mine facility.

The silo shell and structural support steel have been fabricated and installed in accordance with the calculations and drawings attached.

The as built (size C) drawing is correct for the dimensions, horsepower and equipment currently on the mine property as operating.

I hope this information will give you what you need for your files. Should you need any further information please feel free to contact me.

Sincerely,

Mike Wolfley

MW/sma

SHEET 1 OF

SUBJECT 530 T HUNTINGTON SILOS JOB NO.

FILE NO.

TNE DATE 12-17-87 CHECKED BY DATE

COAL 50 PCF

$\phi = 37°$

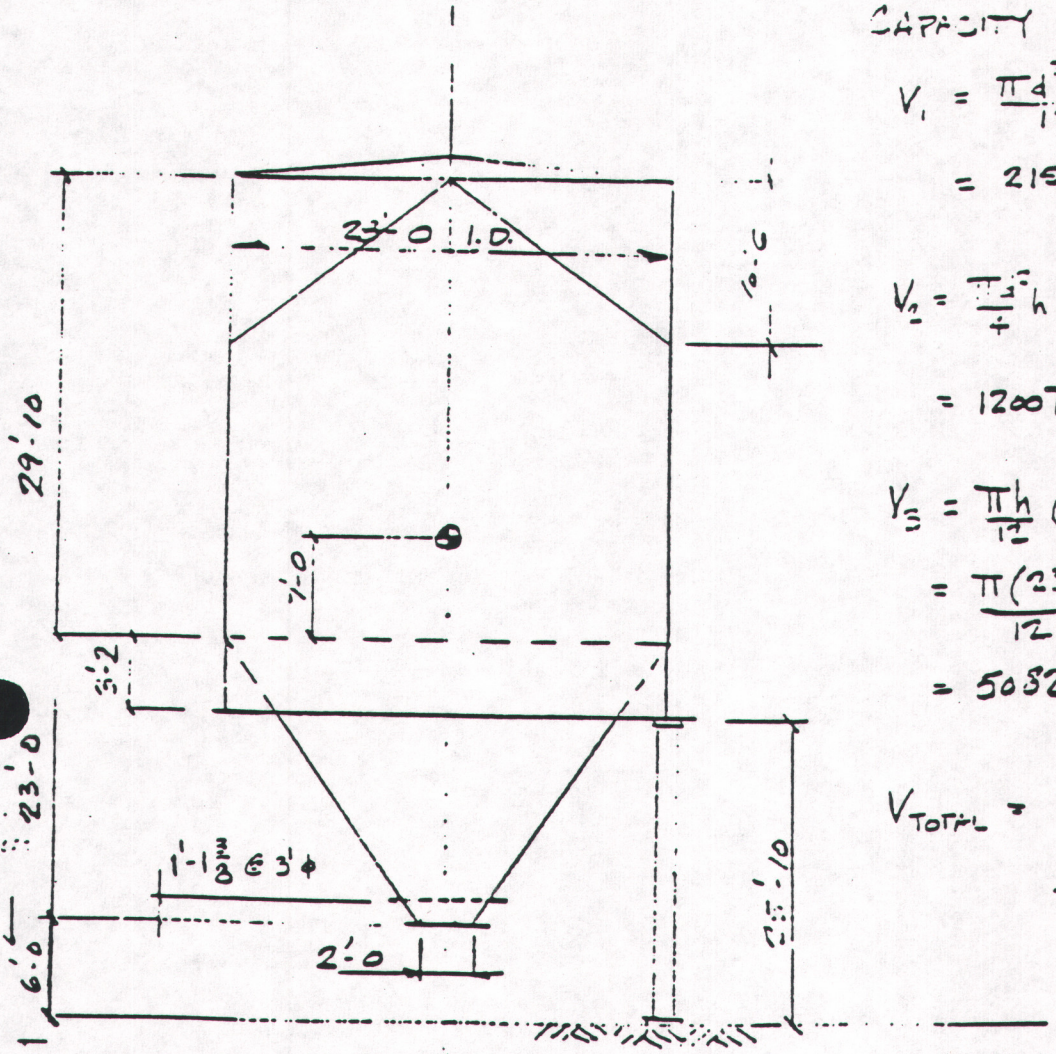


CAPACITY

$$V_1 = \frac{\pi d^2 h}{12} = \frac{(\pi)(23)^2(10.5)}{12}$$

$$= 2155 \text{ CF}$$

$$V_2 = \frac{\pi d^2}{4} h = \frac{\pi(23)^2(23-10.5)}{4}$$

$$= 12007 \text{ CF}$$

$$V_3 = \frac{\pi h}{12}(d^2 + dd' + d'^2)$$

$$= \frac{\pi(23)}{12}(23^2 + 23(2) + 2^2)$$

$$= 5052 \text{ CF}$$

$V_{TOTAL}$ = 19244 CF

× 50 PCF

481 TONS

= 962,200 #

CENTER OF GRAVITY

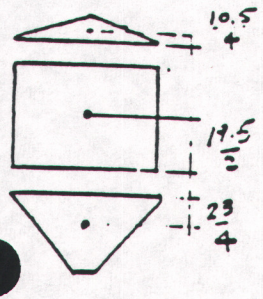


$$CG = \frac{V_1 h_1 + V_2 h_2 + V_3 h_3}{V_{TOTAL}} = \frac{(2155)(22.125) + (12007)(9.75) + (5052)(-5.75)}{19244}$$

CG = 7 FT ABOVE CONE-CYL JUNCTION

WIND: 80 mph, EXPOSURE C.

$$p = C_e C_q q_s I = 1.6(0.8)17(1) = 22 \text{ PSF}$$

PROJECTED AREA = 30 (2'-0") + 23(2'-0")/2 = 1,162 $FT^2$

$$V_W = 1{,}162(22) = 26^K$$

DEAD LOAD = $90^K$ (FAN DWG + ROOF)
LIVE LOAD = 55 PSF (19,244) = $1{,}060^K$ DL+LL = $1{,}150^K$
SNOW LOAD = 30 PSF ($\pi 14^2$) = $19^K$

SEISMIC: ZONE 3 $Z = .3$ $C = 2.75$ $R_W = 6$ $I = 1.0$

$$V = \frac{ZIC}{R_W} W = (.3)(1)\left(\frac{2.75}{6}\right) W = \underline{.14\,W}$$

$$V_{TL} = (.14)(1{,}150) = \underline{\underline{162^K}}$$

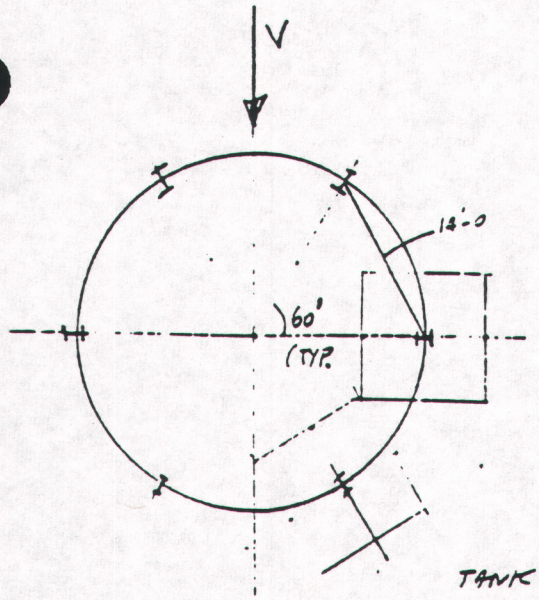


$c = 2(14)\sin 30 = 14'\text{-}0$

SEISMIC OVERTURNING:
$OM_S = 162(36) = 5{,}832$ K-FT
WIND OM: $OM_W = 26(36) = 936$ K-FT
FOR 6 COLUMNS: $N = 6$ $R' = 14'\text{-}0$ $\theta_n = 30°$

$$P_n = -\frac{P}{N} \pm \frac{2M}{R'N}\cos\theta_n =$$

TANK FULL + SEISMIC: $P_n = -\frac{1{,}150}{6} \pm \frac{2(5{,}832)}{14(6)}\cos 30° =$

$= -192 \pm 120 =$ −72 COMP / −312 COMP

TANK EMPTY + WIND: $P_n = -\frac{90}{6} \pm \frac{2(936)}{14(6)}\cos 30° =$

$= -15 \pm 23 =$ +8 UPLIFT / −38 COMP

$\therefore P_{MAX} = 312^K$ $l_x = 24'\text{-}0$ $l_y = 12'\text{-}0$

W10 × 54

(USE BASE PL 1¾" THICK)

W12 × [illegible] BASE

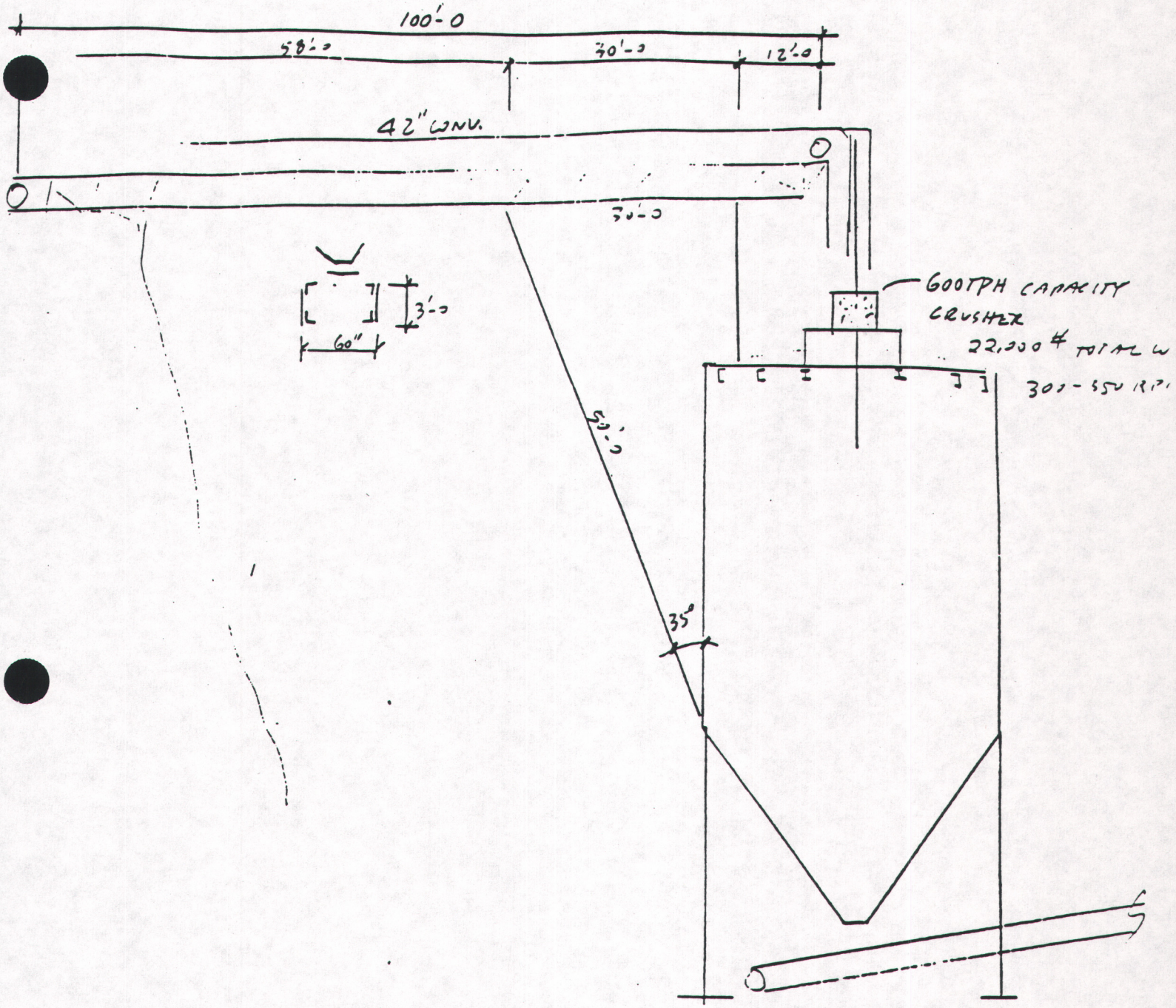


MATERIAL : 50 #/FT

DL : 110 #/FT

1) CASE 1: DESIGN FOR VERTICAL LOADS ONLY, INCLUDING LATERAL LOAD FROM CONVEYOR BELT.

MATERIAL: 100 #/FT

DEAD LOAD: 150 #/FT

WALKWAY: 50 #/FT

SNOW: 30 PSF (2.5+3) = 165 #/FT

TOTAL = 465 #/FT SAY 415 plf (NO LL WHEN FULL SNOW)

CRUSHER WEIGHT: 22,000 #

WEIGHT OF CHUTE: $\left(\frac{.25}{12}\right) 490 (2.5 \times 12 \times 2 + 6 \times 12 \times 2) = 2{,}083$

SAY 3,000 #

WEIGHT OF CONV BELT: 30 x 52 x 2 (1.3) = 4000 #

2,000 # /LEG.

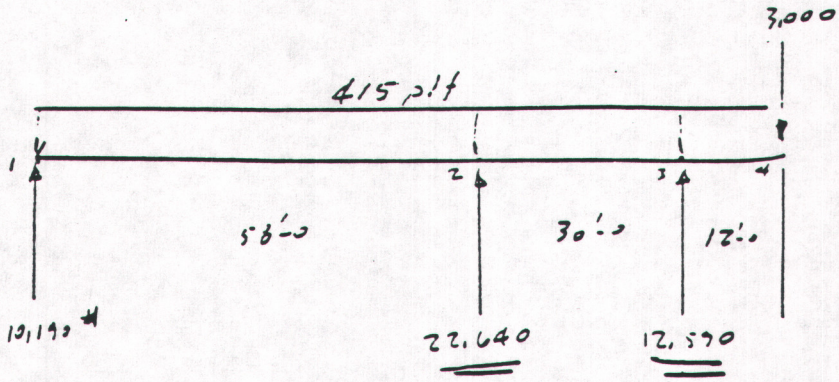


AT NODE ② R = 22,640 #

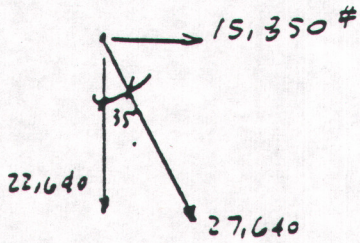


LOADS ON COLUMNS:

$P = \frac{22 + 1.150 + 19}{6 \text{ COL'S}} = 198.5$ K/COL.

SNOW

DL OM = 15.85 (26) = 412.1 K-FT

@ ③ & ④

$P_u = 198.5 \pm \frac{2(412.1)}{14(6)} \cos 30° = 198.5 \pm 8.5^K$

$= 207^K$ COMP

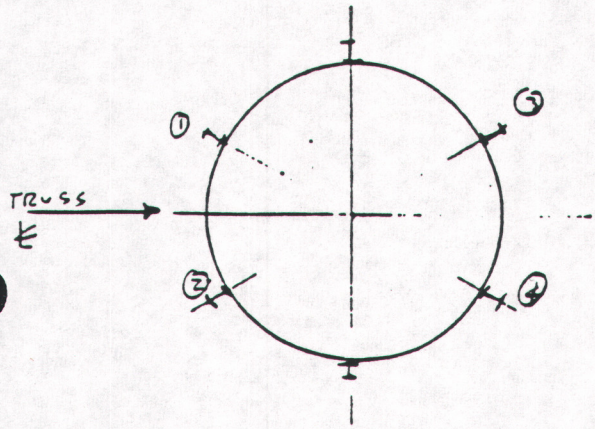


@ ① & ② $P_T = 198.5 - 8.5 + \frac{22.64 + 12.6}{2} =$

$= 208^K$ COMP

2) LOADS DUE TO SEISMIC LONGITUDINAL TO CONVEYOR

@ COL'S ③ & ④

$$OM = \underset{\text{SILO}}{5{,}832} + \underset{\text{CONVEYOR}}{22(66)(.14)} + \underset{\text{TRUSS}}{412} = 6{,}448\ \text{K-FT}$$

$$P_u = 198.5 + \frac{22}{6} \pm \frac{2(6{,}448)}{14(6)}\cos 30^\circ =$$

$$= 202.2 \pm 133\ \text{K} = \begin{cases} 335.2\ \text{K} \leftarrow \text{COMP} \\ 69.2\ \text{K} \end{cases}$$

@ COL'S ① & ②

$$OM = 5{,}832 + 22(66)(.14) - 412 = 6{,}036\ \text{K-FT}$$

$$P_u = 202.2 + \frac{27.64 + \overset{=17.6}{12.6}}{2} \pm \frac{2(6.036)}{14(6)}\cos 30^\circ =$$

$$= 220 \pm 125 = \begin{cases} 345\ \text{K} \\ 95\ \text{K} \end{cases}$$

3) WIND LOADS W/ EMPTY SILO.

ON TRUSS & BENTS

$$p = 1.6(1.4)(17) = 38\ \text{PSF}$$

ON SILO: $p = 22$ PSF

ON SILO: $V_w = 22[(32)28 + 20(28)/2] = 26{,}000\ \#$

ON TRUSS: $V_w = 22(5) = 110$ plf

Reactions from truss

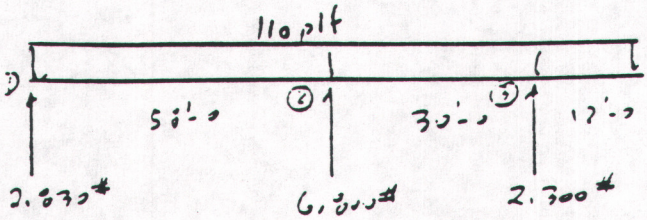


$$OM = 26(36) + (6.8 + 2.3)(76) = 1{,}628\ \text{K-FT}$$

$$P_u = \frac{90^k + 22.7\left(\frac{150}{415}\right) + 412\left(\frac{150}{415}\right)}{6} \pm \frac{1628(2)}{14(6)}\cos 30^\circ = 18.9 \pm 36.6 = \begin{cases} 56^k \\ -18^k \end{cases}$$

← TRUSS OTHER DIRECTION

TENSION

# SILO

DESIGN LOADS ON COLUMNS:

MAX COMP = 345 K  NO MOMENTS
MAX TENSION = 18 K

use W12x65  see comp. printout

BRACING:

$$T = \frac{2V\sin\alpha_n}{N\cos\theta_n} = \frac{2(162 + 22\times.14)\sin 60}{6\cos 45} + \frac{16\sin 60}{2\cos 45} = 57^k$$

crusher

TOTAL V = 162 + 16 + 3 = 181 K

use $\boxed{\text{2L } 4\times4\times5/16}$  $A = 4.0 - 2(5/16)(.875) = 4.25$

$T_{all} = 4.25(21.6) = 92^k > 73^k$ ok

$$f_n = \frac{244{,}000}{L^2}\sqrt{\frac{I}{W}}$$

$r = \sqrt{\frac{I}{A}} \therefore I = r^2 A$

$$f_{nx} = \frac{244{,}000}{4.5^2}\sqrt{\frac{7.43}{16.4}} = 1{,}320 \quad SF = 5.2 \text{ ok}$$

$I_y =$

$$f_{ny} = \frac{244{,}000}{14^2}\sqrt{\frac{15.4}{16.4}} = 654 > 350 \text{ ok} \quad SF = 1.9$$

HORIZONTAL  $P = 2V\sin\alpha_n/N$  $l_x = l_y = 13'-0$

$$T = 2(181)\sin 60/6 = 53^k$$

$\boxed{\text{use 2L } 5\times5\times5/16}$  20.6 #/FT

$I_x = 14.3$  $I_y = 29.5$

$$f_{nx} = \frac{244{,}000}{13^2}\sqrt{\frac{14.3}{20.6}} = 1{,}224 \quad SF = 3.5 \text{ ok}$$

Good for both axis

BASE PL  18 x 18 x 1 3/4" THICK

ANC BOLTS: V = 53 K  Lin T = 1.35(53)(.75/.55) = 134 K

use (4) 1 3/8" DIA. ANC BOLT A 307

HUNTINGTON 28 FT DIA SILO COLUMN
E W 12 X 65

PROJECT:
SUBJECT:

BY : ICC DATE : JAN 90

# STEEL COLUMN DESIGN

DESCRIPTION :

## ALLOWABLE STRESSES

> Fy : Yield = 36 ksi

> L. D. F. = 1.33

> SIDESWAY RESTRAINED : Y=1 N=0
X - X Axis = 1
Y - Y Axis = 1

> UNBRACED LENGTHS :
: X - X Axis = 24 ft
: Y - Y Axis = 12 ft

> EFFECTIVE LENGTH FACTOR :
" k ": X-X Axis = 1
" k ": Y-Y Axis = 1

## DESIGN DATA

> MAX. AXIAL FORCE = 345 kips

> Eccentricity : X-X = 0 in
> Eccentricity : Y-Y = 0 in

MOMENT @ TOP of COLUMN :
X-X Axis = 0 ft-k
Y-Y Axis = 0

> MOMENT @ BOTTOM of COLUMN :
X-X Axis = 0 ft-k
Y-Y Axis = 0

> TRANSVERSE MOMENT :
X-X Axis = 0 ft-k
Y-Y Axis = 0

MAXIMUM DESIGN MOMENT :
X-X Axis = 0.0 ft-k
Y-Y Axis = 0.0

- DESIGN SUMMARY

| | | | | |
|---|---|---|---|---|
| Formula 1.6 - 1a | = | 0.757 | <= | 1.00 |
| Formula 1.6 - 1b | = | 0.629 | <= | 1.00 |
| Formula 1.6 - 2 | = | NA | <= | 1.00 |

## ROLLED SECTION DATA

SELECTED STEEL SECTION ---->> W12X65

> DEPTH CLASS = in

| | | | | |
|---|---|---|---|---|
| Section Area | = 19.1 in^2 | S-XX : Section Mod. | = | 87.9 in^3 |
| Weight per Foot | = 65 # | Radius of Gyration | = | 5.28 in |
| Overall Depth | = 12.12 in | S-YY : Section Mod. | = | 29.1 in^3 |
| Web Thickness | = 0.39 in | Radius of Gyration | = | 3.02 in |
| Flange Width : bf | = 12 in | r-T | = | 3.31 |
| Flange Thickness | = 0.605 in | bf / 2tf | = | 9.92 |
| | | d / tw | = | 31.08 |

HUNTINGTON 28 FT DIA SILO COLUMN
SE W 12 X 65

PROJECT:
SUBJECT:
BY : ICC DATE : JAN 90

---

DETERMINE ALLOWABLE BENDING STRESSES

X-X AXIS :

| | | | |
|---|---|---|---|
| 1.5.1.4.1.2 : bf / 2 tf | : Fb = | 24.0 ksi | |
| 1.5.1.4.1.4 : d / tw | : Fb = | 24.0 ksi | |
| 1.5.1.4.1.5 : Lateral Buckling | : Fb = | 24 ksi | |

X-X AXIS - ALLOWABLE STRESS : F-bx * LDF = 31.92 ksi

Y-Y AXIS :

| | | | |
|---|---|---|---|
| 1.51.4.1.2 : bf / 2 tf :Flanges | : Fb = | 27.0 ksi | |

Y-Y AXIS - ALLOWABLE STRESS : F-by * LDF = 35.91 ksi

DETERMINE ALLOWABLE AXIAL STRESSES

k:x * Lu:x / r:x = 54.5 Actual Axial Stress = 18.06 ksi
k:y * Lu:y / r:y = 47.7 fa / Fa = 0.757

Cc= (2* pi^2 *E/Fy)^.5 = 126.10

Allowable Axial Stress :
X-X Axis = 17.94 ksi ALLOWABLE : Fa * LDF = 23.86 ksi
Y-Y Axis = 18.55 ksi

F'ex = 12 * pi^2 * E / (23 * (kLux / rx) ^2 ) * LDF = 67 ksi
F'ey = 12 * pi^2 * E / (23 * (kLuy / ry) ^2 ) * LDF = 87 ksi

f-bx = 0.00 ksi F-bx = 31.92 ksi
f-by = 0.00 ksi F-by = 35.91 ksi

C-mx = 0.60 C-my = 0.60

COMBINED STRESS CHECK NA

| | | | | |
|---|---|---|---|---|
| Formula 1.6 - 1a | = | 0.757 | <= | 1.00 |
| Formula 1.6 - 1b | = | 0.629 | <= | 1.00 |
| Formula 1.6 - 2 | = | NA | <= | 1.00 |

DESIGN OF FOUNDATION

Reqd Minimum weight = $1.5(18)^k$ FOR UPLIFT
$= 27^k$

Reqd Min bearing (vertical only) = $345^k$ including seismic.

shear @ base =

$OM = 53(6) = 318$ K-FT $\qquad e = \frac{M}{P}$

MIN FOOTING SIZE $= \sqrt{\frac{345}{6}} = 8 \times 8 \times 1'\text{-}6$

TOTAL WEIGHT $= 8 \times 8 \times (1.5 \times .15 + 3.5 \times .11) = 39^k$

TOTAL $P = 39 + 345 = 384^k$

$e = 318/384 = .83 \qquad L/6 = 8/6 = .83 \therefore$ inside kern

$$q = \frac{384}{64}\left(1 \pm \frac{6 \times .83}{8}\right) = \begin{cases} 9.72 \text{ KSF} > 8 \text{ NO HIGH} \\ 2.27 \text{ KSF} \end{cases}$$

TRY 9x9 x 1'-6 FOOTING

USE

$W = 9 \times 9 \times [1.5(.15) + 3.5(.11)] = 49^k$

$P = 49 + 345 = 394^k \qquad e = 318/394 = .81$

$$q = \frac{394}{81}\left(1 \pm \frac{6 \times .81}{9}\right) = \begin{cases} 7.3 \text{ KSF} \\ .22 \text{ KSF} \end{cases} \quad \underline{\underline{\text{OK}}}$$

TRY 8.5 x 8.5 x 1'-6 FOOTING

USE

$P = 345 + 49\left(\frac{72.25}{81}\right) = 389^k \qquad e = 318/389 = .818$

$$q = \frac{389}{72.25}\left(1 \pm \frac{6 \times .818}{8.5}\right) = \begin{cases} 8.5 \text{ KSF} > 8.0 \text{ say } \underline{\underline{\text{OK}}} \\ 2.3 \text{ KSF} \end{cases}$$

q for moment (subtract weight of footing) $= \frac{345}{72.25}\left(1 \pm \frac{6 \times .818}{8.5}\right) = \begin{cases} 7.53 \\ 2.02 \end{cases}$

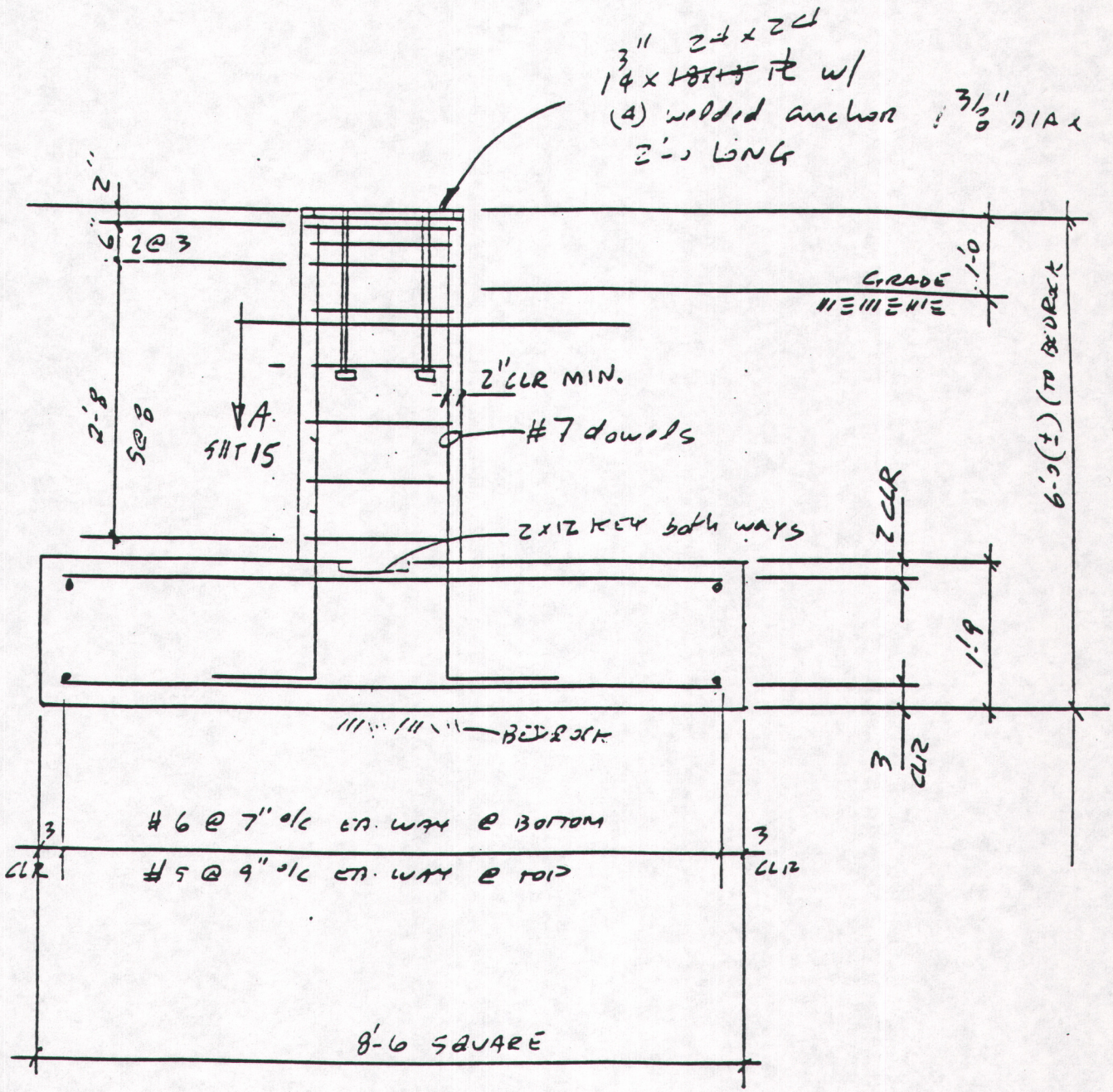


TYPICAL FOOTING CROSS-SECTION

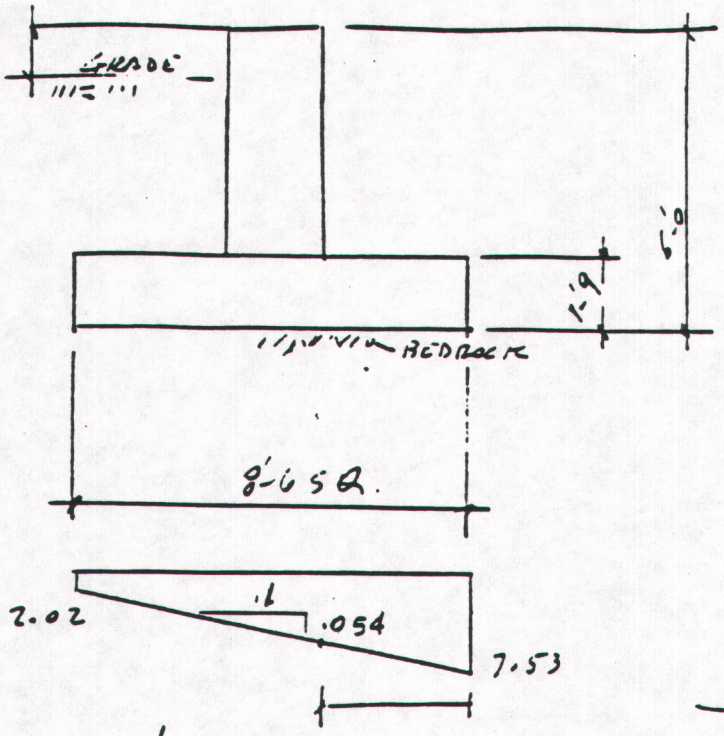


$$L' = \frac{8.5 - 2}{2} = 3.25'$$

$$M = \int_0^{3.25} \left(7.53x - \frac{.054x}{2}\right) dx$$

$$= \left(\frac{7.53}{2}x^2 - \frac{.054}{4}x^2\right)_0^{3.25} =$$

$$= 39.7^{k\text{-}ft}$$

$$M_u = 1.4(39.7) = 55.5^{k\text{-}ft} = 665^{k\text{-}in}$$

| D | d | b | $A_s$ | steel |
|---|---|---|---|---|
| 18 | 14.5 | 12 | .90 | #6 @ 6<br>#7 @ 8 |
| 21 | 17.5 | 12 | .73 | #6 @ 7<br>#7 @ 10 |

Check wide beam shear: $v_c = 13.4$ KSF $\quad L' = 3.25 - \frac{14.5}{12} = 2.04$

$$V_u = \left[2.04\left[7.53 - 2.04(.054)\right] + 2.04^2(.054)/2\right] \times 1.4 = 22^k$$

$$v_u = \frac{22}{1 \times \left(\frac{14.5}{12}\right)} = 18 \text{ KSF} > 13.4 \quad \text{N.G.}$$

Try $d = 17.5$ in $\quad L' = 3.25 - 17.5/12 = 1.79'$

$$V_u = \left[1.79\left[7.53 - 1.79(.054)\right] + 1.79^2(.054)/2\right] \times 1.4 = 18.75$$

$$v_u = \frac{18.75}{1 \times (17.5/12)} = 12.9 \text{ KSF} < 13.4 \quad \underline{\underline{\text{ok}}}$$

So use $\boxed{8'\text{-}6 \times 8'\text{-}6 \times 1'\text{-}9 \text{ thick w/ \#6 bars @ 7" o/c @ bottom each way}}$

Top steel: $q_u = \frac{1.7(18 \times 1.5)}{8.5 \times 8.5} = .64$ KSF $\quad M_u = .64(3.25)^2(.5)(12) = 4$

$b = 12 \quad d = 18 \quad$ Req'd $A_s = .04 \times d$
$= .05 \times d$

Use $A_s = (.002)(12 \times 18) = .432 \text{ in}^2$

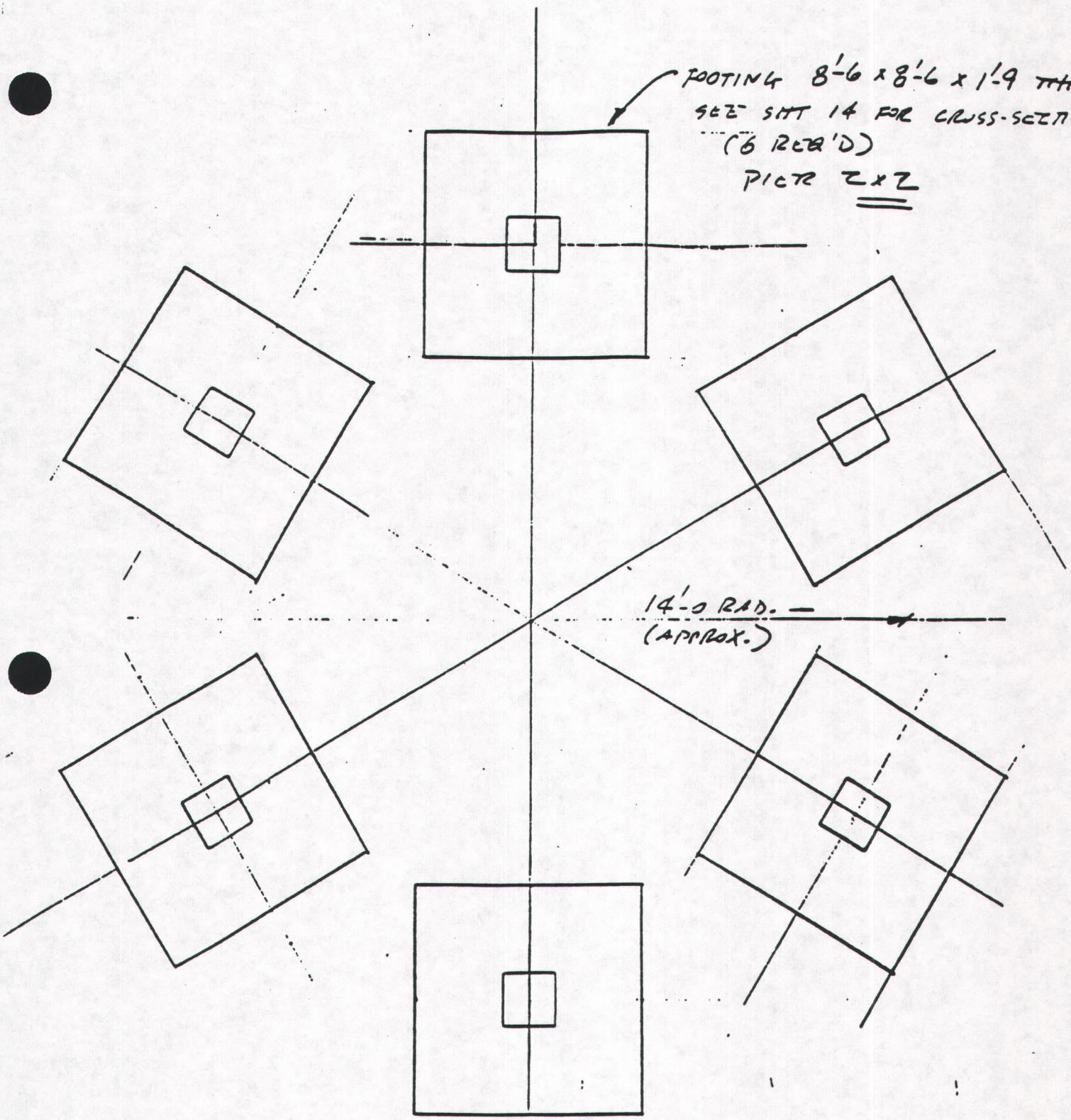


APPROXIMATE CONCRETE VOLUME $\approx \frac{6}{27}\left[8.5^2 \times 1.75 + 2^2(4.25)\right]$

$\approx$ 32 CY

FOUNDATION PLAN

3/16" = 1'-0

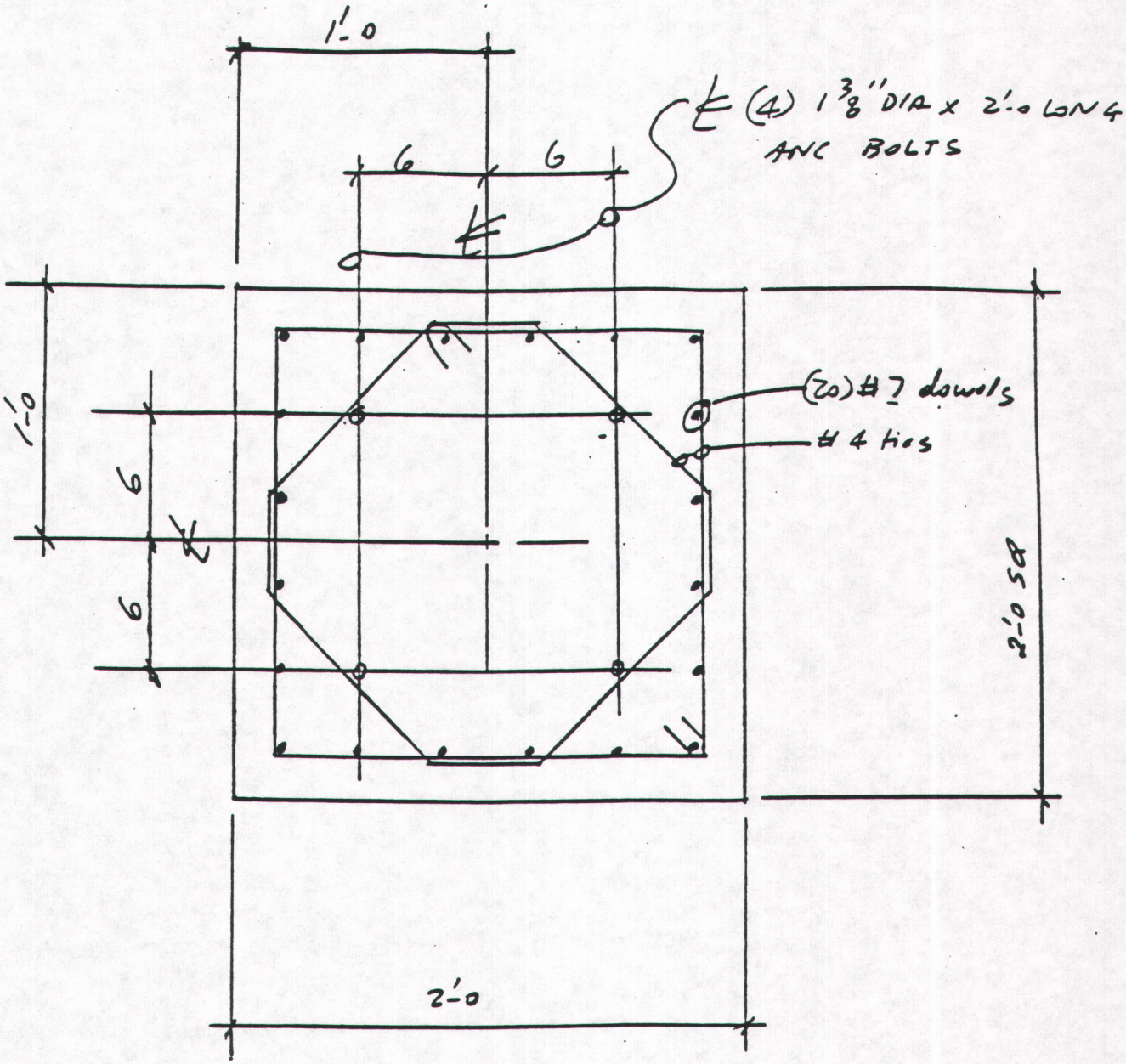


SECTION "A-A" FROM SHT 14

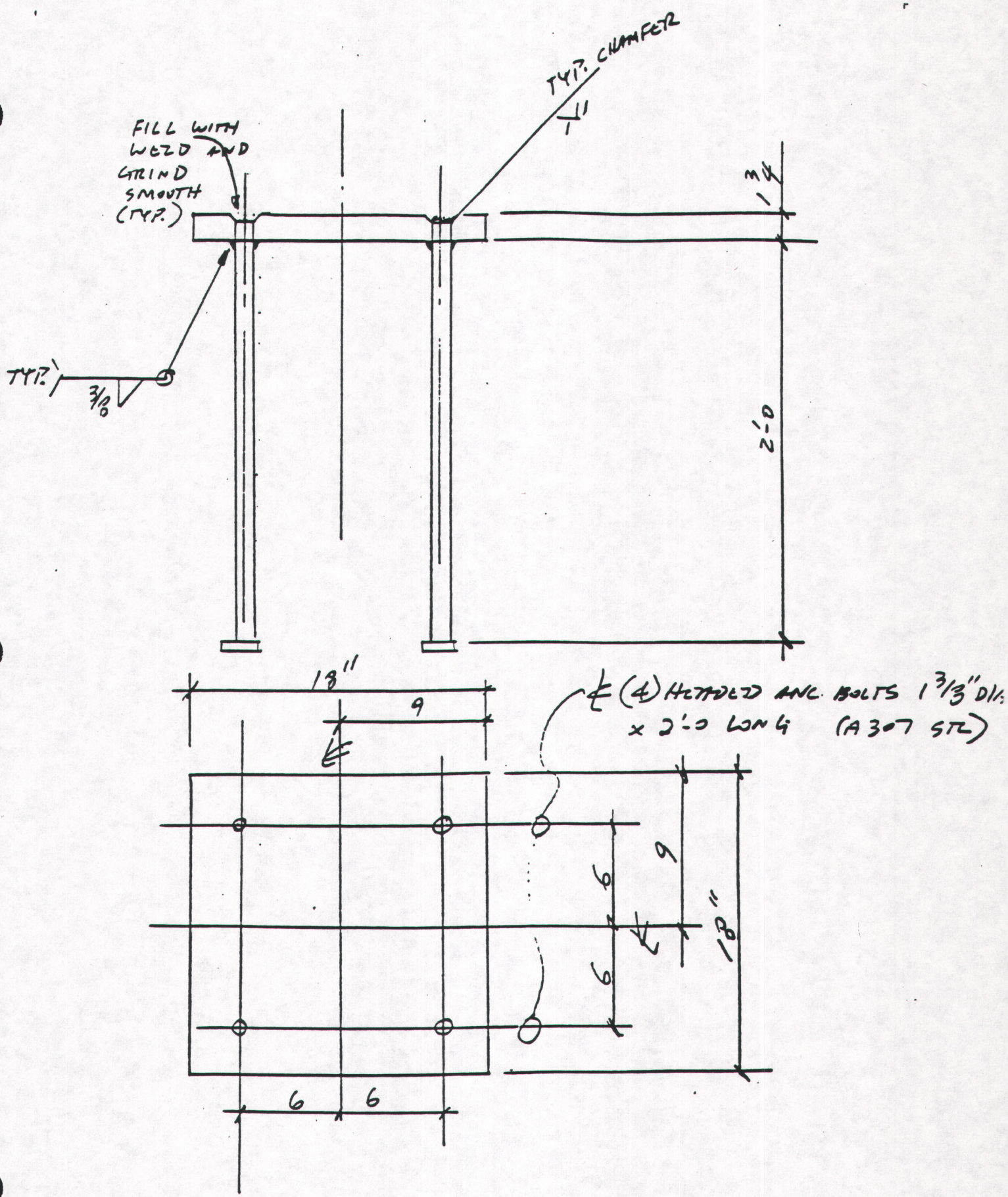


DETAIL OF EMBED. BASE ℄.