APPENDIX 7-38

BLIND CANYON CHANNEL EROSION AND CUMULATIVE DRAINAGE EROSION

06/04/93

DRAINAGE PARAMETERS

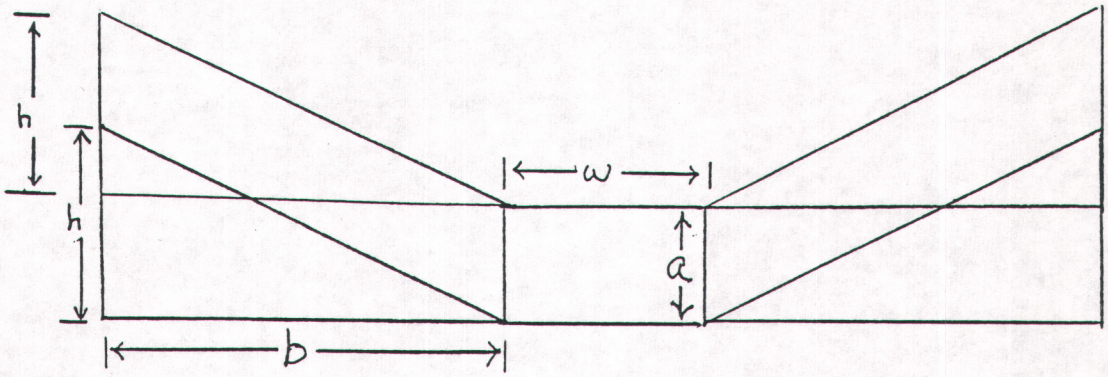

where: w = width of channel (ft)
a = depth of erosion (ft)
b = base of side slope (ft)
h = height of side slope (ft)
l = length of drainage reach

Erosion Area: $\left[\left[2\left(\frac{1}{2}hb\right)\right] + (aw)\right] - 2\left(\frac{1}{2}hb\right) = x\ ft^2$

Erosion Volume: $x\ ft^2(l) = y\ ft^3$

$$\frac{y\ ft^3}{43560\ ft^2/ac} = z\ ac\text{-}ft$$

Erodable Volume: z (-% (dec) material too large to be erodable) = z'
material too large to be erodable/transportable obtained from Manti La-Sal National Forest service soil survey (Appendix 7-27)

RILLS A-D

(1:2 side slopes)
$h = 1.5'$
$w = 1.0'$
$l = 2300'$
$h = 1$
$b = 2$

$$\left[2\left[\tfrac{1}{2}hb\right] + \left[aw\right] - 2\left[\tfrac{1}{2}hb\right]\right.$$

$$2\left[\tfrac{1}{2}(1)(2)\right] + \left[(1.5)(1)\right] - 2\left[\tfrac{1}{2}(1)(2)\right] = 1.5\ ft^2$$

$$1.5^2(2300) = 3450\ ft^3$$

$$\frac{3450}{43560} = \underline{0.08\ ac\text{-}ft}$$

0.08 (non-erodable material) $= 0.08(1-.20) = \boxed{0.064\ ac\text{-}ft}$

E

$$\left[2\left[\tfrac{1}{2}(2)(1)\right] + (2.4)2\right] - 2\left[\tfrac{1}{2}(2)(1)\right] = 4.8\ ft^2$$

$$(4.8\ ft^2)(500\ ft) = 2400\ ft^3$$

$$\frac{2400}{43560} = \underline{0.055\ ac\text{-}ft}$$

$.055$ (non-erodable material) $= 0.055(1-.20) = \boxed{0.044\ ac\text{-}ft}$

Sections 14.5-19+

$$\left[2\left[\tfrac{1}{2}(2)(1)\right]\right] + \left[(4)(.5)\right] - 2\left(\tfrac{1}{2}\right)(2)(1) = 2\ ft^2$$

$$(2\ ft^2)(802.3\ ft) = 1604.6\ ft^3$$

$$\frac{1604.6}{43560} = \underline{0.037\ ac\text{-}ft}$$

$.037$ (non-erodable material)

$.037(1-0) = \boxed{0.037\ ac\text{-}ft}$ erodable material

EARTHFAX ENGINEERING, INC.
ENGINEERS / SCIENTISTS

PROJECT UC-27 PAGE 3 OF 3
COMPUTED JC DATE 5/25/93
CHECKED BKB DATE 5/26/93

TOTAL:

A-F	0.064	AC-FT
E	0.044	
14.5-19+	+0.037	

0.145 ac-ft (one-time event)

0.006 sed Route/yr