INCORPORATED
EFFECTIVE:
JUL 3 0 1997
97B
UTAH DIVISION OIL, GAS AND MINING

APPENDIX 7-50

CONSTRUCTION SEQUENCE - 72" CULVERT

INCORPORATED
EFFECTIVE:
JUL 30 1997 97B
UTAH DIVISION OIL, GAS AND MINING

Appendix 7-50
Construction Sequence

Installation of a 72" culvert and construction of earthwork pads for the expansion of surface facilities at the Crandall Canyon Mine is described in outline and in detail below. All construction described below will be done in a manner which produces the absolute minimum sedimentation to Crandall Creek.

A. Construct of Temporary Silt Fences in Stream Bed

B. Start Placing Stream Channel Drain System at Outlet End

1. Install geotextile fabric on stream channel surface
2. Place drain rock
3. Install drain pipe
4. Place drain rock around and above pipe
5. Install geotextile on top of drain rock bed
6. Place marker material on top of geotextile
7. Place layer of earth fill on top of marker material

C. Construct of Permanent Rip-Rapped Stream Channel at Outlet

D. Continue Stream Channel Drain System Upstream

E. Install and Backfill 72" Culvert

F. Install Inlet Section and Trash Rack. Turn Water into 72" Culvert

G. Begin Pond Construction

H. Begin Pad Construction

INCORPORATED
EFFECTIVE:
JUL 30 1997
97B
UTAH DIVISION OIL, GAS AND MINING

Work on the 72" culvert installation will not be initiated until after the peak runoff has subsided and stream flows in Crandall Creek have dropped off to manageable levels (e.g. approximately 10 cfs or less. *Refer to Appendix 7-4 for design calculations*).

Prior to any work in the stream, two silt fences will be constructed by hand across the stream channel at the eastern (downstream) end of the project. ***A silt fence will also be constructed across the work area (construction pad) after the eastern toe has been established, to control sediment runoff from the site.*** Access will be maintained to the silt fence so that sediment trapped during construction can be cleaned out as needed. *See attached calculations for silt fence.* ***The silt fences will be constructed according to the "post and mesh" method commonly used by UDOT. This method utilizes a non-rotting filter fabric stretched across the stream flow, backed by a wire-mesh fence material, which in turn is supported by a series of steel posts anchored into the streambed. Steel fence posts, 5' in length, will be installed on 2'-3' centers across the entire width of the stream channel and up along either bank for an additional 4'-6'. These posts will be securely anchored into the stream bed/bank, either by being driven firmly into the ground or by being placed in holes dug into the ground and tightly backfilled with course rock. If additional strength is needed to adequately withstand the lateral force of the flowing water, the fence posts will be individually supported with angled back-bracing located on the down-stream side and firmly anchored into the streambed. After the fence posts (and bracing) have been installed across the channel, a layer of steel wire-mesh fencing will be attached to the upstream side of the posts to serve as a backing for the filter fabric. The wire-mesh fencing will be 14 gauge minimum, 6" x 6" openings maximum, and will be attached to the fence posts with metal tie wire or clips. The fencing will be installed so that it fits tightly to the bottom of the channel with no gaps in between. If necessary, the channel will be worked with hand tools to assure a tight fit for the bottom of the fence into the stream bed. A row of rock boulders will be placed behind the fence on the downstream side to provide additional support to the fence bottom in the areas between the fence post supports. The fence post/wire-mesh structure will be tethered on either end (at each bank) to maintain adequate tension to support the top edge of the fence.***

After the wire-mesh fence has been installed, the filter fabric silt fencing material (filter cloth) will be installed. This filter cloth will be installed on the upstream side of the wire-mesh back fence and will be attached with metal tie wire or clips. The toe of the filter cloth will be imbedded (anchored) in a trench dug across the channel (and up the bankslopes). This toe-trench will be located several feet upstream from the fence in order to not interfere with the fence post anchors. The toe of filter cloth will be laid into the toe-trench and backfilled with rock material of sufficient size to prevent the trench from being scoured and to prevent the filter cloth from being lifted up by the force of the flowing water.

Prior to installing the main 72" culvert an underdrain must first be constructed within the existing streambed below the main culvert. The purpose of the underdrain is five fold:

a) to handle the in-stream flow during installation of the main 72" CMP culvert

b) to handle any unplanned seepage from the 72" culvert during the operational life

INCORPORATED
EFFECTIVE:
JUL 3 0 1997
97B
UTAH DIVISION OIL, GAS AND MINING

of the mine

c) to handle any naturally occurring groundwater flow which may continue to recharge into the existing stream channel during the operational life of the mine

d) to handle any naturally occurring seeps along the hillside which may be covered with fill during the expansion project, and

e) to handle the in-stream flow during final reclamation when the 72" CMP is finally being removed

The purpose of the geotextile is to protect the existing stream bank material in its present in-place condition, and to provide a barrier between the in-place topsoil and the imported fill material. The marker material (earth material of a different color) will also serve as a visual aid to assist reclamation efforts in the future. By using the geotextile and marker material the existing topsoil located on the steeper hillside can be left in place. During final reclamation the fill material will be removed, along with the marker material and the geotextile, to re-expose the existing topsoil.

As the underdrain system is being installed, all trees and brush will first be removed from along the sides of the stream channel. Trees will be cut approximately 3" to 5" above the ground with the roots left intact to help hold the soils along the stream bank. Cut trees and brush will be temporarily placed out of the way along the bank side until after installation of the drain system and the 72" culvert has been completed.

Installation of the drain system in the stream channel is the next step (Refer to Figure 12, Appendix 7-4, for detail of the under drain system; enclosed herein for easy reference). This procedure will start at the proposed outlet (downstream) area. A ramp will be constructed down from the existing sedimentation pond embankment to provide access to the stream bed. A geotextile fabric will be placed by hand in the stream channel, across the bed and five feet beyond the edges of the channel. A layer of clean 2" drain rock gravel will then be placed on top of the fabric to form a bed for the drain pipe (18" perforated cmp culvert). After installing the drain pipe, another layer of drain rock will be placed around and on top of the pipe. Another layer of geotextile will be placed on top of the drain rock and will be covered by a 6" minimum layer of different colored earthen marker material. Finally, a layer of 2" x 0" granular earthfill several feet thick will be placed on top of the marker layer to serve as a bedding material for the culvert installation which will follow later. This layer placement of geotextile/drain pipe/drain rock/geotextile/marker bed/bedding material will then proceed upstream in an orderly fashion in consecutive 20' increments. As construction of the underdrain progresses upstream, the stream water will flow through the drain pipe/drain rock and construction equipment can operate freely on the earth fill on top of the newly construction drain system. Much of the sediment stirred up by hand placement of the geotextile will be filtered out within the newly installed bed of drain rock.

As soon as equipment can adequately operate on top of the drain system located at the

INCORPORATED
EFFECTIVE:
JUL 8 0 1997
UTAH DIVISION OIL, GAS AND MINING

97B

bottom of the ramp (i.e. after the 2" x 0" culvert bedding material is in place), rip-rap will be placed in and along side the stream channel in the downstream area where the culvert outlet will eventually be located. The rip-rapped area will be designed and constructed to serve as an effective energy dissipater once the 72" culvert is installed permanently. (Refer to Figure 11 Appendix 7-4 for detail of the rip rap structures; enclosed herein for easy reference). In the meantime, flow from the outlet of the drain pipe will be routed onto the newly installed rip-rap field to help minimize sedimentation during the remainder of construction. It should be noted that according to engineering recommendations, as presented in Appendix 7-4, the rip rap apron should be 30' long and 18' wide. **This rip rap configuration has been determined to be adequate to slow the exit velocity of a 100 year, 6 hour flow event to less than the velocity of the existing natural stream channel during similar flow conditions. In order to ensure maximum protection to the existing channel, Genwal will extend the length of the rip rap apron to 35-40' and widen the outlet of the apron to 20-25'. Also, the engineering calculations for the flow velocity across the apron assume a conservative roughness coefficient for the rip rap which is the same as for the natural channel. In reality, the roughness of the rip rap apron will be greater than the natural channel which should result in an even lower exit velocity. Fortunately, there are a number of larger boulders presently existing in the area adjacent to the proposed culvert outlet which can be used for construction of the rip rap apron. These boulders are generally larger than the boulder sizes specified for the apron according to the engineering determinations referenced in Appendix 7-4. Therefore, utilization of these larger boulders for the rip rap apron will serve to provide an even greater measure of energy dissipation and lower exit velocities. .**

After the outlet rip-rap has been completed, additional silt fences (or straw bale dikes) will be installed across the lower (downstream) end of the new earthwork fill to prevent siltation in case of a rain storm event during the remaining construction of the underdrain and the 72" culvert. **Refer to Chapter 7 Figures, Figure 7-11 and Figure 7-12 for typical installation of the silt fence and straw bale sediment treatment.**

Construction of the drain system will progress upstream until the area adjacent to the existing loadout is reached. At this location a second access ramp will be constructed from the road down to the stream. This will become the primary access route for the remainder of the drain/culvert construction. The relatively flat area at the bottom of the ramp (on the south side of the creek) can then be used as a temporary central staging area for construction materials and equipment.

With the primary access ramp now in place, construction can continue upstream as described previously on two fronts: a) construction of the underdrain system will continue upstream, in consecutive 20' increments, as described previously and; b) installation of the 72" CMP will begin at the downstream outlet (rip-rap) end and proceed upstream.

As the main culvert is being laid in place, 36" CMP risers will be installed at the upper end of the lower pad and near the reclaim tunnel exit. These risers will be designed to daylight at the as-built surface and will be used to facilitate inspection and maintenance of the main

INCORPORATED
EFFECTIVE:
JUL 30 1997
97B
UTAH DIVISION OIL, GAS AND MINING

In general, the culvert will follow the existing stream bed alignment as closely as practicable while still keeping the culvert as straight as possible for optimum flow characteristics. Angled joints will be kept to 15° or less to promote smooth flow. Culvert alignment may be altered slightly in some areas in order to complement the overall facility design in the area of the reclaim tunnel, the crusher building foundation and the sediment pond.

After the drain installation has proceeded upstream, installation and backfilling of the 72" culvert will follow. Work will progress as quickly as possible on the underdrain and the 72" culvert to keep exposure time to an absolute minimum. Once the main culvert has been extended to the upstream end of the upper yard, the inlet will be fitted with a standard inlet end-section equipped with a trash rack. The underdrain pipe will then be capped and the full flow of the stream will be routed into the main culvert. The head wall above and around the culvert inlet (free board) will be rip-rapped at this time. (Refer to Figure 10 of Appendix 7-4 for culvert inlet detail; enclosed herein for easy reference). An additional freestanding trash rack will also be installed upstream from the inlet at a location convenient for maintenance and cleanup. The culvert should be fully functional at this time.

As soon as possible after the main culvert has been installed in the vicinity of the designated topsoil salvage area and backfilled sufficiently to allow equipment to cross over, topsoil will be salvaged from the topsoil area. An estimated 3,000 cubic yards of topsoil will be removed from this area and transported to the existing storage area located at the mouth of Crandall Canyon. However, a soil scientist will be on site during this time and will direct additional topsoil recovery if there is more than 3,000 cubic yards in existence.

The pad construction can now begin in earnest. Prior to placing fill material for the pad, the south side slope will have the trees and brush removed with stumps and roots left in place to help stabilize the soil as described earlier. Utmost care will be used to ensure that existing topsoil resources along the slope are protected during this process. All cut trees and brush will be removed from the site and disposed of in an approved manner. After the hillside has been cleared, the slope will then be covered with a geotextile fabric (refer to **Figure 12** for details). The purpose of this geotextile is to provide a separation barrier between the existing topsoil (which is to remain in place) and the imported fill. Placing of the geotextile will be done in lifts as the pad is built up. In addition, a 6"-12" layer of colored marker material will be placed between the geotextile and the fill material serve as a visual boundary for equipment operators during final reclamation. Geotextile and marker material is to be applied to the designated area shown on Plate 5-20 but not for areas from which topsoil has been previously salvaged.

Pad construction will start at the lower end of the property. The fill material (8"x 0) will be hauled from an approved borrow area which has been certified as weed free by the Utah State Agriculture Department and tested to assure soil is non-toxic and nonhazardous. It will be placed on the pad, graded and compacted in appropriate lifts to meet compaction and stability requirements. Compaction must be maintained at a minimum of 90%. Fill material will be an 8" x 0" granular borrow product with specified size gradation to allow 90-95% compaction for a structural fill of 3,000 psf minimum. In structural areas such as around the culvert, reclaim tunnel, escape tube, stacking lane extension, and structural foundations (loadout, crusher

INCORPORATED
EFFECTIVE:
JUL 30 1997
97B
UTAH DIVISION OIL, GAS AND MINING

structural fill of 3,000 psf minimum. In structural areas such as around the culvert, reclaim tunnel, escape tube, stacking lane extension, and structural foundations (loadout, crusher building, conveyor bents, etc.), compaction will be maintained at 95% with a load bearing capacity of 3,000 psf. Fill will be placed in layers, graded and compacted to meet all necessary structural requirements. Placement and compaction of all fill will be under the direction of registered, professional engineers. As the lower pad is being constructed, silt fences and/or straw bales will be maintained **across the entire** downstream end of the construction site to provide additional interim sedimentation protection.

When construction of the lower pad reaches the floor elevation of the sediment pond, construction of the new pond embankment can then begin. The existing spillways and piezometer hole will be left in place. The additional embankment will be constructed south across the newly installed culvert and will abut the slope of the south hillside. This pond embankment will have a 2:1 outslope and a 3:1 in-slope. This stable design will thereby eliminate the need for pond lining. Once the new embankment is securely keyed into the opposite hillside, the remaining (existing) embankment of the old pond will be removed, leaving a new enlarged impoundment in its place. (Note: In areas where the fill slopes are required to be keyed into the existing hillside, in order to assure adequate geotechnical stability, all available topsoil will first be salvaged.)

After the pond embankment is constructed, and sedimentation controls leading into the pond are adequately in place, earthwork activities will remain focused on the lower pad in order to accommodate the most expedient construction schedule for the new loadout facilities, namely the reclaim tunnel, the crusher building, and the loadout structure.

A naturally occurring seep exists on the south slope near the location of the proposed crusher building. A french drain system will be installed within the lower pad as it is being built up which will connect this seep to the main underdrain system located beneath the 72" culvert. **A perforated pipe bedded in 2" drain rock will be installed in a trench dug from the seep area to the main underdrain. The pipe and gravel will be wrapped in geotextile material to prevent clogging of the drain system.**

After the lower pad has been completed to finish grade (approximately 7,800' elevation), work will continue in preparation of the permanent coal storage area. Topsoil will be removed from a small area of the adjacent slope near the location of the future stacking tube where the southern flank of the coalpile will rest against the existing hillside. This topsoil will be salvaged under the direction of a soils scientist to assure optimum recovery of the soil resource in this area. The soil will be stockpiled off-site at an approved storage location until it is re-used during final reclamation.

After the lower pad is completed sufficiently to allow foundation work to begin, construction of the upper pad can begin. Special emphasis will be given to widening the existing road from the loadout to the truck turnaround. This widening will be done as part of an overall effort to reestablish the Forest Service road as a two-lane roadway through the minesite to the Forest Service trailhead parking Area. This will be accomplished by the following:

INCORPORATED
EFFECTIVE:
JUL 30 1997
97B
DIVISION OF OIL, GAS AND MINING

a) The existing roadway from the loadout up to the truck turnaround area will be widened by approximately 15 feet. This will result in an additional (third) lane which **will** be used by the trucks as a stacking lane as they wait to enter the loadout to be loaded. This will free up the existing road for unobstructed two-way, two lane traffic to facilitate public use of the road for Forest related activities.

b) The turn-around area will also be widened to allow the trucks to turn in a standard counter-clockwise direction and thereby eliminate the present practice of clockwise cross traffic turnarounds.

c) The existing oil storage shed will be rehabilitated and the roadway will be widened, regraded and repaved in this area.

d) After the new loadout facilities are completed, the existing loadout facilities will be removed and cleaned up and the road will be widened, realigned, and repaved through this area. Also, the existing truckscales and exit ramp will be removed from the middle of the road and the roadway will be re-established and repaved in this area.

e) Construction of the high speed, high efficiency truck loadout will in and of itself help minimize the congested conditions which now exist within the mine site. Presently trucks are often forced to stop along the Forest Service road while waiting to be loaded. The expanded coal storage capabilities and the new high-speed truck loading facilities will allow the trucks to be loaded in a continuous, uninterrupted basis, thereby eliminating the major cause of tie-ups and congestion.

The old truck loadout will be dismantled once the new loadout facility has become operational. The loadout structures will be removed and the excess coal around the area will be cleaned up and hauled to the new coal stockpile area. Once the structures have been removed, this area will provide a place to store material as well as snow and salt in the winter time.

After the new loadout facilities have been constructed, the existing loadout area will be removed and the area will be rehabilitated and cleaned up. These rehabilitation measures shall include the following:

a) The existing loadout facilities will be dismantled and removed from the site, including the coal bin, crushers, scalehouse and loading chute.

b) The existing truck scale will be removed from the middle of the road and the roadway will be regraded and repaved.

c) The existing oil shed will be rehabilitated and the roadway will be regraded

INCORPORATED
EFFECTIVE:
JUL 30 1997
97B
UTAH DIVISION OIL, GAS AND MINING

and repaved in this area.

d) The existing coal pile/storage area will be totally cleaned up. All coal and coal products will be removed. The area will then be swept and vacuumed.

e) The hillside below the coal storage area will be dressed up. The mine discharge waterlines will be relocated in a more orderly fashion. Coal products will be vacuumed from the hillside.

After the upper and lower pads have been constructed to the proper elevations, surface drainage ditches, culverts, and rip-rap will be installed as shown on Plate 7-5C. All newly installed surface drainage culverts (buried and overland) shall be 30" minimum and fitted with inlet end sections. Rip-rap shall be installed within the sediment pond below the culvert outlets to prevent scouring of the pond bottom.

eng\permit\app7-50

INCORPORATED
EFFECTIVE:
JUL 30 1997
97B
UTAH DIVISION OIL, GAS AND MINING

MAIN CULVERT INLET AND TRASH BARRIERS

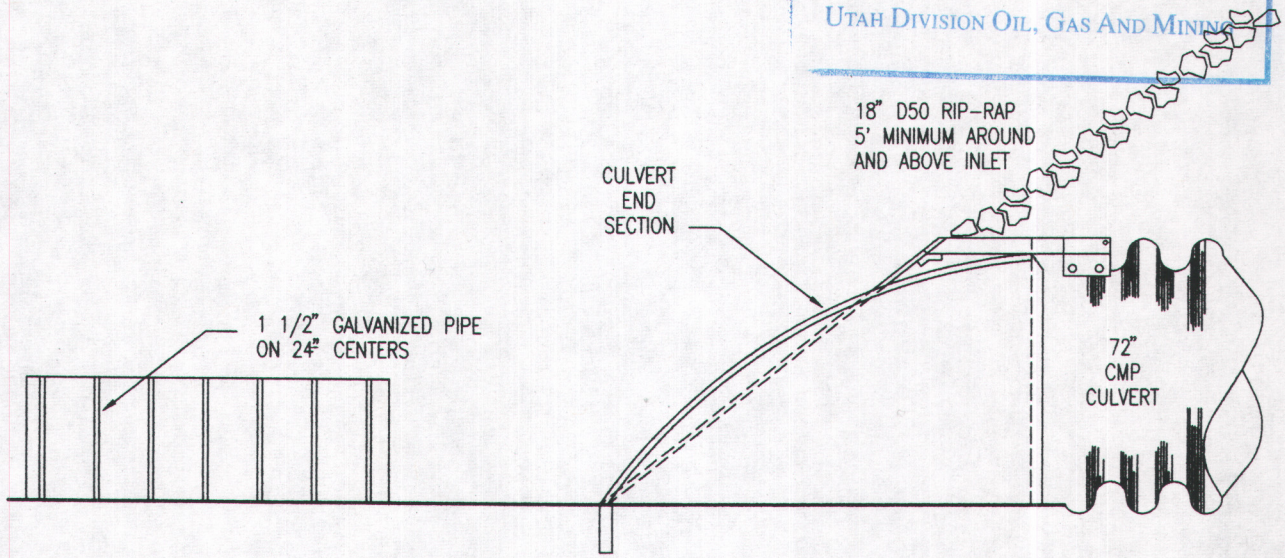

SIDE VIEW

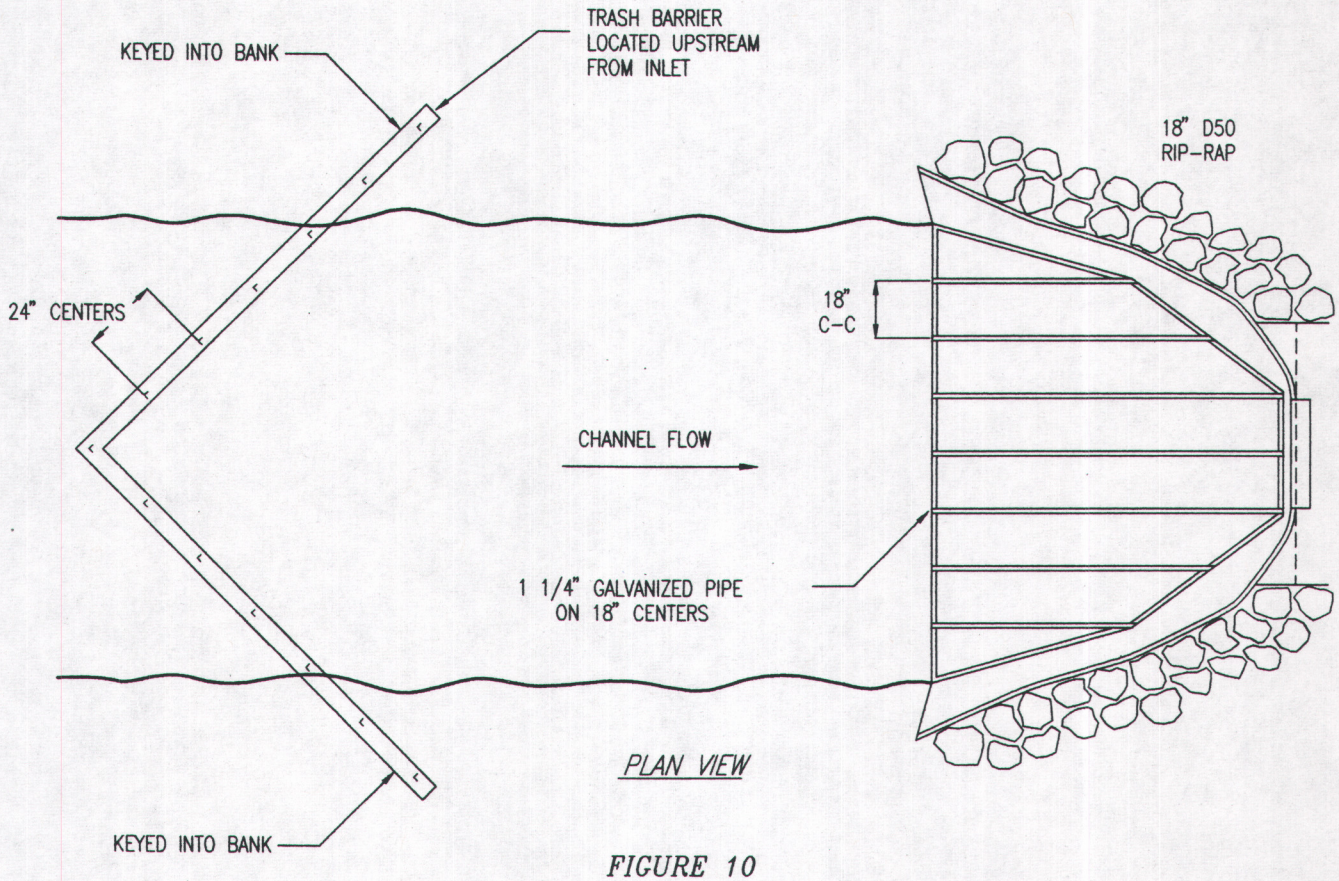

PLAN VIEW

FIGURE 10

MAIN CANYON CULVERT OUTLET

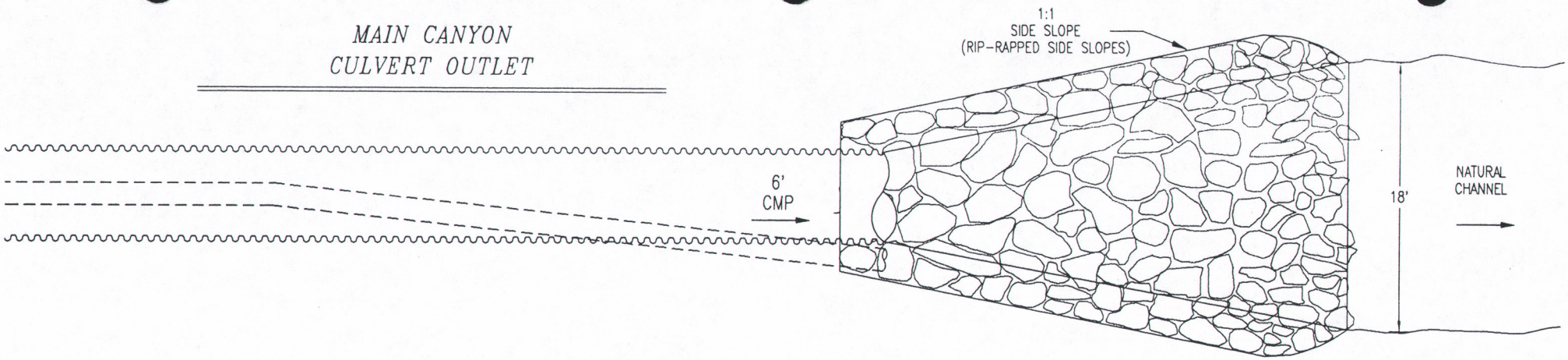

TOP VIEW

RIP-RAP: 30" D_{50} ENTIRE LENGTH OF APRON

30'

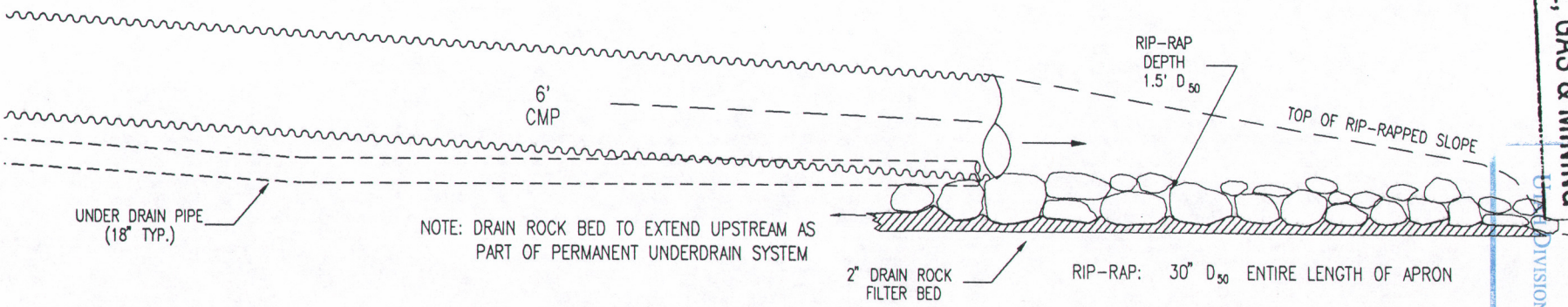

SECTION VIEW

RECEIVED
JUL 14 1997
DIV. OF OIL, GAS & MINING
INCORPORATED
EFFECTIVE:
NATURAL
CHANNEL
JUL 30 1997
DIVISION OIL, GAS AND MINING
97B

* DESIGN BASED ON FIGURE 7-26, DESIGN OF OUTLET PROTECTION – MAXIMUM TAILWATER CONDITION, "APPLIED HYDROLOGY AND SEDIMENTOLOGY FOR DISTURBED AREAS", BARFIELD, WARNER & HAAN, 1983.

SCALE: 1" = 10'

FIGURE 11

ACAD REF: FIGURE11A

TYPICAL UNDERDRAIN CONSTRUCTION

INCORPORATED
EFFECTIVE:
JUL 30 1997
97B
UTAH DIVISION OIL, GAS AND MINING

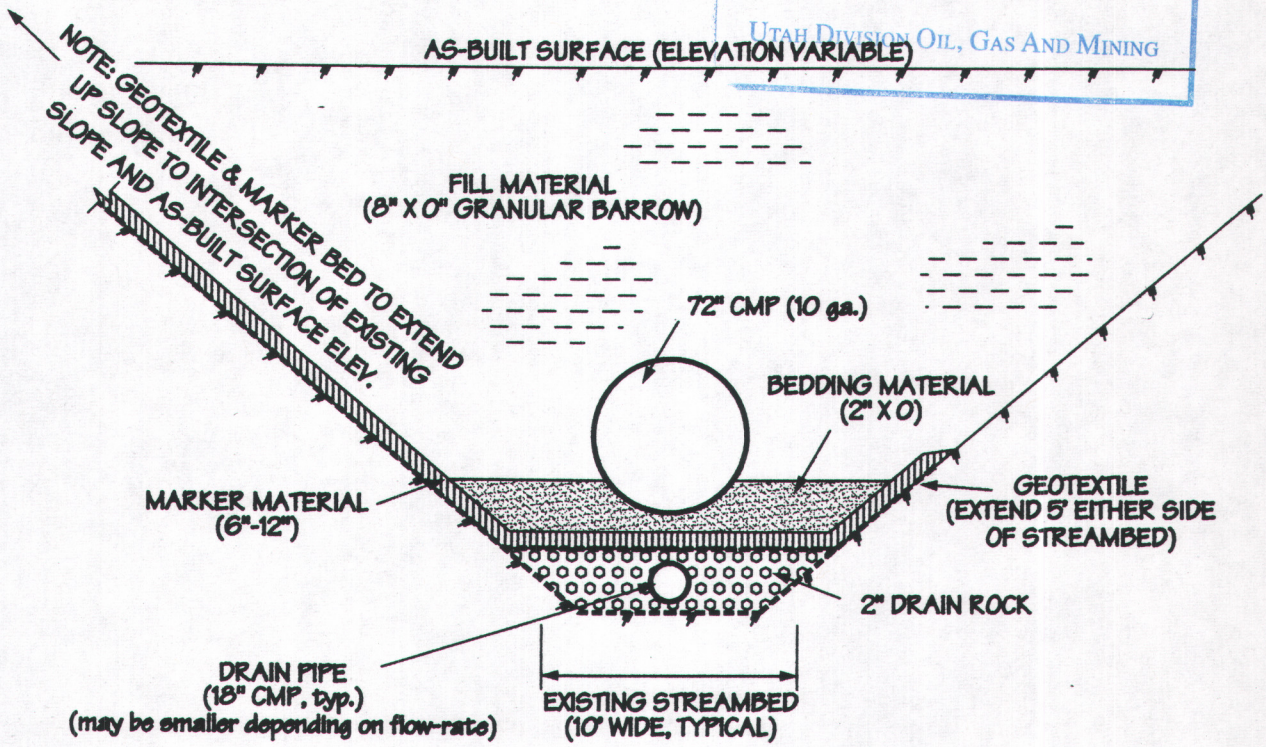

SCALE: 1" = 15'

Note: Culvert installation will generally follow the existing stream alignment, but may vary slightly to accommodate accepted engineering and installation standards.

FIGURE 12

INCORPORATED
EFFECTIVE:
JUL 3 0 1997
97B
UTAH DIVISION OIL, GAS AND MINING

ATTACHMENT 1

SILT FENCE CALCULATIONS

STEFFEN ROBERTSON AND KIRSTEN
Consulting Engineers and Scientists

INCORPORATED
EFFECTIVE:
JUL 30 1997
UTAH DIVISION OIL, GAS AND MINING

TECHNICAL MEMORANDUM

TO: Mr. Gary Gray, GENWAL Resources, Inc.

FROM: Pete Kowalewski, SRK

DATE: June 4, 1997

SUBJECT: **Crandall Canyon Silt Fence Evaluation (SRK #94401)**

1.0 INTRODUCTION

GENWAL Resources, Inc. (GENWAL) will be constructing an earth fill pad across the creek in Crandall Canyon during the 1997 construction season. The pad will cover approximately 4 acres and will be constructed of common earth fill. A 72-inch culvert will be placed in the creek beneath the pad to pass the creek flow.

Steffen Robertson and Kirsten (U.S.), Inc. (SRK) has been retained by GENWAL to evaluate the use of silt fences during construction activities in Crandall Canyon using the SEDCAD+ computer program. The purpose of the analyses is to assess the possible benefits of using silt fences to reduce the amount of sediment continuing down the creek during construction activities. After construction at the site is completed, stormwater runoff from the newly completed pad site will be routed to an existing sediment pond.

The SEDCAD+ computer program was developed by Dr. Richard Warner of the University of Kentucky and Ms. Pamela Schwab of Civil Software Design. The program was developed to assist in the design and evaluation of stormwater, erosion, and sediment control techniques. Major components encompass design aspects of hydrology, hydraulics, erosion, sediment control, and sedimentation. The program is used to evaluate sediment generation and delivery due to a single storm event on a catchment area. The latest version of SEDCAD+ (Version 3.1) was used to perform the analyses.

2.0 METHODOLOGY

The Crandall Canyon catchment area upstream of the proposed construction was subdivided into seven sub-catchment areas for use in the SEDCAD+ program. In addition, the disturbed area created by the construction of the pad was sub-divided into

Steffen Robertson and Kirsten (U.S.), Inc.
7175 W. Jefferson Avenue, Suite 3000, Lakewood, Colorado 80235
Tel. (303) 985-1333 Facsimile (303) 985-9947
Other offices in: U.S.A., Canada, United Kingdom, Africa, South America and Australia

6 sub-catchment areas based on the ground slopes on the constructed pad. The ground slope of each area will be the primary controlling factor with respect to sediment generation from each area. Figure 1 presents the sub-catchment areas defined on the USGS topographic map. Figure 2 contains the cross-section of the constructed pad area provided by GENWAL used to define catchment areas for the disturbed area.

Three different models were analyzed using the SEDCAD+ program; a pre-construction model, a construction model without the use of silt fences, and a construction model with the use of silt fences. In all of the models, sediment generation and delivery due to the 10-year 24-hour storm at the Crandall Canyon site was evaluated.

INCORPORATED
EFFECTIVE
JUL 30 1997
UTAH DIVISION OIL, GAS AND MINING

3.0 SEDCAD+ INPUT PARAMETERS

The SEDCAD+ program uses the Soil Conservation Service (SCS) curve number method for determining rainfall excess. Runoff curve numbers (CN) are assigned to each sub-catchment area to determine the amount of runoff originating from each catchment area. The curve numbers used in the analyses are listed below:

Table 1 - SCS Runoff Curve Numbers Used in the Analyses

Catchment Area	SCS Runoff Curve Number (CN)
South Side of Canyon	54
North Side of Canyon	69
Disturbed Area	65-80[1]
Note: [1] - CN varies depending upon slope	

Runoff curve numbers are based on soil type, slope, and vegetative cover present within each catchment area. The curve numbers assigned to each area were based on previous analyses performed for sites within the canyon and engineering judgment.

In addition to the runoff curve number, the time of concentration (t_c) needs to be input to allow the generation of runoff hydrographs (distribution of runoff through time). The SEDCAD+ program calculates the time of concentration for each sub-catchment area using the SCS Upland Curve Method. The program requires the slope and hydraulic length for each sub-catchment to be input to calculate t_c. Representative slopes, lengths, and areas were measured from the United States Geological Survey (USGS) Rilda Canyon 7.5-minute quadrangle (Scale 1:24000). The following is a summary of the values used in the analyses:

Table 2 - Hydrologic Parameters Used in the Analyses

Catchment Area	Area (acres)	Hydraulic Length (ft)	Slope (%)
1[1]	112.6 (110.6[2])	4750	40.4%
2	186.5 (184.5[2])	6750	32.7%
D (disturbed area)			
D1	0.20	70	48.6%
D2	0.40	140	14.3%
D3	0.52	180	7.2%
D4	1.06	370	1.08%
D5	0.29	100	43.0%
D6	1.39	485	1.65%
3	313.1	7000	24.6%
4	140.9	6000	26.9%
5	374.3	7000	29.7%
6	784.2	10500	22.9%
7	1191.3	10000	22.6%

Note: [1] - Area reporting to existing sediment pond is not included in this area
[2] - Areas reduced due to construction of pad

The SEDCAD+ program provides the option of using the Modified Universal Soil Loss Equation (MUSLE), the Revised Universal Soil Loss Equation (RUSLE), or the Soil LOSS routine (SLOSS) to determine sediment generation. The Revised Universal Soil Loss Equation was used in these analyses.

The Revised Universal Soil Loss Equation requires the input of several parameters for the determination of sediment generation from each sub-catchment area including the soil erodibility factor (k), the eroded soil grain size distribution, the length-slope factor (LS), and the control practice factor (CP). The SEDCAD+ program calculates the LS factor based on the input of a representative slope length and slope for each sub-catchment. These values do not necessarily correspond with the slope length and slope input for the hydrologic calculations. The following is a summary of the values used in the analyses:

INCORPORATED
EFFECTIVE:
JUL 30 1997
97B
UTAH DIVISION OIL, GAS AND MINING

Table 3 - RUSLE Input Parameters Used in the Analyses

Catchment Area	Soil Erodibility Factor K	Slope Length (ft)	Slope (%)	C-Factor	P-Factor
1	0.15	1700	47.0%	0.006[1]	1.00
2	0.15	1400	62.8%	0.003[2]	1.00
D (disturbed area)					
D1	0.15	70	48.6%	1.000	0.72[3]/0.36[4]
D2	0.15	140	14.3%	1.000	0.72[3]/0.36[4]
D3	0.15	180	7.2%	1.000	0.72[3]/0.36[4]
D4	0.15	370	1.08%	1.000	0.72[3]/0.36[4]
D5	0.15	100	43.0%	1.000	0.72[3]/0.36[4]
D6	0.15	485	1.65%	1.000	0.72[3]/0.36[4]
3	0.15	1300	43.1%	0.006	1.00
4	0.15	2300	53.0%	0.003	1.00
5	0.15	1800	46.7%	0.003	1.00
6	0.15	2300	53.0%	0.006	1.00
7	0.15	2500	39.2%	0.003	1.00

Notes: [1] - Value from Soil Conservation Service (1977) (Barfield, Warner, and Haan) for Undisturbed Woodland, 20-35% Canopy

[2] - Value from Soil Conservation Service (1977) (Barfield , Warner, and Haan) for Undisturbed woodland, 40-70% Canopy

[3] - Value from HDI (1991) for combination of rough irregular surface (P = 0.90) and use of straw bale barrier (P = 0.80)

[4] - Value from HDI (1991) for combination of rough irregular surface, use of straw bale barrier, and silt fence (P = 0.50)

In all of the cases, it was assumed a similar eroded grain size would be produced (no variation in eroded particle size from the fill or native soil was used). It is assumed that fill materials for the pad construction will be borrowed locally and thus will have a similar grain size to the native soils.

INCORPORATED
EFFECTIVE:
JUL 30 1997
97B
UTAH DIVISION OIL, GAS AND MINING

4.0 ASSUMPTIONS

The following is a summary of the assumptions made during the analyses:

- Sediment generation was calculated due to the 10-year 24-hour storm only;
- The 10-year 24-hour storm depth of rainfall for the Crandall Canyon site is 2.5 inches (from previous analyses);

- The Soil Erodibility Factor (k) for both native soils and fill materials was assumed to be 0.15 (typical for a sand or loamy sand, value used in previous analyses);
- The pad was assumed to be 125 feet wide;
- Stormwater flows from the constructed pad area are discharged directly to the creek (i.e. no stormwater flows were routed to the existing sediment pond);
- Straw bales are placed at the downstream toe of the constructed pad fill;
- When silt fences are used they are placed downstream of the hay bales;
- Final ("Ultimate") constructed slopes and slope lengths for the pad were used in the sediment generation analyses; and
- A base flow of 10 cfs and sediment concentration of 3 mg/l was used for the creek flow in all of the cases.

5.0 RESULTS OF SEDCAD+ ANALYSES

The following are the results obtained using the SEDCAD+ program:

Case	Peak Sediment Concentration (mg/l)	% Increase Over Pre-Construction Sediment Load
Pre-Construction (Existing)	7535	n/a
Construction (No Silt Fence)	11039	46.5%
Construction (w/ Silt Fence)	7543	0.1%

INCORPORATED
EFFECTIVE:
JUL 30 1997
97B
UTAH DIVISION OIL, GAS AND MINING

Case	Tonnage of Eroded Sediment	Peak Settleable Concentration (ml/l)	24-hour Volume Weighted Average Settleable Concentration (ml/l)	24-hour Arithmetic Average Settleable Concentration (ml/l)
Pre-Construction (Existing)	434.5	5.11	2.92	1.87
Construction (No Silt Fence)	443.1[1]	7.50	2.99	1.98
Construction (w/ Silt Fence)	438.4[2]	5.12	2.95	1.92

Notes: [1] - Construction disturbance contributes 8.6 tons of sediment out of the total
[2] - Construction disturbance contributes 3.9 tons of sediment out of the total

Output from the SEDCAD+ program in included in Appendix A.

6.0 CONCLUSIONS

The results of the SEDCAD+ analyses show the use of the combination of the silt fence and the hay bale barriers reduces the peak sediment concentration by approximately 30% as compared to the use of hay bale barriers alone. In addition, the tonnage of sediment eroded from the pad area is significantly reduced (3.9 tons versus 8.6 tons). The use of the combination of the silt fence and the hay bale barrier will result in a negligible increase in peak sediment concentration over the existing (non-disturbed) condition of only 0.1% if the 10-year 24-hour storm occurs during the construction of the pad. The exposure time for the sediment generation from the pad surface will be limited as the upper portion of the pad will be paved with asphalt at the end of the construction process. The paving will reduce the area contributing sediment by approximately 33%. In addition, as soon as the final pad configuration has been constructed, stormwater flows can be routed to the sediment pond.

INCORPORATED
EFFECTIVE:
JUL 30 1997
97B
UTAH DIVISION OIL, GAS AND MINING

7.0 REFERENCES

Barfield, B.J., Warner, R.C., and C.T. Haan (1981); Applied Hydrology and Sedimentology for Disturbed Areas; Oklahoma Technical Press, Stillwater OK.

Fifield, J.S.; (1992); Course Notes, *Practical Approaches for Effective Erosion and Sediment Control*; Denver, CO.

Gray, Gary (1997); Personal Communication, GENWAL Resources, Huntington, UT.

Warner, R.C., and P.J. Schwab (1992); SEDCAD+ Version 3 Training Manual; Civil Software Design, Ames, IA.

INCORPORATED
EFFECTIVE:
JUL 30 1997
97B
UTAH DIVISION OIL, GAS AND MINING

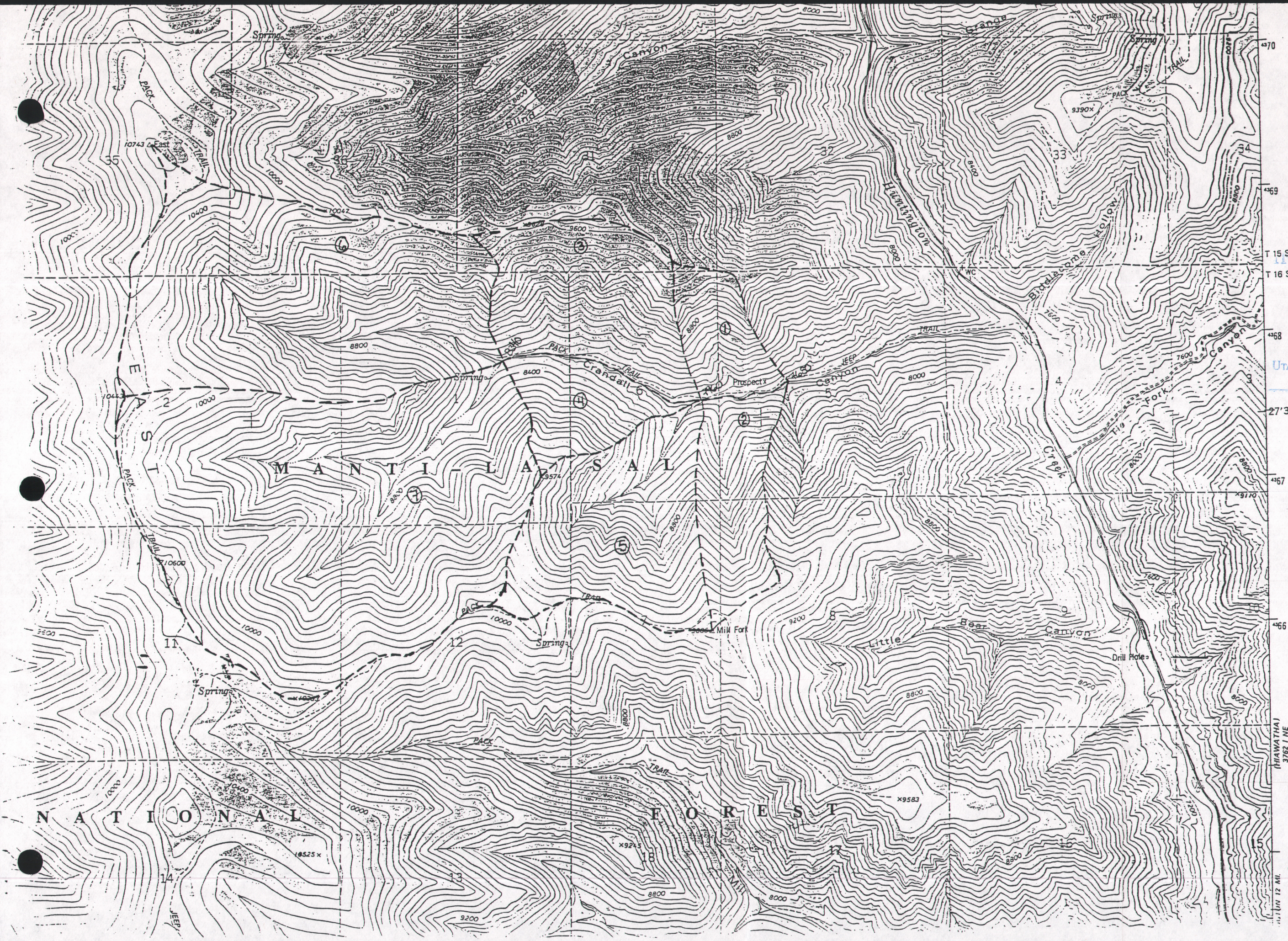

INCORPORATED
EFFECTIVE:
JUL 30 1997
97B
UTAH DIVISION OIL, GAS AND MINING

FIGURE 1
SUB-CATCHMENT AREAS USED IN SEDCAD+ ANALYSES

PAD PROFILE

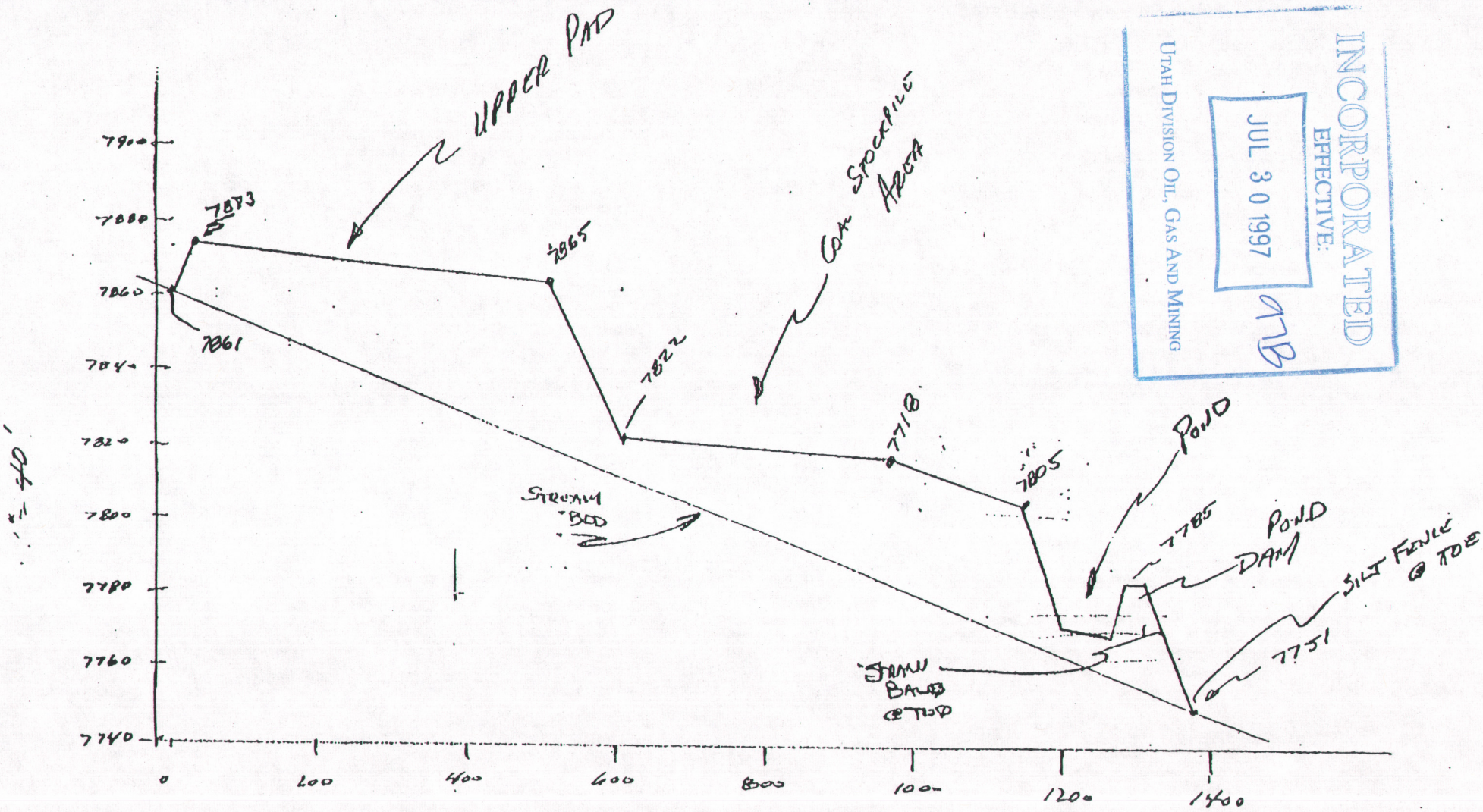

1" = 200'

NOTE: ASSUMING PAD WIDTH = 125 FT.

FIGURE 2
PAD CROSS-SECTION
(PROVIDED BY GENWAL)

INCORPORATED
EFFECTIVE:
JUL 30 1997
UTAH DIVISION OIL, GAS AND MINING

INCORPORATED
EFFECTIVE:
JUL 30 1997
97B
UTAH DIVISION OIL, GAS AND MINING

APPENDIX A

SEDCAD+ OUTPUT

INCORPORATED
EFFECTIVE:
JUL 30 1997
97B
UTAH DIVISION OIL, GAS AND MINING

SEDCAD+
PRE-CONSTRUCTION (EXISTING) MODEL

INCORPORATED
EFFECTIVE:
JUL 30 1997
97B
UTAH DIVISION OIL, GAS AND MINING

CIVIL SOFTWARE DESIGN

SEDCAD+ Version 3

CRANDALL CANYON - EXISTING SEDIMENT DUE TO 10-YR 24-HR STORM (2.5")

by

Name: PETE KOWALEWSKI

Company Name: STEFFEN, ROBERTSON, KIRSTEN
File Name: C:\SEDCAD3\GENWAL1A

Date: 06-04-1997

Civil Software Design -- SEDCAD+ Version 3.1
Copyright (C) 1987-1992. Pamela J. Schwab. All rights reserved.

Company Name: STEFFEN, ROBERTSON, KIRSTEN
Filename: C:\SEDCAD3\GENWAL1A User: PETE KOWALEWSKI
Date: 06-04-1997 Time: 08:15:35
CRANDALL CANYON - EXISTING SEDIMENT DUE TO 10-YR 24-HR STORM (2.5")
Storm: 2.50 inches, 10 year-24 hour, SCS Type II
Hydrograph Convolution Interval: 0.1 hr

INCORPORATED
EFFECTIVE:
JUL 3 0 1997
97B
UTAH DIVISION OIL, GAS AND MINING

GENERAL INPUT TABLE

Specific Gravity: 2.50
Submerged Bulk Specific Gravity: 1.25

Particle Size Distribution(s):

Size (mm)	FILL SOIL % Finer
1.0000	95.00
0.5000	75.00
0.2500	50.00
0.1000	25.00
0.0500	10.00
0.0100	5.00
0.0050	3.00
0.0010	0.00

Detailed Between Structure Routing:

J	B	To S	Seg. #	Land Flow Condition	Distance (ft)	Slope (%)	Velocity (fps)	Segment Time (hr)	Muskingum K (hr)	Muskingum X
2	1	1	1	8	4889.77	7.79	8.37	0.16	0.161	0.415
3	1	1	1	8	2267.23	12.40	10.56	0.06	0.059	0.430
4	1	1	1	8	50.38	12.40	10.56	0.00	0.001	0.430

Civil Software Design -- SEDCAD+ Version 3.1
Copyright (C) 1987-1992. Pamela J. Schwab. All rights reserved.

Company Name: STEFFEN, ROBERTSON, KIRSTEN
Filename: C:\SEDCAD3\GENWAL1A User: PETE KOWALEWSKI
Date: 06-04-1997 Time: 08:15:35
CRANDALL CANYON - EXISTING SEDIMENT DUE TO 10-YR 24-HR STORM (2.5")
Storm: 2.50 inches, 10 year-24 hour, SCS Type II
Hydrograph Convolution Interval: 0.1 hr

INCORPORATED
EFFECTIVE:
JUL 30 1997
97B
UTAH DIVISION OIL, GAS AND MINING

SUBWATERSHED/STRUCTURE INPUT/OUTPUT TABLE

-Hydrology-

JBS	SWS	Area (ac)	CN	UHS	Tc (hrs)	K (hrs)	X	Base-Flow (cfs)	Runoff Volume (ac-ft)	Peak Discharge (cfs)
111	1	784.20	69	M	2.409	0.000	0.000	0.0	27.50	51.27
111	2	1191.30	54	M	2.309	0.000	0.000	0.0	6.76	7.15
	Type: Nonerodible Channel Label: UPPER CREEK SECTION									
111	Structure	1975.50							34.26	
111	Total IN/OUT	1975.50							34.26	54.38
211	1	313.10	69	M	1.549	0.000	0.000	0.0	10.98	27.19
211	2	140.90	54	M	1.270	0.000	0.000	0.0	0.80	0.95
211	3	374.30	54	M	1.410	0.000	0.000	0.0	2.12	2.48
	Type: Nonerodible Channel Label: MIDDLE CREEK SECTION									
211	Structure	828.30							48.16	
211	Total IN/OUT	2803.80							48.16	78.68
111 to 211 Routing						0.161	0.415			
311	1	112.60	69	M	0.820	0.000	0.000	10.0	3.95	14.71
311	2	186.50	54	M	1.296	0.000	0.000	0.0	1.06	1.25
	Type: Nonerodible Channel Label: LOWER CREEK SECTION									
311	Structure	299.10							53.17	
311	Total IN/OUT	3102.90							53.17	96.91
211 to 311 Routing						0.059	0.430			
	Type: Nonerodible Channel Label: LOWER CREEK SECTION									
411	Structure	299.10							53.17	
411	Total IN/OUT	3102.90							53.17	96.91
311 to 411 Routing						0.001	0.430			

SUBWATERSHED/STRUCTURE INPUT/OUTPUT TABLE

-Sedimentology-

SED: Sediment
SCp: Peak Sediment Concentration
SSp: Peak Settleable Concentration
24VW: Volume Weighted Average Settleable Concentration - Peak 24 hours
24AA: Arithmetic Average Settleable Concentration - Peak 24 hours

	JBS	SWS	K	L (ft)	S (%)	CP	Tt (hrs)	PS #	SED (tons)	SCp (mg/l)	SSp (ml/l)	24VW (ml/l)	24AA (ml/l)
R	111	1	0.15	2300.0	53.0	0.006	0.000	1	296.0				

INCORPORATED
EFFECTIVE:
JUL 3 0 1997
UTAH DIVISION OIL, GAS AND MINING

```
R 111  2   0.15 2500.0  39.2 0.003  0.000 1   17.9
            Type: Nonerodible Channel   Label: UPPER CREEK SECTION
  111 Structure                                314.0
  ---------------------------------------------------------------------------
  111 Total IN/OUT                             314.0   10493   7.04   4.50   2.69
  ===========================================================================
R 211  1   0.15 1300.0  43.1 0.006  0.000 1   73.5
R 211  2   0.15 2300.0  53.0 0.003  0.000 1    2.2
R 211  3   0.15 1800.0  46.7 0.003  0.000 1    5.0
            Type: Nonerodible Channel   Label: MIDDLE CREEK SECTION
  211 Structure                                394.7
  ---------------------------------------------------------------------------
  211 Total IN/OUT                             394.7    9095   6.14   4.05   2.42
  ===========================================================================
  111 to 211 Routing                 0.161
  ===========================================================================
R 311  1   0.15 1700.0  47.0 0.006  0.000 1   37.3 (Base Conc.       3 mg/l)
R 311  2   0.15 1400.0  62.8 0.003  0.000 1    2.5
            Type: Nonerodible Channel   Label: LOWER CREEK SECTION
  311 Structure                                434.5
  ---------------------------------------------------------------------------
  311 Total IN/OUT                             434.5    7535   5.11   2.92   1.87
  ===========================================================================
  211 to 311 Routing                 0.059
  ===========================================================================
            Type: Nonerodible Channel   Label: LOWER CREEK SECTION
  411 Structure                                434.5
  ---------------------------------------------------------------------------
  411 Total IN/OUT                             434.5    7535   5.11   2.92   1.87
  ===========================================================================
  311 to 411 Routing                 0.001
  ===========================================================================
```

Civil Software Design -- SEDCAD+ Version 3.1
Copyright (C) 1987-1992. Pamela J. Schwab. All rights reserved.

Company Name: STEFFEN, ROBERTSON, KIRSTEN
Filename: C:\SEDCAD3\GENWAL1A User: PETE KOWALEWSKI
Date: 06-04-1997 Time: 08:15:35
CRANDALL CANYON - EXISTING SEDIMENT DUE TO 10-YR 24-HR STORM (2.5")
Storm: 2.50 inches, 10 year-24 hour, SCS Type II
Hydrograph Convolution Interval: 0.1 hr

INCORPORATED
EFFECTIVE:
JUL 30 1997
97B
UTAH DIVISION OIL, GAS AND MINING

DETAILED SUBWATERSHED INPUT/OUTPUT TABLE

J	B	S	SWS	Seg. #	Land Flow Condition	Distance (ft)	Slope (%)	Velocity (fps)	Segment Time (hr)	Time Conc. (hr)	Muskingum K (hr)	Muskingum X
1	1	1	1	-a	1	10500.00	22.90	1.21	2.41	2.409		
1	1	1	2	-a	1	10000.00	22.60	1.20	2.31	2.309		
2	1	1	1	-a	1	7000.00	24.60	1.25	1.55	1.549		
2	1	1	2	-a	1	6000.00	26.90	1.31	1.27	1.270		
2	1	1	3	-a	1	7000.00	29.70	1.38	1.41	1.410		
3	1	1	1	-a	1	4750.00	40.40	1.61	0.82	0.820		
3	1	1	2	-a	1	6750.00	32.70	1.45	1.30	1.296		

Civil Software Design -- SEDCAD+ Version 3.1
Copyright (C) 1987-1992. Pamela J. Schwab. All rights reserved.

Company Name: STEFFEN, ROBERTSON, KIRSTEN
Filename: C:\SEDCAD3\GENWAL1A User: PETE KOWALEWSKI
Date: 06-04-1997 Time: 08:15:35
CRANDALL CANYON - EXISTING SEDIMENT DUE TO 10-YR 24-HR STORM (2.5")
Storm: 2.50 inches, 10 year-24 hour, SCS Type II
Hydrograph Convolution Interval: 0.1 hr

INCORPORATED
EFFECTIVE:
JUL 30 1997
UTAH DIVISION OIL, GAS AND MINING

==========
NON-POND STRUCTURE INPUT/OUTPUT TABLE
==========

J1, B1, S1
UPPER CREEK SECTION

Drainage Area from J1, B1, S1, SWS(s)1-2: 1975.5 acres
Total Contributing Drainage Area: 1975.5 acres

MATERIAL: NATURAL CREEK BED
Trapezoidal Nonerodible Channel

Design Discharge (cfs)	Bottom Width (ft)	ZLeft	ZRight	Slope (%)	Manning's n
54.38	25.0	2.0:1	2.0:1	7.8	0.040

	Depth (ft)	Velocity (fps)	Top Width (ft)	Hydraulic Radius	Froude Number
	0.39	5.41	26.6	0.376	1.55
w/ Freeboard:	0.39		26.6		

	Runoff Volume (ac-ft)	Peak Discharge (cfs)	Sediment (tons)	Peak Sediment Concentration (mg/l)	Peak Settleable Concentration (ml/l)	24VW (ml/l)	24AA (ml/l)
IN/OUT	34.26	54.38	314.0	10493	7.04	4.50	2.69

****

J2, B1, S1
MIDDLE CREEK SECTION

Drainage Area from J2, B1, S1, SWS(s)1-3: 828.3 acres
Total Contributing Drainage Area: 2803.8 acres

MATERIAL: NATURAL CREEK BED
Trapezoidal Nonerodible Channel

Design Discharge (cfs)	Bottom Width (ft)	ZLeft	ZRight	Slope (%)	Manning's n
78.68	25.0	2.0:1	2.0:1	12.4	0.040

	Depth (ft)	Velocity (fps)	Top Width (ft)	Hydraulic Radius	Froude Number
	0.42	7.20	26.7	0.406	1.98
w/ Freeboard:	0.42		26.7		

	Runoff Volume (ac-ft)	Peak Discharge (cfs)	Sediment (tons)	Peak Sediment Concentration (mg/l)	Peak Settleable Concentration (ml/l)	24VW (ml/l)	24AA (ml/l)
IN/OUT	48.16	78.68	394.7	9095	6.14	4.05	2.42

****

J3, B1, S1
LOWER CREEK SECTION

Drainage Area from J3, B1, S1, SWS(s)1-2: 299.1 acres
Total Contributing Drainage Area: 3102.9 acres

INCORPORATED
EFFECTIVE:
JUL 3 0 1997
UTAH DIVISION OIL, GAS AND MINING

97B

MATERIAL: NATURAL CREEK BED
Trapezoidal Nonerodible Channel

Design Discharge (cfs)	Bottom Width (ft)	ZLeft	ZRight	Slope (%)	Manning's n
96.91	25.0	2.0:1	2.0:1	12.4	0.040

	Depth (ft)	Velocity (fps)	Top Width (ft)	Hydraulic Radius	Froude Number
	0.48	7.79	26.9	0.458	2.02
w/ Freeboard:	0.48		26.9		

	Runoff Volume (ac-ft)	Peak Discharge (cfs)	Sediment (tons)	Peak Sediment Concentration (mg/l)	Peak Settleable Concentration (ml/l)	24VW (ml/l)	24AA (ml/l)
IN/OUT	53.17	96.91	434.5	7535	5.11	2.92	1.87

****

J4, B1, S1
LOWER CREEK SECTION

Drainage Area from J4, B1, S1 299.1 acres
Total Contributing Drainage Area: 3102.9 acres

MATERIAL: NATURAL CREEK BED
Trapezoidal Nonerodible Channel

Design Discharge (cfs)	Bottom Width (ft)	ZLeft	ZRight	Slope (%)	Manning's n
96.91	25.0	2.0:1	2.0:1	12.4	0.040

	Depth (ft)	Velocity (fps)	Top Width (ft)	Hydraulic Radius	Froude Number
	0.48	7.79	26.9	0.458	2.02
w/ Freeboard:	0.48		26.9		

	Runoff Volume (ac-ft)	Peak Discharge (cfs)	Sediment (tons)	Peak Sediment Concentration (mg/l)	Peak Settleable Concentration (ml/l)	24VW (ml/l)	24AA (ml/l)
IN/OUT	53.17	96.91	434.5	7535	5.11	2.92	1.87

****

INCORPORATED
EFFECTIVE:
JUL 30 1997
97B
UTAH DIVISION OIL, GAS AND MINING

SEDCAD+
CONSTRUCTION MODEL
(NO SILT FENCE)

INCORPORATED
EFFECTIVE:
JUL 3 0 1997
97B
UTAH DIVISION OIL, GAS AND MINING

CIVIL SOFTWARE DESIGN

SEDCAD+ Version 3

CRANDALL CANYON - SEDIMENT GENERATION 10-YR 24-HR STORM- NO SILT FENCE

by

Name: PETE KOWALEWSKI

Company Name: STEFFEN, ROBERTSON, KIRSTEN
File Name: C:\SEDCAD3\GENWAL2A

Date: 06-04-1997

INCORPORATED
EFFECTIVE:
JUL 30 1997
UTAH DIVISION OIL, GAS AND MINING

97B

Civil Software Design -- SEDCAD+ Version 3.1
Copyright (C) 1987-1992. Pamela J. Schwab. All rights reserved.

Company Name: STEFFEN, ROBERTSON, KIRSTEN
Filename: C:\SEDCAD3\GENWAL2A User: PETE KOWALEWSKI
Date: 06-04-1997 Time: 08:18:16
CRANDALL CANYON - SEDIMENT GENERATION 10-YR 24-HR STORM- NO SILT FENCE
Storm: 2.50 inches, 10 year-24 hour, SCS Type II
Hydrograph Convolution Interval: 0.1 hr

GENERAL INPUT TABLE

Specific Gravity: 2.50
Submerged Bulk Specific Gravity: 1.25

Particle Size Distribution(s):

Size (mm)	FILL SOIL % Finer
1.0000	95.00
0.5000	75.00
0.2500	50.00
0.1000	25.00
0.0500	10.00
0.0100	5.00
0.0050	3.00
0.0010	0.00

Detailed Between Structure Routing:

J	B	To S	Seg. #	Land Flow Condition	Distance (ft)	Slope (%)	Velocity (fps)	Segment Time (hr)	Muskingum K (hr)	Muskingum X
2	1	1	1	8	4889.81	7.80	8.38	0.16	0.161	0.415
3	1	1	1	8	2267.23	12.40	10.56	0.06	0.059	0.430
4	1	1	1	8	50.38	12.40	10.56	0.00	0.001	0.430

INCORPORATED
EFFECTIVE:
JUL 30 1997
97B
UTAH DIVISION OIL, GAS AND MINING

Civil Software Design -- SEDCAD+ Version 3.1
Copyright (C) 1987-1992. Pamela J. Schwab. All rights reserved.

Company Name: STEFFEN, ROBERTSON, KIRSTEN
Filename: C:\SEDCAD3\GENWAL2A User: PETE KOWALEWSKI
Date: 06-04-1997 Time: 08:18:16
CRANDALL CANYON - SEDIMENT GENERATION 10-YR 24-HR STORM- NO SILT FENCE
Storm: 2.50 inches, 10 year-24 hour, SCS Type II
Hydrograph Convolution Interval: 0.1 hr

SUBWATERSHED/STRUCTURE INPUT/OUTPUT TABLE

-Hydrology-

JBS	SWS	Area (ac)	CN	UHS	Tc (hrs)	K (hrs)	X	Base-Flow (cfs)	Runoff Volume (ac-ft)	Peak Discharge (cfs)
111	1	784.20	69	M	2.409	0.000	0.000	0.0	27.50	51.27
111	2	1191.30	54	M	2.309	0.000	0.000	0.0	6.76	7.15
Type: Nonerodible Channel Label: UPPER CREEK SECTION										
111	Structure	1975.50							34.26	
111	Total IN/OUT	1975.50							34.26	54.38
211	1	313.10	69	M	1.549	0.000	0.000	0.0	10.98	27.19
211	2	140.90	54	M	1.270	0.000	0.000	0.0	0.80	0.95
211	3	374.30	54	M	1.410	0.000	0.000	0.0	2.12	2.48
Type: Nonerodible Channel Label: MIDDLE CREEK SECTION										
211	Structure	828.30							48.16	
211	Total IN/OUT	2803.80							48.16	78.68
111 to 211 Routing						0.161	0.415			
311	1	110.60	69	M	0.820	0.000	0.000	10.0	3.88	14.45
311	2	184.50	54	M	1.296	0.000	0.000	0.0	1.05	1.24
311	3	0.20*	65	M	0.002	0.000	0.000	0.0	0.00	0.06
311	4	0.40*	77	M	0.010	0.002	0.401	0.0	0.02	0.33
311	5	0.52*	77	M	0.018	0.013	0.370	0.0	0.03	0.43
311	6	1.06*	75	M	0.098	0.031	0.346	0.0	0.06	0.77
311	7	0.29*	80	M	0.004	0.130	0.296	0.0	0.02	0.28
311	8	1.39*	75	M	0.104	0.132	0.302	0.0	0.08	1.01
Type: Nonerodible Channel Label: LOWER CREEK SECTION										
311	Structure	298.96							53.30	
311	Total IN/OUT	3102.76							53.30	96.97
211 to 311 Routing						0.059	0.430			
Type: Nonerodible Channel Label: LOWER CREEK SECTION										
411	Structure	298.96							53.30	
411	Total IN/OUT	3102.76							53.30	96.97
311 to 411 Routing						0.001	0.430			

SUBWATERSHED/STRUCTURE INPUT/OUTPUT TABLE

-Sedimentology-

SED: Sediment
SCp: Peak Sediment Concentration
SSp: Peak Settleable Concentration
24VW: Volume Weighted Average Settleable Concentration - Peak 24 hours
24AA: Arithmetic Average Settleable Concentration - Peak 24 hours

INCORPORATED
EFFECTIVE:
JUL 3 0 1997
UTAH DIVISION OIL, GAS AND MINING

97B

```
                                                PS
  JBS SWS   K     L      S    CP     Tt    #  SED     SCp    SSp    24VW   24AA
                (ft)   (%)          (hrs)    (tons)  (mg/l) (ml/l) (ml/l) (ml/l)
  ==========================================================================
R 111  1   0.15 2300.0  53.0 0.006  0.000 1  296.0
R 111  2   0.15 2500.0  39.2 0.003  0.000 1   17.9
           Type: Nonerodible Channel   Label: UPPER CREEK SECTION
  111 Structure                             314.0
  --------------------------------------------------------------------------
  111 Total IN/OUT                          314.0   10493   7.04   4.50   2.69
  ==========================================================================
R 211  1   0.15 1300.0  43.1 0.006  0.000 1   73.5
R 211  2   0.15 2300.0  53.0 0.003  0.000 1    2.2
R 211  3   0.15 1800.0  46.7 0.003  0.000 1    5.0
           Type: Nonerodible Channel   Label: MIDDLE CREEK SECTION
  211 Structure                             394.7
  --------------------------------------------------------------------------
  211 Total IN/OUT                          394.7    9095   6.14   4.05   2.42
  ==========================================================================
  111 to 211 Routing              0.161
  ==========================================================================
R 311  1   0.15 1700.0  47.0 0.006  0.000 1   36.6 (Base Conc.       3 mg/l)
R 311  2   0.15 1400.0  62.8 0.003  0.000 1    2.5
R 311  3   0.15   70.0  48.6 0.720  0.000 1    0.7
R 311  4   0.15  140.0  14.3 0.720  0.002 1    1.9
R 311  5   0.15  180.0   7.2 0.720  0.013 1    1.1
R 311  6   0.15  370.0   1.1 0.720  0.031 1    0.4
R 311  7   0.15  100.0  43.0 0.720  0.130 1    4.4
R 311  8   0.15  485.0   1.6 0.720  0.132 1    0.8
           Type: Nonerodible Channel   Label: LOWER CREEK SECTION
  311 Structure                             443.1
  --------------------------------------------------------------------------
  311 Total IN/OUT                          443.1   11039   7.50   2.99   1.98
  ==========================================================================
  211 to 311 Routing              0.059
  ==========================================================================
           Type: Nonerodible Channel   Label: LOWER CREEK SECTION
  411 Structure                             443.1
  --------------------------------------------------------------------------
  411 Total IN/OUT                          443.1   11039   7.50   2.99   1.98
  ==========================================================================
  311 to 411 Routing              0.001
  ==========================================================================
```

INCORPORATED
EFFECTIVE:
JUL 30 1997
97B
UTAH DIVISION OIL, GAS AND MINING

Civil Software Design -- SEDCAD+ Version 3.1
Copyright (C) 1987-1992. Pamela J. Schwab. All rights reserved.

Company Name: STEFFEN, ROBERTSON, KIRSTEN
Filename: C:\SEDCAD3\GENWAL2A User: PETE KOWALEWSKI
Date: 06-04-1997 Time: 08:18:16
CRANDALL CANYON - SEDIMENT GENERATION 10-YR 24-HR STORM- NO SILT FENCE
Storm: 2.50 inches, 10 year-24 hour, SCS Type II
Hydrograph Convolution Interval: 0.1 hr

DETAILED SUBWATERSHED INPUT/OUTPUT TABLE

J	B	S	SWS	Seg. #	Land Flow Condition	Distance (ft)	Slope (%)	Velocity (fps)	Segment Time (hr)	Time Conc. (hr)	Muskingum K (hr)	Muskingum X
1	1	1	1	-a	1	10500.00	22.90	1.21	2.41	2.409		
1	1	1	2	-a	1	10000.00	22.60	1.20	2.31	2.309		
2	1	1	1	-a	1	7000.00	24.60	1.25	1.55	1.549		
2	1	1	2	-a	1	6000.00	26.90	1.31	1.27	1.270		
2	1	1	3	-a	1	7000.00	29.70	1.38	1.41	1.410		
3	1	1	1	-a	1	4750.00	40.40	1.61	0.82	0.820		
3	1	1	2	-a	1	6750.00	32.70	1.45	1.30	1.296		
3	1	1	3	-a	5	70.00	48.60	6.97	0.00	0.002		
3	1	1	4	-a	5	140.00	14.30	3.78	0.01	0.010		
3	1	1	4	-1	5	77.83	48.60	6.97	0.00		0.002	0.401
3	1	1	5	-a	5	180.00	7.20	2.68	0.02	0.018		
3	1	1	5	-1	5	141.42	14.30	3.78	0.01			
				-2	5	77.83	48.60	6.97	0.00		0.013	0.370
3	1	1	6	-a	5	370.00	1.08	1.04	0.10	0.098		
3	1	1	6	-1	5	180.47	7.20	2.68	0.02			
				-2	5	141.42	14.30	3.78	0.01			
				-3	5	77.83	48.60	6.97	0.00		0.031	0.346
3	1	1	7	-a	5	100.00	43.00	6.56	0.00	0.004		
3	1	1	7	-1	5	370.02	1.08	1.04	0.10			
				-2	5	180.47	7.20	2.68	0.02			
				-3	5	141.42	14.30	3.78	0.01			
				-4	5	77.83	48.60	6.97	0.00		0.130	0.296
3	1	1	8	-a	5	485.00	1.65	1.28	0.10	0.104		
3	1	1	8	-1	5	108.85	43.00	6.56	0.00			
				-2	5	370.02	1.08	1.04	0.10			
				-3	5	180.47	7.20	2.68	0.02			
				-4	5	141.42	14.30	3.78	0.01		0.132	0.302

INCORPORATED
EFFECTIVE:
JUL 30 1997
97B
UTAH DIVISION OIL, GAS AND MINING

Civil Software Design -- SEDCAD+ Version 3.1
Copyright (C) 1987-1992. Pamela J. Schwab. All rights reserved.

Company Name: STEFFEN, ROBERTSON, KIRSTEN
Filename: C:\SEDCAD3\GENWAL2A User: PETE KOWALEWSKI
Date: 06-04-1997 Time: 08:18:16
CRANDALL CANYON - SEDIMENT GENERATION 10-YR 24-HR STORM- NO SILT FENCE
Storm: 2.50 inches, 10 year-24 hour, SCS Type II
Hydrograph Convolution Interval: 0.1 hr

NON-POND STRUCTURE INPUT/OUTPUT TABLE

J1, B1, S1
UPPER CREEK SECTION

Drainage Area from J1, B1, S1, SWS(s)1-2: 1975.5 acres
Total Contributing Drainage Area: 1975.5 acres

MATERIAL: NATURAL CHANNEL BED
Trapezoidal Nonerodible Channel

Design Discharge (cfs)	Bottom Width (ft)	ZLeft	ZRight	Slope (%)	Manning's n
54.38	25.0	2.0:1	2.0:1	7.8	0.040

	Depth (ft)	Velocity (fps)	Top Width (ft)	Hydraulic Radius	Froude Number
	0.39	5.41	26.6	0.376	1.55
w/ Freeboard:	0.39		26.6		

	Runoff Volume (ac-ft)	Peak Discharge (cfs)	Sediment (tons)	Peak Sediment Concentration (mg/l)	Peak Settleable Concentration (ml/l)	24VW (ml/l)	24AA (ml/l)
IN/OUT	34.26	54.38	314.0	10493	7.04	4.50	2.69

J2, B1, S1
MIDDLE CREEK SECTION

Drainage Area from J2, B1, S1, SWS(s)1-3: 828.3 acres
Total Contributing Drainage Area: 2803.8 acres

MATERIAL: NATURAL CHANNEL BED
Trapezoidal Nonerodible Channel

Design Discharge (cfs)	Bottom Width (ft)	ZLeft	ZRight	Slope (%)	Manning's n
78.68	25.0	2.0:1	2.0:1	12.4	0.040

	Depth (ft)	Velocity (fps)	Top Width (ft)	Hydraulic Radius	Froude Number
	0.42	7.20	26.7	0.406	1.98
w/ Freeboard:	0.42		26.7		

	Runoff Volume (ac-ft)	Peak Discharge (cfs)	Sediment (tons)	Peak Sediment Concentration (mg/l)	Peak Settleable Concentration (ml/l)	24VW (ml/l)	24AA (ml/l)
IN/OUT	48.16	78.68	394.7	9095	6.14	4.05	2.42

INCORPORATED
EFFECTIVE:
JUL 30 1997
97B
UTAH DIVISION OIL, GAS AND MINING

****

J3, B1, S1
LOWER CREEK SECTION

Drainage Area from J3, B1, S1, SWS(s)1-8: 299.0 acres
Total Contributing Drainage Area: 3102.8 acres

MATERIAL: NATURAL CHANNEL BED
Trapezoidal Nonerodible Channel

Design Discharge (cfs)	Bottom Width (ft)	ZLeft	ZRight	Slope (%)	Manning's n
96.97	25.0	2.0:1	2.0:1	12.4	0.040

	Depth (ft)	Velocity (fps)	Top Width (ft)	Hydraulic Radius	Froude Number
	0.48	7.80	26.9	0.458	2.02
w/ Freeboard:	0.48		26.9		

	Runoff Volume (ac-ft)	Peak Discharge (cfs)	Sediment (tons)	Peak Sediment Concentration (mg/l)	Peak Settleable Concentration (ml/l)	24VW (ml/l)	24AA (ml/l)
IN/OUT	53.30	96.97	443.1	11039	7.50	2.99	1.98

****

J4, B1, S1
LOWER CREEK SECTION

Drainage Area from J4, B1, S1 299.0 acres
Total Contributing Drainage Area: 3102.8 acres

MATERIAL: NATURAL CHANNEL BED
Trapezoidal Nonerodible Channel

Design Discharge (cfs)	Bottom Width (ft)	ZLeft	ZRight	Slope (%)	Manning's n
96.97	25.0	2.0:1	2.0:1	12.4	0.040

	Depth (ft)	Velocity (fps)	Top Width (ft)	Hydraulic Radius	Froude Number
	0.48	7.80	26.9	0.458	2.02
w/ Freeboard:	0.48		26.9		

	Runoff Volume (ac-ft)	Peak Discharge (cfs)	Sediment (tons)	Peak Sediment Concentration (mg/l)	Peak Settleable Concentration (ml/l)	24VW (ml/l)	24AA (ml/l)
IN/OUT	53.30	96.97	443.1	11039	7.50	2.99	1.98

****

INCORPORATED
EFFECTIVE:
JUL 30 1997
97B
UTAH DIVISION OIL, GAS AND MINING

SEDCAD+
CONSTRUCTION MODEL
(WITH SILT FENCE)

INCORPORATED
EFFECTIVE:
JUL 30 1997
97B
UTAH DIVISION OIL, GAS AND MINING

CIVIL SOFTWARE DESIGN

SEDCAD+ Version 3

CRANDALL CANYON - SEDIMENT GENERATION 10-YR 24-HR STORM- W/ SILT FENCE

by

Name: PETE KOWALEWSKI

Company Name: STEFFEN, ROBERTSON, KIRSTEN
File Name: C:\SEDCAD3\GENWAL3A

Date: 06-04-1997

INCORPORATED
EFFECTIVE:
JUL 30 1997
97B
UTAH DIVISION OIL, GAS AND MINING

Civil Software Design -- SEDCAD+ Version 3.1
Copyright (C) 1987-1992. Pamela J. Schwab. All rights reserved.

Company Name: STEFFEN, ROBERTSON, KIRSTEN
Filename: C:\SEDCAD3\GENWAL3A User: PETE KOWALEWSKI
Date: 06-04-1997 Time: 08:18:20
CRANDALL CANYON - SEDIMENT GENERATION 10-YR 24-HR STORM- W/ SILT FENCE
Storm: 2.50 inches, 10 year-24 hour, SCS Type II
Hydrograph Convolution Interval: 0.1 hr

GENERAL INPUT TABLE

Specific Gravity: 2.50
Submerged Bulk Specific Gravity: 1.25

Particle Size Distribution(s):

Size (mm)	FILL SOIL % Finer
1.0000	95.00
0.5000	75.00
0.2500	50.00
0.1000	25.00
0.0500	10.00
0.0100	5.00
0.0050	3.00
0.0010	0.00

Detailed Between Structure Routing:

J	B	To S	Seg. #	Land Flow Condition	Distance (ft)	Slope (%)	Velocity (fps)	Segment Time (hr)	Muskingum K (hr)	Muskingum X
2	1	1	1	8	4889.81	7.80	8.38	0.16	0.161	0.415
3	1	1	1	8	2267.23	12.40	10.56	0.06	0.059	0.430
4	1	1	1	8	50.38	12.40	10.56	0.00	0.001	0.430

Civil Software Design -- SEDCAD+ Version 3.1
Copyright (C) 1987-1992. Pamela J. Schwab. All rights reserved.

Company Name: STEFFEN, ROBERTSON, KIRSTEN
Filename: C:\SEDCAD3\GENWAL3A User: PETE KOWALEWSKI
Date: 06-04-1997 Time: 08:18:20
CRANDALL CANYON - SEDIMENT GENERATION 10-YR 24-HR STORM- W/ SILT FENCE
Storm: 2.50 inches, 10 year-24 hour, SCS Type II
Hydrograph Convolution Interval: 0.1 hr

INCORPORATED
EFFECTIVE:
JUL 30 1997
9713
UTAH DIVISION OIL, GAS AND MINING

SUBWATERSHED/STRUCTURE INPUT/OUTPUT TABLE

-Hydrology-

JBS	SWS	Area (ac)	CN	UHS	Tc (hrs)	K (hrs)	X	Base-Flow (cfs)	Runoff Volume (ac-ft)	Peak Discharge (cfs)
111	1	784.20	69	M	2.409	0.000	0.000	0.0	27.50	51.27
111	2	1191.30	54	M	2.309	0.000	0.000	0.0	6.76	7.15
Type: Nonerodible Channel Label: UPPER CREEK SECTION										
111	Structure	1975.50							34.26	
111	Total IN/OUT	1975.50							34.26	54.38
211	1	313.10	69	M	1.549	0.000	0.000	0.0	10.98	27.19
211	2	140.90	54	M	1.270	0.000	0.000	0.0	0.80	0.95
211	3	374.30	54	M	1.410	0.000	0.000	0.0	2.12	2.48
Type: Nonerodible Channel Label: MIDDLE CREEK SECTION										
211	Structure	828.30							48.16	
211	Total IN/OUT	2803.80							48.16	78.68
111 to 211 Routing						0.161	0.415			
311	1	110.60	69	M	0.820	0.000	0.000	10.0	3.88	14.45
311	2	184.50	54	M	1.296	0.000	0.000	0.0	1.05	1.24
311	3	0.20*	65	M	0.002	0.000	0.000	0.0	0.00	0.06
311	4	0.40*	77	M	0.010	0.002	0.401	0.0	0.02	0.33
311	5	0.52*	77	M	0.018	0.013	0.370	0.0	0.03	0.43
311	6	1.06*	75	M	0.098	0.031	0.346	0.0	0.06	0.77
311	7	0.29*	80	M	0.004	0.130	0.296	0.0	0.02	0.28
311	8	1.39*	75	M	0.104	0.132	0.302	0.0	0.08	1.01
Type: Nonerodible Channel Label: LOWER CREEK SECTION										
311	Structure	298.96							53.30	
311	Total IN/OUT	3102.76							53.30	96.97
211 to 311 Routing						0.059	0.430			
Type: Nonerodible Channel Label: LOWER CREEK SECTION										
411	Structure	298.96							53.30	
411	Total IN/OUT	3102.76							53.30	96.97
311 to 411 Routing						0.001	0.430			

SUBWATERSHED/STRUCTURE INPUT/OUTPUT TABLE

-Sedimentology-

SED: Sediment
SCp: Peak Sediment Concentration
SSp: Peak Settleable Concentration
24VW: Volume Weighted Average Settleable Concentration - Peak 24 hours
24AA: Arithmetic Average Settleable Concentration - Peak 24 hours

INCORPORATED
EFFECTIVE:
JUL 30 1997
DIVISION OIL, GAS AND MINING
UTAH

97B

```
                                                PS
  JBS SWS   K      L       S     CP      Tt    #  SED      SCp     SSp     24VW    24AA
                  (ft)    (%)          (hrs)     (tons)  (mg/l)  (ml/l)  (ml/l)  (ml/l)
  ==========================================================================================
R 111  1   0.15 2300.0  53.0 0.006  0.000 1   296.0
R 111  2   0.15 2500.0  39.2 0.003  0.000 1    17.9
           Type: Nonerodible Channel   Label: UPPER CREEK SECTION
  111 Structure                              314.0
  ------------------------------------------------------------------------------------------
  111 Total IN/OUT                           314.0   10493    7.04    4.50    2.69
  ==========================================================================================
R 211  1   0.15 1300.0  43.1 0.006  0.000 1    73.5
R 211  2   0.15 2300.0  53.0 0.003  0.000 1     2.2
R 211  3   0.15 1800.0  46.7 0.003  0.000 1     5.0
           Type: Nonerodible Channel   Label: MIDDLE CREEK SECTION
  211 Structure                              394.7
  ------------------------------------------------------------------------------------------
  211 Total IN/OUT                           394.7    9095    6.14    4.05    2.42
  ==========================================================================================
  111 to 211 Routing                0.161
  ==========================================================================================
R 311  1   0.15 1700.0  47.0 0.006  0.000 1    36.6 (Base Conc.        3 mg/l)
R 311  2   0.15 1400.0  62.8 0.003  0.000 1     2.5
R 311  3   0.15   70.0  48.6 0.360  0.000 1     0.4
R 311  4   0.15  140.0  14.3 0.360  0.002 1     1.0
R 311  5   0.15  180.0   7.2 0.360  0.013 1     0.5
R 311  6   0.15  370.0   1.1 0.360  0.031 1     0.2
R 311  7   0.15  100.0  43.0 0.360  0.130 1     2.2
R 311  8   0.15  485.0   1.6 0.360  0.132 1     0.4
           Type: Nonerodible Channel   Label: LOWER CREEK SECTION
  311 Structure                              438.4
  ------------------------------------------------------------------------------------------
  311 Total IN/OUT                           438.4    7543    5.12    2.95    1.92
  ==========================================================================================
  211 to 311 Routing                0.059
  ==========================================================================================
           Type: Nonerodible Channel   Label: LOWER CREEK SECTION
  411 Structure                              438.4
  ------------------------------------------------------------------------------------------
  411 Total IN/OUT                           438.4    7543    5.12    2.95    1.92
  ==========================================================================================
  311 to 411 Routing                0.001
  ==========================================================================================
```

INCORPORATED
EFFECTIVE:
JUL 3 0 1997
UTAH DIVISION OIL, GAS AND MINING

Civil Software Design -- SEDCAD+ Version 3.1
Copyright (C) 1987-1992. Pamela J. Schwab. All rights reserved.

Company Name: STEFFEN, ROBERTSON, KIRSTEN
Filename: C:\SEDCAD3\GENWAL3A User: PETE KOWALEWSKI
Date: 06-04-1997 Time: 08:18:20
CRANDALL CANYON - SEDIMENT GENERATION 10-YR 24-HR STORM- W/ SILT FENCE
Storm: 2.50 inches, 10 year-24 hour, SCS Type II
Hydrograph Convolution Interval: 0.1 hr

DETAILED SUBWATERSHED INPUT/OUTPUT TABLE

J	B	S	SWS	Seg. #	Land Flow Condition	Distance (ft)	Slope (%)	Velocity (fps)	Segment Time (hr)	Time Conc. (hr)	Muskingum K (hr)	Muskingum X
1	1	1	1	-a	1	10500.00	22.90	1.21	2.41	2.409		
1	1	1	2	-a	1	10000.00	22.60	1.20	2.31	2.309		
2	1	1	1	-a	1	7000.00	24.60	1.25	1.55	1.549		
2	1	1	2	-a	1	6000.00	26.90	1.31	1.27	1.270		
2	1	1	3	-a	1	7000.00	29.70	1.38	1.41	1.410		
3	1	1	1	-a	1	4750.00	40.40	1.61	0.82	0.820		
3	1	1	2	-a	1	6750.00	32.70	1.45	1.30	1.296		
3	1	1	3	-a	5	70.00	48.60	6.97	0.00	0.002		
3	1	1	4	-a	5	140.00	14.30	3.78	0.01	0.010		
3	1	1	4	-1	5	77.83	48.60	6.97	0.00		0.002	0.401
3	1	1	5	-a	5	180.00	7.20	2.68	0.02	0.018		
3	1	1	5	-1	5	141.42	14.30	3.78	0.01			
				-2	5	77.83	48.60	6.97	0.00		0.013	0.370
3	1	1	6	-a	5	370.00	1.08	1.04	0.10	0.098		
3	1	1	6	-1	5	180.47	7.20	2.68	0.02			
				-2	5	141.42	14.30	3.78	0.01			
				-3	5	77.83	48.60	6.97	0.00		0.031	0.346
3	1	1	7	-a	5	100.00	43.00	6.56	0.00	0.004		
3	1	1	7	-1	5	370.02	1.08	1.04	0.10			
				-2	5	180.47	7.20	2.68	0.02			
				-3	5	141.42	14.30	3.78	0.01			
				-4	5	77.83	48.60	6.97	0.00		0.130	0.296
3	1	1	8	-a	5	485.00	1.65	1.28	0.10	0.104		
3	1	1	8	-1	5	108.85	43.00	6.56	0.00			
				-2	5	370.02	1.08	1.04	0.10			
				-3	5	180.47	7.20	2.68	0.02			
				-4	5	141.42	14.30	3.78	0.01		0.132	0.302

Civil Software Design -- SEDCAD+ Version 3.1
Copyright (C) 1987-1992. Pamela J. Schwab. All rights reserved.

Company Name: STEFFEN, ROBERTSON, KIRSTEN
Filename: C:\SEDCAD3\GENWAL3A User: PETE KOWALEWSKI
Date: 06-04-1997 Time: 08:18:20
CRANDALL CANYON - SEDIMENT GENERATION 10-YR 24-HR STORM- W/ SILT FENCE
Storm: 2.50 inches, 10 year-24 hour, SCS Type II
Hydrograph Convolution Interval: 0.1 hr

INCORPORATED
EFFECTIVE:
JUL 30 1997
97B
UTAH DIVISION OIL, GAS AND MINING

==========
NON-POND STRUCTURE INPUT/OUTPUT TABLE
==========

J1, B1, S1
UPPER CREEK SECTION

Drainage Area from J1, B1, S1, SWS(s)1-2: 1975.5 acres
Total Contributing Drainage Area: 1975.5 acres

MATERIAL: NATURAL CHANNEL BED
Trapezoidal Nonerodible Channel

Design Discharge (cfs)	Bottom Width (ft)	ZLeft	ZRight	Slope (%)	Manning's n
54.38	25.0	2.0:1	2.0:1	7.8	0.040

	Depth (ft)	Velocity (fps)	Top Width (ft)	Hydraulic Radius	Froude Number
	0.39	5.41	26.6	0.376	1.55
w/ Freeboard:	0.39		26.6		

	Runoff Volume (ac-ft)	Peak Discharge (cfs)	Sediment (tons)	Peak Sediment Concentration (mg/l)	Peak Settleable Concentration (ml/l)	24VW (ml/l)	24AA (ml/l)
IN/OUT	34.26	54.38	314.0	10493	7.04	4.50	2.69

****

J2, B1, S1
MIDDLE CREEK SECTION

Drainage Area from J2, B1, S1, SWS(s)1-3: 828.3 acres
Total Contributing Drainage Area: 2803.8 acres

MATERIAL: NATURAL CHANNEL BED
Trapezoidal Nonerodible Channel

Design Discharge (cfs)	Bottom Width (ft)	ZLeft	ZRight	Slope (%)	Manning's n
78.68	25.0	2.0:1	2.0:1	12.4	0.040

	Depth (ft)	Velocity (fps)	Top Width (ft)	Hydraulic Radius	Froude Number
	0.42	7.20	26.7	0.406	1.98
w/ Freeboard:	0.42		26.7		

	Runoff Volume (ac-ft)	Peak Discharge (cfs)	Sediment (tons)	Peak Sediment Concentration (mg/l)	Peak Settleable Concentration (ml/l)	24VW (ml/l)	24AA (ml/l)
IN/OUT	48.16	78.68	394.7	9095	6.14	4.05	2.42

****

J3, B1, S1
LOWER CREEK SECTION

Drainage Area from J3, B1, S1, SWS(s)1-8: 299.0 acres
Total Contributing Drainage Area: 3102.8 acres

MATERIAL: NATURAL CHANNEL BED
Trapezoidal Nonerodible Channel

Design Discharge (cfs)	Bottom Width (ft)	ZLeft	ZRight	Slope (%)	Manning's n
96.97	25.0	2.0:1	2.0:1	12.4	0.040

	Depth (ft)	Velocity (fps)	Top Width (ft)	Hydraulic Radius	Froude Number
	0.48	7.80	26.9	0.458	2.02
w/ Freeboard:	0.48		26.9		

	Runoff Volume (ac-ft)	Peak Discharge (cfs)	Sediment (tons)	Peak Sediment Concentration (mg/l)	Peak Settleable Concentration (ml/l)	24VW (ml/l)	24AA (ml/l)
IN/OUT	53.30	96.97	438.4	7543	5.12	2.95	1.92

****

J4, B1, S1
LOWER CREEK SECTION

Drainage Area from J4, B1, S1 299.0 acres
Total Contributing Drainage Area: 3102.8 acres

MATERIAL: NATURAL CHANNEL BED
Trapezoidal Nonerodible Channel

Design Discharge (cfs)	Bottom Width (ft)	ZLeft	ZRight	Slope (%)	Manning's n
96.97	25.0	2.0:1	2.0:1	12.4	0.040

	Depth (ft)	Velocity (fps)	Top Width (ft)	Hydraulic Radius	Froude Number
	0.48	7.80	26.9	0.458	2.02
w/ Freeboard:	0.48		26.9		

	Runoff Volume (ac-ft)	Peak Discharge (cfs)	Sediment (tons)	Peak Sediment Concentration (mg/l)	Peak Settleable Concentration (ml/l)	24VW (ml/l)	24AA (ml/l)
IN/OUT	53.30	96.97	438.4	7543	5.12	2.95	1.92

****

INCORPORATED
EFFECTIVE:
JUL 30 1997
UTAH DIVISION OIL, GAS AND MINING