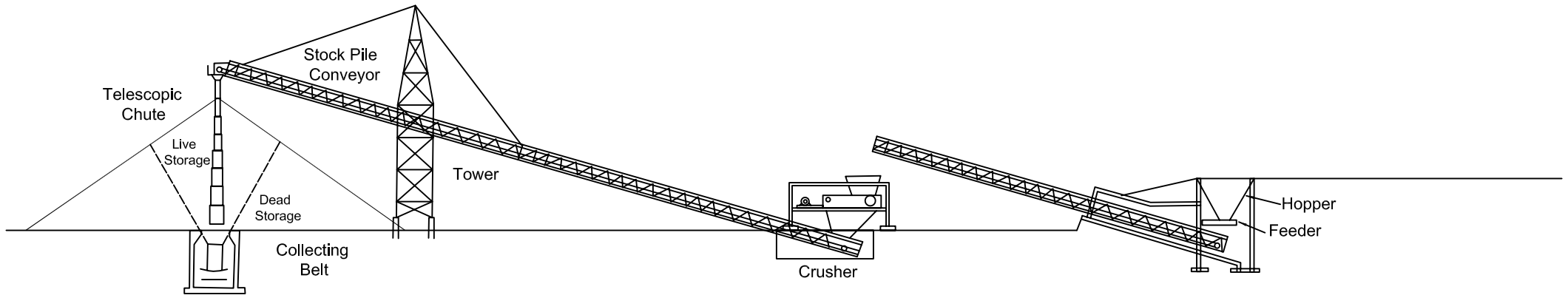

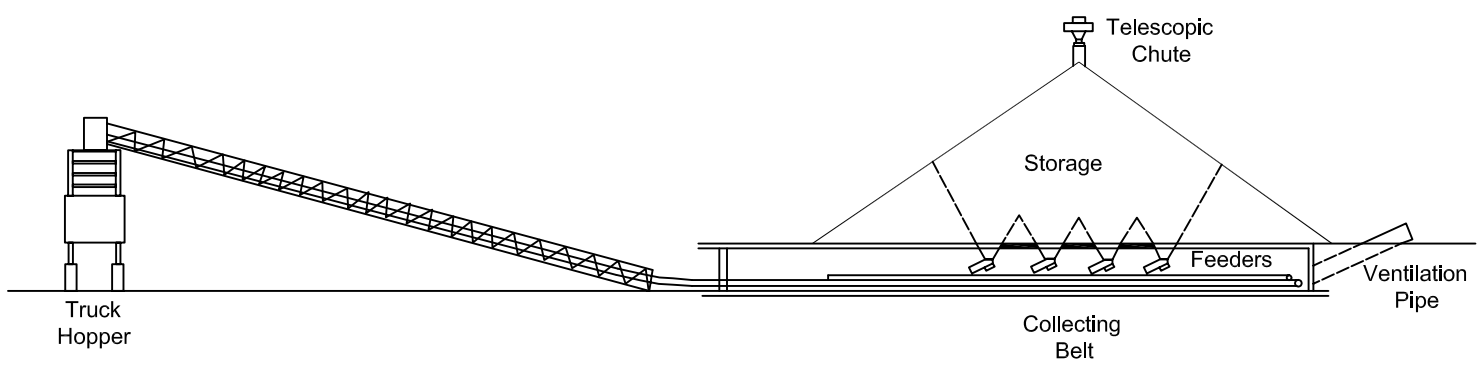

FIGURE 1

COAL HANDLING FACILITY

COAL HOLLOW PROJECT

Kane County, Utah

May 2006
Not to Scale