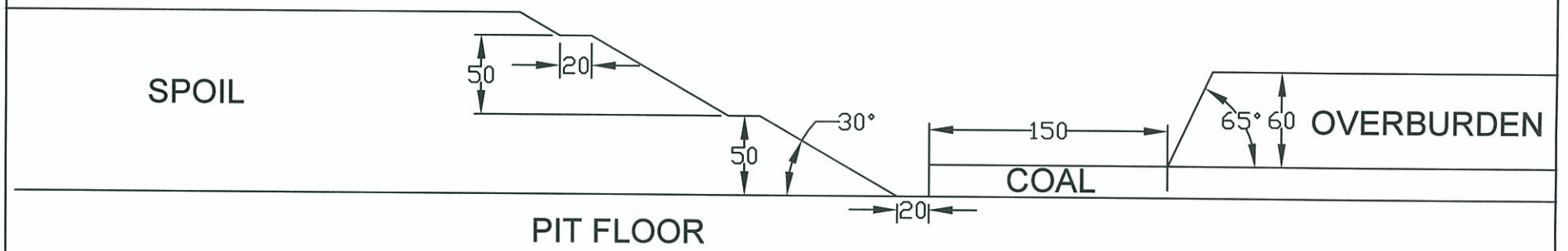

Registered Professional Engineer
No. 144842
JOHN S. HUEFNER
6-15-06
State of Utah

Alton Coal Development
Coal Hollow Project

DRAWING 5-3

TYPICAL CROSS SECTION - SHALLOW COVER

COAL HOLLOW PROJECT

Kane County, Utah

March 2006

1" = 100'

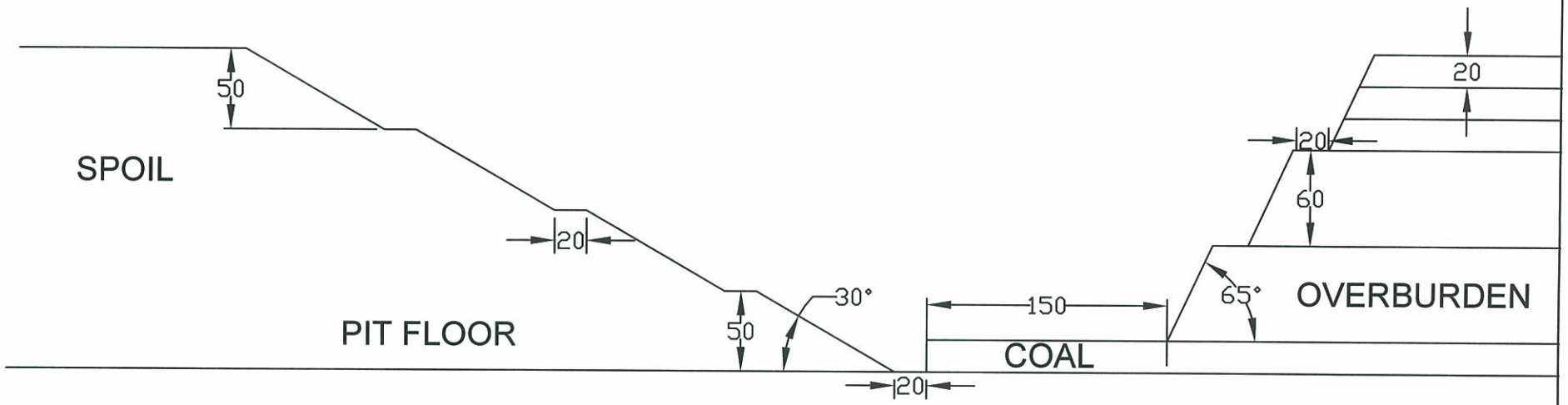

Registered Professional Engineer
No. 144842
JOHN S. HUEFNER
6-15-06
State of Utah

Alton Coal Development
Coal Hollow Project

DRAWING 5-4

TYPICAL CROSS SECTION - DEEP COVER

COAL HOLLOW PROJECT

Kane County, Utah

March 2006

1" = 100'