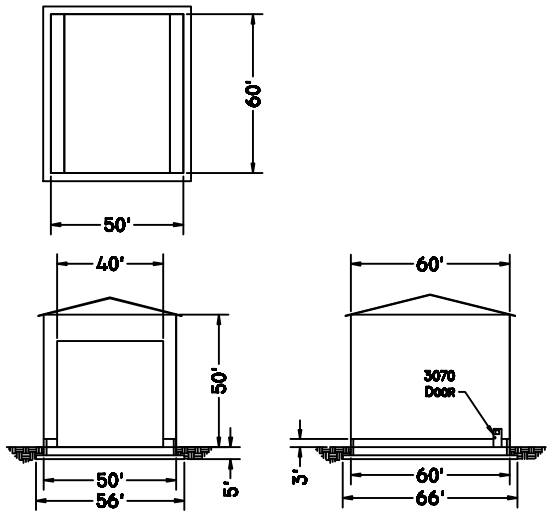

WASH BAY (50' X 60' X 50' HIGH)

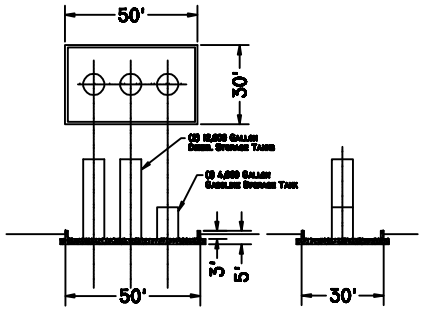

28,000 GALLON FUEL STORAGE
50' LONG X 30' WIDE X 3' DEEP

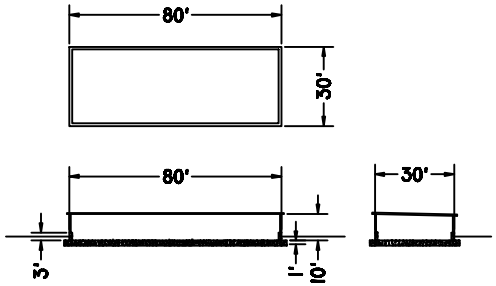

50,000 GALLON OIL STORAGE
80' LONG X 30' WIDE X 3' DEEP

NOTE: NOT DESIGNED FOR CONSTRUCTION, FOR BONDING PURPOSES ONLY.

DRAWN BY: L. JOHNSON	CHECKED BY: CRM/APC	**WASH BAY, OIL & FUEL STORAGE ELEVATION VIEW**	Registered Professional Engineer 275875-2202 CHRIS R. McCOURT State of Utah	Alton Coal Development Coal Hollow Project
DRAWING: 5-8	DATE: 04/20/07	**COAL HOLLOW PROJECT ALTON, UTAH**		615 North, 400 East P.O. Box 1230 Huntington, Utah 84528 Phone (435)687-5310 Fax (435)687-5311
	SCALE: NTS			
JOB NUMBER: 1400	SHEET	**DRAWING: 5-8**		