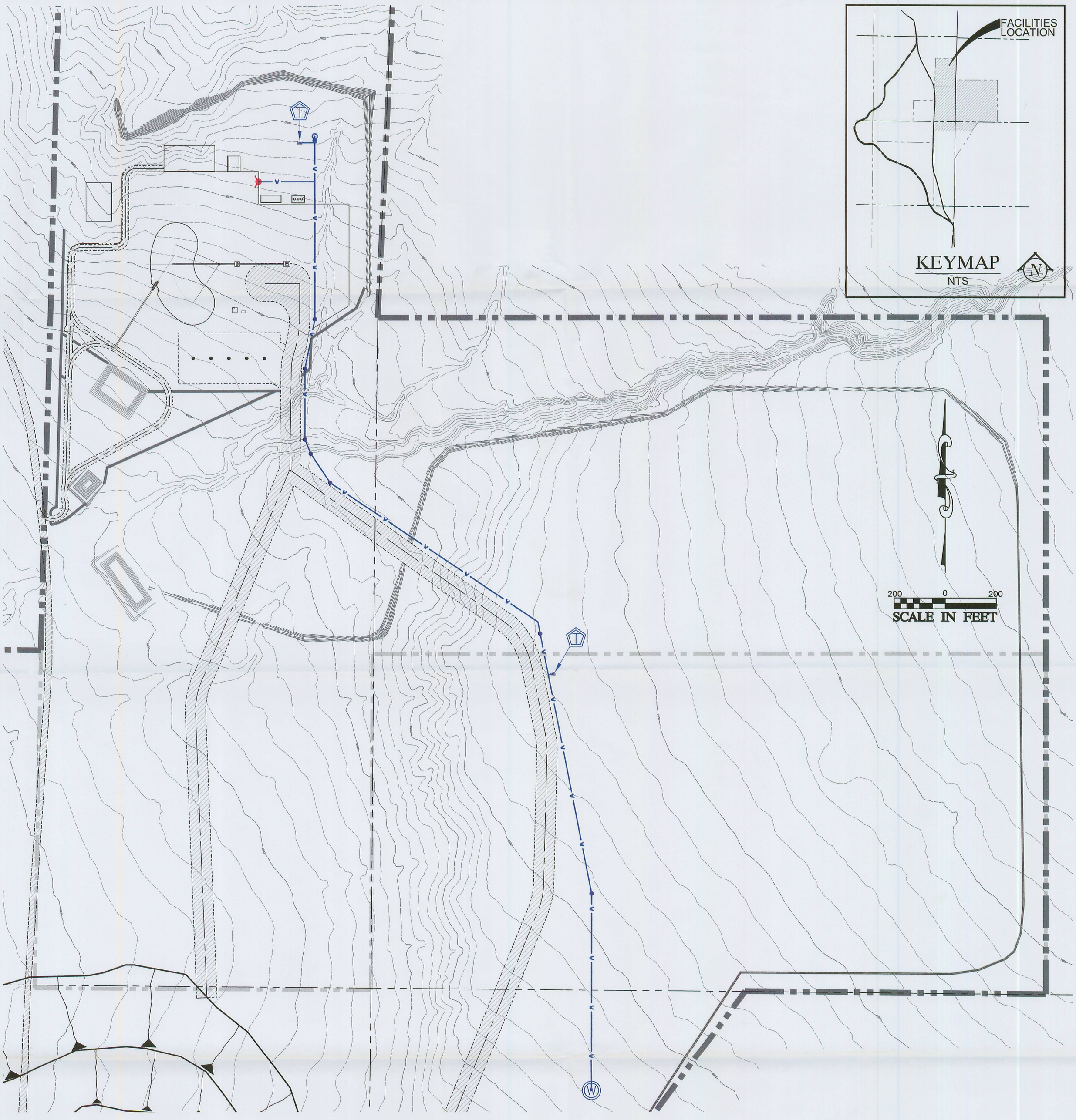

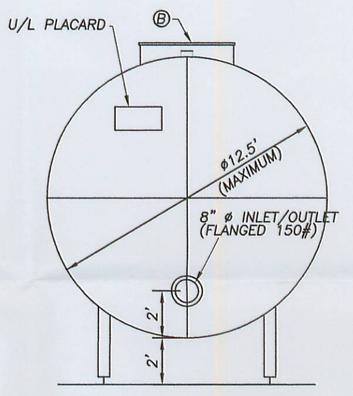

END VIEW
NOT TO SCALE

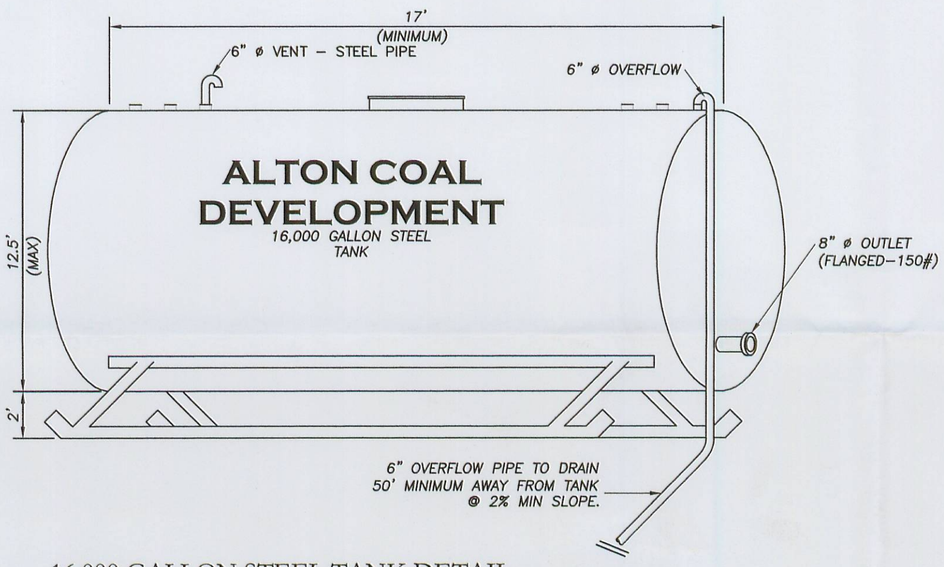

16,000 GALLON STEEL TANK DETAIL
NOT TO SCALE

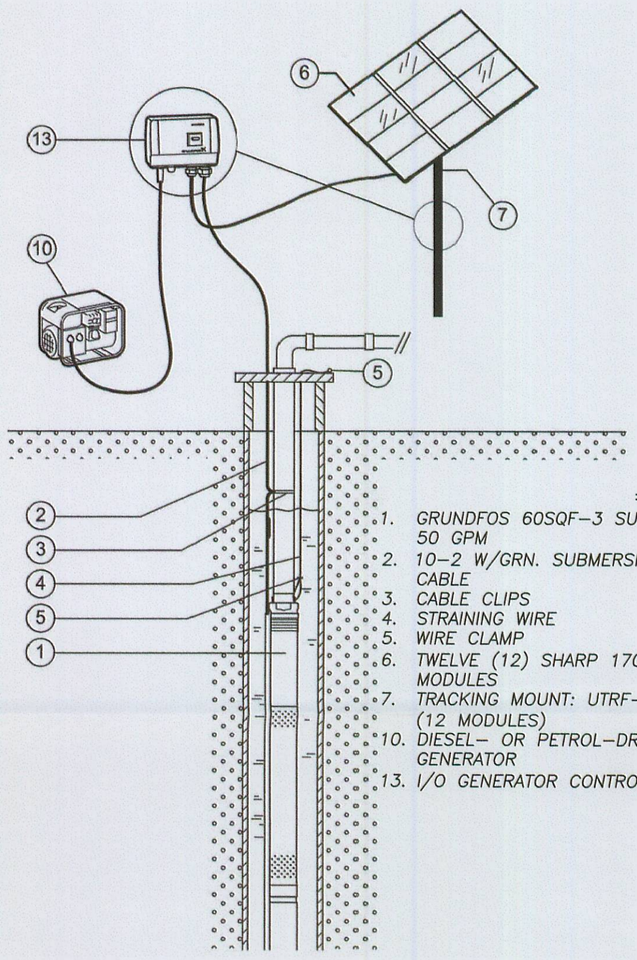

GROUND WATER PUMP WITH SOLAR ARRAY DETAIL

LEGEND:

- PROJECT AREA
- PRIVATE COAL OWNERSHIP
- SECTION LINE
- EXIST. CENTERLINE
- EXIST. RIGHT–OF–WAY
- EXIST. EDGE OF DIRT
- PROPOSED 6" PVC C–900 WATER LINE
- 4050 4049 EXIST. CONTOURS
- GROUNDWATER PUMP SYSTEM WITH SOLAR ARRAY (SEE DETAIL ABOVE). 5 GPM WITH 60 FT OF HEAD.
- 12.5'(DIA) X 17.5'(L) 16,000 GAL WATER TANK MOUNTED ON SKIDS (SEE DETAIL ABOVE).
- FIELD HYDRANT

DRAWN BY: G. GROSSMAN	CHECKED BY: CRM/WES
DRAWING: 5–8C	DATE: 11/10/08
	SCALE: 1" = 200'
JOB NUMBER: 1400	SHEET

REVISIONS	
DATE:	BY:

FACILITIES & STRUCTURES

WATER PLAN

COAL HOLLOW PROJECT
ALTON, UTAH

DRAWING: 5-8C

File in:
☐ Confidential
☒ Shelf
☐ Expandable
Refer to Record No. 0144 Date 12/18/2008
In C0450005, 2006, Incoming
For additional information Coal Hollow Coal

Registered Professional Engineer
154279-2202
WILLIAM E. SPITZENBERG
12/08/08
State of Utah

Alton Coal Development
Coal Hollow Project
463 North 100 West, Suite 1
Cedar City, Utah 84720
Phone (435) 867-5331
Fax (435) 867-1192

RECEIVED
DEC 22 2008
DIV. OF OIL, GAS & MINI

C:\documents and settings\glenn\my documents\8071011 Alton Coal Development\dwg\5-8C.dwg, 12/5/2008 2:12:44 PM, glenn, HP DesignJet 1050C.pc3