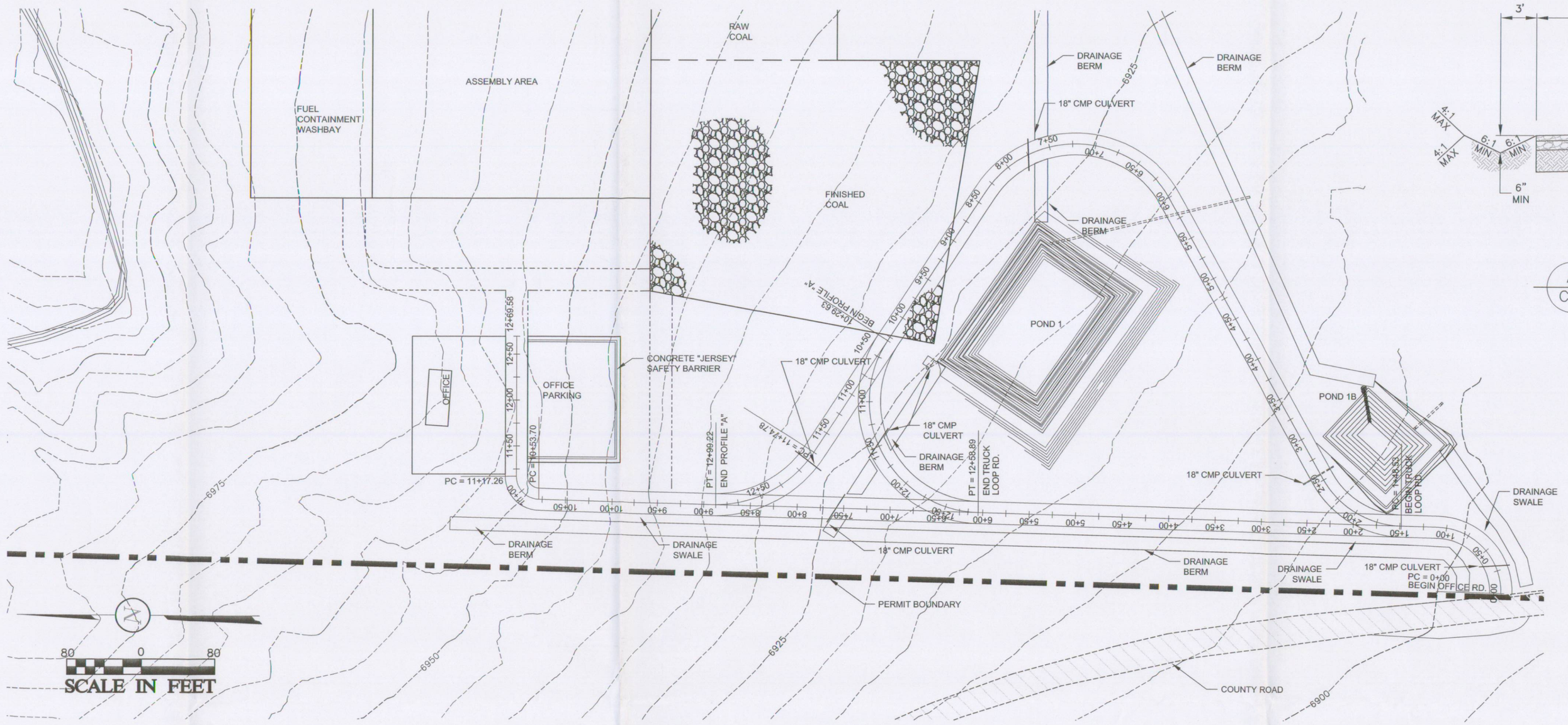

B C7.1 FACILITIES PRIMARY ROADS – PLAN
SCALE: 1" = 80'

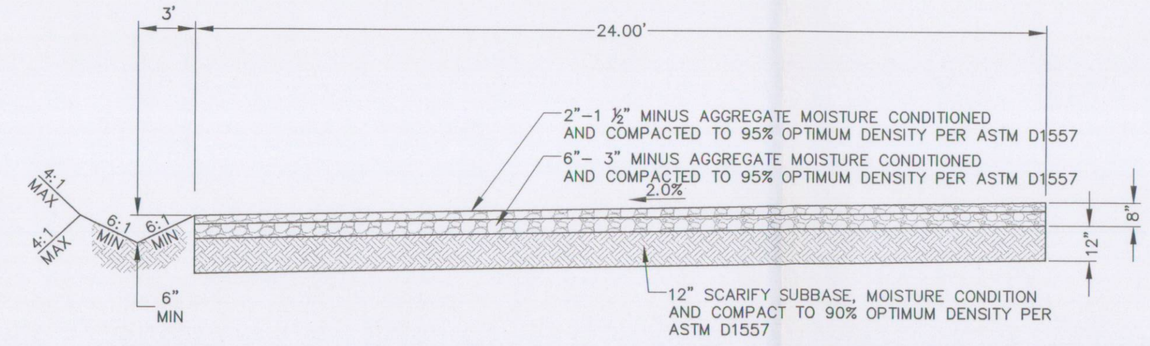

A C7.1 24' WIDE ROAD SECTION (TYPICAL)
NOT TO SCALE

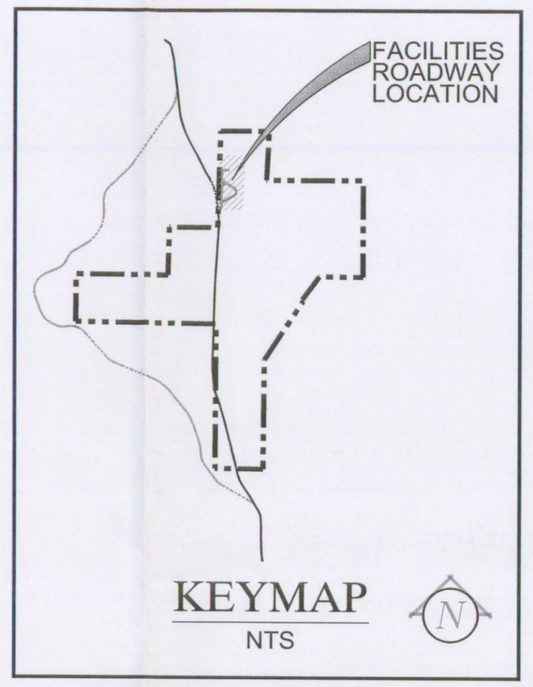

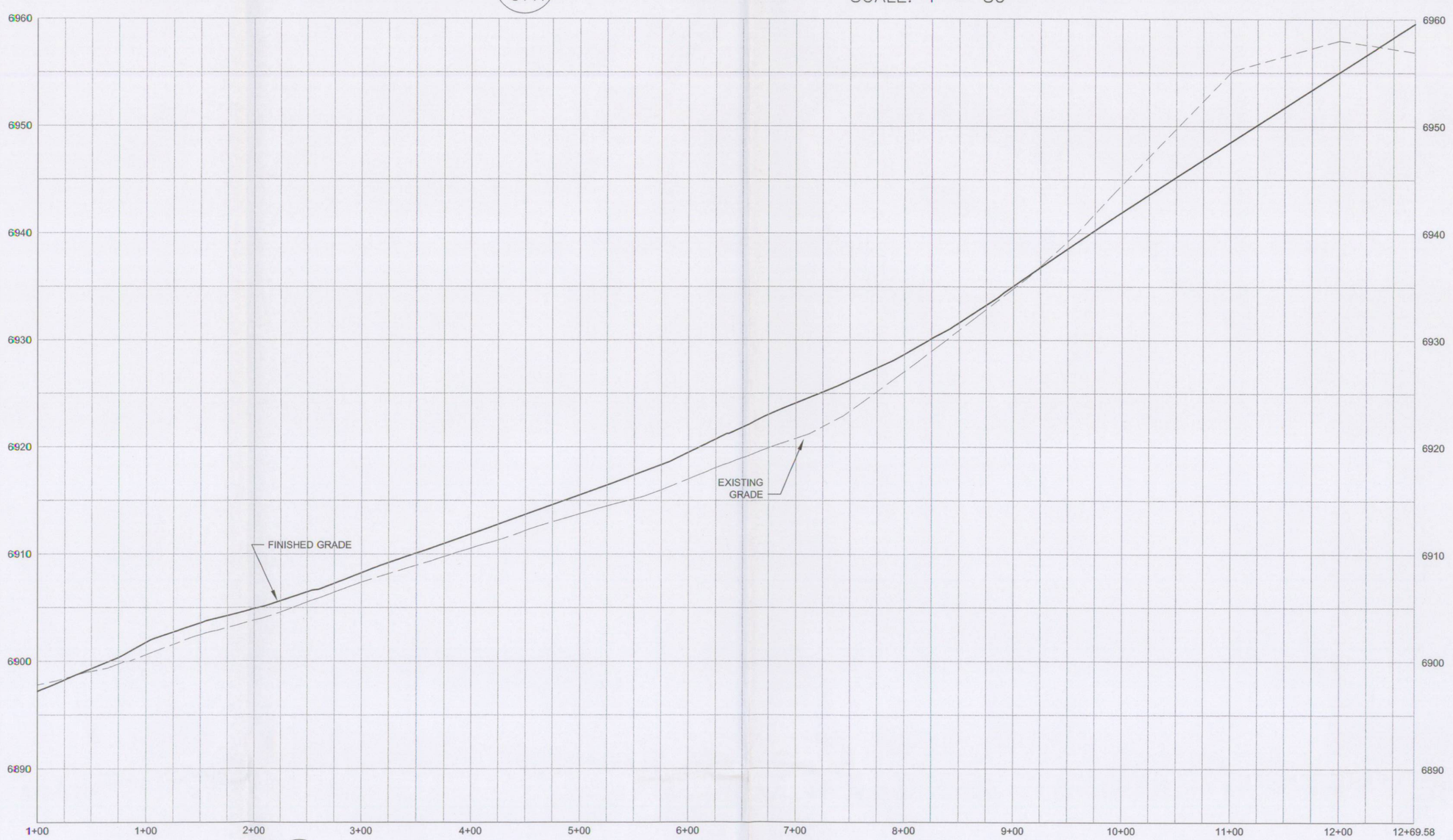

C C7.1 FACILITIES PRIMARY ROAD – PROFILE "OFFICE ROAD"
HORIZ: 1" = 80' VERT: 1" = 8'

MARK OF BEGINNING AND END OF ALIGNMENT

PROFILE/ALIGNMENT	ALIGNMENT LENGTH
A	23+41.84
B	25+59.19
C	12+54.57

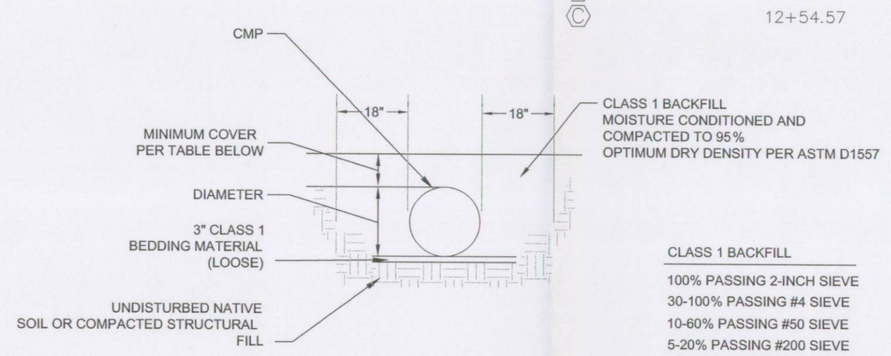

CMP PIPE BEDDING DETAIL
(NTS)

CLASS 1 BACKFILL

100% PASSING 2-INCH SIEVE
30-100% PASSING #4 SIEVE
10-60% PASSING #50 SIEVE
5-20% PASSING #200 SIEVE
LIQUID LIMIT < 35
PLASTICITY INDEX < 6

MINIMUM COVER FOR CMP PIPES IN HAUL ROADS	
PIPE DIAMETER (INCHES)	MINIMUM COVER (INCHES)
18	36
24	36
36	36
96	48
MINIMUM COVER FOR CMP PIPES IN FACILITIES ROADS	
PIPE DIAMETER (INCHES)	MINIMUM COVER (INCHES)
18	24

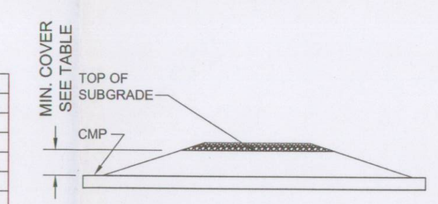

RECORD DRAWING

CONSULTANT:
LESLIE & ASSOCIATES
444 South Main Street
Cedar City, Utah 84720
Phone (435)586-9474
FAX (435)586-9399
CIVIL ENGINEERS
LAND SURVEYORS

L:\Jobs\Utah\594_ALTON_COAL_KANE_MINING\01-COAL_HOLLOW_PROJECT\5-22A - Standard\SHEETS\C7.1.dwg April 20, 2011 3:08pm By:Owner

LEGEND:

- PERMIT BOUNDARY
- PRIVATE COAL OWNERSHIP
- COAL RECOVERY LINE
- SECTION LINE
- FOUND SECTION CORNER
- FOUND PROPERTY CORNER
- DIVERSION DITCHES
- PROPOSED SEDIMENT IMPOUNDS
- BERM
- YEAR 1 DISTURBANCE
- YEAR 2 DISTURBANCE
- YEAR 3 DISTURBANCE
- PROPOSED POWERLINE CENTERLINE

Alton Coal Development
Coal Hollow Project
463 North 100 West, Suite 1
Cedar City, Utah 84720
Phone (435) 867-5331
Fax (435) 867-1192

LICENSED PROFESSIONAL ENGINEER No. 348930 KERRY ROBERT BENSON STATE OF UTAH
4-19-2011

PRIMARY ROADWAYS FACILITIES ROADWAY PLAN & PROFILE (BID SCHEDULE VI)

COAL HOLLOW PROJECT
ALTON, UTAH

DRAWING: C7.1

REVISIONS

DATE:	BY:
4/19/11	KRB

DRAWN BY: KRB	CHECKED BY: JPL
DRAWING:	DATE: 11/01/2010
	SCALE: AS NOTED
	JOB NUMBER: 594-01-01

RECEIVED
JUL 05 2011
DIV. OF OIL, GAS & MINING