Alton Coal Development, LLC
463 North 100 West, Suite 1
Cedar City, Utah 84720
Phone (435) 867-5311 Fax (435) 867-1192

February 27, 2020

Steve Christensen
Acting Coal Program Manager
Oil, Gas & Mining
1594 West North Temple, Suite 1210
Salt Lake City, UT 84114-5801

Re: **Resubmittal for Coal Hollow Mine Facility Update, Alton Coal Development, LLC, Coal Hollow Mine, Kane County, Utah, C/025/0005, Task ID#6061**

Dear Mr. Christensen:

Alton Coal Development, LLC (ACD) is resubmitting an amendment that relocated the bathhouse and an office located at the underground facilities at Pit 10. The attached amendment to the MRP updates the new location of these buildings.

This resubmittal incorporates or responds to the deficiencies identified in Task ID #6061. A list of deficiencies and how they were addressed are included in this cover letter.

Changes to the MRP associated with this amendment have been uploaded to the DOGM's server for review. PDF versions of the drawings are not certified. Upon approval, 2 (two) clean hard copies of the text and certified drawings for insertion into the MRP will be submitted. Please do not hesitate to contact me if you have any questions 435-691-1551.

Very truly yours,

B. Kirk Nicholes
Environmental Specialist
Alton Coal Development

1. References to Pit 10 have mostly been replaced with "open pit containing the underground portals." However, on page 5-82 the reference to Pit 10 which remains should be replaced with Pit F8 for clarity. Similarly on page 5-89, the redline statement should read, "While a majority of Pit F8 containing the underground portals will remain open until completion of underground mining, all other pits will be backfilled and reclaimed..."

   Statements on pages 5-82 and 5-89 have been amended as requested.

2. A statement that the borrow area backfill will be "finally rehandled as backfill to Pits 9-C and 10" in the first paragraph on page 5-99 should be removed.

   The statement in the first paragraph on page 5-99 has been modified as requested.

3. References to the buried pipe carrying water from Pit 10 to Pond 3 have been removed from the MRP and from Plate 5-8C. However, the buried pipe still remains and should therefore still be shown on Dwg 5-8C. In addition, the existence of the pipe and its management during reclamation should be stated. i.e. whether portions of the pipe were removed or severed.

   The pipeline in question has been decommissioned and will not be placed back into operation and is therefore no longer a part of the Water Plan depicted on Drawing 5-8C. However, a statement has been added to section 528.332 detailing that the buried portion of the line will remain in place following reclamation.

4. Section 532.200 should reference a map that clearly shows the boundary of the 250,000 CY area to be used for excess spoil storage and describe substitute topsoil handling prior to replacement of excess spoil.

   The statement in Section 537.200 regarding placement of underground spoils on the long-term excess spoil structure has been removed.

5. The redline statement "the Pit containing the underground portals" should be removed from page 5-98, where it would be more appropriate to state that Pit 10 was filled with overburden removed from Pits 10B, 10C and F1.

   The first instance of the referenced statement on page 5-98 has been removed as requested, with additional clarification added to the second paragraph on page 5-99 to show that Pits 10-A and 10-C will be backfilled with material from Pits 1-B and F-1.

6. The amendment should revise the Pit 10 Borrow Area narrative of Chapter 2.

   References to Pit 10 as the location of the underground portals have been appropriately changed. The references to the Pit 10 Borrow Area and the report evaluating this area are still valid references as the plan will still utilize material from this area for reclamation of the pit containing the underground portals.

7. A reference to the stabilization of the Pit 10 slopes has been removed from page 5-78 of section 534. Please evaluate whether this impacts the accounting of "Other Sources of Topsoil" on Dwg 2-2.

The reference to the use of material from the Pit 10 slopes has been removed. This material, although analyzed as a potential source of Subsoil, had a high pH and was included in the soil balance calculations.

APPLICATION FOR COAL PERMIT PROCESSING

3

Permit Change ☒ New Permit ☐ Renewal ☐ Exploration ☐ Bond Release ☐ Transfer ☐

Permittee: Alton Coal Development, LLC
Mine: Coal Hollow Mine **Permit Number:** C/025/0005
Title: Facility Update

Description, Include reason for application and timing required to implement:
Relocation of Bath House and Office building

Instructions: If you answer yes to any of the first eight questions, this application may require Public Notice publication.

☐ Yes ☒ No 1. Change in the size of the Permit Area? Acres: _____ Disturbed Area: _____ ☐ increase ☐ decrease.
☐ Yes ☒ No 2. Is the application submitted as a result of a Division Order? DO# _____
☐ Yes ☒ No 3. Does the application include operations outside a previously identified Cumulative Hydrologic Impact Area?
☐ Yes ☒ No 4. Does the application include operations in hydrologic basins other than as currently approved?
☐ Yes ☒ No 5. Does the application result from cancellation, reduction or increase of insurance or reclamation bond?
☐ Yes ☒ No 6. Does the application require or include public notice publication?
☐ Yes ☒ No 7. Does the application require or include ownership, control, right-of-entry, or compliance information?
☐ Yes ☒ No 8. Is proposed activity within 100 feet of a public road or cemetery or 300 feet of an occupied dwelling?
☐ Yes ☒ No 9. Is the application submitted as a result of a Violation? NOV # _____
☐ Yes ☒ No 10. Is the application submitted as a result of other laws or regulations or policies?
Explain: _____
☐ Yes ☒ No 11. Does the application affect the surface landowner or change the post mining land use?
☐ Yes ☒ No 12. Does the application require or include underground design or mine sequence and timing? (Modification of R2P2)
☐ Yes ☒ No 13. Does the application require or include collection and reporting of any baseline information?
☐ Yes ☒ No 14. Could the application have any effect on wildlife or vegetation outside the current disturbed area?
☐ Yes ☒ No 15. Does the application require or include soil removal, storage or placement?
☐ Yes ☒ No 16. Does the application require or include vegetation monitoring, removal or revegetation activities?
☐ Yes ☒ No 17. Does the application require or include construction, modification, or removal of surface facilities?
☐ Yes ☒ No 18. Does the application require or include water monitoring, sediment or drainage control measures?
☐ Yes ☒ No 19. Does the application require or include certified designs, maps or calculation?
☐ Yes ☒ No 20. Does the application require or include subsidence control or monitoring?
☐ Yes ☒ No 21. Have reclamation costs for bonding been provided?
☐ Yes ☒ No 22. Does the application involve a perennial stream, a stream buffer zone or discharges to a stream?
☐ Yes ☒ No 23. Does the application affect permits issued by other agencies or permits issued to other entities?
☐ Yes ☒ No 24. Does the application include confidential information and is it clearly marked and separated in the plan?

Please attach three (3) review copies of the application. If the mine is on or adjacent to Forest Service land please submit four (4) copies, thank you. (These numbers include a copy for the Price Field Office)

I hereby certify that I am a responsible official of the applicant and that the information contained in this application is true and correct to the best of my information and belief in all respects with the laws of Utah in reference to commitments, undertakings, and obligations, herein.

B. Kirk Nicholes	Environmental Specialist	01/30/2020	B. Kirk Nicholes
Print Name	Position	Date	Signature (Right-click above choose certify then have notary sign below)

Subscribed and sworn to before me this 30 day of January, 2020

Notary Public: Marty G. Nicholes, state of Utah.

My commission Expires: 9-11-2021 County Iron

Commission Number: 696219 } ss:

Address: 1670 E Millstone Cir

City: Enoch State: UT Zip: 84721

MARTY G. NICHOLES
Notary Public, State of Utah
My Commission Expires
September 11, 2021
Commission # 696219

For Office Use Only:	Assigned Tracking Number:	Received by Oil, Gas & Mining

Form DOGM- C1 (Revised December 10, 2007)

APPLICATION FOR COAL PERMIT PROCESSING
Detailed Schedule Of Changes to the Mining And Reclamation Plan

Permittee: Alton Coal Development, LLC
Mine: Coal Hollow Mine **Permit Number:** C/025/0005
Title: Facility Update

Provide a detailed listing of all changes to the Mining and Reclamation Plan, which is required as a result of this proposed permit application. Individually list all maps and drawings that are added, replaced, or removed from the plan. Include changes to the table of contents, section of the plan, or other information as needed to specifically locate, identify and revise the existing Mining and Reclamation Plan. Include page, section and drawing number as part of the description.

			DESCRIPTION OF MAP, TEXT, OR MATERIAL TO BE CHANGED
☐ Add	☒ Replace	☐ Remove	Chapter 5, TOC
☐ Add	☒ Replace	☐ Remove	Chapter 5, Text
☐ Add	☐ Replace	☒ Remove	Chapter 5, Appendix 5-13
☐ Add	☒ Replace	☐ Remove	Chapter 5, Drawing 5-3
☐ Add	☒ Replace	☐ Remove	Chapter 5, Drawing 5-3A
☐ Add	☐ Replace	☒ Remove	Chapter 5, Drawing 5-3B
☐ Add	☐ Replace	☒ Remove	Chapter 5, Drawing 5-3C
☐ Add	☐ Replace	☒ Remove	Chapter 5, Drawing 5-3D
☐ Add	☒ Replace	☐ Remove	Chapter 5, Drawing 5-8C
☐ Add	☐ Replace	☒ Remove	Chapter 5, Drawing 5-22I
☐ Add	☒ Replace	☐ Remove	Chapter 2, Text
☐ Add	☐ Replace	☐ Remove	
☐ Add	☐ Replace	☐ Remove	
☐ Add	☐ Replace	☐ Remove	
☐ Add	☐ Replace	☐ Remove	
☐ Add	☐ Replace	☐ Remove	
☐ Add	☐ Replace	☐ Remove	
☐ Add	☐ Replace	☐ Remove	
☐ Add	☐ Replace	☐ Remove	
☐ Add	☐ Replace	☐ Remove	
☐ Add	☐ Replace	☐ Remove	
☐ Add	☐ Replace	☐ Remove	
☐ Add	☐ Replace	☐ Remove	
☐ Add	☐ Replace	☐ Remove	
☐ Add	☐ Replace	☐ Remove	
☐ Add	☐ Replace	☐ Remove	
☐ Add	☐ Replace	☐ Remove	

Any other specific or special instruction required for insertion of this proposal into the Mining and Reclamation Plan.	Received by Oil, Gas & Mining

R645-301-200. SOILS

210. INTRODUCTION

211. Soil Removal

In this section, the Alton Coal Project will present a description of the pre-mining soil resources as specified under R645-301-221. Topsoil and subsoil to be saved under R645-301-232 will be separately removed and segregated from other materials.

212. Soil Redistribution

After removal, topsoil will be immediately redistributed in accordance with R645-301-242 and stockpiled pending redistribution under R645-301-234. For details refer to Section 5 of Appendix 2-1.

220. ENVIRONMENTAL DESCRIPTION

221. Prime Farmland Investigation

The Natural Resource Conservation Service conducted a prime farmland assessment in October 2006 and determined that "No Prime Farmland or Soils of Statewide Importance were found within the study area (Coal Hollow Mine area), per criteria outlined in the National Survey Handbook Part 622 and Exhibit UT603-1, respectively (C. Meier, 2006)." The assessment stated that the soils "..could classify as Soils of Statewide Importance, if irrigated.."

"An available and reliable source of moisture to sustain crops common to the area is the primary limiting factor that excludes the observed soils from classifying as Prime Farmland or SSI (C. Meier, 2006)."

"In addition to a lack of a reliable source of water, soils did not classify as Prime Farmland due to high pH, high electrical conductivity, excessive erosion potential on steep slopes and slow permeability (C. Meier, 2006)."

On January 28, 2014, the Natural Resource Conservation Service provided a prime farmland assessment for the Dame Lease IBC. It was determined that "About 80 acres of the area of interest meets the definition of "Statewide Important Farmland, if irrigated" . It is in map unit "1103- Sili-Sidshow- Gypsic Haplustepts complex, 2 to 15 percent slopes" .

A copy of the NRCS Prime Farmland Determination for both the 2006 (Coal Hollow Mine) and the 2014 (Dame Lease IBC) is included in Section 1 of Appendix 2-1.

The Natural Resource Conservation Service (NRCS) conducted a Prime Farmland assessment in December 2012 and determined that soil map unit 1111 is considered Prime Farmland, if irrigated." NRCS soil map unit 1111 is Naplene-Termote-Arboles Oxyaquic Ustifluvent complex, 2 to 8 percent slopes. The NRCS determined that there is "...approximately 292 of soil map unit 1111" which is irrigated and "...will be converted." The NRCS Prime Farmland assessment can be seen in Appendix A of Volume 11: Supplemental Report section of the MRP in the report called: *Order 2 Soil*

Survey for the North Private Lease Expansion of the Coal Hollow Mine (November 2014).

The NRCS Prime Farmland assessment is based on a broad Order 2 and Order 3, Soil Survey of Kane County, Utah.

An evaluation of potential Prime Farmland areas within the North Private Lease was conducted using field and lab data collected for the soil survey. The results found a difference between the soils mapped as part of the Kane County Area, Utah Soil Survey and those identified by the more intensive North Private Lease soil survey. The project specific evaluation of potential *Prime Farmland* map units was conducted using field and laboratory analysis data from the North Private Lease area and the criteria set forth in the *Code of Federal Regulations Title 7, Part 657.5 Identification of important farmlands*. The results of this evaluation can be seen in Section 4 of Volume 11: Supplemental Report section of the MRP in the report called: *Order 2 Soil Survey for the North Private Lease Expansion of the Coal Hollow Mine* (November 2014).

The results of this evaluation found that there is approximately 121 acres of Prime Farmland soil map units that are irrigated and approximately 130 acres of Farmland of Statewide Importance within the North Private Lease soil survey area. This total area of 251 acres is equivalent to the sum of all land that is currently under irrigation or has the potential of being irrigated with existing water rights. Handling procedures of Prime Farmland soils found in Area 2 of the NPL can be found in MRP, Chapter 9, Section R302-316 through R302-317.

222. Soil Survey

An order 2 soils survey has been completed in 2007 at the Coal Hollow Project. Appendix 2-1 contains a report that provides the details for this survey. Utilizing existing soils data, the soil map units were extended to include the Dame Lease IBC. Appendix 2-3 contains a report that provides details for this survey. The survey area is on private lands leased by Alton Coal Development (ACD) and adjacent lands. These soil surveys were prepared so that ACD could: 1) identify suitable sources of subsoil and topsoil; 2) determine topsoil and subsoil salvage depths and quantities; and, 3) develop a post mining reclamation plan using salvaged soil materials. These soil surveys cover approximately 716 acres.

An Order 2 soil survey was completed in the North Private Lease area in 2014. This soil survey report can be found in Volume 11: Supplemental Report section of the MRP in the report called: *Order 2 Soil Survey for the North Private Lease Expansion of the Coal Hollow Mine* (November 2014). The survey is on private lands leased by Alton Coal Development (ACD) and adjacent lands. This soil survey was prepared so that ACD could: 1) identify suitable sources of subsoil and topsoil; 2) determine topsoil and subsoil salvage depths and quantities; and, 3) develop a post mining reclamation plan using salvaged soil materials. These soil surveys cover approximately 428 acres.

A soil survey update was completed for approximately 27.9 acres of undisturbed soils in the Pit 10 Borrow Area. This update is described Appendix 2-4 called: *Topsoil and Subsoil Sources and Substitute Sources in the Pit 10 Borrow Area*.

222.100. Soils Map

A map with soil map unit delineations for the South Private Lease (SPL) is shown on Drawing 2-1. Mining and subsequent reclamation has been completed on portions of SPL, thus in 2018, the soil map units have been modified to reflect the redistribution of soils prior to initiation of coal extraction from the federal coal block located within the SPL.

A map with soil map unit delineations for the North Private Lease is shown on Soils Map 2 in Volume 11: Supplemental Report section of the MRP in the report called: *Order 2 Soil Survey for the North Private Lease Expansion of the Coal Hollow Mine* (November 2014).

An updated soil map for the Pit 10 Borrow Area was produced based on the July 26 and 27, 2016 field evaluation and subsequent laboratory analysis. This updated soil map is shown as Figure 2-4.1 in Appendix 2-4 called: *Topsoil and Subsoil Sources and Substitute Sources in the Pit 10 Borrow Area*.

222.200. Soil Identification

Initially, soils in the Coal Hollow project soil survey area were grouped into thirteen soil map units based on taxonomic classification, depth to parent material, and slope. The composition of these initial 13 map units is described in table 2-1. Detailed descriptions of each soil map unit are included in Appendix 2-1. The soil survey map is Drawing 2-1. In 2016, the area planned as a backfill source for ~~Pit 10~~the underground mine (currently planned for Pit F8) was resurveyed. Soil map units A1, A3 and L were added to Drawing 2-1. Detailed descriptions of each soil map unit are included in Appendix 2-4. In 2018, the Lease By Application (LBA) for federal coal within and adjacent to the Coal Hollow Mine (CHM) South Private Lease (SPL) was included in the permit. As prior mining and reclamation has occurred adjacent to the federal coal with in the SPL and some of the soils that have been reclaimed will again be disturbed, it was necessary to alter drawing 2-1 to indicate soils that had been redistributed. Four new soil map units (RS, R1, CS, CS1) have been added to designate the soils that have been redistributed. As these four soils are the product of redistribution, the brief description and depths found on Drawing 2-1 will guide in the recovery effort as portions are salvaged with the continued mining of the federal coal beneath.

Table 2-1. Soil map unit composition for the Coal Hollow project area.

Map Unit	Pct	Soil Type[1]	Taxonomic Classification[2]	Modal Pedon[3]
1		**A Family – Wapiti Family complex, 3 to 8 percent slopes**		
	65	A Family	fine, mixed, superactive, mesic Aridic Calciustept	1
	15	Wapiti Family	fine-loamy, mixed, superactive, mesic Calcidic Argiustoll	32
	10	D	fine, mixed, superactive, mesic Aridic Calciustoll	33
	5	Manzanst Family	fine, mixed, superactive, mesic Aridic Haplustalf	48
	5	N Family	fine, mixed, superactive, frigid Aquic Calciustoll	26
2		**M Family - Calendar Family – D Family complex, 3 to 8 percent slopes**		

Map Unit	Pct	Soil Type[1]	Taxonomic Classification[2]	Modal Pedon[3]
	60	M Family	fine, mixed, superactive, mesic Aridic Calciustepts	3
	25	Calendar Family	fine, mixed, superactive, mesic Aridic Haplustepts	4
	15	D Family	fine, mixed, superactive, mesic Aridic Calciustoll	2
3		**Cibeque Family – Wapiti Familiy complex, 3 to 8 percent slopes**		
	60	Cibeque Family	fine-loamy, mixed, superactive, mesic Aridic Calciustept	6
	30	Wapiti Family	fine-loamy, mixed, superactive, mesic Calcidic Argiustoll	31
	5	A Family	fine, mixed, superactive, mesic Aridic Calciustept	
	5	Calendar Family	fine, mixed, superactive, mesic Aridic Haplustepts	
4		**Jonale Family - Graystone Cobbly Substratum Family - Wapiti Family complex, 3 to 8 percent slopes**		
	50	Jonale Family	fine-loamy, mixed, superactive, mesic Aridic Calciustoll	17
	25	Graystone cobbly substratum Family	coarse-loamy, mixed, superactive, mesic Aridic Calciustoll	39
	15	Wapiti Family	fine-loamy, mixed, superactive, mesic Calcidic Argiustoll	19
	5	D Family	fine, mixed, superactive, mesic Aridic Calciustoll	
	5	A Family	fine, mixed, superactive, mesic Aridic Calciustept	
5		**Calendar Family - M Family – Drifity Family complex, 8 to 25 percent slopes**		
	40	Calendar Family	fine, mixed, superactive, mesic Aridic Haplustepts	24
	30	M Family	fine, mixed, superactive, mesic Aridic Calciustept	25
	20	Drifity Family	loamy, mixed, superactive, calcareous, mesic Aridic Lithic Ustorthent	49
	10	Zigzag	Clayey, mixed, superactive, calcareous, mesic, shallow Aridic Ustorthent	
6		**Graystone - Cookcan – Jonale Family complex, 1 to 5 percent slopes**		
	45	Graystone	coarse-loamy, mixed, superactive, mesic Aridic Calciustoll	15
	20	Cookcan	coarse-loamy, mixed, superactive, frigid Typic Calciaquoll	9B
	20	Jonale Family	fine-loamy, mixed, superactive, mesic Aridic Calciustoll	16
	15	I Family	fine-loamy, mixed, superactive, frigid Aquic Calciustept	14
7		**Happyhollow Family - Alamosa complex, 1 to 5 percent slopes**		
	55	Happyhollow Family	fine, mixed, superactive frigid Aeric Epiaquept	38
	20	Alamosa	fine-loamy, mixed, superactive, frigid Typic Argiaquoll	18A
	10	Jicarilla Family	fine, mixed, superactive, frigid Typic Argiaquoll	43
	10	Tetonview Family	fine-loamy, mixed, superactive frigid Aeric Calciaquoll	40
	3	Brumley	fine-loamy, mixed, superactive, mesic Calcidic Haplustalf	
	2	Jonale Family	fine-loamy, mixed, superactive, mesic Aridic Calciustoll	
8		**Brumley – Graystone - Snilloc complex, 3 to 8 percent slopes**		

Map Unit	Pct	Soil Type[1]	Taxonomic Classification[2]	Modal Pedon[3]
	40	Brumley	fine-loamy, mixed, superactive, mesic Calcidic Haplustalf	22
	30	Graystone Cobbly Substratum Family	coarse-loamy, mixed, superactive, mesic Aridic Calciustoll	20
	20	Snilloc	coarse-loamy, mixed, superactive, mesic Aridic Calciustept	21
	10	Jonale Family	fine-loamy, mixed, superactive, mesic Aridic Calciustoll	
9		**D Family - Deacon complex, 5 to 30 percent slopes**		
	55	D Family	fine, mixed, superactive, mesic Aridic Calciustoll	41
	30	Deacon	fine-loamy, mixed, superactive, mesic Aridic Haplustoll	42
	10	A Family	fine, mixed, superactive, mesic Aridic Calciustept	
	5		Creek bottom	
10		**Zigzag clay, 8 to 25 percent slopes**		
	85	Zigzag	Clayey, mixed, superactive, calcareous, mesic, shallow Aridic Ustorthent	50
	10	Drifity Family	loamy, mixed, superactive, calcareous, mesic Aridic Lithic Ustorthent	
	5	Calendar Family	fine, mixed, superactive, mesic Aridic Haplustepts	
11		**A family clay, 8 to 25 percent slopes**		
	85	A Family	fine, mixed, superactive, mesic Aridic Calciustept	28
	10	Calendar Family	fine, mixed, superactive, mesic Aridic Haplustepts	
	5	Zigzag	Clayey, mixed, superactive, calcareous, mesic, shallow Aridic Ustorthent	
12		**Manzanst Taxadjunct Family clay, 3 to 12 percent slopes**		
	85	Manzanst Family	very fine, mixed, superactive, mesic Aridic Haplustalf	48
	10	Manzanst Family Deep	very fine, mixed, superactive, mesic Aridic Haplustalf	60
	5	A Family	fine, mixed, superactive, mesic Aridic Calciustept	
13		**A Family – Happyhollow Family complex, 1 to 5 percent slopes**		
	80	A Family	fine, mixed, superactive, mesic Aridic Calciustept	59
	15	Happyhollow Family	fine, mixed, superactive frigid Aeric Epiaquept	45
	5	I Family	fine-loamy, mixed, superactive, frigid Aquic Calciustept	52

Soils in the North Private Lease soil survey area were delineated with 12 soil map units and 1 miscellaneous land form. The composition of the soil map units is described in Table 6 in Volume 11: Supplemental Report section of the MRP in the report called: *Order 2 Soil Survey for the North Private Lease Expansion of the Coal Hollow Mine* (November 2014). Detailed descriptions of the soil map units can be seen in Section Three in Volume 11: Supplemental Report section of the MRP in the report called: *Order 2 Soil Survey for the North Private Lease Expansion of the Coal Hollow*

Mine (November 2014). The soil survey map is Drawing 2-3.

222.300 Soil Descriptions

Based on the order 2 soils survey that was completed on 2008, the following soil map unit descriptions and productivities apply. Additional information describing each soil map unit is contained in Appendix 2-1.

1 A Family – Wapiti Family complex, 3 to 8 percent slopes

General Description

Map unit 1 is dominated by clayey soils with very slow hydraulic conductivity rates of less than 0.04 inches per hour based on the silty clay soil texture (p. 91, Renard, 1997). The depth to Tropic shale is greater than 40 inches in the major soils (A and Wapiti soil families), but minor inclusions with Tropic shale from 20 to 40 inches deep occur. The map unit is dominated by big sagebrush and grasses.

This map unit occurs at the north end of the map unit where the Coal Hollow project proposes to build facilities and establish topsoil and subsoil stockpiles.

Taxonomic Soil Classifications

Percent of Map Unit	Soil Series Family	Taxonomic Family	Typifying Soil Pedon
65	A Family	fine, mixed, superactive, mesic Aridic Calciustept	1*
20	Wapiti Family	fine-loamy, mixed, superactive, mesic Calcidic Argiustoll	32
10	D Family	fine, mixed, superactive, mesic Aridic Calciustoll	33
5	M	fine, mixed, superactive, mesic Aridic Haplustepts	26
* Lab analysis of typifying soil pedon for map unit.			

Map unit 1 description is continued on page 2-5.

Typifying Soil Pedon Descriptions

Soil colors are for dry soil unless specified otherwise.

The typifying soil pedon for A family soils in map unit 1 is soil pedon 1. The surface is a grayish brown clay loam 12 inches thick, dark grayish brown (moist). The subsoil (calcic) consists of light brownish gray silty clay, light olive brown (moist). Decomposing Tropic shale occurs at 42 inches below the surface.

The typifying soil pedon for the Wapiti family soils in map unit 1 is soil pedon 32. The mollic surface is a brown loam 8 inches thick, very dark grayish brown (moist). The subsurface (argillic) is a pale brown clay loam and silty clay, brown (moist). The subsoil (calcic) is pink loam to 6 feet, brown (moist). The underlying soil to nearly 12 feet is light yellowish brown silty clay over pink coarse sands with 10 percent faint strong

brown mottles.

Supporting Soil Pedons

Soil family A is also represented by soil pits 27 and 30 in map unit A. Soil pit 27 does not have Tropic shale within 140 inches of the surface. Soil pit 30 has decomposing Tropic shale at 105 inches below the surface.

Laboratory Analysis

Analysis of soil samples from soil pit 1 had a poor soil pH (8.7) from 24 to 42 inches and fair lime percents (22.6 to 28.3 percent) throughout the soil profile. The silty clay texture at 24 inches is in the poor category for texture. SAR increases gradually with depth to 4.02 in the 24 to 42 inch horizon and then reaches 12.3 in the tropic shale below 42 inches.

Soil Inclusions

Small inclusions of D Family and N Family soils occur within map unit 1. D Family soils are similar to the A Family soils, but have a mollic epipedon (dark surface). The N family soils are very deep, similar to the D Family soil, but have aquic soil conditions below 20 inches and are located in concave depressions within map unit 1.

2 M Family – Calendar Family - D Family complex, 3 to 8 percent slopes

General Description

This map unit is dominated by soils with Tropic shale parent material at 20 to 72 inches below the surface. The map unit is dominated by big sagebrush and grasses with some pinyon pine and Utah juniper encroaching along edges of the map unit near map unit 5. This map unit is dominated by clayey soils with very slow hydraulic conductivity rates of less than 0.04 inches per hour based on the silty clay soil texture (p. 91, Renard, 1997).

This map unit occurs at the north end of the map unit where the Coal Hollow project proposes to build facilities. A second small delineation of map unit 2 occurs along the south boundary of the proposed year 1 mining area west of the county road.

Taxonomic Soil Classifications

Percent of Map Unit	Soil Series Family	Taxonomic Family	Typifying Soil Pedon
60	M Family	fine, mixed, superactive, mesic Aridic Calciustepts	3*
25	Calendar Family	fine, mixed, superactive, mesic Aridic Haplustepts	4*
15	D family	fine, mixed, superactive, mesic Aridic Calciustoll	2*
* Lab analysis of typifying soil pedon for map unit.			

Typifying Soil Pedon Descriptions

The typifying soil pedon for M family soils in map unit 2 is soil pedon 3. The surface is a brown loam 4 inches thick, dark brown (moist). The subsurface (cambic) is a grayish brown clay loam and silty clay loam 15 inches thick, brown (moist). The underlying subsoil to 33 inches is light brownish gray silty clay, light olive brown (moist). Tropic shale parent material occurs at 33 inches below the surface.

The typifying soil pedon for Calendar family soils in map unit 2 is pedon 4. The surface is pale brown silty clay 4 inches thick, dark grayish brown (moist). The subsurface (cambic) is light brownish gray silty clay moderate to strong structure, dark grayish brown (moist) to 31 inches. Tropic shale parent material occurs at 31 inches.

The typifying soil pedon for D family soils in map unit 2 is pedon 2. The surface (mollic) is brown clay loam 12 inches thick, very dark grayish brown (moist). The subsurface (cambic and calcic) is pale brown silty clay and clay to 48 inches deep, brown (moist). The subsoil is white silty clay to 72 inches, brown (moist). Tropic shale parent material occurs at 72 inches below the surface.

Supporting Soil Pedons

Soil pedon 12 is representative of soil type M and is located in the delineation of map unit 2 along the south boundary of the year 1 mining area. The depth to Tropic shale in pedon 12 is 26 inches.

Laboratory Analysis

The main limiting feature of soils in map unit 2 is an increase of conductivity and SAR into the fair range as the soil depth reaches the interface with Tropic shale. The percent lime in the soil ranges from 18.6 to 27.5 above the Tropic shale. The saturation percentage increases with the percent clay, but remains in the fair range even with the clay and silty clay.

3 Cibeque Family - Wapiti Family complex, 3 to 8 percent slopes

General Description

Map unit 3 is characterized by very deep soils that show some indication of alluvial deposition most likely from the large alluvial fan that formed this portion of Sink Valley. Recent soil deposition from nearby Robinson Creek is indicated in pedon 6 by an increase of organic matter at 12 inches below the soil surface.

Taxonomic Soil Classifications

Percent of Map Unit	Soil Series Family	Taxonomic Family	Typifying Soil Pedon
60	Cibeque	fine-loamy, mixed, superactive, mesic Aridic Calciustept	6*

30	Wapiti	fine-loamy, mixed, superactive, mesic Calcidic Argiustoll	31
5	A Family	fine, mixed, superactive, mesic Aridic Calciustept	
5	Calendar Family	fine, mixed, superactive, mesic Aridic Haplustepts	
* Lab analysis of typifying soil pedon for map unit.			

Typifying Soil Pedon Descriptions

The typifying soil pedon for Cibeque family soils in map unit 3 is soil pedon 6. The surface is brown loamy sand 12 inches thick, dark yellowish brown (moist). The subsoil (calcic) is pale brown loam and sandy loam to 34 inches deep, brown (moist). The underlying soil to 60 inches is light grayish brown silty clay, brown (moist).

The typifying soil pedon for Wapiti family in map unit 3 is soil pedon 31. The surface (mollic) is dark grayish brown loam 7 inches thick, dark brown (moist). The subsurface (argillic) is light yellowish brown clay loam to 17 inches, dark yellowish brown (moist). The subsoil (lower argillic and calcic) is light brownish gray and brown clay loam and loam to 52 inches, grayish brown and brown (moist). The underlying soil to 110 inches is very pale brown sandy loam and loamy sand, brown and yellowish brown (moist).

Supporting Soil Pedons

Soil pedon 13 is representative of Cibeque family in map unit 3.

Laboratory Analysis

Soil pH increases to the fair category (8.3 to 8.5) at 6 inches below the surface in pedon 6. The soil pH is consistent with percent lime in fair category (18.4 to 29.2). The loamy sand surface has a fair water holding capacity. Organic matter has an irregular increase at 12 inches from 0.7 in the A2 horizon to 2.6 in the upper Bk horizon.

Soil Inclusions

Small inclusions of A and Calendar soil families occur in map unit 3. A family soils are similar to Cibeque soils, but have a higher percentage of clay in the control section (10 to 40 inches). Calendar soils are very deep but do not have either an argillic horizon (increase in illuvial clays) or a calcic horizon within 40 inches of the soil surface.

4 Jonale Family – Graystone cobbly substratum Family - Wapiti Family complex, 3 to 8 percent slopes

General Description

Map unit 4 is characterized by very deep fine-loamy and coarse-loamy soils with mollic epipedons and calcic horizons. Lime accumulations below 12 to 22 inches are common in these soils. Soil pH is strongly alkaline below 22 inches in some soils. Vegetation in this map unit is big sagebrush and grasses.

Taxonomic Soil Classifications

Percent of Map Unit	Soil Series Family	Taxonomic Family	Typifying Soil Pedon
50	Jonale Family	fine-loamy, mixed, superactive, mesic Aridic Calciustoll	17*
25	Graystone cobbly substratum family	coarse-loamy, mixed, superactive, mesic Aridic Calciustoll	39*
15	Wapiti Family	fine-loamy, mixed, superactive, mesic Calcidic Argiustoll	19*
5	D Family	fine, mixed, superactive, mesic Aridic Calciustoll	7*
5	A Family	fine, mixed, superactive, mesic Aridic Calciustept	
* Lab analysis of typifying soil pedon for map unit.			

Typifying Soil Pedon Descriptions

The typifying soil pedon for Jonale family in map unit 4 is soil pedon 17. The surface (mollic) is a brown clay loam 9 inches thick, dark brown (moist). The subsurface (cambic) is a pale brown clay loam to 18 inches, brown (moist). The lower subsurface (Bwk) to 45 inches is light yellowish brown loam and clay loam, dark yellowish brown (moist). The underlying subsoil (calcic) is very pale brown clay loam and silty clay to 80 inches, yellowish brown (moist).

The typifying soil pedon for Graystone cobbly substratum family in map unit 4 is soil pedon 39. The surface is brown clay loam 12 inches thick, dark brown (moist). The subsurface (calcic) is a very pale brown to light yellowish brown sandy loam to 36 inches deep, yellowish brown (moist) with 0 to 15 percent gravels and cobbles. The underlying subsoil is very pale brown very cobbly loamy sand to 75 inches, brown (moist).

The typifying soil pedon for Wapiti family in map unit 4 is soil pedon 19. The surface (mollic) is a grayish brown loam 6 inches thick, very dark grayish brown (moist). The subsurface (upper argillic) is a brown and pale brown clay loam to 24 inches deep, dark grayish brown and yellowish brown (moist). The lower subsurface (lower argillic and upper calcic, Btk) is a pale brown loam to 37 inches deep, brown (moist). The underlying subsoil (calcic) is a pale brown and light yellowish brown sandy loam to 90 inches deep, yellowish brown (moist).

Supporting Soil Pedons

Jonale family is represented by soil pedons 5, 8, 10, 18B, 23, 34, and 35. Soil family H is represented by soil pedons 11, 36, and 37.

Laboratory Analysis

Jonale soil family is characterized by soil pH in the poor range of 8.6 to 9.0 (Utah DOGM, 2005) at depths below 22 to 40 inches. This strongly alkaline soil pH corresponds to lime percentages of greater than 30 in this same portion of the soil profile.

Graystone cobbly substratum soil family is dominated by sandy loam and loamy sand

textures with some clay loam. Lime accumulation occurs below 12 to 16 inches, but percentages are lower relative to the fine-loamy type C soils. Soil pH becomes strongly alkaline at depths of 48 inches in some pedons. There is 15 to 45 percent gravels and cobbles below 36 inches.

Wapiti soil family has fair levels of carbonates throughout the soil profile. Soil pH was measured as poor below 68” in soil pedon 19.

Soil Inclusions

Soil family D is represented by pedon 7 in map unit 4. There are also small inclusions of soil family A where map unit 4 borders map units 1 and 11.

5 Calendar Family - M Family – Drifity Family complex, 8 to 25 percent slopes

General Description

These soils are moderately deep (20 to 40 inches) to shallow (less than 20 inches to Tropic shale. The moderately deep soils have clayey textures, while the shallow soils are loamy. Vegetation is pinyon pine, Utah juniper, black sage and grasses.

Taxonomic Soil Classifications

Percent of Map Unit	Soil Series Family	Taxonomic Family	Typifying Soil Pedon
45	Calendar Family	fine, mixed, superactive, mesic Aridic Haplustepts	24*
30	M family	fine, mixed, superactive, mesic Aridic Calciustept	25*
20	Drifity Family	loamy, mixed, superactive, calcareous, mesic Aridic Lithic Ustorthent	49*
5	Zigzag	Clayey, mixed, superactive, calcareous, mesic, shallow Aridic Ustorthent	
* Lab analysis of typifying soil pedon for map unit.			

Typifying Soil Pedon Descriptions

The typifying soil pedon for Calendar family in map unit 5 is soil pedon 24. The surface is olive brown clay 5 inches thick, dark grayish brown (moist). The subsurface (cambic) is dark grayish brown and olive clay with moderate to strong blocky structure to 32 inches. Tropic shale parent material is at 32 inches.

The typifying soil pedon for M family in map unit 5 is soil pedon 25. The surface is covered with a half inch of decomposing needles and twigs. The soil surface is light brown clay 5 inches thick, brown (moist). The subsurface (calcic) is brown and strong brown clay with lime accumulations, dark brown (moist). Tropic shale parent material is at 32 inches.

The typifying soil pedon for Drifity family in map unit 5 is soil pedon 49. The surface

light yellowish brown silty clay loam 3 inches thick, light olive brown (moist). The subsoil is a light olive brown loam to 10 inches, olive brown (moist). Interbeded sandstone and Tropic shale are at 10 inches.

Laboratory Analysis

Calendar soil family is characterized by percent clay of 44 to 47 with correspondingly high saturation percentages of 73.6 to 91.2. Conductivity increases to 7.8 at 17 inches below the surface.
Soil type M is characterized by percent clay of 40 to 47 with correspondingly high saturation percentages of 58.5 to 80.6 in the upper 20 inches of the soil profile. The percent clay decreases to 33 percent below 20 inches. Lime percentage is greater than 30 in the 5 to 20 inch depth, but less than 5 above and below this zone.

Drifity soil family is characterized by pH of 8.1 to 8.4, lime percentage of 18, and SAR of less than 0.1.

Soil Inclusions

There are some inclusions of Zigzag soils that are shallow (less than 20 inches) to Tropic shale. Zigzag soils are clayey.

6 Graystone – Cookcan – Jonale Family complex, 1 to 5 percent slopes

General Description

These medium to coarse textured soils are very deep. Wet soil conditions are present at varying depths in all of the map unit soils. The depth to wet soil conditions varies from 14 to 58 inches. This map unit is not a good source of subsoil. It is estimated that these soils are slower to warm up in the spring due to the wet soil conditions. Vegetation is grasses, sedges, and forbs.

Taxonomic Soil Classifications

Percent of Map Unit	Soil Series Family	Taxonomic Family	Typifying Soil Pedon
45	Graystone	coarse-loamy, mixed, superactive, mesic Aridic Calciustoll	15*
20	Cookcan	coarse-loamy, mixed, superactive, frigid Typic Calciaquoll	9B*
20	Jonale Family	fine-loamy, mixed, superactive, mesic Aridic Calciustoll	16*
15	I Family	fine-loamy, mixed, superactive, frigid Aquic Calciustept	14*
* Lab analysis of typifying soil pedon for map unit.			

Typifying Soil Pedon Descriptions

The typifying soil pedon for Graystone soils in map unit 6 is soil pedon 15. There is a

dense root mat 1 inch thick on the surface. The surface is brown sandy loam 8 inches thick, dark brown (moist). The subsurface (cambic) is pale brown loam with moderate structure, dark yellowish brown (moist) to 20 inches. The subsoil (calcic) is very pale brown loam to 58 inches deep, yellowish brown (moist). The underlying soil is yellow and brownish yellow sandy loam with common prominent mottles to 96 inches, yellowish brown (moist).

The typifying soil pedon for Cookcan soils in map unit 6 is soil pedon 9B. The surface is dark grayish brown loam 6 inches thick, very dark grayish brown (moist). The lower surface is grayish brown sandy clay loam to 14 inches with few faint mottles, dark grayish brown (moist). The subsurface is light brownish gray sandy loam with common prominent mottles, dark gray (moist). The subsoil is light gray sandy loam with many prominent mottles, grayish brown (moist). The soil was wet below 48 inches.

The typifying soil pedon for Jonale soil family in map unit 6 is soil pedon 16. There is a dense root mat 1 ½ inch thick on the surface. The surface is dark grayish brown silty clay loam 8 inches thick, very dark grayish brown (moist). The subsurface (cambic) is pale brown silty clay to 18 inches, strong brown (moist). The subsoil is pink clay loam to 36 inches, brown (moist). The lower subsoil is pink silty clay loam and loam with few faint strong brown mottles to 68 inches, brown (moist). The underlying soil is light brownish gray clay loam with common prominent yellowish red mottles, grayish brown (moist).

Supporting Soil Pedons

Soil pedon 9A is similar to Graystone soils, but it has carbonates throughout the soil profile without any zone of accumulation.

Laboratory Analysis

Strongly alkaline soil pH (8.6 to 9.0) within 12 to 20 inches of the soil surface is the main limiting feature of the soils in map unit 6. Soil pedon 9A has very strongly alkaline pH (greater than 9.0) below 12 inches of the surface.

Lime percentage exceeds 30 in 3 of 5 pedons within 12 to 20 inches of the surface. Lime percentage ranges from 15 to 26 in the other two pedons from the surface to 48 inches.

Soil Inclusions

Soil pedon 14 is representative of I family soils within map unit 6 that do not have a mollic epipedon (dark surface) and have aquic (wet) soil conditions within 30 inches of the surface. These soils have a calcic horizon.

7 Happyhollow Family – Alamosa complex, 1 to 5 percent slopes

General Description

This soil map unit is located on a Tropic shale structural bench on the east side of the Sink Valley fault. Soils are characterized by clay and a high water table that is perched

on top of the heavy clay soils. The high water table is at or within a foot of the soil surface during the wet period of the year. It is estimated that these soils are slower to warm up in the spring due to the wet soil conditions. Vegetation is sedges and forbs.

Taxonomic Soil Classifications

Percent of Map Unit	Soil Series Family	Taxonomic Family	Typifying Soil Pedon
55	Happyhollow Family	fine, mixed, superactive frigid Aeric Epiaquept	38*
20	Alamosa	fine-loamy, mixed, superactive, frigid Typic Argiaquoll	18A*
10	Jicarilla Family	fine, mixed, superactive, frigid Typic Argiaquoll	43
10	Tetonview Family	fine-loamy, mixed, superactive frigid Aeric Calciaquoll	40*
3	Brumley	fine-loamy, mixed, superactive, mesic Calcidic Haplustalf	
2	Jonale Family	fine-loamy, mixed, superactive, mesic Aridic Calciustoll	
* Lab analysis of typifying soil pedon for map unit.			

Typifying Soil Pedon Descriptions

The typifying soil pedon for Happyhollow family soils in map unit 7 is soil pedon 38. The surface is dark grayish brown (moist) silty clay 6 inches thick. The subsurface is a yellowish brown (moist) silty clay 6 inches thick. The calcic horizon begins at 12 inches below the surface and is a light yellowish brown (moist) to very pale brown (moist) silty clay. The calcic horizon continues to 48 inches or deeper. The water table was at 29 inches when the pit was described in March 2007. Mottles and gleyed soil were observed below 12 inches. Vegetation is grasses, sedges, widely scattered Wyoming big sagebrush, and wild rose.

The typifying soil pedon for Alamosa soils in map unit 7 is soil pedon 18A. The mollic surface is a very dark grayish brown (moist) loam to 7 inches. The cambic horizon is a brown (moist) loam to 15 inches deep. The calcic horizon is a light olive brown (moist) sandy loam to 30 inches. The underlying soil is grayish brown (moist) clay loam and sandy clay loam to 60 inches deep. Mottles were observed below 7 inches. The water table was at 51 inches when the described in September 2006.

Supporting Soil Pedons

Happyhollow family soil type was observed in pedon 45 within map unit 7 and a similar clayey soil in pedon 44. The Alamoss soil was also observed in pit 46.

Laboratory Analysis

The Happyhollow family soil is characterized by silty clay from the surface down to 24 inches or greater. Soil pH is 8.3 to 8.5 in the 12 to 24” horizon. Saturation percentage ranges from 69.9 to 81.8 in the upper 24 inches. The calcium carbonate equivalent ranges from 17.8 to 28.3 in the upper 20 inches and then increases to 44.5 below 20 inches. This soil pit was not sampled below 24 inches, because of the high water table.

Alamosa soil is characterized by medium textured soils (loam, clay loam, and sandy clay loam) in the upper 60 inches. The calcium carbonate equivalent ranges increases from 20.2 percent in the upper 7 inches to 29.3 percent in the 30 to 45 inch horizon.

Soil Inclusions

A soil similar to Alamosa soils, but with more clay in the control section is in localized areas. Soil mottles were observed and water was flowing into pit 43 when it was described in April 2007. The water table appeared to be perched on top of the underlying clay horizon at 54 inches.

Tetonview family soils were identified in soil pit 40. Mottles were observed below 6 inches and a water table at 23 inches when the pit was described in March 2007. This soil has a dark surface (mollic) and a calcic horizon.

Dry soil profiles occur on small isolated mounds within map unit 7. These non-hydric soils include Brumley and Jonale family soils. Both are very deep soils with a calcic horizon. Jonale family soils have a dark surface (mollic).

8 Brumley – Graystone Cobbly - Snilloc complex, 3 to 8 percent slopes

General Description

These soils developed in very deep alluvium on the east side of the Coal Hollow project area. They are medium to coarse textured. Evidence of a fluctuating water table was observed in most soils below 48 to 60 inches, depending on location and physiographic setting. This map unit would be a good source of cover material, but most of the planned disturbance in this area will be limited to cover soil stockpiles.

Taxonomic Soil Classifications

Percent of Map Unit	Soil Series Family	Taxonomic Family	Typifying Soil Pedon
40	Brumley	fine-loamy, mixed, superactive, mesic Calcidic Haplustalf	22*
30	Graystone	coarse-loamy, mixed, superactive, mesic Aridic Calciustoll	20*
20	Snilloc	coarse-loamy, mixed, superactive, mesic Aridic Calciustept	21*
10	Jonale Family	fine-loamy, mixed, superactive, mesic Aridic Calciustoll	
* Lab analysis of typifying soil pedon for map unit.			

Typifying Soil Pedon Descriptions

Colors are for dry soil unless otherwise noted.

The typifying soil pedon for the Brumley soils in map unit 8 is soil pedon 22. The surface is pale brown sandy loam to 6 inches. The argillic and upper calcic horizon is a light yellowish brown silty clay loam and sandy clay loam to 28 inches. The underlying soil is very pale brown sandy loam to 84 inches. Mottles increase significantly below 48 inches indicating that there is fluctuating water table during wet years. This soil supports Gamble oak, snowberry, grasses, and forbs.

The typifying soil pedon for the Graystone soil in map unit 8 is soil pedon 20. The surface is brown loam to 6 inches. The cambic horizon is light yellowish brown clay loam to 13 inches. The calcic horizon is very pale brown to light yellowish brown sandy loam and loamy sand to 54 inches. The underlying soil is a light yellowish brown loam to

72 inches and loamy sand to 96 inches. This soil supports Pinyon pine, Utah Juniper, Gamble oak, and snowberry.

The typifying soil pedon for Snilloc soils in map unit 8 is soil pedon 21. The surface is a light yellowish brown sandy clay loam to 8 inches. The calcic horizon is a pale brown sandy clay loam to 18 inches. The underlying soil is a pale brown strongly alkaline sandy loam to 96 inches. This soil was described in an opening of Wyoming big sagebrush within a larger area of Gamble oak.

Supporting Soil Pedons

A moist phase of the Brumley soil was observed in pit 47 in big sagebrush in map unit 8. A few faint mottles were observed below 24 inches. The amount of soil mottling increased significantly below 44 inches. This soil is on a low mound surrounded on three sides by wet soils in map unit 7. A water table was not observed when the pit was described in April 2007, but the mottles indicate that it is common for the water to rise within 44 inches of the surface in most years, and 24 inches in wet year.

Laboratory Analysis

The Brumley soil has calcium carbonate equivalents ranging from 17.5 to 23.8 percent.

The Graystone soil has a low saturation percentage in the 13 to 28 inch horizon (calcic). Calcium carbonate equivalents range from 16.5 to 25.4 percent. Available water capacity is 0.08 in layers of loamy sands below 28 inches.

The Snilloc family soil is characterized by strongly alkaline soil pH (8.7) below 36 inches. Calcium carbonate equivalents range from 16.8 to 29.8 percent.

Soil Inclusions

The Jonale family soils occur within this map unit. These soils are similar to Brumley soils, but have a dark surface (mollic).

9 D Family - Deacon complex, 5 to 30 percent slopes

General Description

These clayey soils are very deep and dominated by clayey textures. They have a dark surface (mollic epipedon). The D family soil has an increase in lime at 6 to 12 inches below the surface, while the Deacon soil has similar levels of lime throughout the soil profile. Soils in this map unit appear to have developed from the large alluvial fan that covers most of Sink Valley. The map unit is delineated along Robinson Creek and in an area south of the creek that could be the remnants of a historic channel. Vegetation is dominantly big sagebrush, rabbitbrush, and grasses with pinyon pine and Utah juniper encroaching from adjacent areas.

Taxonomic Soil Classifications

Percent of Map Unit	Soil Series Family	Taxonomic Family	Typifying Soil Pedon
55	D Family	fine, mixed, superactive, mesic Aridic Calciustoll	41*
30	Deacon	fine-loamy, mixed, superactive, mesic Aridic Haplustoll	42*
10	A Family	fine, mixed, superactive, mesic Aridic Calciustept	
5		Creek bottom	
* Lab analysis of typifying soil pedon for map unit.			

Typifying Soil Pedon Descriptions

The typifying soil pedon for the D family soil in map unit 9 is soil pedon 41. The surface is brown sandy clay loam to 6 inches, dark brown (moist). The lower surface is brown clay to 12 inches, dark brown (moist). The subsurface (cambic) is pale brown silty clay to 36 inches, brown (moist). The subsoil (calcic) is very pale brown silty clay loam and sandy loam to 80 inches, yellowish brown (moist).

The typifying soil pedon for Deacon soils in map unit 9 is soil pedon 42. The surface is brown loam 9 inches thick, very dark grayish brown (moist). The subsurface (cambic) is pale brown silty clay to 24 inches, brown (moist). The upper subsoil (lower cambic) is pale brown sandy clay loam to 36 inches, brown (moist). The lower subsoil is light yellowish brown loam to 48 inches, yellowish brown (moist).

Supporting Soil Pedons

Soil pedon 29 is representative of the D family soil in map unit 9.

Laboratory Analysis

Poor soil pH at depth and clayey horizons characterize soils in map unit 9. Soil pH is poor below 64 inches in the D family soil (pit 41) and below 36 inches in the Deacon soil. Horizons of silty clay and clay occur in the D family soil (pit 41) between 6 and 36 inches. The clayey horizon in the Deacon soil is between 9 and 24 inches.

Soil Inclusions

The channel area of Robinson Creek comprises a small portion of this map unit. The creek bottom is not vegetated.

10 Zigzag clay, 8 to 25 percent slopes

General Description

These clayey soils are shallow to Tropic shale and formed along the Sink Valley escarpment. Vegetation is pinyon pine, Utah juniper, black sage, and Indian ricegrass.

Taxonomic Soil Classifications

Percent of Map Unit	Soil Series Family	Taxonomic Family	Typifying Soil Pedon
85	Zigzag	clayey, mixed, superactive, nonacid, mesic, shallow Aridic Ustorthent	50*
10	Drifity Family	loamy, mixed, superactive, nonacid, mesic Aridic Lithic Ustorthent	
5	Calendar Family	fine, mixed, superactive, mesic Aridic Haplustepts	
* Lab analysis of typifying soil pedon for map unit.			

Typifying Soil Pedon Description

The typifying soil pedon for the Zigzag soil in map unit 10 is soil pedon 50. The surface is light brownish gray clay to 4 inches, dark grayish brown (moist). The subsurface is light brownish gray clay to 19 inches, dark grayish brown and olive brown (moist). Tropic shale is at 19 inches.

Laboratory Analysis

Clayey soil texture is the main limiting feature to the Zigzag soil in map unit 10. Lime percentage is between 18 and 19 throughout the soil profile. SAR is less than 1. Soil pH is in the good to fair range (8.1 to 8.4).

Soil Inclusions

The Drifity family soil occurs along ridges where the Tropic shale is interbeded with sandstone. These soils are loamy and less than 20 inches deep.
Calendar family soil occur in concave toeslope areas. These soils are clayey and moderately deep (20 to 40 inches) to Tropic shale.

11 A Family clay, 8 to 25 percent slopes

General Description

These soils are very deep and are on the footslope and backslope of the Sink Valley fault escarpment. Vegetation is grasses, rabbitbrush, and big sagebrush.

Taxonomic Soil Classifications

Percent of Map Unit	Soil Series Family	Taxonomic Family	Typifying Soil Pedon
85	A Family	fine, mixed, superactive, mesic Aridic Calciustept	28*
10	Calendar Family	fine, mixed, superactive, mesic Aridic Haplustepts	
5	Zigzag	Clayey, mixed, superactive, nonacid, mesic, shallow Aridic Ustorthent	
* Lab analysis of typifying soil pedon for map unit.			

Typifying Soil Pedon Description

The typifying soil pedon for the A family soil in map unit 11 is soil pedon 28. The surface is grayish brown clay to 8 inches, dark grayish brown (moist). The subsurface (cambic) is gray clay with moderate blocky structure to 24 inches, grayish brown (moist). The upper subsoil (calcic, Bwk) is gray clay with common fine soft calcium carbonate masses to 48 inches, grayish brown (moist). The lower subsoil (calcic, Bk) is light grayish brown clay with common fine and medium soft calcium carbonate masses to 102 inches, grayish brown (moist).

Laboratory Analysis

Clay texture is the primary limiting feature with the A family soil in map unit 11. SAR and conductivity increase significantly in the 24 to 48 inch horizon, but both are still within the fair range (Utah DOGM, 2005). Lime percentage ranges from 17 to 19. Samples were not available for analysis for the 48 to 102 inch zone.

Soil Inclusions

Inclusions of the Calendar family soil occur along shoulders of hills and ridges. These soils are clayey and moderately deep (20 to 40 inches) to Tropic shale.

Small inclusions of the Zigzag soil occur on the summits of ridges and hills. These soils are clayey and shallow (less than 20 inches) to Tropic shale.

12 Manzanst Taxadjunct Family clay, 3 to 12 percent slopes

General Description

These clayey soils are deep to very deep to Tropic shale and formed on gently sloping to moderately steep slopes along the west side of Sink Valley. Vegetation is pinyon pine, Utah juniper, black sage, and Indian ricegrass. The very deep phase is on the backslopes and footslopes. The deep phase (40 to 60 inches to Tropic shale) of Manzanst family soil occurs on the shoulders of the hill sideslopes.

Taxonomic Soil Classifications

Percent of Map Unit	Soil Series Family	Taxonomic Family	Typifying Soil Pedon
85	Manzanst taxadjunct, very deep phase	very fine, mixed, superactive, nonacid, mesic, Aridic Ustorthent	48*
10	Manzanst taxadjunct, deep phase	very fine, mixed, superactive, nonacid, mesic, Aridic Ustorthent	60
5	A Family	fine, mixed, superactive, mesic Aridic Calciustepts	
* Lab analysis of typifying soil pedon for map unit.			

Typifying Soil Pedon Description

The typifying soil pedon for the Manzanst taxadjunct soil in map unit 10 is soil pedon 48. The surface is grayish brown clay (moist) 3 inches, very dark grayish brown (moist). The subsurface is light brownish gray clay to 30 inches, dark grayish brown (moist). The substratum is light brownish gray clay with 3 to 10 percent very fine and fine calcium carbonate masses to 84 inches, dark grayish brown (moist).

The typifying pedon for the Manzanst taxadjunct deep phase is pedon 60. It is similar to pedon 48. Tropic shale is at 48 inches.

Laboratory Analysis

Clayey soil texture and SAR are the main limiting features of the Manzanst soil family in map unit 12. The SAR ranges from 10.80 to 12.70 below 12 inches.

Soil Inclusions

The A family soil occurs on the toeslopes and in swales where alluvium has accumulated. These soils are clayey and very deep (greater than 60 inches). They have an accumulation of carbonates in the subsoil.

13 A Family – Happyhollow Family complex, 1 to 5 percent slopes

General Description

These clayey soils are very deep to Tropic shale and formed on nearly level to gently sloping slopes in the south central portion of Sink Valley. Vegetation is grasses. The very deep phase is on the backslopes and footslopes. The deep phase (40 to 60 inches to Tropic shale) of Manzanst family soil occurs on the shoulders of the hill sideslopes.

Taxonomic Soil Classifications

Percent of Map Unit	Soil Series Family	Taxonomic Family	Typifying Soil Pedon
80	A Family	fine, mixed, superactive, mesic Aridic Calciustepts	59
15	Happyhollow Family	fine, mixed, superactive frigid Aeric Epiaquept	45
5	I Family	fine-loamy, mixed, superactive, frigid Aquic Calciustept	52
* Lab analysis of typifying soil pedon for map unit.			

Typifying Soil Pedon Descriptions

The typifying soil pedon for the A family soil in map unit 13 is soil pedon 59. The surface is light yellowish brown clay loam to 10 inches, dark grayish brown (moist). The subsurface is light yellowish brown and very pale brown clay loam to 45 inches, yellowish brown and pale brown (moist). The substratum is very pale brown and pale yellow sandy clay loam to 76 inches. Reddish yellow medium and coarse mottles were observed below 62 inches.

The typifying soil pedon for the Happyhollow family soil is soil pedon 45. The surface is light brownish gray loam to 12 inches, dark grayish brown (moist). The subsurface is light gray and very pale brown sandy clay loam to 48 inches, gray and light yellowish brown (moist). The substratum is very pale brown sandy clay loam to 84 inches, light yellowish brown (moist). The lower substratum is light gray silty clay to 100 inches, gray (moist). Yellow and brownish yellow medium and coarse mottles were observed below 5 inches.

Laboratory Analysis

Field conductivity (ECe) measurements for soil pit 59 ranged from 0.39 to 1.30 mmhos/cm.

Lab analysis of soil pit 28 is representative of the A family soil in map unit 13. Clay texture is the primary limiting feature with the A family soil in map unit 13. SAR and conductivity increase significantly in the 24 to 48 inch horizon (pedon 28), but both are still within the fair range (Utah DOGM, 2005). Lime percentage ranges from 17 to 19. Samples were not available for analysis for the 48 to 102 inch zone.

Soil Inclusions

The I family soils are similar to the A family soil, but they have aquic conditions below 20 inches. Reddish yellow fine mottles were observed in soil pedon 52 below 24 inches.

Soil map unit descriptions for the North Private Lease soil survey area are in Section Three in Volume 11: Supplemental Report section of the MRP in the report called: *Order 2 Soil Survey for the North Private Lease Expansion of the Coal Hollow Mine* (November 2014).

Soils in the Pit 10 Borrow were examined on July 26 and 27, 2016. Soil mapping in the southwest portion of the area was updated based on additional soil descriptions and

laboratory analysis. The results of this field examination and laboratory analysis are described in Appendix 2-4 called: *Topsoil and Subsoil Sources and Substitute Sources in the Pit 10 Borrow Area*.

222.400 Present and Potential Productivity of Existing Soils

Soils in the Coal Hollow project area support big sagebrush, grasses (native and introduced species), pinyon pine, Utah juniper, and Gambel oak. Detailed descriptions of the present and potential productivity of the soils are detailed in Chapter 3, Section 321.200.

Soils in the northern portion of the North Private Lease area are in agricultural production of alfalfa and small grains, while soils in the southern portion support big sagebrush, rabbitbrush, grasses (native and introduced species), pinyon pine, Utah juniper, Russian olive, and Gambel oak. Detailed descriptions of the present and potential productivity are detailed in Chapter 3, Section 321.200.

223. Soil Characterization

This soil survey was made in accordance with the guidelines for an order 2 soil survey as detailed in the Soil Survey manual (USDA 1993). Soils were classified using the Keys to Soil Taxonomy, Ninth Edition (USDA 2003). Soils for the New Dame Lease IBC were classified using the Keys to Soil Taxonomy, Eleventh Edition (NRCS 2010). Representative soil samples were submitted for laboratory analysis of the parameters outlined by the Utah Division of Oil Gas and Mining's *Guidelines for Management of Topsoil and Overburden* (2005).

The North Private Lease soil survey was made in accordance with the guideline for an order 2 soil survey as detailed in the Soil Survey manual (USDA NRCS 1993). Soils were classified using the Keys to Soil Taxonomy, Twelfth Edition (USDA NRCS 2014d). Representative soil samples were submitted for laboratory analysis of the parameters outlined by the Utah Division of Oil Gas and Mining's *Guidelines for Management of Topsoil and Overburden* (2005).

The Pit10 Borrow Area soil survey update was made in accordance with the guidelines for an order 2 soil survey as detailed in the Soil Survey manual (USDA NRCS 1993). Soils were classified using the Keys to Soil Taxonomy, Twelfth Edition (USDA NRCS 2014d). Representative soil samples were submitted for laboratory analysis of the parameters outlined by the Utah Division of Oil Gas and Mining's *Guidelines for Management of Topsoil and Overburden* (2008).

224. Substitute Topsoil

Based on the 2006-2007 order 2 soil survey, sufficient quantities of suitable topsoil and subsoil are available for reclamation within the project area. The Coal Hollow Project does not plan to use substitute material for topsoil at the time of reclamation. However, if in the future the Coal Hollow mine plan proposes to use selected overburden materials as a supplement or substitute for topsoil, an application will be

provided to the DOGM that includes results of analyses, trials, and tests as described under R645-301-232.100 through R645-301-232.600, R645-301-234, R645-301-242, and R645-301-243. DOGM may also require the results of field-site trials or greenhouse tests as required under R645-301-233.

Based on the 2014 order 2 soil survey for the North Private Lease, sufficient quantities of suitable topsoil and subsoil are available for reclamation within the project area. The Coal Hollow mine does not plan to use substitute material for topsoil at the time of reclamation of North Private Lease expansion. However, if in the future the Coal Hollow mine plan proposes to use selected overburden materials as a supplement or substitute for topsoil, an application will be provided to the DOGM that includes results of analyses, trials, and tests as described under R645-301-232.100 through R645-301-232.600, R645-301-234, R645-301-242, and R645-301-243. DOGM may also require the results of field-site trials or greenhouse tests as required under R645-301-233.

A source of substitute subsoil was evaluated as part of the Pit 10 Borrow Area field evaluation on July 26, 2016 and subsequent laboratory analysis. ~~This source of substitute subsoil is located on the interim reclamation slope at the top of the pit 10 highwall. The results of this evaluation and analysis are described in Appendix 2-4 called: *Topsoil and Subsoil Sources and Substitute Sources in the Pit 10 Borrow Area*. There are no plans to use this material as substitute subsoil at this time due to Poor soil pH in some areas, but will remain a source of substitute subsoil until Pit 10 is reclaimed. Additional sampling and analysis will be conducted prior to moving forward with any plans to use the material as substitute subsoil.~~With the addition of LBA Block 1, this material will no longer be considered a source of substitute subsoil.

230. Operation Plan

231. General Requirements

231.100. Methods for Removing and Storing Subsoil and Topsoil

The methods for removing and storing topsoil, subsoil, and other materials will be to first remove the woody plants from the area and place them in piles for later placement in pit backfills. Next, dozers or scrapers will remove the topsoil layer to a depth determined by the soil survey. The topsoil will be stockpiled and protected from wind and water erosion. Stockpiles that will be in place for less than 1 year will be planted with "Quick Guard" at the recommended rate of 10 lbs. /acre. Those stockpiles that will be in place for at least one year will be seeded and covered with mulch during the appropriate season. Side slopes of stockpiles will be sloped to 3h:1v: The suitable subsoil will then be removed and stockpiled separately from the topsoil. The depth of topsoil and subsoil salvage will be determined by the aforementioned soil survey and in the field during mining by the Coal Hollow environmental technician in consultation with a certified professional soil scientist. Quality control of topsoil salvage depth will be accomplished by leaving pedestals (small islands of topsoil left to verify soil removal depth). Stockpiling of topsoil and subsoil will only occur when direct placement (or live hauling) is not operationally practical. Drawing 2-2 shows planned topsoil stockpiles and topsoil removal plans. Drawing 2-4 shows planned topsoil stockpiles

and topsoil removal plans in the North Private Lease.

For the North Private Lease prior to mining Pit 1 the following steps will be followed:

1. The A horizon (topsoil) will be salvaged along with B horizon (subsoil) to a depth of 14 inches (1.2 feet) from all active mining areas (pits, ponds, roadways, haul roads, storage and repair yards, etc.). The only exception is that topsoil can remain under topsoil storage piles.

2. For the area inside the excavation perimeter of Pit 1, Pond 5 and Pond 6, the remaining subsoil (the B & C horizon above lithic contact, approximately 2.6 feet) will also be removed and stockpiled in a subsoil stockpile. This means that roadways and the subsoil and spoil piles depicted in Drawing 2-4 will be placed on top of native subsoil. This native subsoil will be protected in place beneath the spoil stockpile by using a marker fence to delineate the subsoil surface on 100 ft. centers and by using a gps survey grid of the topography of the subsoil surface layer. The native subsoil will be protected in place on any roadway receiving surface treatment (ie. Gravel, additional fill) by placing marker fence along the roadway centerline. The native subsoil will then be recovered as part of the subsequent mining sequence and placed directly over regraded backfill to the cover depth required in section 232.

4. A soil scientist will monitor the topsoil and subsoil removal and placement of geo-marker.

5.A surveyor will map the surface elevation of the subsoil being protected in place.

Area 1 expanded increases Area 1 by 17.89 acres, all topsoil and subsoil will be salvaged and stockpiled as mining of Pits 7, 8 and 9 progress. Stockpile locations are shown and volumes tabulated for on Drawing 2-4. These stockpiles will remain and be utilized for final reclamation of the last pits mined.

Area 2 encounters Prime Farmland and Soils of Statewide Importance, these are required to be stockpiled by owner and by horizon. The location of these stockpiles can be found on Drawing 2-4. DRH_C, DRH_B, OGP_B, and OGP_A will be on top of an area that has been previously been top soiled and seeded. The remaining stockpiles will be placed on subsoil. All stockpiles from the Prime Farmland and Soils of Statewide Importance weather placed on previously top soiled or subsoiled areas, will be placed on a layer of organic material to demarcate the separation at the time they are replaced in reclamation of the Prime Farmland and Soils of Statewide Importance areas. Those that are placed on topsoil will have the topsoil in the travel paths windrowed to a berm which also will be seeded until final placement. Once the stockpiles on top soil are removed, the area of the stockpile and associated travel paths will require ripping 18” prior to being reseeded.

As with the Coal Hollow Mine, topsoil and subsoil will be removed with dozers and/or scrapers to a depth determined by the soil scientist.

Topsoil and subsoil in Pit B1 will be removed with dozers and/or scrapers to a depth determined by the soil scientist.

231.200. Suitable Substitute Topsoil

The use of substitute topsoil is planned for the Coal Hollow. Location of "Potential Substitute Topsoil" is shown on Drawing 2-2. Demonstration studies of the suitability of topsoil substitutes or supplements will be submitted to the DOGM if the use of topsoil substitutes becomes necessary for future reclamation and revegetation.

Subsoil will be used as interim reclamation cover for the Pit 10 Borrow Area. Organic mulches will be incorporated to improve fertility and soil quality, as detailed in R645-301-244.200. This improved subsoil will be salvaged and stockpiled as cultivated topsoil at the end of the interim reclamation phase of the Pit 10 Borrow Area project. Cultivated topsoil will be used as topsoil during reclamation of the Pit 10 Borrow Area. This operation is described in more detail in Appendix 2-4 called: *Topsoil and Subsoil Sources and Substitute Sources in the Pit 10 Borrow Area*. Salvage and stockpiling of the cultivated topsoil will be monitored by a Certified Professional Soil Scientist.

The use of substitute topsoil is not planned for the North Private Lease based on the 2014 soil survey information. Demonstration studies of the suitability of topsoil substitutes or supplements will be submitted to the DOGM if the use of topsoil substitutes becomes necessary for future reclamation and revegetation.

231.300. Soil Testing for Reclamation

The final seedbed of the reclaimed areas will be prepared by first replacing the subsoil and topsoil in the same order it existed prior to removal by the mining activities. Next, a basic topsoil (top 8 inches of reclamation profile) sampling regime will be implemented prior to seeding that should identify fertility problems and will provide a basis for determining necessary soil amendments. The parameters analyzed will be:

Available phosphorus (P)
Soluble Potassium (K)
Nitrate-Nitrogen

One composite sample will be collected from approximately every 2 to 5 acres based on soil types and variability. Each composite will be comprised of at least 4 sub-samples.

Pre-testing of the soils has been conducted as part of the soils survey. Results from the pre-testing of topsoil and subsoil can be viewed in Table C-1 of Appendix 2-1 (native topsoil and subsoil) and Table C-2 (samples from core hole/overburden pits) of Appendix 2-1.

Pre-testing of the soils has been conducted as part of the North Private Lease soils survey. Results from the pre-testing of topsoil and subsoil can be viewed in

Appendix C of Volume 11: Supplemental Report section of the MRP in the report called: *Order 2 Soil Survey for the North Private Lease Expansion of the Coal Hollow Mine* (November 2014).

Pre-testing of soils in the Pit 10 Borrow Area as part of the Order 2 Soil Survey of the Coal Hollow Mine Disturbance (2009) and as part of the July 26 and 27, 2016 evaluation of the Pit 10 Borrow Area as described in Appendix 2-4 called: *Topsoil and Subsoil Sources and Substitute Sources in the Pit 10 Borrow Area*.

Additional sampling and testing of the subsoil used for interim reclamation will be done prior to its salvage as cultivated topsoil at the end of the interim reclamation phase. Samples will be collected on the basis of approximately one sample per 2.5 acres. Sampling depth will be to 4 feet. This testing will include all parameters listed in Tables 3 and 7 in *Guidelines for Management of Topsoil and Overburden* (DOGM January 2008). Suitability will be evaluated based on the laboratory analysis and parameter limits listed in Tables 4 and 8 in *Guidelines for Management of Topsoil and Overburden* (DOGM January 2008).

Soil pH will be monitored in all subsoil salvaged below 58 inches (147 cm or 4.8 feet) in map unit G. Subsoil with pH greater than 8.8 will not be salvaged, stockpiled, or used for subsoil in the reclamation soil profile. Placement of subsoil within a pH range of 8.6 to 8.8 will be only be placed in the bottom foot (3 to 4 foot depth) of the reclamation soil profile.

231.400. Topsoil Handling

The topsoil will be removed from the mine area and either live hauled to a reclamation area or stored separately. All soil stockpiles piles will be seeded with an appropriate interim seed mix to prevent loss and deterioration by wind and water erosion. Soil stockpiles will have side slopes graded to a maximum 3h:1v. Piles will be bermed or otherwise treated to prevent the transport of sediments away from the pile. Details about soil horizons and zones planned for use as subsoil are detailed in Appendix 2-1. A detailed map showing stockpile designs/locations and soil removal are shown on Drawing 2-2.

Details about soils horizons and zones planned for use as subsoil in the North Private lease are shown on Drawing 2-4 and detailed in Volume 11: Supplemental Report section of the MRP in the report called: *Order 2 Soil Survey for the North Private Lease Expansion of the Coal Hollow Mine* (November 2014).

232. Topsoil and Subsoil Removal

232.100. Separate Layers

All soil materials will be removed in separate layers from the area to be disturbed, and segregated.

Based on soil map units, average depths have been estimated and will be used as a guide and monitored in the field. Refer to Table 4-2 in Appendix

2-1. Soil will be salvaged and directly placed or stockpiled as either topsoil or subsoil.

Based on soil map unit, average depths have been estimated and will be used as a guide and monitored in the field. Quality control of topsoil salvage depth will be accomplished by leaving pedestals (small islands of topsoil left to verify soil removal depth). Refer to Tables 13 and 14 in Volume 11: Supplemental Report section of the MRP in the report called: *Order 2 Soil Survey for the North Private Lease Expansion of the Coal Hollow Mine* (November 2014).

The estimated topsoil, subsoil, and substitute subsoil salvage and replacement depths for each mine area are shown in the following table.

Mining Area	Average Estimated Topsoil Salvage	Average Estimated Subsoil Salvage	Salvage of Upper Shale	Reclamation Soil Profile Depth	Notes
	inches	inches	inches	inches	
1	18	26	0	44	a
1extended	13	33	0	46	a
2	11	37	0	48	b

a. Salvage topsoil; salvage subsoil to depth of Tropic shale; follow sampling protocol for substitute subsoil in Section R645-301-232.720 for reclamation profile.
b. Salvage topsoil; salvage subsoil to 48 inches deep.
c.

Estimated topsoil and subsoil salvage depths were developed for the pit 10 Borrow Area and are detailed in Appendix 2-4 called: *Topsoil and Subsoil Sources and Substitute Sources in the Pit 10 Borrow Area*. Estimated depths of topsoil and subsoil available for salvage by soil map unit and area are detailed in Table 2-4.12. Soil will be salvaged and directly placed or stockpiled as either topsoil or subsoil.

The following table details the estimated topsoil and subsoil salvage depths by map unit in Area 1 Expanded. These salvage estimates were updated based on additional

soil profile evaluations done in Area 1 during March 2016 (Appendix 2-5). The subsoil salvage depth was increased to 4.8 feet in order to provide adequate subsoil for a total reclamation soil profile depth of 48 inches.

Estimated topsoil and subsoil salvage depths by soil map unit in *Area 1 Expanded*.

Map Unit	Estimated Topsoil Salvage Depth[1]	Estimated Subsoil Salvage Depth2	Map Unit Area[3]	Estimated Topsoil Salvage Volume	Estimated Subsoil Salvage Volume
	inches	inches	acres	cubic yards	cubic yards
A1	11	36	10.98	16,238	53,143
A2	11	36	30.46	45,047	147,426
A3	11	36	17.96	26,561	86,926
D	14	31	0.02	38	83
E	13	35	0.46	804	2,165
F	19	29	1.21	3,091	4,718
G	11	37	3.18	4,703	24,797
H	12	36	0.31	500	1,500
J	7	41	0.08	75	441
K	12	34	1.84	2,969	8,411
Total			66.5	100,025	329,611
			Inches	Feet	
Reclamation Depths		Topsoil	11.2	0.9	
		Subsoil	36.9	3.1	
		Profile	48.1	4.0	

1. Estimated topsoil salvage depths for map units A1, A2, and A3 are based on the average for soil profiles examined in March 2016 (Long 2016 in Appendix 2-5) and profiles within *Area 1 Expanded* which were examined during the *Order 2 Soil Survey of the North Private Lease* (Supplemental Volume 11). Estimated topsoil salvage depths for map units D thru K are based on estimated depths in Table 14 in the *Order 2 Soil Survey of the North Private Lease* (Supplemental Volume 11).
2. Estimated subsoil salvage depths for map units A1, A2, and A3 are based on the average for soil profiles examined in March 2016 (Long 2016 in Appendix 2-5) and profiles within *Area 1 Expanded* which were examined during the *Order 2 Soil Survey of the North Private Lease* (Supplemental Volume 11) . Estimated topsoil salvage depths for map units D thru K are based on estimated depths in Table 14 in the Order 2 Soil Survey of the North Private Lease (Supplemental Volume 11).
3. Measured map unit acres within Area 1 Expanded boundary.

232.200. Topsoil of Insufficient Quantity or Quality

Where the topsoil is of insufficient quantity or poor quality for sustaining vegetation, other materials approved by the DOGM in accordance with R645-301-233.100 will be removed as a separate layer from the area to be disturbed, and segregated.

Based on the Soil Survey, there should be sufficient quantities of topsoil to place an average of eight inches of topsoil across all reclaimed areas.

Based on the 2014 Soil Survey of the North Private Lease, there should be sufficient quantities of topsoil to place an average of 13 inches of topsoil across all reclaimed areas. The estimated replacement topsoil depths for each mining area are 18 inches in Mine Area 1, and 11 inches in Mine Area 2 (based on soil profiles examined within each mine area).

Appendix 2-4 details that the amount of undisturbed topsoil that will be salvaged in the Pit 10 Borrow Area and available for final reclamation will provide an approximate depth of 3.5 inches. In order to increase the volume of topsoil available for final reclamation, organic mulches will be incorporated into subsoil used for interim reclamation to develop it into cultivated topsoil when it is salvaged at the end of the interim reclamation phase. These operations are detailed in Appendix 2-4 called: *Topsoil and Subsoil Sources and Substitute Sources in the Pit 10 Borrow Area*.

The estimated salvage depths listed for topsoil and subsoil in *Area 1 Expanded* will provide an estimated 11.2 inches (0.9 feet) of topsoil and 36.9 inches (3.1 feet) of subsoil for a total estimated reclamation soil profile of 48.1 inches (4.0 feet).

Soil pH will be monitored in all subsoil salvaged below 58 inches (147 cm or 4.8 feet) in map unit G. Subsoil with pH greater than 8.8 will not be salvaged, stockpiled, or used for subsoil in the reclamation soil profile. Placement of subsoil within a pH range of 8.6 to 8.8 will be only be placed in the bottom foot (3 to 4 foot depth) of the reclamation soil profile.

232.300. Shallow Topsoil Handling

If topsoil is less than six inches thick, the operator may remove the topsoil and the unconsolidated materials immediately below the topsoil and treat the mixture as topsoil.

Sufficient quantities of topsoil are estimated to be available for replacement of an average eight inches of topsoil across reclamation, with a minimum of six inches. Therefore, mixing of topsoil with subsoil is not anticipated to be necessary.

The estimated topsoil salvage and replacement depths for each mine area are shown in the table in Section R-645-301-232.100.

Localized areas of Vessilla clayey taxadjunct in map unit L and Zigzag in map unit 10

may be less than 6 inches thick in the Pit 10 Borrow Area. Topsoil and subsoil will be stockpiled together as topsoil. Mixing of topsoil with subsoil is not anticipated to be necessary in other areas of the Pit 10 Borrow Area.

232.400 - 232.420. Topsoil Removal Exceptions

UDOGM will not require the removal of topsoil for minor disturbances which occur at the site of small structures, such as power poles, signs, or fence lines. Removal of topsoil will not be required when the disturbances will not destroy the existing vegetation and will not cause erosion.

232.500. Subsoil Segregation

The Coal Hollow Project plans to remove soils as either topsoil or subsoil based on the completed soil survey. DOGM may require that the B horizon, C horizon, or other underlying strata, or portions thereof, be removed and segregated, stockpiled, and redistributed as subsoil in accordance with the requirements of R645-301-234 and R645-301-242 if it finds that such subsoil layers are necessary to comply with the revegetation requirements of R645-301-353 through R645-301-357.

Refer to Table 4-2 in Appendix 2-1, which contains estimated subsoil salvage depths. In addition, substitute subsoil has been identified in the layers between the identified topsoil layer and the Tropic Shale. Sufficient quantities of this material are available to live haul most of the subsoil with the exception of one stockpile that will be constructed from the initial mining area and reserved for reclamation of the final mining area and one temporary stockpile that will be constructed from removal of the NW/4, NE/4, Section 30. All substitute subsoil materials will be sampled and tested for pH, conductivity, SAR, percent lime, and texture, prior to salvage and stockpiling.

Refer to Appendix 2-4 for a summary of the amount of available subsoil, salvage depths, replacement, potential substitute subsoil needs, and potential sources of substitute subsoil in the Pit 10 Borrow Area. Sampling of the final graded overburden surface and the substitute subsoil source is described in Appendix 2-4. Table 2-4.14 summarizes the estimated amount of subsoil available for reclamation of the Pit 10 Borrow Area.

Refer to Table 14 in Volume 11: Supplemental Report section of the MRP in the report called: *Order 2 Soil Survey for the North Private Lease Expansion of the Coal Hollow Mine* (November 2014) for subsoil salvage depths. The estimated average subsoil salvage and replacement depths for each mine area is listed in the table in Section R-645-301-232.100.

The majority of the soils in the North Private lease were sampled to 8 feet or bedrock. The soil analysis results can be seen in Appendix C of Volume 11: Supplemental Report section of the MRP in the report called: *Order 2 Soil Survey for the North Private Lease Expansion of the Coal Hollow Mine* (November 2014). Additional testing of substitute subsoil materials will be completed at the time of final reclamation by following the procedure outlined in R645-301-232.700. Analysis of substitute subsoil will include parameters

listed in Tables 3 and 7 in the *Guidelines for Management of Topsoil and Overburden*.

The following soil sampling program will be conducted during the initial mining process in the Coal Hollow Mine and does not apply to the North Primate Lease area:

- Topsoil: Sampling will occur every 2 to 4 acres or approximately every 2,500 to 5,000 bank cubic yards.
- Subsoil: Sampling will occur every 2 to 3 acres or approximately every 10,000 to 15,000 bank cubic yards.

These samples are anticipated to be composites of individual samples taken throughout the week during the time frames that topsoil and subsoil are being salvaged. These individual samples would be taken five days a week and composited to a single sample representing the material moved each week. The parameters that will be analyzed for topsoil are found in Table 4-1 of Appendix 2-1.

Following the initial mining process (approximately 1 year), the sampling program was reviewed to determine the appropriate level of sampling necessary to ensure adequacy of topsoil and subsoil used in reclamation for all subsequent mining. It was determined that areas in the North or South Private Lease that exhibited a surface accumulation of salts after being placed, will be tested for elevated SAR ratio, this information will be reported with the topsoil sampling.

232.600. Timing

All material to be removed under R645-301-232 will be removed after the vegetative cover that would interfere with its salvage is cleared from the area to be disturbed, but before any drilling, blasting, mining, or other surface disturbance takes place. Drawing 2-2 shows the anticipated topsoil removal sequence and stockpiling.

Drawing 2-4 shows the anticipated topsoil removal sequence and stockpiling for the North Private Lease. Estimated average topsoil and subsoil salvage depths in the North Private Lease are detained in Soils map 10 in Volume 11: Supplemental Report section of the MRP in the report called: *Order 2 Soil Survey for the North Private Lease Expansion of the Coal Hollow Mine* (November 2014).

Figure 2-4.1 in Appendix 2-4 called: *Topsoil and Subsoil Sources and Substitute Sources in the Pit 10 Borrow Area* details topsoil and subsoil salvage areas for the Pit 10 Borrow Area.

232.700. Topsoil & Subsoil Removal Under Adverse Conditions

An exception to the requirements of R645-301-232 to remove topsoil or subsoils in a separate layer from an area to be disturbed by surface operations may be granted by UDOGM where the operator can demonstrate;

232.710. Unsafe Conditions

The removal of soils in a separate layer from the area by the use of conventional machines would be unsafe or impractical because of the slope or other conditions of the terrain or because of the rockiness or limited depth of the soils.

These conditions are not anticipated in the Coal Hollow project area.

232.720. Lack of On-Site Material Available

If the requirements of R645-301-233 have been or will be fulfilled with regard to the use of substitute soil materials unless no available substitute material can be made suitable for achieving the revegetation standards of R645-301-356, then the operator will, as a condition of the permit, be required to import soil material of the quality and quantity necessary to achieve such revegetation standards.

The soil survey indicates that there are sufficient quantities of topsoil and subsoil to adequately reclaim the mined area with 48 inches of combined cover. If additional materials are needed, then Alton Coal Development (ACD) will salvage suitable overburden for use as substitute subsoil material from the zone below the topsoil layer (8 inches thick average) to a maximum depth of 30 feet, excluding any Tropic shale materials. ACD will do additional sampling to identify the zones in which suitable materials occur for maximum salvage potential of substitute subsoil. Representative overburden samples will be analyzed for pH, conductivity, SAR, percent lime, and texture. A detailed description of subsoil sampling is provided in Section 232.500.

The estimated combined salvage depths for each soil map unit are listed in Table 14 in Volume 11: Supplemental Report section of the MRP in the report called: *Order 2 Soil Survey for the North Private Lease Expansion of the Coal Hollow Mine* (November 2014). The table in Section R-645-301-232.100 details the estimated average depths of topsoil, subsoil, and substitute subsoil that will be salvaged and replaced in each mine area.

There are sufficient sources of native subsoil in adjacent soil map units to provide adequate amounts of native subsoil to cover mined area 2 of the North Private Lease with a minimum 48 inches of combined cover.

Mine Area 1 may require an additional 4 inches and Mine Area 1 extended an additional 2 inches of substitute subsoil in order to achieve suitable material within the root zone. Also, for Mine Area 2 that will see more live haul, to ensure all areas achieve suitable material within the root zone, the following procedure will be followed. After backfill of the overburden has been complete, the upper 8 inches of Tropic Shale will be sampled on a basis of one sample per 2.5 acres as depicted in Drawing 5-76A. Sample locations will be recorded with a GPS. Tropic Shale samples will be analyzed for the parameters listed in Tables 3 and 7 in the *Guidelines for Management of Topsoil and Subsoil* (Utah DOGM). Should a sample analysis indicate

backfilled Tropic Shale are poor or unacceptable, samples will be taken half the distance between the unsuitable sample and the surrounding samples to delineate the extent of the unsuitable soil. Additional suitable subsoil or subsoil substitute will be placed over the delineated area to provide 48" of reclamation soil profile, as needed.

Subsoil will be used as interim reclamation cover for the Pit 10 Borrow Area. Organic mulches will be incorporated to improve fertility and soil quality, as detailed in R645-301-244.200. This improved subsoil will be salvaged and stockpiled as cultivated topsoil at the end of the interim reclamation phase of the Pit 10 Borrow Area project. Cultivated topsoil will be used as topsoil during reclamation of the Pit 10 Borrow Area. This operation is described in more detail in Appendix 2-4 called: *Topsoil and Subsoil Sources and Substitute Sources in the Pit 10 Borrow Area*. Salvage and stockpiling of the cultivated topsoil will be monitored by a Certified Professional Soil Scientist.

233.100 - 400 Topsoil Substitutes and Supplements.

Based on the Soil Survey contained in Appendix 2-1, topsoil substitutes and supplements are not anticipated to be necessary. This survey estimates that nine inches of topsoil can be replaced across the reclamation area.

Based on the Soil Survey, topsoil substitutes and supplements are not anticipated to be necessary. The North Private Lease soil survey estimates that thirteen inches of topsoil can be place over the entire mined area. Table 14 in Volume 11: Supplemental Report section of the MRP in the report called: *Order 2 Soil Survey for the North Private Lease Expansion of the Coal Hollow Mine* (November 2014) details the estimated depth of topsoil that can be salvaged from each soil map unit. The estimated average topsoil depth for soil map unit and J are 7 inches or less. However, the overall survey area estimated average topsoil salvage depth of approximately 13 inches. The estimated replacement topsoil depths for each mining area are 18 inches in Mine Area 1and 11 inches in Mine Area 2 (based on soil profiles examined within each mine area).

Subsoil will be used as interim reclamation cover for the Pit 10 Borrow Area. Organic mulches will be incorporated to improve fertility and soil quality, as detailed in R645-301-244.200. This improved subsoil will be salvaged and stockpiled as cultivated topsoil at the end of the interim reclamation phase of the Pit 10 Borrow Area project. Cultivated topsoil will be used as topsoil during reclamation of the Pit 10 Borrow Area. This operation is described in more detail in Appendix 2-4 called: *Topsoil and Subsoil Sources and Substitute Sources in the Pit 10 Borrow Area*. Salvage and stockpiling of the cultivated topsoil will be monitored by a Certified Professional Soil Scientist.

The cultivated topsoil will be sampled and tested prior to salvage. Samples will be collected on the basis of approximately one sample per 2.5 acres. Sampling depth will be to 4 feet. This testing will include all parameters listed in Tables 3 and 7 in *Guidelines for Management of Topsoil and Overburden* (DOGM January 2008). Suitability will be evaluated based on the laboratory analysis and parameter limits listed in Tables 4 and 8 in *Guidelines for Management of Topsoil and Overburden*

(DOGM January 2008).

The following intermediate seed mix will be used to establish vegetation on the intermediate reclamation area in the Pit 10 Borrow where cultivated topsoil will be developed from subsoil. The Sweetpea milkvetch and alfalfa are legumes included for nitrogen fixation.

Intermediate Reclamation Seed Mix for Topsoil Cultivation Area			
		Seeds/Ft^2	Rate (PLS/Acre)
Astragalus cicer	Sweetpea milkvetch	9.99	3.00
Bromus carinatus	Mountain Brome	11.48	5.00
Elymus lanceolatus	Thickspike wheatgrass	10.61	3.00
Elymus smithii	Western wheatgrass	11.57	4.00
Elymus spicatus	Bluebunch wheatgrass	12.86	4.00
Medicago sativa	Alfalfa	14.46	3.00
Poa pratensis	Kentucky bluegrass	14.99	0.30
TOTAL		**85.96**	**22.30**

In the event that additional topsoil is needed to complete the required 48-inch reclamation profile, areas of interim reclamation have been identified as "Potential Topsoil" on drawing 2-2 that contain suitable topsoil. These areas potentially contain one foot of topsoil and have been accounted for on the soils accounting contained on drawing 2-2.

234. Topsoil Storage

234.100. Stockpiles

Materials removed under R645-301-232.100, R645-301-232.200, and R645-301-232.300 will be segregated and stockpiled when it is impractical to redistribute such materials promptly on regraded areas. Drawing 2-2 shows the planned stockpile areas, anticipated storage time, quantities and size.

Drawing 2-4 shows the planned stockpile areas, anticipated storage time, quantities and size for the North Private Lease.

Planned stockpile areas and quantities for the Pit 10 Borrow Area are shown on Drawing 2-2.

234.200. Requirements of Stockpiles

Stockpiled materials will be subject to the following conditions.

234.210. (a) They will be selectively placed on a stable site within the permit area. Areas are shown on Drawing 2-2.

Stockpile areas in the North Private Lease are shown on Drawing 2-4.

Stockpile areas for topsoil and subsoil salvaged from Pit B1 are shown on Drawing 2-2.

234.220. (b) They will be protected from contaminants and unnecessary compaction that would interfere with revegetation.

234.230. (c) They will be protected from wind and water erosion through prompt establishment and maintenance of an effective, quick growing vegetative cover. The side slopes will be graded to a maximum 3h:1v. Drawing 2-2 shows the planned stockpile areas, anticipated storage time, quantities and size. Drawing 2-4 shows the planned stockpile areas, anticipated storage time, quantities and size for the North Private Lease. Drawing 2-2 shows the planned stockpile areas, anticipated storage time, quantities and size for the Pit 10 Borrow Area. The interim seed mix for all the stockpiles is the following:

Stockpile Interim Seed Mix		
		Rate (PLS/Acre)
Bromus carinatus	Mountain Brome	6
Elymus lanceolatus	Thickspike wheatgrass	4
Elymus smithii	Western wheatgrass	5
Elymus spicatus	Bluebunch wheatgrass	6
Poa pratensis	Kentucky bluegrass	0.4
Total		**21.40**

Partially utilized stockpiles of topsoil, subsoil, and substitute subsoil will be reshaped and bermed within a reasonable time period following the end of use. The disturbance will be seeded during the next appropriate seeding period or by November 30th of that year. If the season is not appropriate for seeding after reshaping, the stockpile will then be coated with a tackifier at the manufacturer's suggested rate for dust control applications.

The following example balance sheet will be used to track salvage, stockpiling, and placement of topsoil, subsoil, and substitute subsoil in each mine area. Tracking of topsoil, subsoil, and substitute subsoil will be done for each Mine Area separately. The depth of topsoil and subsoil salvage will be determined by the soil survey and in the field during mining by the Coal Hollow environmental technician in consultation with a certified professional soil scientist.

NPL AREA 1	Topsoil Stockpile	Subsoil Stockpile
Starting Stockpile Volume	74,953	41,378

BRP 1-10 = 12.21 ACRES

Source	NL Topsoil	Livehaul Topsoil*	Total Topsoil	NL Subsoil	Livehaul Subsoil	Total Subsoil	
	CY	CY	CY	CY	CY	CY	CY
Stockpile volume utilized	18,784	0	18,784	14,071	8,459	22,530	
Suitable spoil**							33,283
Remaining stockpile volume	56,169			27,307			

*Livehaul source: Area 1

**Suitable Spoil: Surface two feet of 9.38 acres represented by Soil Sample Pits 1, 2, and 3.5N

***Average topsoil cover depth 1.08 ft.

****Subsoil redistribution depth as shown on Drawing 5-76a

For the purpose of tracking soil balance in the Coal Hollow Mine, Figure 1with the addition of Table 1 of Appendix 2-2 has been revised to show soil placed in reclamation, topsoil sampled for fertility and includes a table indicating the soil remaining/planned in stockpiles including new stockpile address in Appendix 2-4 (Pit 10 Borrow amendment). As sampling and placement of soils progresses with reclamation, Figure 1 and Table 1of Appendix 2-2 will be updated with new information.

234.240. (d) They will not be moved until required for redistribution unless approved by the UDOGM. Anticipated storage time for each stockpile is shown on Drawing 2-2.

Drawing 2-4 shows the anticipated storage time for each stockpile in the North Private Lease. A portion of the topsoil stockpile in Area 1 will be relocated prior to mining Pit 11, ACD will notify the Division of the volume of stored topsoil to be moved and the timing for this movement.

Drawing 2-2 shows the anticipated storage time for each stockpile in the Pit 10 Borrow Area.

234.300. Long-Term Disturbance & Stockpiling

When long-term disturbed areas will result from facilities and preparation plants and when stockpiling of materials removed under 8645-301-232.100 would be detrimental to the quality or quantity of those materials, DOGM may approve the temporary distribution of the soil materials removed to an approved site within the permit area to enhance the current use of that site until later when needed for reclamation, provided that the following conditions occur.

234.310. Such action will not permanently diminish the capability of the topsoil of the host site.

234.320. The material will be retained in a condition more suitable for redistribution than if stockpiled.

240. Reclamation Plan (General Requirements)

A detailed Order 2 soil survey has been completed in 2006 and 2007 and extended to include the New Dame Lease IBC in 2014. This information provides detail for onsite soil suitability, salvage depths, and volumes available for reclamation of the mine site. Dozers or Scrapers will replace the subsoil and topsoil. The topsoil is estimated to average 8 inches and the subsoil will be approximately 39 inches in thickness. The total profile of topsoil and subsoil is estimated to average 48 inches.

A detailed Order 2 soil survey of the North Private Lease was completed in 2014 and is detailed in Volume 11: Supplemental Report section of the MRP in the report called: *Order 2 Soil Survey for the North Private Lease Expansion of the Coal Hollow Mine* (November 2014). This information provides detail for onsite soil suitability, salvage depths, and volumes available for reclamation of the mine site. Dozers or Scrapers will replace the subsoil and topsoil. The topsoil is estimated to average 13 inches and the subsoil will be approximately 31 inches in thickness. The total profile of topsoil and subsoil is estimated to average 44 inches.

A detailed Order 2 soil survey of the Pit 10 Borrow Area was completed in 2016 and is detailed in Appendix 2-4: *Topsoil and Subsoil Sources and Substitute Subsoil source in the Pit 10 Borrow Area* (September 2016). This information provides details for onsite soil suitability, salvage depths, and volumes available for reclamation of the mine site. Dozers or Scrapers will replace the subsoil and topsoil. The minimum final cover depths in the Pit 10 Borrow Area will be approximately 0.9 feet of topsoil and 3.1 feet of subsoil. The total reclamation profile of topsoil and subsoil is estimated to average 4.0 feet.

If soils balance information should indicate that less than 48 inches of soil is available for the total reclamation profile, the following plan will be implemented. After backfill of the overburden has been complete, the upper 8 inches of Tropic Shale will be sampled on a basis of one sample per 2.5 acres. Sample locations will be recorded with a GPS. Tropic Shale samples will be analyzed for the parameters listed in Tables 3 and 7 in the *Guidelines for Management of Topsoil and Subsoil* (Utah DOGM). Should a sample

analysis indicate backfilled Tropic Shale are poor or unacceptable, samples will be taken half the distance between the unsuitable sample and the surrounding samples to delineate the extent of the unsuitable soil. Additional suitable subsoil or subsoil substitute will be placed over the delineated area to provide 48" of reclamation soil profile, as needed.

241. General Requirements

Refer to R-645-301-242 for redistribution of soils, R-645-301-243 for soil nutrients and amendments, and R-645-301-244 for mulch use and application.

242. Soil Redistribution

242.100. Topsoil materials removed under R645-301-232.100, R645-301-232.200, and R645-301-232.300 and stored under R645-30I-234 will be redistributed in a manner that meets the following conditions.

242.110. (a) The material achieves an approximately uniform, stable thickness consistent with the approved postmining land use, contours, and surface-water drainage systems. All slopes will be appropriately graded and leveled prior to placement of topsoil and subsoil layers. Soil layer thicknesses will be regularly checked using a high precision GPS system and spot checking by the ACD environmental technician.

242.120. (b) Reduced material handling of the soil resource prevents excess compaction. Material handling will be minimized by direct hauling and placing materials when operationally practical rather than stockpiling. Materials will be spread by a dozer or scrapers and spread only as much as necessary to obtain the required uniform thickness. Traffic from rubber tired equipment across topsoil and subsoil will be minimized.

If heavy equipment operation results in excessive soil compaction at the surface of the reclaimed areas, they will then be ripped, disked, and harrowed to loosen the seedbed prior to seeding. Excessive compaction that could impact seeding success will be determined by observation and judgment of an environmental professional. In other areas where less compaction has occurred, the areas will be disked and harrowed. The disking and harrowing of all areas will be done parallel with the contour wherever possible to decrease the potential for water erosion downslope. In other areas where compaction is not a problem, dozer tracking can be used to roughen the surface, and to trap seed, fertilizer, mulch, and other amendments as well as decrease erosion by wind and water. In such cases seeding will be done immediately after this treatment, whereas soil amendments, where required, would be applied over the surface during seedbed preparations. Seeding will mainly occur in the early spring and late fall. Seeding will be accomplished by the seed drilling method followed by mulching as described in Section 244.200. Seed mixtures and rates can be viewed in Tables 3-37 through 3-42 in Chapter 3, Volume 2.

242.130. (c) Handling procedures will be implemented to protect the materials from wind and water erosion before and after seeding and planting.

Reclamation will be graded to the planned slope angles, not to exceed 3h:1v. Soil layers will be sloped as the material is relocated to the reclaim areas. Once soil is placed, seeding will occur at the earliest appropriate season suitable to planting conditions. If the season is not appropriate for seeding at the time of topsoil placement, the topsoil will then be coated with a tackifier at the manufacturer's suggested rate for dust control applications. Mulching will be implemented on all reclamation to control erosion following seeding.

242.200. Treatments of Material to be Redistributed

Before redistribution of the materials removed under R645-301-232, the regraded land will be treated if necessary to reduce potential slippage of the redistributed material and to promote root penetration. If no harm will be caused to the redistributed material and reestablished vegetation, such treatment may be conducted after the material is replaced. Potential for slippage is anticipated to be minimal based on the planned slope angles for reclamation.

In the North Private Lease, areas exceeding 3:1 slope, will have the underlying spoil ripped to a depth of 18" prior to placement of subsoil and the placed subsoil will be also be ripped to a depth of 18" prior to placement of topsoil. In all areas where the subsoil has become compacted, the subsoil will be ripped to a depth of 18" prior to placement of the topsoil.

When subsoil placement is not immediately followed by topsoil placement (within a month), the graded subsoil will be treated with mulch or tackifier (per Section 244.200) to prevent erosion in the interim; and the subsoil will be ripped to a depth of 18 inches prior to topsoil placement.

Area 2 encounters Prime Farmland and Soils of Statewide Importance, these are required to be stockpiled by owner and by horizon. The location of these stockpiles can be found on Drawing 2-4. DRH_C, DRH_B, OGP_B, and OGP_A will be on top of an area that has been previously been top soiled and seeded. The remaining stockpiles will be placed on subsoil. All stockpiles from the Prime Farmland and Soils of Statewide Importance weather placed on previously top soiled or subsoiled areas, will be placed on a layer of organic material to demarcate the separation at the time they are replaced in reclamation of the Prime Farmland and Soils of Statewide Importance areas. Those that are placed on topsoil will have the topsoil in the travel paths windrowed to a berm which also will be seeded until final placement. Once the stockpiles on top soil are removed, the area of the stockpile and associated travel paths will require ripping 18" prior to being reseeded.

242.300. Soil Redistribution on Impoundments & Roads

DOGM may not require the redistribution of topsoil or topsoil substitutes on the approved postmining embankments of permanent impoundments or roads if it determines the following.

242.310. (a) Placement of topsoil or topsoil substitutes on such embankments is

inconsistent with the requirement to use the best technology currently available to prevent sedimentation.

242.320. (b) Such embankments will be otherwise stabilized.

243. Soil Nutrients & Amendments

Nutrients and soil amendments will be applied to the redistributed material when necessary to establish the vegetative cover. The final seedbed of the reclaimed areas will be prepared by first replacing the subsoil and topsoil. Next, a basic topsoil (top 8 inches of reclamation profile) sampling regime will be implemented prior to seeding that should identify fertility problems and will provide a basis for determining necessary soil amendments. The parameters analyzed will be:

Available phosphorus (P)
Soluble Potassium (K)
Nitrate-Nitrogen

One composite sample will be collected from approximately every 2 acres based on soil types and variability. Each composite will be comprised of at least 4 sub-samples. This sampling will be completed within three months of topsoil placement.

Pre-testing of the soils has been conducted as part of the soils survey. Results from the pre-testing of topsoil and subsoil can be viewed in Table C-1 of Appendix 2-1 (native topsoil and subsoil) and Table C-2 (samples from core hole/overburden pits) of Appendix 2-1.

Results from the pre-testing of topsoil and subsoil can be seen in the laboratory analysis reports in Appendix C in Volume 11: Supplemental Report section of the MRP in the report called: *Order 2 Soil Survey for the North Private Lease Expansion of the Coal Hollow Mine* (November 2014).

Results from the pre-testing of topsoil and subsoil in the Pit 10 Borrow Area are in the laboratory analysis reports in Appendix 2-4: *Topsoil and Subsoil Sources and Substitute Subsoil source in the Pit 10 Borrow Area* (September 2016).

244. Soil Stabilization

244.100. Erosion Protection from Wind & Water

All exposed surface areas will be protected and stabilized to effectively control erosion and air pollution attendant to erosion. Reclamation will be regraded to the planned slope angles, not to exceed 3h:1v. Soil layers will be sloped as the material is relocated to the reclaim areas. Once soil is placed, seeding will occur at the earliest appropriate season suitable to planting conditions. Grass matting, mulching and/or cross ditches will be implemented as necessary to control erosion. Surfaces of stockpiles will be roughened by pocking, gouging or ripping. Soil stockpiles will be seeded with the temporary seed mix provided in Section 234.230 and mulched

by one of the methods described in Section 244.200.

Stockpiles of topsoil, subsoil, and substitute subsoil will be shaped, roughened, and bermed immediately following construction. The disturbance will be seeded during the next appropriate seeding period as described in the reclamation time table in Chapter 3 section 341.100. If the season is not appropriate for seeding the stockpile will be coated with a tackifier at the manufacturer's suggested rate for dust control applications.

The sideslopes of the temporary spoil pile will be roughened and coated with a tackifier at the manufacturer's recommended rate as the pile rises.

244.200. Mulch

Suitable mulch and other soil stabilizing practices will be used on all areas that have been regraded and covered by topsoil or topsoil substitutes. DOGM may waive this requirement if seasonal, soil, or slope factors result in a condition where mulch and other soil stabilizing practices are not necessary to control erosion and to promptly establish an effective vegetative cover.

Mulch will be placed on the seedbed surface once soil amendments have been incorporated. In most cases seeding will be accomplished after straw mulch has been placed to ensure seed is placed at the proper depth, exceptions would be for safety on steep slopes. Mulching treatments will occur by one or more of the following methods:

- Certified noxious weed free straw applied at a rate of 1 ton/acre anchored by crimping or a chemical binder.

- Wood fiber hydromulch at a rate of ¾ ton per acre for slopes flatter than 3:1 and 1 ton per acre for slopes at 3:1 which is the steepest slope planned at the project. This hydromulch would be anchored with a chemical binder at the manufacturer's suggested rate.

- Live mulch by use of quick growing sterile nurse crop such as "Quick Guard" with recommended rates of 5-10 lbs. /acre.

- The use of Nutri-Mulch® or equivalent product as an organic matter amendment and fertilizer. Application rate will be as recommended by the manufacturer.

The mulch should control erosion by wind and water, decrease evaporation and seed predation, and increase survivability of the seeded species. Since there is only one post mining land use, mulching will follow one of the above described methods for all reclaim areas. Although live mulch ("Quick Gard") has performed the best at the Coal Hollow Mine, other methods or combinations of the above listed methods will be used based on slope, climatic trends, soil moisture, soil texture, etc. and will be determined at the time of planting for each area.

244.300. Rills & Gullies

Rills and gullies that form in areas that have been regraded and topsoiled that cause the following conditions will have the topsoil replaced followed by reseeding or replanting if the following occurs.

244.310. (a) If they disrupt the approved postmining land use or the reestablishment of the vegetative cover.

244.320. (b) If they cause or contribute to a violation of water quality standards for receiving streams will be filled, regraded, or otherwise stabilized; topsoil will be replaced; and the areas will be reseeded or planted.

250. PERFORMANCE STANDARDS

251.Topsoil & Subsoil Removed

All topsoil, subsoil and topsoil substitutes or supplements will be removed, maintained and redistributed according to the plan given under R645-301-230 and R645-301-240.

252.Topsoil & Subsoil Stockpiled

All stockpiled topsoil, subsoil and topsoil substitutes or supplements will be located, maintained and redistributed according to plans given under R645-301-230 and R645-301-240.

TABLE OF CONTENTS

Chapter 5

R645-301-500

Engineering

510.	**INTRODUCTION**	5-1
511	General Requirements	5-1
511.100–300.	Contents	5-1
512	**CERTIFICATION**	5-1
512.100.	Cross Sections and Drawings	5-1
512.200.	Plans and Engineering Designs	5-1
512.210 –230.	Excess Spoil Disposal Areas, Durable Rock Fills and Coal Mine Waste	5-2
512.240.	Impoundments	5-2
512.250.	Primary Roads	5-2
512.260.	Variance From Approximate Original Contour	5-3
513.	**COMPLIANCE WITH MSHA REGULATIONS AND MSHA APPROVALS**	5-3
513.100.	Coal Processing Waste Dams and Embankments	5-3
513.200.	Impoundments and Sedimentation Ponds	5-3
513.300.	Disposal of Underground Development Waste, Coal Processing Waste and Excess Spoil in Underground Mine Workings	5-3
513.400.	Refuse Piles	5-3
513.500.	Capping, Sealing and Backfilling Openings to the Surface from the Underground	5-3
513.600.	Discharges into an Underground Mine	5-5
513.800.	Coal Mine Waste Fires	5-6
514.	**INSPECTIONS**	5-6
514.100-140.	Excess Spoil	5-6
514.200-250.	Refuse Piles	5-7
514.300.	Impoundments	5-7
514.310-313.	Certified Inspection	5-7
514.320.	Inspection Standard and Frequency	5-7
515	**REPORTING AND EMERGENCY PROCEDURES**	5-8
515.100.	Slides	5-8
515.200.	Impoundment Hazards	5-8
515.300-320.	Temporary Cessation	5-8
516	**PREVENTION OF SLIDES**	5-9

520	**OPERATION PLAN**	5-10
521	**GENERAL**	5-10
521.100.	Cross-Sections and Drawings	5-10
521.110.	Previously Mined Areas	5-10
521.120.	Existing Surface and Subsurface Facilities and Features	5-11
521.121.	Buildings	5-11
521.122.	Surface and Subsurface Man-Made Features	5-11
521.123.	Public Roads	5-11
521.124.	Existing areas of spoil, waste, coal development waste, and non-coal waste disposals, dams, embankments, other impoundments, and water treatment and air pollution control facilities	5-11
521.125.	Ponds and Other Impoundments	5-12
521.130.	Landowners and Right of Entry and Public Interest Drawings	5-12
521.132	Permit Boundary	5-12
521.133	Public Roads	5-12
521.133.2	Relocating a Public Road	5-13
521.140.	Mine Drawings and Permit Area Drawings	5-13
521.143.	Disposal of Excess Spoil	5-15
521.150.	Land Surface Configuration Drawings	5-20
521.160.	Drawings and Cross Sections of the Proposed Features for the Proposed Permit Area	5-21
521.170.	Transportation Facilities Drawings	5-23
521.180.	Support Facilities	5-26
521.200.	Signs and Markers Specifications	5-26
521.240.	Mine and Permit Identification Signs	5-26
521.250.	Perimeter Markers	5-27
521.260.	Buffer Zone Markers	5-27
521.270.	Topsoil Markers	5-27
522	**COAL RECOVERY**	5-27
523	**MINING METHODS**	5-30
524	**BLASTING AND EXPLOSIVES**	5-35
524.100	Blaster Certification	5-35
524.300-350	Preblasting Survey	5-36
524.400.	Blasting Schedule	5-37
524.410.	Unscheduled Blasts	5-38
524.420.	Timing of Blasting	5-38
524.450-453.	Blasting Schedule Publication and Distribution	5-38
524.460-465.	Blasting Schedule Contents	5-38
524.500-532.	Blasting and Warning Signs, Access Control	5-39
524.600-610.	Adverse Effects of Blasting	5-40
524.620.	Airblast Limits	5-40
524.630.	Monitoring	5-40
524.633.	Flyrock	5-41

524.640-622.	Ground Vibration	5-41
524.690.	Standards not Applicable	5-42
524.700.	Records of Blasting Operations	5-42
524.800.	Use of Explosives	5-43
525.	**SUBSIDENCE CONTROL PLAN**	5-43
526.	**MINING FACILITIES**	5-44
526.110-115.	Existing Structures	5-44
526.116.	Public Roads	5-44
526.116.1.	Operations Within 100 ft. of a Public Road	5-44
526.116.2.	Relocating a Public Road	5-45
526.200.	Utility Installation and Support Facilities	5-46
526.210.	Existing Utilities	5-46
526.220	Support Facilities	5-46
526.300	Water Pollution Control Facilities	5-49
526.400	Air Pollution Control Facilities	5-50
527.	**TRANSPORTATION FACILITIES**	5-50
527.100.	Classification of Roads	5-50
527.200.	Description of Roads	5-51
527.220.	Alteration or Relocation of Natural Drainage ways	5-55
527.230.	Road Maintenance	5-55
527.250.	Geotechnical Analysis	5-55
528.	**HANDLING AND DISPOSAL OF COAL, OVERBURDEN, EXCESS SPOIL, AND COAL MINE WASTE**	5-56
528.100.	Coal Removal, Handling, Storage, Cleaning, and Transportation Areas and Structures	5-56
528.200.	Overburden	5-56
528.300.	Spoil, Coal Processing Waste, Mine Development Waste, and Non-coal Waste Removal, Handling, Storage, Transportation, and Disposal Areas and Structures	5-59
528.310.	Excess Spoil	5-59
528.320.	Coal Mine Waste	5-63
528.322.	Refuse Piles	5-64
528.323.	Burning and Burned Waste Utilization	5-64
528.330.	Non-coal Mine Waste	5-64
528.350.	Acid-Forming and Toxic Materials	5-65
528.400.	Dams, Embankments and other Impoundments	5-65
529.	**MANAGEMENT OF MINE OPENINGS**	5-65
530.	**OPERATIONAL DESIGN CRITERIA AND PLANS**	5-67
531.	**GENERAL**	5-67

532.	**SEDIMENT CONTROL**	5-68
532.100	Disturbed Area	5-68
532.200	Backfill Stabilization	5-68
533-100-714.	**IMPOUNDMENTS**	5-69
534	**ROADS**	5-72
534.100-200.	Roads will be located, designed, constructed, reconstructed, used maintained, and reclaimed so as to:	5-72
534.300-340.	Primary Roads	5-74
535.	**SPOIL**	5-75
535.100.	Disposal of Excess Spoil	5-75
535.200.	Disposal of Excess Spoil: Valley Fills/Head-of-Hollow Fills	5-78
535.300.	Disposal of Excess Spoil: Durable Rock Fills	5-78
535.400.	Disposal of Excess Spoil: Preexisting Benches	5-79
536.	**COAL MINE WASTE**	5-79
537.	**REGRADED SLOPES**	5-79
540.	**RECLAMATION PLAN**	5-79
541.100-400.	General	5-79
542.	**NARRATIVE, DRAWINGS AND PLANS**	5-81
542.100–600.	Plan and Timetable	5-81
542.700.	Final Abandonment of Mine Openings	5-85
542.720.	Disposal of Excess Spoil	5-86
542.730.	Disposal of Coal Mine Waste	5-87
542.740.	Disposal of Non-coal Mine Wastes	5-87
542.800	Reclamation Cost	5-87
550.	**RECLAMATION DESIGN CRITERIA AND PLANS**	5-88
551	**SEALING AND CASING OF UNDERGROUND OPENINGS**	5-88
552	**PERMANENT FEATURES**	5-89
553	**BACKFILLING AND GRADING**	5-89
553.200	Spoil and Waste	5-95
553. 300	Covering of Exposed Coal Seams, and Acid and Toxic-Forming	5-95
553.400	Cut and Fill Terraces	5-95
533.500	Previously Mined Areas and Continuously Mined Areas	5-95
553.600	Highwall Management	5-95
553.700	Backfilling and Grading: Thin Overburden	5-96
553.800	Backfilling and Grading: Thick Overburden	5-96

APPENDICES

5-1	Geotechnical Analysis - Sediment Impoundments and Excess Spoil Structure
5-2	Sediment Impoundment and Diversion Structure Analysis
5-3	Robinson Creek Culvert and Diversion Analysis
5-4	Coal Hollow Mine Blasting Plan
5-5	Reclamation Slope Stability Evaluation/Analysis
5-6	Post-Mining Roads Backfill Analysis
5-7	Location of & Standards and Specifications for ASCAs and ASCMs in use at Coal Hollow Mine
5-8	Feasibility of Highwall Mining the Smirl Seam at the Alton Coal Development, LLC Coal Hollow Mine
5-9	Norwest Corporation Underground Letter Reports
5-10	Engineering Evaluation of Lower Robinson Creek Reconstruction
5-11	Geotechnical Analysis – Sediment Impoundments and Spoils Structures – North Private Lease
5-12	Hydrology and Runoff Control for the North Lease Area Coal Hollow Mine
5-12A	Hydrology and Runoff Control for Temporary Sediment Pond T1 North Lease Area Coal Hollow Mine
5-13	~~Evaluation of Pipeline from Pit 10 to Sediment Pond 3~~Not Used
5-14	Culvert Design for C-2 North Private Lease

DRAWINGS

General

5-1	Pre-mining Topography
5-2	Disturbance Sequence

Facilities (5-3 to 5-8C)

5-3	Facilities and Structures Layout
5-3A	Culverts
~~5-3B~~	~~Underground Facilities and Structures Layout~~
~~5-3C~~	~~Underground Facilities & Structures – Design Layout~~
~~5-3D~~	~~Underground Facilities & Structures - Watersheds~~
5-4	Loadout Elevation View 1
5-5	Loadout/Stockpile Elevation View 2
5-6	Office Elevation View
5-7	Maintenance Shop Elevation View
5-8	Wash Bay, Oil and Fuel Storage Elevation View
5-8A	Wash Bay Equipment Layout
5-8B	Facilities and Structural – Electrical
5-8C	Facilities and Structural – Water Plan

Coal Recovery (5-9 to 5-14)

5-9	Coal Extraction Overview
5-10	Coal Removal Sequence

5-11 Shallow Coal Recovery Cover Cross Section
5-12 Deep Coal Recovery Cross Section
5-13 Strip Ratio Isopach
5-14 Coal Thickness Isopach

Overburden Handling (5-15 to 5-19)
5-15 Overburden Isopach
5-16 Overburden Removal Sequence
5-17 Overburden Removal Ultimate Disturbance
5-18 Bond Sequence
5-19 Bond Polygons

Robinson Creek Temporary Diversion and Reconstruction (5-20 to 5-21)
5-20 Robinson Creek Temporary Diversion Plan View
5-20A Robinson Creek Reconstruction Plan View
5-21 Robinson Creek Temporary Diversion Cross Sections/Detail
5-21A Robinson Creek Reconstruction Design and Details

Transportation (5-22 to 5-24)
5-22 Primary Mine Haul Roads Plan View
5-22A Primary Roadways – Facilities Roadways
5-22B Primary Roadways – Facilities Roadways
5-22C Postmining Roadways – Roadway to Pugh Property
5-22D Postmining Roadways – Roadway to Water Well
5-22E Postmining Roadways – Route 136 Reconstruction Details Option B
5-22F Postmining Roadways – Route 136 Reconstruction Details
5-22G Postmining Roadways – Route 136 Reconstruction Details
5-22H Postmining Roadways – Route 136 Reconstruction Details Option A
~~5-22I Primary Roadways – Underground Access Road Plan & Profile~~
5-23 Primary Mine Haul Roads Cross Sections/Detail
5-24 Ancillary Roads Typical Cross Section

Sedimentation Diversions/Impoundments (5-25 to 5-34)
5-25 Diversion Ditch and Sediment Impoundment Plan View
5-26 Sediment Impoundment Watersheds
5-27 Diversion Ditch Watersheds
5-28 Sediment Impoundment 1 Details
5-28B Sediment Impoundment 1B Details
5-29 Sediment Impoundment 2 Details
5-30 Sediment Impoundment 3 Details
5-31 Sediment Impoundment 4 Details
5-32 Impoundment Spillway Detail
5-33 Diversion Ditch 1 Details
5-34 Diversion Ditch 2, 3 and 4 Details
5-34A Diversion Ditch 4-A and B-1T Details

Reclamation/Regrading (5-35 to 5-38)

5-35 Not Used
5-36 Not Used
5-37 Post Mining Topography
5-37A Post Mining Topography Cross Sections
5-38 Reclamation Sequence

Geotechnical (5-39)
5-39 Geotechnical Samples and Boring Locations
5-40 Dewatering Trench Details

Highwall Mining Details (5-41 to 5-44)
5-41 Typical Trench Detail for Highwall Mining
5-42 Typical Panel Detail 10 Holes per Panel for Under 100 feet Cover
5-43 Typical Panel Detail 10 Holes per Panel for Under 150 feet Cover
5-44 Typical Panel Detail 10 Holes per Panel for Over 150 feet Cover

General
5-45 North Area Pre-mining Topography
5-46 North Area Disturbance Sequence

Facilities (5-47 to 5-49)
5-47 Facilities and Structures Layout
5-48 Facilities and Structures Construction Sequence – Area 1
5-49 Facilities and Structures Construction Sequence – Area 2
5-50 Not Used
5-51A Temporary Spoil Stockpile Details
5-51B Topsoil Stockpile Details

Coal Recovery (5-50 to 5-53)
5-52 North Area Coal Extraction Overview
5-53 North Area Coal Removal Sequence
5-54 North Area Strip Ratio Isopach
5-55 North Area Coal Thickness Isopach

Overburden Handling (5-54 to 5-55)
5-56 North Area Overburden Isopach
5-57 North Area Overburden Removal Sequence

Transportation (5-56 to 5-62)
5-58 Primary Roads Northern Haul Road 1/2 Plan & Profile
5-59 Primary Roads Northern Haul Road 2/2 Plan & Profile
5-60 Primary Roads Southern Haul Road Plan & Profile
5-61 Postmining Roadways Route 136 Plan & Profile
5-62 Postmining Roadways Alton Coal Mine Road Plan & Profile
5-63 Postmining & Primary Roadways Typ. Sections & Details

5-64 Not Used

Sedimentation Diversions/Impoundments (5-63 to 5-69)

5-65 North Area Diversion Ditch and Sediment Impoundment Plan View
5-66 North Area Sediment Control Area Watersheds
5-67 North Area Sediment Impoundment 5 Details
5-67AB North Area Sediment Impoundment 5 Details – As-Built
5-68 North Area Sediment Impoundment 6 Details
5-68AB North Area Sediment Impoundment 6 Details – As-Built
5-69 North Area Sediment Impoundment 7 Details
5-69AB North Area Sediment Impoundment 7 Details – As-Built
5-70 Not Used
5-71 Not Used
5-71A North Area Sediment Impoundment T1 Details
5-71A-AB North Area Sediment Impoundment T1 Details – As-Built
5-72 North Area Diversion Ditch Details DD-5 thru UD-14
5-73 North Area Diversion Ditch Details T1-01 & T1-02

Reclamation/Regrading (5-71 to 5-73)

5-74 North Area Post Mining Topography
5-74A North Area Post Mining Topography - Area 1
5-74B North Area Post Mining Topography - Area 2
5-74C Not Used
5-75 North Area Post Mining Topography Cross Sections
5-76A North Area Earthworks Reclamation Sequence
5-76B North Area Facilities Reclamation Sequence
5-77 North Area Bond Polygons
5-78 North Area Geotechnical Samples and Boring Locations
5-79 Post-Mining Surface Hydrology

CHAPTER 5

R645-301-500. ENGINEERING

510. **INTRODUCTION**.

The engineering section of the Mining and Reclamation Plan (MRP) is divided into the operation plan, reclamation plan, design criteria, and performance standards. All of the activities associated with the coal mining and reclamation operations are designed, located, constructed, maintained, and reclaimed in accordance with the operation and reclamation plan.

511. **GENERAL REQUIREMENTS**

511.100 - 511.300. Contents

The operation and reclamation permit application includes descriptions of the coal mining and reclamation operations with attendant Drawings, plans, and cross sections. and its potential impacts to the environment as well as methods and calculations utilized to achieve compliance with design criteria.

All this information can be viewed in this section, Drawings 5-1 through 5-44 and Appendices 5-1 through 5-10 ~~and 5-13~~ for the existing Coal Hollow Mine and on Drawings 5-45 through 5-78 and Appendices 5-11, 5-12, 5-12A, and 5-14 for the North Private Lease.

512. **CERTIFICATIONS**

512.100. Cross Sections and Drawings.

All cross sections and Drawings required under applicable portions of sections 512.100 through 512.150 have been prepared by, or under the direction of, and certified by: a qualified, registered, professional engineer; a professional geologist; or a qualified, registered, professional land surveyor, with assistance from experts in related fields such as hydrology, geology and landscape architecture.

Compliance with this section has been completed and certifications are available on all cross sections and Drawings.

512.200. Plans and Engineering Designs.

All plans for excess spoil, durable rock fills, coal mine waste, impoundments, primary roads and variances from approximate original contour will be certified by a qualified registered professional engineer.

Plans for excess spoil, sediment impoundments, and primary roads have been certified by a qualified registered professional engineer. These certifications can be viewed on Drawings 5-22 through 5-37 for the existing Coal Hollow Mine and on Drawings 5-51A, 5-51C & 5-58 through 5-75 for the North Private Lease. No coal mine waste or durable rock fills are planned.

512.210 Excess Spoil Disposal Areas

A professional engineer experienced in the design and construction of earth and rock fills will certify the design of Excess Spoil Disposal Areas according to 535.100.

A professional engineer with experience in design and construction of earth and rock fills has certified the design of the Excess Spoil Disposal for the existing Coal Hollow Mine and of the Temporary Excess Spoil Pile for the North Private Lease according to 535.100. An expert in the field of slope stability and geotechnical analysis has provided a thorough review of the designs. These analyses can be viewed in Appendix 5-1 for the Coal Hollow Mine and in Appendix 5-11 for the North Private Lease.

512.220 - 230 Durable Rock Fills and Coal Mine Waste Structures

The MRP does not contemplate the construction of any permanent Durable Rock Fills or Coal Mine Waste structures. If such structures become part of the plan, a professional engineer experienced in the design of earth and rock fills and or disposal facilities will certify the design according to R645-301-535.100 - 536.

512.240. Impoundments.

A professional engineer experienced in the design and construction of impoundments will use current, prudent, engineering practices and will certify the design of the impoundment according to R645-301-743.

A professional engineer experienced in the design and construction of impoundments with assistance from a geotechnical expert has used current, prudent, engineering practices to design the proposed impoundments. The plans have been certified and a detailed geotechnical analysis has been provided. The detailed investigation for impoundments 5 through 9 and T1 found soils to be representative of the Coal Hollow Mine, thus additional geotechnical analysis, specific stability analysis for the Coal Hollow Mine apply to the impoundments at the North Private Lease. The certifications and drawings can be viewed in Drawings 5-25 through 5-31 and Appendices 5-1 and 5-2 for the existing Coal Hollow Mine and on Drawings 5-65 through 5-73 and Appendix 5-11, 5-12, and 5-12A for the North Private Lease. Investigation and analysis have been performed for all impoundments of the North Private Lease. This includes ponds 5 through 9 and T1 as well as ditches 5 through 20, T1-01 and T1-02.

512.250. Primary Roads.

A professional engineer will certify the design and construction or reconstruction of primary roads as meeting the requirements of 742.420.

Designs of primary roads have been certified as meeting the requirements of 742.420.

512.260. Variance From Approximate Original Contour.

In areas of the MRP where a variance from the approximate original contour is required, a professional engineer will certify the design for the proposed variance from the approximate original contour, as described under 270, in conformance with professional standards established to assure the stability, drainage and configuration necessary for the intended use of the site.

The MRP does not contemplate any variances from Approximate Original Contour for the Coal Hollow Mine or the North Private Lease.

513. **COMPLIANCE WITH MSHA REGULATIONS AND MSHA APPROVALS.**

513.100. Coal Processing Waste Dams and Embankments

The MRP does not contemplate the construction of any coal processing waste dams and embankments.

513.200. Impoundments and Sedimentation Ponds

Impoundments and sedimentation ponds meeting the size or other qualifying criteria of MSHA, 30 CFR 77.216(a) will comply with the requirements of MSHA, 30 CFR 77.216 (see R645-301-533.600, R645-301-742.222, and R645- 301-742.223).

No impoundments or sedimentation ponds meeting the size or other qualifying criteria of MSHA, 30 CFR 77.216(a) exist or are planned within the proposed Mine Permit Area. Should impoundments and sedimentation ponds meeting the size or other qualifying criteria of MSHA, 30 CFR 77.216(a) become necessary, compliance with the requirements of MSHA, 30 CFR 77.216 will be met.

513.300. Disposal of Underground Development Waste, Coal Processing Waste and Excess Spoil in underground mine workings.

The MRP does not contemplate any underground development waste, coal processing waste, or excess spoil being disposed of in underground mine workings.

513.400. Refuse Piles

The MRP does not contemplate the construction of any refuse piles.

513.500. Capping, Sealing and Backfilling Openings to the Surface from the Underground.

Each shaft, drift, adit, tunnel, exploratory hole, entryway or other opening to the surface from the underground will be capped, sealed, backfilled or otherwise properly managed consistent with MSHA, 30 CFR 75.1711 (see R645-301-551).

Underground mine portals are located in the bottom of the Coal Hollow ~~Pit 10~~open pit, and will ultimately be reclaimed and sealed by the backfilling of the pit to a vertical depth of approximately 112 feet (as shown on Drawing 5-37A) when no longer required.

All wells will be managed to comply with R645-301-748 and R645-301-765. Water monitoring wells will be managed on a temporary basis according to R645-301-738.

Wells constructed for monitoring groundwater conditions in the proposed Coal Hollow Mine permit and adjacent area, including exploration holes and boreholes used for water wells or monitoring wells, will be designed to prevent contamination of groundwater and surface-water resources and to protect the hydrologic balance. A diagram depicting typical monitoring well construction methods is shown in Figure 7-11. Monitoring wells will include a protective hydraulic seal immediately above the screened interval, an annular seal plugging the borehole above the hydraulic seal to near the ground surface, and a concrete surface seal extending from the top of the hydraulic seal to the ground surface which is sloped away from the well casing to prevent the entrance of surface flows into the borehole area. Well casings will protrude above the ground surface a sufficient height so as to minimize the potential for the entrance of surface water or other material into the well. A steel surface protector with a locking cover will be installed at monitoring wells to prevent access by unauthorized personnel. Where there is potential for damage to monitoring wells, the wells will be protected through the use of barricades, fences, or other protective devices. These protective devices will be periodically inspected and maintained in good operating conditions. Monitoring wells will be locked in a closed position between uses.

When no longer needed for monitoring or other use approved by the Division upon a finding of no adverse environmental or health and safety effects, or unless approved for transfer as a water well under R645-301-731.100 through R645-301-731.522 and R645-301-731.800, each well will be capped, sealed, backfilled, or otherwise properly managed, as required by the Division in accordance with R645-301-529.400, R645-301-631.100, and R645-301-748. Permanent closure measures will be designed to prevent access to the mine workings by people, livestock, fish and wildlife, machinery and to keep acid or other toxic drainage from entering ground or surface waters.

If a water well is exposed by coal mining and reclamation operations, it will be permanently closed unless otherwise managed in a manner approved by the Division.

Permanent closure and abandonment of water wells greater than 30 feet in depth will be in accordance with the requirements of "Administrative Rules for Water Well Drillers", State of Utah, Division of Water Rights or other applicable state regulations. Abandonment of wells will be performed by a licensed water well driller. The wells to be abandoned will be completely filled using neat cement grout, sand cement grout, unhydrated bentonite, or bentonite grout, or other materials approved by the Utah State Engineer's office. Alternatively, the well may be abandoned using a different procedure upon approval from the Utah State Engineer's office.

Abandonment materials will be introduced at the bottom of the well or required sealing interval and placed progressively upward to the top of the well. The casing will be severed a minimum of 2 feet below the ground surface. A minimum of 2 feet of compacted native material will be placed above the abandoned well upon completion.

Within 30 days of the completion of well abandonment procedures, a report will be submitted to the State Engineer by the responsible licensed driller giving data related to the abandonment of the well. This shall include the name of the licensed driller or other person(s) performing abandonment procedures, name of well owner at the time of abandonment, the address or location of the well by section, township, and range, abandonment materials and equipment used, water right or file number covering the well, the final disposition of the well, and the date of completion.

Exploration holes and boreholes will be backfilled, plugged, cased, capped, sealed, or otherwise managed to prevent acid or toxic contamination of water resources and to minimize disturbance to the prevailing hydrologic balance. Exploration holes and boreholes will be managed to ensure the safety of people, livestock, fish and wildlife, and machinery.

If a water well is exposed by coal mining and reclamation operations, it will be permanently closed unless otherwise managed in a manner approved by the Division.

If any exploration boreholes are to be used as monitoring wells or water wells, these will meet the provisions of R645-301-731

Boreholes will be backfilled to within 1 foot of the land surface with concrete or other materials approved by the Division as necessary to prevent contamination of groundwater or surface-water resources or to protect the prevailing hydrologic balance. The upper approximately 1 foot will be backfilled with native materials to facilitate reclamation (see Drawing 6-11). Exploration holes and boreholes that may be uncovered during mining and reclamation activities will be permanently closed unless approved for water monitoring or otherwise managed in a manner approved by the Division.

513.600. Discharges into an underground mine

The MRP does not contemplate discharges into an underground mine.

513.700. Surface Mining Closer than 500 Feet to an Active Underground Mine

The MRP does not contemplate mining within 500 feet of an active underground mine.

513.800. Coal Mine Waste Fires

The MRP does not contemplate the generation of any coal mine waste.

514. **INSPECTIONS**

*All engineering inspections, excepting those described under R645-301-514.320, will be conducted by a qualified registered professional engineer or other qualified professional specialist under the direction of the professional engineer.*514.100 Excess Spoil.

The professional engineer or specialist will be experienced in the construction of earth and rock fills and will periodically inspect the fill during construction. Regular inspections will also be conducted during placement and compaction of fill materials.

The construction method for the excess soil specified in 528.310 is expected to meet the 85% compaction standard. As verification, the fill compaction will be periodically field tested using method(s) as directed by the qualified registered professional engineer. A description of the test method and the test results will be provided to the Division as part of the quarterly inspection reports.

514.110. *Such inspections will be made at least quarterly throughout construction and during critical construction periods. Critical construction periods will include at minimum:*

514.111. *Foundation preparation, including the removal of all organic material and topsoil;*

514.112. *Placement of underdrains and protective filter systems.*

No underdrains or protective filter systems are planned as part of the excess spoil.

514.113. *Installation of final surface drain systems; and*

514.114. *The final graded and revegetated fill.*

514.120. *The qualified registered professional engineer will provide a certified report to the Division promptly after each inspection that the fill has been constructed and maintained as designed and in accordance with the approved plan and the R645-301 and R645-302 Rules. The report will include appearances of instability, structural weakness, and other hazardous conditions.*

514.200 - 250. Refuse Piles.

The MRP does not contemplate the construction of any refuse piles.

514.300. Impoundments.

514.310 - 313. Certified Inspection.

A professional engineer or specialist experienced in the construction of impoundments will inspect impoundments. Inspections will be made regularly during construction, upon completion of construction, and at least yearly until removal of the structure or release of the performance bond. The qualified registered professional engineer will promptly, after each inspection, provide to the Division, a certified report that the impoundment has been constructed and maintained as designed and in accordance with the approved plan and the R645 Rules. The report will include discussion of any appearances of instability, structural weakness or other hazardous conditions, depth and elevation of any impounded waters, existing storage capacity, any existing or required monitoring procedures and instrumentation and any other aspects of the structure affecting stability. A copy of the report will be retained at or near the mine site.

514.320. Inspection Standard and Frequency

Impoundments meeting the NRCS Class B or C criteria for dams in TR-60, or the size or other criteria of 30 CFR Sec. 77.216 must be examined in accordance with 30 CFR Sec. 77.216-3. Impoundments not meeting the NRCS Class B or C Criteria for dams in TR-60, or subject to 30 CFR Sec. 77.216, shall be examined at least quarterly. A qualified person designated by the operator shall examine impoundments for the appearance of structural weakness and other hazardous conditions.

The MRP does not contemplate construction of any impoundments meeting the NRCS Class B or C criteria for dams in TR-60, or the size or other criteria of 30 CFR Sec. 77.216. If such impoundments become necessary, they will be examined in accordance with 30 CFR Sec. 77.216-3. Impoundments not meeting the NRCS Class B or C Criteria for dams in TR-60, or subject to 30 CFR Sec. 77.216, will be examined at least quarterly. A qualified person designated by Alton Coal Development LLC will examine impoundments for the appearance of structural weakness and other hazardous conditions.

515. **REPORTING AND EMERGENCY PROCEDURES**

515.100. Slides

Any time a slide occurs which may have a potential adverse effect on public, property, health, safety, or the environment, Alton Coal Development LLC will notify the Division by the fastest available means and comply with any remedial measures required by the Division.

515.200. Impoundment Hazards.

If any examination or inspection of an impoundment discloses that a potential hazard exists, the person who examined the impoundment will promptly inform the Division of the finding and of the emergency procedures formulated for public protection and remedial action. If adequate procedures cannot be formulated or implemented, the Division will be notified immediately.

515.300. Temporary Cessation

515.311

During a temporary cessation of the Underground operations, surface access openings to underground operations and facilities in areas in which there are no current operations, but in which operations are to be resumed under an approved permit will be effectively maintained secured. Portal access will be controlled by security personnel, signage, temporary fencing and/or other means as determined appropriate by the company and MSHA. Portal access will be provided as required. Any facilities or equipment required to protect the underground workings, i.e. fans, pumps, etc., will be maintained and operated during this time. Since the portal area is graded to drain to a collection sump, any surface runoff will be collected there and will be utilized for dust control during operations and temporary cessation.

515.312.

During a temporary cessation, surface facilities in areas in which there are no current operations, but in which operations are to be resumed under an approved permit will be effectively secured.

For the North Private Lease, the temporary excess spoil pile is expected to be in place for less than 6 months. Should a temporary cessation occur and cause the pile to remain longer than 6 months, erosion control measures such as a tackifier will be applied to the pile to minimize damage and ensure stability.

515.321.

Before temporary cessation of coal mining and reclamation operations for a period of 30 days or more, or as soon as it is known that a temporary cessation will extend beyond 30 days, a notice of intention to cease or abandon operations will be submitted to the division. This notice will include:

- A statement of the exact number of surface acres and the horizontal and vertical extent of subsurface strata which have been in the permit area prior to cessation or abandonment,,
- The extent and kind of reclamation of those areas which has been accomplished, and
- Identification of the backfilling, regrading, revegetation, environmental monitoring, and water treatment activities that will continue during the temporary cessation.

515.322.

Before temporary cessation of coal mining and reclamation operations for a period of 30 days or more, or as soon as it is known that a temporary cessation will extend beyond 30 days, a notice of intention to cease or abandon operations will be submitted to the division. This notice will include:

- A statement of the exact number of acres which have been affected in the permit area prior to such temporary cessation,
- The extent and kind of reclamation of those areas which has been accomplished, and
- Identification of the backfilling, regrading, revegetation, environmental monitoring, and water treatment activities that will continue during the temporary cessation.

516. **PREVENTION OF SLIDES**

The moderate topography in the area of the planned Coal Hollow Mine will minimize the potential for unplanned slides. A natural barrier will, however, be left undisturbed except as necessary for roads, sedimentation control, temporary topsoil and spoil storage and similar features, beginning at the elevation of the coal seam and extending from the outslope for a distance of at least 50 ft. The barrier will be retained in place to prevent slides and erosion.

520. **OPERATION PLAN.**

521. **GENERAL.**

The plan, with Drawings, cross sections, narrative, descriptions, and calculations indicates how the relevant requirements will be met. The lands subject to coal mining and reclamation operations over the estimated life of the operations are identified and briefly described. All appropriate information for the Coal Hollow Mine is located in the subsequent sections and Drawings 5-1 through 5-44 and Appendices 5-1 through 5-10 ~~and Appendix 5-13~~. Topsoil piles and removal sequencing is shown on Drawing 2-2. All appropriate information for the North Private Lease is located in the subsequent sections and Drawings 5-45 through 5-79 and Appendices 5-11, 5-12, 5-12A, and 5-14. Topsoil piles and removal sequencing is shown on Drawing 2-4.

The Coal Hollow Mine is located approximately 2.5 miles south of Alton, Utah. The North Private Lease is located approximately 0.8 miles south of Alton, Utah. In order to maximize the use and conservation of the coal resource, coal will be recovered using large hydraulic excavators, front end loaders, off-road trucks, underground continuous miner and a highwall auger miner (See Chapter 9 which addresses R645-302 regulations). Mined coal will be hauled to a central coal area for crushing and placement into a stockpile. Coal from the stockpile will be transferred into a bin and loaded into over-the-road trucks for transport. Section 523 of this chapter provides detailed production, sequence, and timing information. Drawings 5-2 and 5-46 show the disturbance sequence for the Coal Hollow and North Lease permit areas, respectively.

521.100. Cross Sections and Drawings.

The application includes cross sections, Drawings and plans showing all the relevant information required by the Division. Appropriate information is provided in Drawings and cross sections 5-1 through 5-44 for the existing Coal Hollow Mine and on Drawings and cross sections 5-45 through 5-79 for the North Private Lease.

521.110. Previously Mined Areas.

Historically, there has been some underground mining of coal within the Alton Amphitheater. The following underground mines are known to have historically existed within the Amphitheater:

- Seaman Mine
- Smirl Mine
- Alton Mine
- Johnson Mine
- Silver Mine

There are not any known mines that existed or currently exist within the permit areas or the adjacent area as defined in R645-100-200. There is also not any active coal mining operations in the area.

521.120. Existing Surface and Subsurface Facilities and Features**.**

521.121. Buildings

The location of all buildings in and within 1,000 feet of the proposed permit area, with identification of the current use of the buildings is shown on Drawings 1-5 and 1-6 for the Coal Hollow Mine. There are no buildings in or within 1,000 feet of the permit area for the North Private Lease.

521.122. Surface and Subsurface Man-Made Features

The only known surface and subsurface manmade features that exist within the existing and proposed permit areas are:

- County Road 136 (locations shown on Drawing 5-3 and Drawing 5-47)
- Alton Coal Mine Road (location shown on Drawing 5-47)
- Water pipeline to Pond 20-1 (location shown on Drawing 7-7)
- Water pipelines for agricultural uses in the North Private Lease (locations shown on Drawing 7-7)

521.123. Public Roads

Two Class B public roads, Kane County Road 136 (K3900) and Alton Coal Mine Road (K3100), are located in or within 100 feet of the permit areas and are shown on Drawing 5-3 and Drawing 5-47. Drawing 5-48 also shows County Road 136 in relation to the North Private Lease Permit Area 1. While the bypass around the North Private Lease for County Road 136 is being constructed, mining operations will commence in Area 1. During this time, traffic on County Road 136 will continuously have unimpeded access and will not require escort through the mine permit area. Until the bypass road is complete, the mining area will be barricaded and fenced along County Road 136 and access will be limited to four (4) temporary gates.

In addition, Kane County has recently made a claim on the two-track road located adjacent to Lower Robinson Creek which is also located within the permit boundary. This road has mostly been closed to the public since it crosses private land and ACD has worked with Kane County to develop an access agreement which includes access through the permit area by mine personnel escort only. This agreement is included as Appendix 1-8 in Chapter 1. The County has named this Class D public road K3993.

521.124. Existing areas of spoil, waste, coal development waste, and noncoal waste disposal, dams, embankments, other impoundments, and water treatment and air pollution control facilities.

There are three impoundments currently located within the existing Coal Hollow Mine permit area which are Pond 20-1, Pond 29-3 and Pond 29-5 shown on Drawing 7-7. The area of these impoundments are approximately 3,400, 10,500 and 6,963 square feet respectively. There are four impoundments located within the North Private Lease permit area, Ponds 12-1 thru 12-3 and Pond 13-1 shown on Drawing 7-7. The area of these impoundments are approximately 823, 3,853, 8,319 and 33,525square feet, respectively.

These stock ponds identified on Drawing 7-7 within the center and western drainages existing prior to mining will be eliminated per the landowner request. This requires coordination with the USACOE for the elimination of wet lands (final landform shown on Drawings 5-74 and 5-75) identified in the Preliminary Jurisdictional Determination SPK-2011-01248 November of 2012 and updated September 2015 (MRP, Volume 10, NPL Wetland Study Report Final). Disturbances within the identified wetlands will not occur until approval of the 404 permit. The 404 permit will allow for take of the wetlands within the center drainage with wetlands being replaced in offsite mitigation under USCOE jurisdiction.

There are no other areas of existing spoils, waste, coal development waste, and noncoal waste disposal, dams, embankments, other impoundments, and water treatment and air pollution control facilities within the permit area.

521.125. Ponds and Other Impoundments

The MRP does not contemplate construction of any permanent water impoundments; coal processing waste banks and coal processing waste dams or embankments. The planned location of each sedimentation pond is shown on Drawing 5-3 for the Coal Hollow Mine and Drawing 5-47 for the North Private Lease. Appendix 5-12 and Drawing 5-79 detail the post-mining surface hydrology of the North Private Lease

521.130. Landowners and Right of Entry and Public Interest Drawings.

All boundaries of lands and the names of present owners of record of both surface and subsurface within the Mine Permit Area are shown on Drawing 1-3 (Surface) and Drawing 1-4 (Subsurface).

521.132. Permit Boundary

The boundaries of land within the proposed permit area are shown on all applicable Drawings.

521.133. Public Roads

Limited mining or reclamation operations are planned within 100 ft. of an operating public road. Operations adjacent to County Road 136 will occur during construction of the bypass road around the North Private Lease, and mine vehicles may cross the right-

of-way of Kane County Road 136 for a short period early in the operation's life. Any mine traffic crossing the county road will be required to stop and yield to any County Road 136 traffic before proceeding. Other appropriate measures, including signage and mine operating practices and training will be implemented to protect the public. Appendix 1-11 includes an easement and agreement with Kane County to construct the North Private Lease bypass road and to safely conduct mining operations adjacent to the current county road concurrent with construction activities.

521.133.2 Relocating a Public Road:

The design of any relocated road will be approved by Kane County authorities, or such other authorities as have jurisdiction. Appropriate measures will be taken to prevent entrance into the mining area via the pre-existing road, and appropriate signage and barriers will be installed to protect the public.

County Road 136 (K3900) and Alton Coal Mine Road (K3100) will be temporarily relocated outside the permit areas concurrent with the beginning of mining for both the existing Coal Hollow Mine and the North Private Lease until mining is complete and then reconstructed. The relocation of County Road 136 for both the Coal Hollow Mine and the North Private Lease will require construction of temporary bypass roads. The locations of these bypass roads are shown in Drawings 5-3 and 5-45 for the Coal Hollow Mine and North Private Lease respectively. Plans and details for these roads are shown in Appendix 1-7 and 1-11. Each bypass road will be constructed, inspected, certified and available for public use prior to closure of the associated section of impacted County Road 136. The Alton Coal Mine Road (K3100) will not require a significant bypass, but will be accessed via a new intersection with the North Private Lease bypass road approximately 500 ft. south of the current intersection with County Road 136.

Drawing 5-48 shows County Road 136 in relation to the North Private Lease Permit Area 1. While the bypass around the North Private Lease for County Road 136 is being constructed, mining operations will commence in Area 1. During this time, traffic on County Road 136 will continuously have unimpeded access and will not require escort through the mine permit area. Until the bypass road is complete, the mining area will be barricaded and fenced along County Road 136 and access will be limited to four (4) temporary gates.

Upon completion of mining and reclamation activities in each permit area, the aforementioned pre-mining roads will be reestablished to their pre-mining state or better. The details for reestablishing road K3900 within the Coal Hollow Mine are shown on Drawings 5-22E, 5-22F and 5-22H. The details for reestablishing roads K3900 and K3100 within the North Private Lease are shown on Drawings 5-61 thru 5-63. The details related to reestablishing K3993 following mining are shown on Drawing 5-22C.

It is expected that County Road 136 will be diverted around the Coal Hollow Mine for approximately 5 years, and diverted around the North Private Lease for approximately 6 years.

521.140. Mine Drawings and Permit Area Drawings.

521.141 *The boundaries of all areas proposed to be affected over the estimated total life of the coal mining and reclamation operations, with a description of size, sequence and timing of the mining, the coal mining and reclamation operations to be conducted, the lands to be affected throughout the operation, and changes in facilities or features to be caused by the proposed operations;*

These items are depicted on Drawings 5-1 through 5-44 for the Coal Hollow Mine and on Drawings 5-45 through 5-79 for the North Private Lease.

Current land disturbance for the Coal Hollow Mine is shown on Drawing 5-2, while the expected land disturbance sequence for the North Private Lease is shown on Drawing 5-46. Total disturbance for the Coal Hollow mine is 414.5 acres. Total disturbance for the North Private Lease is expected to reach a maximum of 239.0 acres over a 6.5 year period, with 69.8 acres in Area 1 of operations, 112.0 acres in Area 2, and 57.2 acres in Area 3.

Overburden mining for the Coal Hollow Mine and North Private Lease is depicted on Drawing 5-16 and Drawing 5-57 respectively, according to the methods and schedules detailed in section 523 Mining Methods of this chapter.

Coal mining for the Coal Hollow Mine and North Private Lease is depicted on Drawings 5-9 & 5-10 and Drawings 5-52 & 5-53 respectively, according to the methods and schedules detailed in section 522 Coal Recovery of this chapter.

A layout of facilities, structures, and features for the Coal Hollow Mine and North Private lease is shown on Drawing 5-3 and Drawing 5-47 respectively. Sections 521.160, 521.170, and 521.180 of this chapter describe these features and their construction and use.

Post-mining topography and cross-sections of the reclamation plans of the Coal Hollow Mine permit area are provided in Drawings 5-37 and 5-37A. This reclamation requires rehandling much of the fill above original contour to fill in the final pits, except Pits F-7 and F-8 which will remain open until the closure of underground operations. Pits F-7 and F-8 will then require additional borrow (apx. 1.5 Million C.Y.) from the areas outlined in Drawings 5-19, 5-37 and 5-37A . In preparation for this final borrow, Pit B-1 (as shown on Drawing 5-10) will be excavated and simultaneously backfilled (as detailed in sections 523 and 553 of this chapter) to remove all coal from the borrow volume to reach the intermediate landform depicted in Drawings 5-35 and 5-36. Upon completion of underground mining, Pit F-8 will then be backfilled from the Borrow Area and all ground will be returned to the final landform shown in Drawings 5-37 and 5-37A. This rehandle and additional borrow will bring all disturbed ground back to Approximate Original Contour (AOC). All post-mining landforms, drainage, and slopes will be consistent with

pre-mining conditions and regional trends. A detailed description of the reclamation scenario is provided in Section 528.200 Overburden and 553 Backfilling and Grading of this Chapter. The Coal Hollow Mine requires 297.9 acres of Phase 1 reclamation, 414.5 acres of Phase 2, and 414.5 acres of Phase 3.

Reclamation plans for the North Private Lease area are provided in Drawings 5-74 thru 5-76B and Drawing 5-79. These plans include restoration of all disturbed ground to AOC with only slight variation in landform, most notably a possible material void on the east of Kanab Creek which will result in a net increase of land available for agriculture and elimination of the center and western drainages east of Kanab Creek. In the case where borrow from the area east of Kanab Creek is not necessary, the material void will not occur and post-mining topography will achieve AOC while closely mirroring original topography as shown on Drawing 5-45. As borrow from this area East of Kanab Creek is unlikely, bond coverage for disturbance and mining of this area has been sterilized. Any planned disturbance in this area would require recalculation of the bond and an amendment to the MRP. All post-mining landforms, drainage, and slopes will be consistent with pre-mining conditions and regional trends. A detailed description of the reclamation scenario is provided in Section 528.200 Overburden and 553 Backfilling and Grading of this Chapter. The North Private Lease requires 189.3 acres of Phase 1 reclamation, 239.0 acres of Phase 2, and 239.0 acres of Phase 3.

Underground mining is also permitted for the Coal Hollow Mine. Mine portals will be within an existing pit and coal will be loaded within the pit and hauled in the same manner as with the surface mining. Underground mining plans are shown in Drawings 5-3, ~~5-3B,~~ 5-9 and 5-10.

521.142

Drawing 5-10 shows the underground workings. All underground coal mining will be first mining only. Subsidence will be prevented by following the recommendations provided in the Norwest Corporation letter report found in Appendix 5-9.

521.143 The proposed disposal sites for placing excess spoil generated at surface areas affected by surface operations, underground operations and facilities for the purposes COAL MINING and RECLAMATION ACTIVITIES according to:

- *R645-301-211: The applicant will present a description of the premining soil resources as specified under R645-301-221. Topsoil and subsoil to be saved under R645-301-232 will be separately removed and segregated from other material.*

  The soil resources for the excess spoil disposal area in the Coal Hollow Mine are described in Appendix 2-1. A plan has been developed for removal of topsoil and suitable subsoil based on the soil descriptions in this appendix. The handling plan

can be viewed on Drawing 2-2. Topsoil and acceptable subsoil will be separately removed and segregated from other material prior to placement of any spoil.

The soil resources for the North Private Lease temporary excess spoil disposal area are described in Volume 11. A plan has been developed for removal of topsoil and suitable subsoil based on the soil descriptions in this appendix. The handling plan can be viewed on Drawing 2-4 and is described in Chapter 2 Section 231 and Section 523 of this Chapter. Topsoil and acceptable subsoil will be separately removed and segregated from other material prior to placement of any spoil.

- *R645-301-212: After removal, topsoil will be immediately redistributed in accordance with R645-301-242, stockpiled pending redistribution under R645-301-234, or if demonstrated that an alternative procedure will provide equal or more protection for the topsoil, the Division may, on a case-by case basis, approve an alternative;*

  Excess spoil will have topsoil and subsoil redistributed in an approximately uniform, stable thickness with the approved post mining land use, contours and surface water drainage systems. Material handling practices will prevent excess compaction of these materials. Handling practices will also protect the materials from wind and water erosion before and after seeding and planting.

- *R645-301-412.300: Criteria for Alternative Postmining Land Uses.*

  The MRP does not contemplate alternative postmining land uses.

- *R645-301-512.210: Excess Spoil. The professional engineer experienced in the design of earth and rock fills will certify the design according to R645-301-535.100.*

  A professional engineer experienced in the design of earth and rock fills with assistance from a geotechnical expert has certified the design according to R645-301-535.100. These certifications can be viewed on Drawings 5-37, 5-37A and 5-17 for the Coal Hollow Mine and Drawings 5-51A and 5-51C for the North Private Lease.

- *R645-301-512.220: Durable Rock Fills*

  No durable rock fills are planned.

- *R645-301-514.100: Excess Spoil. The professional engineer or specialist will be experienced in the construction of earth and rock fills and will periodically inspect the fill during construction. Regular inspections will also be conducted during placement and compaction of fill materials.*

A professional engineer or specialist that is experienced in the construction of earth and rock fills will inspect the fill during construction and regular inspections will also be conducted during placement and compaction of fill materials.

- *R645-301-528.310: Excess spoil will be placed in designated disposal areas within the permit area, in a controllable manner to ensure mass stability and prevent mass movement during and after construction. Excess spoil will meet the design criteria of R645-301-535. For the purposes of SURFACE COAL MINING AND RECLAMATION ACTIVITIES, the permit application must include a description of the proposed disposal site and the design of the spoil disposal structures according to R645-301-211, R645-301-212, R645-301-412.300, R645-301-512.210, R645-528.310, R645-301-535.100 through R645-301-535.130, R645-301-535.300 through R645-301-535.500, R645-536.300, R645-301-542.720, R645-301-553.240, R645-301-745.100, R645-301-745.100, R645-301-745.300, and R645-301-745.400.*

  Excess spoil will be placed in the area designated on Drawing 5-3 and 5-37 for the Coal Hollow Mine and on Drawing 5-47 and 5-51A for the North Private Lease. This fill will be placed in lifts not to exceed 4 feet. The material will be transported from the overburden removal area to the fill by end dump haul trucks and a dozer(s) will spread the spoil to this lift thickness. The fill will meet at minimum 85% compaction as related to the standard Procter. Final slopes will be regraded to a maximum slope of 3h:1v. The top of the fill will be sloped to approximately 2% to prevent pooling of water and to reestablish drainage similar to original flow patterns.

  The excess spoil placed on the non-mined areas of the Coal Hollow Mine is approximately 32 acres and varies in height from 35 to 110 feet. Design and the geotechnical study for this fill can be viewed in Appendix 5-1. Due to actual swell factors of overburden material differing from swell factors used in initial planning, the size and configuration of the excess spoils has varied greatly from what was originally analyzed in Appendix 5-1. It is now anticipated that the excess spoil pile will be completely rehandled as pit backfill.

  The temporary excess spoil placed above pits 4, 5 and 6 of the North Private Lease is approximately 9 acres and varies in height from 23 to 59 feet. Design of this temporary fill can be viewed in Drawing 5-51A and the geotechnical study can be viewed in Appendix 5-11.

  The Northwest (NW) temporary excess spoil placed adjacent to pits 18 to 21 of the North Private Lease is approximately 6 acres and varies in height from 27 to 41 feet. Design of this temporary fill can be viewed in Drawing 5-51C and the geotechnical study can be viewed in Appendix 5-11.

- *R645-301-535.100 through R645-301-130: Disposal of Excess Spoil*

A geotechnical analysis of the Coal Hollow Mine long term excess spoil structure design has been completed by an expert in this field. The long term static safety factor for this structure design is estimated at 1.6 to 1.7. Lifts will be placed in thicknesses not to exceed 4 feet. The lifts will meet 85% compaction by the standard Procter. The fill will be graded to allow for drainage similar to original patterns and to prevent excessive infiltration of water. Fill will then be rehandled as pit backfill prior to final reclamation while the remaining landform shown in Drawing 5-37 will be covered with subsoil and topsoil as specified in Chapter 2 to provide conditions suitable for revegetation of the area. The geotechnical study can be viewed in Appendix 5-1.

A geotechnical analysis of the North Private Lease temporary excess spoil structure design has also been completed by an expert in this field. The long-term static safety factor for these structure designs is estimated at 1.6 to 1.7. Lifts will be placed in thicknesses not to exceed 4 feet. The lifts will meet 85% compaction by the standard Procter. The fill will be graded to allow for drainage similar to original patterns and to prevent excessive infiltration of water. As these excess spoil structures will be rehandled to backfill the open pit in a short time frame (less than 6 months), it is not anticipated that this fill will be covered with subsoil and topsoil. The geotechnical study can be viewed in Appendix 5-11.

- *R645-301-535.300 through R645-301-535.500: Disposal of Excess - Spoil Durable Rock Fills.*

  No durable rock fills are planned.

- *R645-301-536.300: Disposal of Coal Mine Waste in Excess Spoil*

  No coal mine waste is planned in the excess spoil area.

- *R645-301-542.720: Excess spoil will be placed in designated disposal areas within the permit area, in a controlled manner to ensure that the final fill is suitable for reclamation and revegetation compatible with the natural surroundings and the approved postmining land use. Excess spoil that is combustible will be adequately covered with noncombustible material to prevent sustained combustion. The reclamation of excess spoil will comply with the design criteria under R645-301-553.240.*

  The Coal Hollow Mine long term excess spoil will be completely rehandled as pit backfill as shown in Drawing 5-37 and 5-37A. The remaining landform will be suitable to the surrounding area and for the postmining land use of primarily grazing. No combustible excess spoil will be placed in the proposed structure. The reclamation of the spoil does not include any terraces and the slopes will not exceed 3h:1v.

The North Private Lease temporary excess spoils will be rehandled and used as backfill in a short time frame (less than 6 months) and will not require any reclamation measures.

- *R645-301-553.240: The final fill configuration of the fill (excess spoil) will be suitable for the approved postmining land use. Terraces may be constructed on the outslope of the fill if required for stability, control of erosion, to conserve soil moisture, or to facilitate the approved postmining land use. The grade of the outslope between terrace benches will not be steeper than 2h:1v (50 percent).*

  The Coal Hollow Mine long term excess spoil will be completely rehandled as pit backfill as shown in Drawings 5-37 and 5-37A. The remaining landform will be suitable to the surrounding area and for the postmining land use of primarily grazing. The reclamation of the spoil does not include any terraces and the slopes will not exceed 3h:1v. The long term static safety factor for these slopes is estimated to be 1.6 to 1.7.

  The North Private Lease temporary excess spoils will be rehandled and used as backfill in a short time frame (less than 6 months). The spoil will not include any terraces and the slopes will be maintained at no less than the natural angle of repose at an overall 1.3h:1v. The static safety factor for these temporary slopes is estimated to be 1.6 to 1.7.

- *R645-301-745.100: General Requirements.*

  745.110: Excess Spoil will be placed in designated disposal areas within the permit area, in a controlled manner to:

  745.111: Minimize the adverse effects of leaching and surface water runoff from the fill on surface and underground water;

  Reclamation of the final landform following rehandle of the Coal Hollow Mine excess spoil will include topsoil and a subsoil layer. Infiltration through the reclamation is expected to be minimal based on the high clay content of these soils. The North Private Lease temporary excess spoils will be in use for such a short period of time and will be comprised mostly of high-clay tropic shale such that infiltration is also expected to be negligible. In addition, laboratory data located in Appendix 7-16 for the overburden shows that there is minimal potential for leaching of pollutants should infiltration rates become higher than expected.

  The foundations of the excess spoil areas also have high clay content with minimal potential for infiltration. This will provide an additional, natural barrier to protect ground water present beneath the proposed structures.

  745.112: Ensure permanent impoundments are not located on the completed fill. Small depressions may be allowed by the Division if they are needed to retain

moisture or minimize erosion, create and enhance wildlife habitat or assist revegetation, and if they are not incompatible with the stability of the fill; and

Permanent impoundments are not planned on either of the excess spoil areas. Small depressions may be constructed as allowed by the Division to retain moisture, minimize erosion, create and enhance wildlife habitat or assist revegetation.

745.113: Adequately cover or treat the excess spoil that is acid- and toxic forming with nonacid nontoxic material to control the impact on the surface and ground water in accordance with R645-301-731.300 and to minimize adverse effects on plant growth and approved postmining land use.

Laboratory data located in Appendix 7-16 representative of the overburden planned for disposal in the excess spoil areas does not show acid- and toxic forming characteristics.

745.120: Drainage Control. If the disposal area contains springs, natural or manmade water courses, or wet weather seeps, the fill design will include diversions and underdrains as necessary to control erosion, prevent water infiltration into the fill and ensure stability.

A spring and seep survey available in Chapter 7 has identified no springs or wet weather seeps in the proposed excess spoil areas. The final surface of the landform underneath the Coal Hollow Mine excess spoil will be regraded to a contour that will route water from snowmelt and rainfall to natural drainages as shown on the final contours Drawing 5-37. There are no manmade water courses present in the excess spoil areas. No underdrains are planned for the excess spoil structures.

745.121: Diversions will comply with the requirements of R645-301-742.300

No diversions are planned in the excess spoil areas.

745.122 : Underdrains

No underdrains are planned in the excess spoil areas.

745.300: Durable Rock Fills

No durable rock fills are planned in the excess spoil areas.

745.400: Preexisting Benches

Excess spoil will not be disposed of through placement on preexisting benches.

521.150. Land Surface Configuration Drawings.

Surface contours representing the existing land surface configuration of the Coal Hollow Mine permit area are shown on Drawing 5-1 and the post mining land configuration is shown on 5-37. Cross sections with both these landforms are shown on Drawing 5-37A.

Surface contours representing the existing land surface configuration of the proposed North Private Lease permit area are shown on Drawing 5-45 and the post mining land configuration is shown on 5-74. Cross sections with these landforms are shown on Drawing 5-75. Post mining land configuration is also shown for each of the individual Permit Areas on Drawings 5-74A through 5-74C.

521.151 Slope Measurements or Surface Contours:

For both the Coal Hollow Mine and the North Private Lease, Drawings 5-1, 5-37 & 5-37A and Drawings 5-45, 5-74 & 5-75 respectively use topographical contours to represent the surface configuration for pre- and –post mining scenarios. The contours for the Coal Hollow Mine drawings occur at 2 ft. elevation intervals, with index contours occurring at 10 ft. elevation intervals. The contours for the North Private Lease drawings occur at 2 ft. elevation intervals, with index contours occurring at 10 ft. elevation intervals. Each Drawing has been certified according to R645-301-512.

521.152 Previously Mined Areas:

Neither the Coal Hollow Mine nor the North Private Lease propose activities on areas that have been previously mined.

521.160. Maps and Cross sections of the Proposed Features for the Proposed Permit Area. These maps and cross sections will clearly show:

521.161 Buildings, utility corridors, and facilities to be used:

These items are shown on Drawings 5-3 through 5-8C for the Coal Hollow Mine and on Drawing 5-47 for the North Private Lease.

521.162 The area of land to be affected within the proposed permit area, according to the sequence of mining and reclamation:

A yearly and overall disturbance sequence for the permit area is provided on Drawing 5-2 for the Coal Hollow Mine and on Drawing 5-46 for the North Private Lease.

521.163 Each area of land for which a performance bond or other equivalent guarantee will be posted under R645-301-512;

The area of land that will have a performance bond posted in the Coal Hollow Mine is shown on Drawing 5-3. Drawing 5-3 was reconfigured in December of 2014 prior to

phased bond release to remove performance bond from areas that are no-longer within the MRP planed disturbance (not disturbed by mining), thus removing the need to include in bond release. The total disturbance area is also broken up into discrete bond polygons on Drawing 5-19.

The area of land that will have a performance bond posted in the North Private Lease is shown on Drawing 5-47. The lease boundary encompasses three Permit Areas. The total disturbance area for the North Private Lease is also broken up into discrete bond polygons on Drawing 5-77.

521.164 Each coal storage, cleaning and loading area. The map will be prepared and certified according to R645-301-512;

These facilities can be viewed on Drawings 5-3 through 5-5 for the Coal Hollow Mine and on Drawing 5-47 through 5-51A for the North Private Lease. Note that coal loading will occur within the active pit excavation and backfill crest on the North Private Lease area, and the mine will not use a designated coal loading or stockpile area.

521.165 Each topsoil, spoil, coal preparation waste, underground development waste, and noncoal waste storage area. The maps will be prepared and certified according to R645-301-512;

For the Coal Hollow Mine, topsoil storage areas and handling can be viewed on Drawing 2-2. Spoil placement and the excess spoil structure can be viewed on Drawings 5-3, 5-17, 5-37 and 5-37A.

For the North Private Lease, prime farmland soils and topsoil storage areas and handling can be viewed on Drawings 2-4 and 5-51B. Temporary spoils placement can be viewed on Drawing 5-47 through 5-51C.

521.166 Each source of waste and each waste disposal area relating to coal processing or pollution control;

Only sizing of the coal is proposed. This process will not produce any waste.

521.167 Each explosive storage and handling facility;

Need for these facilities are not anticipated at this time. Instead, blasting will be contracted out to a local blasting company who is licensed to transport explosives. The blasting contractor will transport all explosives material needed for the shot into the mine for use, and take any remaining explosives inventory for storage offsite after each shot is completed. While onsite, all explosive materials will be handled solely by the licensed contractor. These activities will follow the blasting plan as outlined in Appendix 5-4. Should these facilities become necessary, appropriate drawings will be provided to the Division.

521.168 For the purposes of SURFACE COAL MINING AND RECLAMATION ACTIVITIES, each air pollution collection and control facility; and

There are no specific air pollution collection or control facilities proposed.

521.169 Each proposed coal processing waste bank, dam or embankment. The map will be prepared and certified according to R645-301-512.

The MRP does not contemplate processing of coal that will produce waste.

521.170. Transportation Facilities Drawings.

Transportation facilities for the Coal Hollow Mine include eight primary roads, a conveyor system, and miscellaneous ancillary/temporary roads. Numerous drawings detail the designs and specifications for each one of the proposed facilities. The following is a description of each facility and a reference for the associated drawings:

- Roads: Three primary mine haul roads are planned within the permit area. The first road extends from the coal unloading area to the first series of pits along the west side of the property. This road will be utilized for access to the pits (pits shown on Drawing 5-10). This road will be approximately 1,100 feet in length and will be utilized throughout mining. There will be four culverts installed along this road all sized for a 100 year, 24 hour storm event. The first culvert will be across a tributary of Lower Robinson Creek and will be a 36 inch corrugated steel pipe. The second culvert is the main crossing over Lower Robinson Creek and is a 96 inch corrugated steel pipe. Both of these culverts have been sized based on analysis of the Lower Robinson Creek watershed. This analysis can be viewed in Appendix A5-3. The third and fourth culverts are crossing over a diversion ditch that will route water mainly from disturbed areas along the south side of Lower Robinson Creek to a sediment impoundment. These culverts will be a 24 inch corrugated steel pipe.

  The second road extends from the first road and proceeds southwest to join and run along a 1,200’ section of the rebuilt County Road 136 corridor. This road is approximately 2,900 feet in total length. There are two culvert crossings along the County Road 136 portion of this road that are placed to match the original county specifications. These culverts will be 18 inch culverts sized to match the County Road 136 culverts originally in place.

  The following specifications apply to these Primary mine haul roads:
  1) Roads will be approximately 80’ in width
  2) Approximately a 2% crown
  3) Approximately one foot deep cut ditches along shoulders for controlling storm water
  4) 18” of crushed rock or gravel for road surfacing, except for the section of the Pit B-1 access extending from County Road 136 to the pit. This section of road will utilize approximately 6” of crushed rock or gravel for road surfacing. This

shallower depth of gravel will still provide the necessary benefits of dust control and sediment control for surface water runoff during a short usage life. For this section of road will be utilized for coal haulage for only around 2-3 months and the western half of it will be eventually mined out as part of the borrow area.

5) Cut and fill slopes of 1.5 h:1v
6) Minimum fill over each culvert will be 2 times diameter of culvert
7) Berms placed as necessary along fills

The underground mine portal access and haul road will also be a primary road. This road is accessed from the main haul road from the coal unloading area. The underground access/haul road will be constructed to the same specifications for the haul roads above, except that the road may be narrowed to a 40 foot width. Drawing 5-22I provides the as-built plan and profile for the underground access road, and will be updated when the portal area is re-established in subsequent Federal Block pits.

The ancillary roads will have similar specifications except surfacing will occur only as needed and may be narrowed to a 40 foot road width. A typical cross section for the ancillary roads can be viewed on Drawing 5-24.

The location and details for Primary Mine Haul roads can be viewed on Drawings 5-3 and 5-22 and 5-23.

In addition to the three primary Mine Haul roads, the road located within the facilities area is also classified as a primary road. This road is planned to be 24 feet wide with 24 inches of compacted sub base and 8 inches of compacted 1 inch minus gravel as surfacing. This road is referred to as “Facilities Roadway” and more details are described in 527.200 along with Drawings 5-22A and 5-22B.

In addition to the primary roads that will be present during active mining, four additional roads are planned to exist postmining and are also classified as primary roads for this reason.

Roads that will remain postmining are the following:

- Road to Water Well with details shown on Drawing 5-22D
- Road to east C. Burton Pugh property (K3993) with details shown on Drawing 5-22C. Kane County has claimed this road as County Road K3993.
- County Road 136 (K3900) with details on Drawing 5-22E, 5-22F and 5-22H. This County road will be reconstructed within the permit area by Kane County. This reconstruction will occur concurrently with the final phase of reclamation as scheduled on Drawing 5-38 and is expected to be completed by 2017.
- Road to Swapp Ranch (same specification as the Water Well Road)

The location of these roads is shown on Drawing 5-37 along with the post mining topography.

The ramps, benches and equipment travel paths within the active surface mining area are temporary in nature and will be relocated frequently as mining progresses. These temporary travelways are considered part of the pit due to their short term use, and are not individually designed nor engineered. They will be built and maintained to facilitate safe and efficient mine and reclamation operations.

Other temporary ancillary roads (such as the Pond 3 access road shown on Drawing 5-3) outside the mining area may be necessary from time to time to access facilities or impoundments during the life of operations. These roads will typically only comprise a single lane access approximately 14 feet wide that would see minimal use. Any surface flow on these roadways would not be highly erosive along generally gentle road gradients. Any flow on these roads will be controlled using minor berms or ditches, and in each case would be fully contained within the watershed of, and would report to the impoundments that they provide access for. These roads will not remain post-mining and also will not be individually designed nor engineered. They will be built and maintained to facilitate safe and efficient mine and reclamation operations.

- Conveyors: A conveyor system will be used to stockpile coal and to load highway approved haul trucks for transportation to market. The first conveyor is mainly a stacker system for the coal stockpile which will be located at the coal unloading area and will be approximately 451' in length. This conveyor is estimated to be a 48" solid frame system.

  The second conveyor is a coal reclaim belt that will be loaded by an above ground reclaim feeder from the coal stockpile and will convey coal to the loadout chute which will load the highway approved coal haulage trucks. This section will be approximately 290' in length. Similar to the first section, this conveyor is estimated to be a 48" solid frame system.

  An additional stacking conveyor will be installed to transfer coal from the underground conveyor system to stockpile from which trucks will be loaded. The stacking conveyor will be a 48" wide, wheel-mounted system, approximately 125' in length.

  Drawings of these systems can be viewed on Drawings 5-3 through 5-5.

Transportation facilities for the North Private Lease will consist of two primary roads, and miscellaneous ancillary/temporary roads. Drawings detail the designs and specifications for each one of the proposed facilities. The following is a description of each facility and a reference for the associated drawings:

- Roads: A primary haul road shown in Drawings 5-47, 5-58 and 5-59 will extend from the entrance of the permit area to the Center of Pit 21. There is one culvert crossing on this road as shown on Drawing 5-59. Culvert 4 (C-4) is sized at 12 inches. This

road is approximately 3,800 feet in length. This road is referred as the "Northern Haul Road". A second primary haul road shown in Drawings 5-47 and 5-60, the "Southern Haul Road" extends from the South end of Pit 1 on the West, to the South end of the Highwall Trench on the East. This road is approximately 2,980 feet in length. There are three culvert crossings along this road as shown in Drawing 5-60 including a substantial culvert to cross Kanab Creek. Culvert 1 (C-1) is sized at 24 inches. C-2 is sized at 36 inches to match the current culvert under County Road 136, and C-3 is sized at 144 inches for maximum anticipated flows in Kanab Creek. Final design of this culvert will be in conjunction with approvals and oversight from the Army Corps of Engineers. Culvert sizing calculations can be found in Appendix 5-12.

The following specifications apply to this Primary mine haul roads:

1) Roads will be approximately 80' in width
2) Approximately a 2% crown
3) Approximately one foot deep cut ditches along shoulders for controlling storm water
4) 18" of crushed rock or gravel for road surfacing
5) Cut and fill slopes of 1.5 h: 1v
6) Berms placed as necessary along fills

The ramps, benches and equipment travel paths within the active surface mining area are temporary in nature and will be relocated frequently as mining progresses. These temporary travelways are considered part of the pit due to their short term use, and are not individually designed nor engineered. They will be built and maintained to facilitate safe and efficient mine and reclamation operations. On the North Private Lease area, topsoil and approved subsoil will be removed and salvaged for all surface mining areas and roadways as they are developed according to the plan and methods described in Chapter 2 Section 231 and Section 523 of this chapter and shown on Drawing 2-4.

521.180. Support facilities.

Description of the support facilities is provided in Section 526.220. Drawings 5-3, ~~5-3B,~~ 5-4, 5-5, 5-6, 5-7, 5-8, 5-8A, 5-8B, 5-8C, and 5-47, provide the maps, appropriate cross-sections, design drawings and specifications to demonstrate compliance with R645-301-526.220 through R645-301-526.222 for each facility.

521.200. Signs and Markers Specifications.

Signs and markers will be posted, maintained, and removed by Alton Coal Development LLC. Signs and markers will be a uniform design that can be easily seen and read; made of durable material; conform to local laws and regulations, and be maintained during all activities to which they pertain;

521.240. Mine and Permit Identification Signs.

Identification signs showing the name, business address, and telephone number of Alton Coal Development LLC and the identification number of the permanent program permit authorizing coal mining and reclamation operations will be displayed at each point of access to the permit area from public roads, and will be retained and maintained until after the release of all bonds for the permit area;

521.250. Perimeter Markers.

The perimeter of a permit area will be clearly marked with fencing before the beginning of surface mining activities. The perimeter of all permitted and bonded surface disturbance areas will also be clearly marked with signage stating "disturbance boundary."

The perimeter of the surface disturbance associated with Pit B-1 will be clearly marked prior to disturbance activities. Additionally, cultural resource sites will be demarcated, monitored and barricaded according to the practices detailed in chapter 4.

521.260. Buffer Zone Markers.

Buffer zones will be marked along their boundaries as required under 731.600

521.270. Topsoil Markers.

Markers will be erected to mark where topsoil or other vegetation - supporting material is physically segregated and stockpiled.

522. **COAL RECOVERY**.

The MRP is designed to maximize recovery of the coal resource within technological, safety and legal limitations. Coal will be recovered from the Smirl Seam which ranges in thickness from 11.0 to 18.5 feet averaging approximately 16 feet in the planned mining area. The Smirl Seam is the only surface mineable seam in the permit area. Isopach maps of the coal thickness and strip ratio can be viewed on Drawings 5-13 and 5-14 for the Coal Hollow Mine and Drawings 5-54 and 5-55 for the North Private Lease.

Some coal along the boundaries of the mine area will not be recovered in conjunction with the proposed operation. This includes coal underlying the pit highwalls and areas where drainage or sedimentation control structures (diversions, ditches, ponds, etc) are located. The mine is designed to minimize such losses by locating haulage ramps in the spoil rather than on the pit wall, by oversteepening the coal face at the pit edges, and by minimizing the use of out of pit ancillary roads. Coal which is left in place in these areas may be recovered in the future when adjacent property rights are secured. Current plans are for a planned maximum mining depth of approximately 200 ft. and a strip ratio of 10:1; however, the ultimate mining depth will depend on cost related factors.

Additional coal (shown on Drawing 5-9 and Drawing 5-10 as Pit B-1) at the Coal Hollow Mine will also be encountered incident to reclamation and borrow activities where it would not have been practical to mine otherwise. This coal will be surface mined. Coal mined in Pit B-1 will be extracted to an extent that protects eventual regrading and reclamation efforts in the Borrow Area from potential oxidation, heating, or spontaneous combustion.

A detailed mine plan has been developed for the proposed permit area and the following tables for each area along with Drawing 5-9 for the Coal Hollow Mine and Drawing 5-52 for the North Private lease summarize the coal extraction for the permit area for the open pit mining, highwall mining and underground mining:

Existing Coal Hollow Mine – Fee Coal

Description	Extraction Status	Average Coal Thickness (ft)	Average Strip Ratio* (yd^3/Ton)	Quantity (**Ton)
Total Coal within Permit Boundary	N/A	16.3	7.7	12,092,000
High Strip Ratio Area (NE corner of permit area)	Not Mined	16.0	13.5	3,856,100
Coal under highwalls and sedimentation structures	Not Mined	17.2	4.8	3,116,100
Coal under Robinson Creek Diversion	Not Mined	15.5	3.9	235,200
Highwall & Underground	Not Mined	16.0	0	1,463,900
Recoverable Coal (Surface)	Mined	16.3	6.4	3,225,900
Recoverable Coal (Underground)	Mined	16.0	0	54,500

*All strip ratios are bank cubic yards of overburden to tons of coal
**All coal tons are based on a 95% recovery factor for open pit mining and 45% for highwall mining and the underground mining.

Existing Coal Hollow Mine – Federal Coal

Description	Extraction Status	Average Coal Thickness (ft)	Average Strip Ratio* (yd^3/Ton)	Quantity (**Ton)
Total Coal within Permit Boundary	N/A	16.3	7.7	5,664,100
Coal Not Yet Permitted	Not Mined	16.0	13.5	4,329,800
Coal under highwalls and sedimentation structures	Not Mined	17.2	4.8	0
Coal under Robinson Creek Diversion	Not Mined	15.5	3.9	0
Highwall & Underground	Not Mined	16.0	0	143,500

Recoverable Coal (Surface)	Mined	16.3	6.4	1,135,200
Recoverable Coal (Underground)	Mined	16.0	0	0

*All strip ratios are bank cubic yards of overburden to tons of coal
**All coal tons are based on a 95% recovery factor for open pit mining and 45% for highwall mining and the underground mining.

North Private Lease

Description	Extraction Status	Average Coal Thickness (ft)	Average Strip Ratio* (yd^3/Ton)	Quantity (**Ton)
Total Fee Coal within Permit Boundary	N/A	15.4	4.5:1	7,127,300
Coal under highwalls and sedimentation structures	Not Mined	15.1	10.1:1	2,201,700
Highwall	Not Mined	15.2	0	1,514,900
Highwall	Mined	15.2	0	530,200
Open Pit	Mined	15.6	6.0:1	2,880,500
Total Recoverable Coal (Surface)	Mined	15.5	4.6:1	3,410,700

*All strip ratios are bank cubic yards of overburden to tons of coal
**All coal tons are based on a 95% recovery factor for open pit mining and 35% for highwall mining.

Once approval is received to progress with mining on the adjacent federal coal reserves outside of the current permit areas, an additional percentage of the coal under the highwalls will be recovered as part of the progression into these adjacent reserves.

With open pit mining, the application of highly flexible, open pit truck/shovel techniques will minimize losses of coal due to pit geometry or spoil support requirements, allowing the maximum possible exposure of the coal resource. The full seam section will be loaded primarily using large hydraulic backhoes. The backhoes, which can work from the top of the seam, provide the ability to efficiently and cleanly excavate the lower part of the coal seam without disturbing the pit floor. This, along with the machine's high degree of bucket horizon control will minimize floor losses. The backhoes can also work safely from the top of the seam to over steepen the loading face along the pit walls, thus recovering the maximum amount of coal.

Where pit geometry or operational factors preclude the use of backhoes for loading, a large rubber tire front end loader will be used. These machines provide similar horizon control, can operate on the floor of the pit or on an intermediate bench, and can recover coal from confined areas such as the ends of the pits.

With the highwall miner (See Chapter 9 which addresses R645-302 regulations), the application of a highwall mining system will be employed to recover coal from the exposed face. In this method of mining, an unmanned cutter module is driven underground and operated in front of the highwall. The highwall mining machine stands on the pit floor or on a bench, directly in front of the exposed seam and makes long parallel rectangular drives into the coal seam. A remote-operated cutter module is pushed into the seam by a string of push beams (unmanned coal-conveying elements) that transport the mined coal back to the entry of the drive onto a stockpile.

The underground mining will utilize standard extraction methods. These will include a continuous miner, shuttle cars and a conveyor system to the surface. The mine plan calls for first mining only to prevent subsidence. Coal brought to the surface will flow to a stacking conveyor and stockpile. ~~as shown on Drawing 5-3B.~~

The limited extraction, first-mining only and compliance with the recommendations in the Norwest Report (Appendix 5-9) will ensure access in the event the portals should need to remain open for future underground operations.

For the Coal Hollow Mine, rear dump haul trucks, loaded by the backhoes or front end loader, will be used to move the coal from the pit via inpit roads and the primary haulroad to the crusher and stockpile. The trucks will be equipped with “combo” beds suitable for hauling both coal and overburden, and configured to minimize coal spillage. For the North private Lease, over-the-road trucks, loaded by the backhoes or front end loader, will be used to move the coal from the pit via inpit roads and the primary haulroad to the Coal Hollow Mine crushing facility. For the initial cut, coal waste will be temporarily pushed into a pile on top of unmined coal until enough coal has been removed to place the coal waste on the floor of the pit.

A net recovery of 95% (including the effects of in-pit coal losses and out-of-seam dilution) of the coal exposed in the open pit is anticipated. A net recovery of 45% of the coal mined by the highwall system (See Chapter 9 which addresses R645-302 regulations) as well as the underground mining is anticipated. Normal coal losses are expected due to cleaning of the top of the seam, loading losses at the seam floor, and coal oxidation near the outcrop.

No coal washing is contemplated at this time, thus there will be no coal processing losses.

Maps and cross sections providing detailed information related to coal recovery activities can be viewed on Drawings 5-9 through 5-14 for the Coal Hollow and on Drawings 5-52 through 5-55 for coal recoveries at the North Private Lease.

523. **MINING METHOD(s).**

The Coal Hollow Mine will be a combination coal mining operation, utilizing open pit mining, highwall mining (See Chapter 9 which addresses R645-302 regulations) and underground mining methods. Primary mining equipment will include hydraulic excavators, a highwall miner, standard underground mining equipment including a

continuous miner, shuttle cars and conveyor system, and end-dump mining trucks. The coal will be crushed at the mine site, and hauled to market in over-the-road coal trucks.

The Coal Hollow Mine is planned to produce approximately 4.5 million tons of coal over a life of approximately 11 years. The estimated production schedule is summarized below:

Production Schedule		
		Tons Produced
Year		(000)
2011		542
2012		505
2013		568
2014		607
2015		498
2016 - Surf		118
2016 – UG		55
2017		0
2018		0
2019		714
2020		872
Total		4,478

Initial mine development will involve removal and storage of topsoil from mine infrastructure locations. Facilities for equipment maintenance/warehouse, coal handling, and offices will be constructed. During the development and initial mining period, facilities temporary in nature may be used until permanent facilities can be built. Construction of sedimentation ponds, diversion ditches, and mine roads accessing the initial mining areas will also be ongoing.

Mining will employ typical open pit methods using truck/loader type equipment to remove overburden and recover the coal. Mining will advance across the property in successive cuts approximately 250 ft. in width and 800 to 1,300 ft. long (generally equal to the width of the property less property barriers). Layout of these pits can be viewed on Drawing 5-10. Drawing 5-10 has been modified from the original layout to accommodate modifications to the plan for highwall mining, underground mining and anomalies encountered in the coal (large sand channels), thus the non-sequential numbering of the pits. The overburden will be removed in layers or lifts approximately 20 to 40 feet deep. In practice, these overburden lifts are mined in a stairstep fashion ahead of the coal removal operation to provide adequate working room for the equipment and stable advancing slopes. Once mining is complete, excavated overburden (spoil) from a successive cut is used to backfill the excavation. General cross sections of this process can be viewed on Drawings 5-11 and 5-12.

Prior to beginning mining, the area will be cleared of vegetation, and the topsoil will be recovered and either stockpiled or live hauled to regraded areas. It is not anticipated that blasting of the overburden will be necessary based on drilling data. Should this process become necessary, this is the phase where it would be implemented. Overburden will then be removed using large hydraulic excavator(s) or front end loaders and off-road trucks which will haul the spoil and place it in parts of the pit where the coal has been removed, or in the excess spoil area shown on Drawing 5-3. Overburden is removed in successively deeper benches until the coal seam is exposed. Some overburden in lower lifts may be moved by direct dozing into the mined out pit by large bulldozers.

When overburden removal is finished in a particular pit, the top of the coal will be cleaned (removal of any roof rock or other non-coal material on top of the seam) using a motor grader, dozer or front end loader. The material removed will be placed in the adjacent mined out pit. For the open pit mined coal, if necessary, the coal seam will be loosened by drilling and blasting or ripping prior to loading. Drilling and blasting of the coal is not expected to be necessary. The cleaned, exposed coal is then excavated by backhoe or front end loader and placed into off-road rear dump trucks. Coal mined with a highwall miner would not require blasting.

Once the coal is removed, the pit will be backfilled by spoil from adjacent mine pits. Spoil will be placed in lifts and spread with a dozer. Once the pit is backfilled to the planned final surface contour, suitable topsoil and subsoil will be replaced, and the area reseeded. Revegetation work will proceed seasonally as appropriate for planting.

Overburden excavation and coal mining at Coal Hollow will begin near the subcrop of the coal seam at the western end of the permit area in the NW ¼ NE ¼ of Section 30, T39S, R5W. Topsoil will be removed and stored separately in topsoil stockpiles as shown on Map 2-2. Overburden from the initial pits will be hauled to the excess spoil pile east of the mining area. Once the initial pits are established, as much spoil as possible will be placed directly in the pit backfill, allowing reclamation to closely follow mining. This initial phase includes pits 1 through 9 as shown on Drawing 5-10.

From the initial mining area, operations will proceed from the southeast ¼ of Section 30, beginning with pit 28 and proceeding north to pit 22. Pit 9 will not be backfilled at this stage; it has been left open for placement of the highwall miner to recover coal from panels 1-3. In hole 27 of Pit 9 Panel 3, the highwall miner head became lodged. Another head was leased in order to continue highwall mining in pits 22 and 23 while a recovery plan was approved to mine Pit 10 and recover the lodged miner head. Pit 21 was then mined along the highwall panels in 21, then Pit10. Pits F-7 and F-8 will remain open for potential development of the underground portals and remain open until all underground coal is mined or a subsequent amendment details another location for underground portals. Surface mining will continue with mining of Highwall Trench (HWT) 1 continuing south to HWT 3.

Pit B-1 at the Coal Hollow Mine will be encountered incident to reclamation and borrow activities where it would not have been practical to mine otherwise. This resource is

estimated at 118,000 tons and has been fully mined and immediately backfilled (to the intermediate landform shown in Drawings 5-35 and 5-36) in 2016. The coal will be surface mined utilizing the same equipment and methods as the previous pits and will be extracted to an extent that protects eventual regrading and reclamation efforts in the Borrow Area from potential oxidation, heating, or spontaneous combustion. Mining of Pit B-1 will begin by dozing a thin layer (apx. 5 ft) of overburden covering the eastern extent of Pit B-1 from east to west in a strip 50 to 100 ft wide to create a temporary overburden berm. The coal underneath this first strip will then be extracted leaving a void into which the berm and subsequent strip overburden can be placed. The coal strips will progress from east to west, with dozing and potentially truck haulage replacing the stripped overburden into the coal voids from west to east. Mining slopes will be maintained at a 1:1 face angle for mining benches under 50 ft. Above 50 ft., a 40 ft. catch bench will be installed between 40 ft. 1:1 benches. Additional fill material will be sourced from the adjacent pit slopes as necessary to establish the final 3:1 slope on the South pit wall and to meet the intermediate design surface depicted in Drawings 5-35 and 5-36.

Following approval of the Federal LBA and acquisition of necessary leases, mining will continue into pits 10-B and Pits F-1 to F-8 as shown on Drawings 5-10 and 5-16. These pits will be mined with the same methods described above and will progress from South to North while directly backfilling to the South. At no point during the development and extraction of Pits 10-B to F-8 will overburden removal extend beyond the Tropic Shale ridge located directly to the east of these pits. Coal extraction via underground mining or highwall mining may extend under and beyond this ridge, but overburden removal would result in potential impacts to the groundwater aquifer and would first require an update to the PHC document included as an appendix to Chapter 7 of this MRP. Mining and concurrent backfill of Pits 10-B to F-8 will result in the backfill of the current underground portal area, so that as mining finishes in Pit F-8 the pit will be left open in anticipation of development of another portal with the borrow area serving to provide eventual backfill. As permitting of the larger LBA continues, subsequent amendments will address the final location of the portal pad and further plans for underground mining as well as any potential changes to backfill sourcing.

The North Private Lease will be a combination coal mining operation, utilizing open pit mining, and highwall mining. Primary mining equipment will include hydraulic excavators, a highwall miner, and end-dump mining trucks. The raw coal will be mined from the open pits and loaded to over-the-road coal trucks and delivered to the Coal Hollow Mine for crushing then hauled to market in over-the-road coal trucks.

The North Private Lease is planned to produce approximately 3.4 million tons of coal over a life of approximately 6 years. The estimated production schedule is summarized below:

Production Schedule		
		Tons Produced
Year		(000)
1		531

2		724
3		586
4		536
5		525
6		345
7		165
Total		3,411

Initial mine development will involve removal and storage of topsoil from mine infrastructure locations. Construction of sedimentation ponds, diversion ditches, and mine roads accessing the initial mining areas will also be ongoing. See chapter 2, section 231.100 and Drawing 2-4 for topsoil handling methods, quantities, and plans. For the North Private Lease prior to mining Pit 1 the following steps will be followed:

1. The A horizon (topsoil) will be salvaged along with B horizon (subsoil) to a depth of 14 inches (1.2 feet) from all active mining areas (pits, ponds, roadways, haul roads, storage and repair yards, etc.). The only exception is that topsoil can remain under topsoil storage piles.

2. For the area inside the excavation perimeter of Pit 1, Pond 5 and Pond 6, the remaining subsoil (the B & C horizon above lithic contact, approximately 2.6 feet) will also be removed and stockpiled in a subsoil stockpile. This means that roadways and the subsoil and spoil piles depicted in Drawing 2-4 will be placed on top of native subsoil. This native subsoil will be protected in place beneath the spoil stockpile by using a marker fence to delineate the subsoil surface on 100 ft. centers and by using a gps survey grid of the topography of the subsoil surface layer. The native subsoil will be protected in place on any roadway receiving surface treatment (ie. Gravel, additional fill) by placing marker fence along the roadway centerline. The native subsoil will then be recovered as part of the subsequent mining sequence and placed directly over regraded backfill to the cover depth required in section 232.

4. A soil scientist will monitor the topsoil and subsoil removal and placement of geomarker.

5. A surveyor will map the surface elevation of the subsoil being protected in place.

Area 1 expanded increases Area 1 by 17.89 acres, all topsoil and subsoil will be salvaged and stockpiled as mining of Pits 7, 8 and 9 progress. Stockpile locations are shown and volumes tabulated for on Drawing 2-4. These stockpiles will remain and be utilized for final reclamation of the last pits mined.

As with the Coal Hollow Mine, topsoil and subsoil will be removed with dozers and/or scrapers to a depth determined by the soil scientist.
Mining will employ typical open pit methods using truck/loader type equipment to remove overburden and recover the coal. Mining will advance across the property in

successive cuts approximately 200 ft. in width and 500 to 1,300 ft. long. Layout of these pits can be viewed on Drawing 5-53. The overburden will be removed in layers or lifts approximately 20 to 40 feet deep. In practice, these overburden lifts are mined in a stair step fashion ahead of the coal removal operation to provide adequate working room for the equipment and stable advancing slopes. Once mining is complete, excavated overburden (spoil) from a successive cut is used to backfill the excavation. General cross sections of this process can be viewed on Drawings 5-11 and 5-12.

Following initial construction and prior to beginning mining of each pit, the area will be cleared of vegetation, and the topsoil will be recovered and either stockpiled or live hauled to regraded areas. Blasting of the overburden will then be performed according the plan and methods outlined in Section 524 of this chapter and Appendix 5-4. Overburden will then be removed using large hydraulic excavator(s) or front end loaders and off-road trucks which will haul the spoil and place it in parts of the pit where the coal has been removed, or in the temporary spoil area shown on Drawing 5-47. Overburden is removed in successively deeper benches until the coal seam is exposed. Some overburden may be moved by direct dozing into the mined out pit by large bulldozers.

When overburden removal is finished in a particular pit, the top of the coal will be cleaned (removal of any roof rock or other non-coal material on top of the seam) using a motor grader, trackhoe, dozer or front end loader. The material removed will be placed in the adjacent mined out pit. For the open pit mined coal, if necessary, the coal seam will be loosened by drilling and blasting or ripping prior to loading. Drilling and blasting of the coal is not expected to be necessary. The cleaned, exposed coal is then excavated by backhoe or front end loader and placed into over-the-road trucks. Coal mined with a highwall miner would not require blasting.

Once the coal is removed, the pit will be backfilled by spoil from adjacent mine pits. Spoil will be placed in lifts and spread with a dozer. Once the pit is backfilled to the planned final surface contour, suitable topsoil and subsoil will be replaced, and the area reseeded. Revegetation work will proceed seasonally as appropriate for planting.

Overburden excavation and coal mining at the North Private Lease will begin near the subcrop of the coal seam at the southwestern end of the permit area in the SW ¼ NW ¼ of Section 13, T39S, R5W. Topsoil will be removed and stored separately in topsoil stockpiles as shown on Map 2-4. Overburden from the initial pit 1 and southern half of 2 will be hauled to the temporary excess spoil pile located on the future pits 3, 4 and 5. Once the initial pit is established, as much spoil as possible will be placed directly in the pit backfill, allowing reclamation to closely follow mining. As mining progresses to Pit 3, material from the temporary excess spoil pile can be rehandled to be placed in the mined out void. As mining proceeds from pit 5 to pit 10 all spoils mined is placed into pit backfill. This initial phase includes pits 1 through 10 as shown on Drawing 5-53. Depending on the timing of approval for Areas 2 and 3, mining in the extension of Area 1 (which contains Pits 7, 8 and 9) may be limited as shown in Drawing 5-57 by Pond T1 and the geologic contact between Tropic Shale and Quaternary Alluvium in Pits 8 and 9. Pond T1 must remain in place until Pond 7 has been constructed and no alluvium will be

mined until the hydrologic analysis of Areas 2 and 3 has been performed and approved. Once these approvals are obtained, the Area 2 facilities will be constructed and Pond T1 and the other Area 1 extension facilities will be mined out by advancing pits.

From the initial mining area, operations will proceed to the North from Pit 11 to Pit 21. All spoils are placed in the proceeding void or in the NW temporary spoil stockpile. Once coal is removed from Pit 21, overburden above the final landform depicted on drawing 5-74 from the adjacent backfilled pits and the NW temporary spoil pile will be used to backfill the remaining Pit 21.

The final mining area will be developed on the East side of Kanab Creek. Overburden from Highwall Trench 1 will proceed north in the trench with overburden being placed into the previously mined out area. Backfill for the final Highwall Trench will come from the temporary overburden stockpiles.

Alton Coal Development, LLC is currently in the process of an Environmental Impact Study for Federal Reserve's adjacent to the private mining areas known as the LBA. It is expected that these rights will be acquired prior to the completion of the final phase in the proposed Permit Area. Also, if acquired, ~~Pit 10 along with the~~the open pit containing the underground portals will remain open to access underground coal within the LBA. The final landform for Coal Hollow Mine is shown on Drawings 5-37 and 5-37A. The final landform for the North Private Lease is shown on Drawings 5-74 and 5-75. In the case where borrow from the area east of Kanab Creek is not necessary, the material void will not occur and post-mining topography will achieve AOC while closely mirroring original topography as shown on Drawing 5-45. As borrow from this area East of Kanab Creek is unlikely, bond coverage for disturbance and mining of this area has been sterilized. Any planned disturbance in this area would require recalculation of the bond and an amendment to the MRP.

An estimate of the primary mining equipment planned for use at the Coal Hollow Mine and North Private Lease is listed below:

Diesel - Hydraulic Excavators (15 to 38 cu. yd. capacity)
Highwall Mining System (CAT HW300 or equivalent)
Rubber Tired Front End Loaders (8 to 20 cu. yd. capacity)
End Dump Trucks (100 to 240 ton capacity class)
Track Dozers (Caterpillar D7 through D11 Class)
Motor Graders (Caterpillar 16H to 24H Class)
Water Trucks (8,000 to 20,000 Gallon Class)
Underground miner and associated equipment

A variety of other equipment will also be used to support the mining operation.

Proposed engineering techniques for meeting the proposed mining methods will include:

- Design support for roads, pits, sediment impoundments etc…
- Field staking of designs utilizing high precision GPS survey systems.

- Weekly field engineering support to view and provide guidance related to designs and environmental controls.
- Ongoing geotechnical support for ensuring highwall stability
- As additional information becomes available, update geological models to ensure full recovery of resource.
- Weekly mine plans that specify appropriate engineering and environmental specifications.

  There are no known underground mines within 500 feet of the permit boundary. No surface mining or reclamation activities are proposed to take place within 500 feet of the underground mine.

524. **BLASTING AND EXPLOSIVES**

Explosives will be utilized as necessary at Coal Hollow Mine and the North Private Lease to break the overburden over the coal and may be used to break the coal for loading if necessary. In accordance with the requirements of this section, a blasting plan is provided to the Division in Appendix 5-4. Blasts that use more than five pounds of explosives or blasting agents will be conducted according to the schedule provided in R645-301-524..

524.100 Blaster Certification

Alton Coal Development, LLC (ACD) will, prior to conducting any surface blasting operations, ensure that all surface blasting incident to surface mining in Utah is conducted under the direction of a Utah Certified Blaster. Blaster certifications will be carried on the person of the Certified Blaster and copies of the Blasting license(s) will be on file at the mine. A blaster and at least one other person will be present at the firing of a blast.

The Certified Blaster will be responsible for blasting operations at the blasting site, will be familiar with the blasting plan and site-specific performance standards, and give on-the-job training to persons who are not certified and who are assigned to the blasting crew or assist in the use of explosives.

524.200 Blast Design

There are no dwellings, public buildings, schools, churches, or community or institutional building within 1,000 feet of the planned blasting area for either the Coal Hollow Mine or the North Private Lease. There are also no historic underground mines within 500 feet of either of the permit areas.

Overburden shot size is generally 450x200 ft or 200,000 cubic yards. A typical overburden blast design has a burden and spacing of 18x18ft at a depth of 60ft. Stemming height is typically 13 ft. Shots will be loaded with Ammonium Nitrate Fuel Oil (ANFO) in dry holes, and packaged emulsion on wet holes. Average pounds per hole will be 833 lbs. Powder Factors can range from .4 lbs/cyd to 1.25 lbs/cyd depending on geology. Each hole will have at least one booster (0.75 lb or 1 lb) and a 25/500ms nonel cap, as shown in Figure 1 of Appendix 5-4.

Timing will typically be 25 ms between holes with 84 ms between rows, and follow the pattern shown in Figure 2 of Appendix 5-4.

The closest structure to any blast pattern for the Coal Hollow Mine is the Richard Dame (Swapp Ranch) property at 1,585 ft. from the closest blast pattern. For the North Private Lease, the nearest structures (a pole barn and a fish pond with an earthen dam) are located on property owned by Heaton Brothers LLC, at least 2032 ft. away (See Drawing 1-7 for measured distances). The required scaled distance is 55 for Coal Hollow Mine and 55 for the North Private Lease per 524.640 – 662. Based on these scaled distances, the maximum pounds of explosives per 8 ms delay is 2,066 lbs for the Coal Hollow Mine and North Private Lease respectively.

The above blast design, loading, and timing are general designs for the mine and may be altered due to geology, mine design, production needs, and blast optimization.

Blasts conducted within 1000 ft. of a dwelling, public building, school, church, or community or institutional building will be submitted for Division and MSHA approval, prior to blasting. The blast design and shot report will contain sketches of the drill and delay patterns, decking, type and amount of explosives required per blast, critical dimensions, design factors utilized to protect the public, general location drawings of protected structures, which meet the applicable airblast, flyrock, and ground vibration standards in 524.600.

The blast design and shot report will be prepared and signed by a Utah certified blaster. Records documenting blasting operations will be maintained at the mine site for at least three years and upon request will be made available to the Division upon request. These records will include all information as required in R645-301-524.700. The contractor will also keep blasting records for at least 3 years at the contractors' site office.
See Appendix 5-4 Section 4 for a blank shot report and Section 1H for a typical blast design.

524.300 - 350 <u>Preblasting Survey</u>

A preblasting survey will be conducted prior to commencement of blasting operations. As part of the preblasting survey Alton Coal Development LLC will:

- Notify, in writing, all residents or owners of dwellings or other structures located within one-half mile of the permit area how to request a preblasting survey at least 30 days before initiation of blasting.
- Prepare a written report of any preblasting survey. A resident or owner of a dwelling or structure within one-half mile of any part of the permit area may request a preblasting survey. This request will be made, in writing, directly to Alton Coal Development LLC or to the Division, who will promptly notify Alton Coal Development LLC. Alton Coal Development LLC will promptly conduct a preblasting survey of the dwelling or structure and promptly prepare the written report. An updated survey of any additions, modifications, or renovation will be performed by Alton Coal Development LLC if requested by the resident or owner.
- Determine the condition of the dwelling or structure and will document any preblasting damage and other physical factors that could reasonably be affected by the blasting. Structures such as pipelines, cables, transmission lines, and cisterns, wells, and other water systems warrant special attention; however, the assessment of these structures may be limited to surface conditions and other readily available data.
- Require the written report of the survey be signed by the person who conducted the survey. Copies of the report will be promptly provided to the Division and to the person requesting the survey. If the person requesting the survey disagrees with the contents and/or recommendations contained therein, he or she may submit to both Alton Coal Development LLC and the Division a detailed description of the specific areas of disagreement.
- Complete any survey requested more than ten days before the planned initiation of blasting, before blasting occurs.

Preblasting surveys were conducted for the Swapp Ranch and the Darlynn Sorensen residence on August 23, 2011 for the Coal Hollow Mine.

There are no residences within ½ mile of the North Private Lease requiring a preblasting survey. However, a preblasting survey will be offered to each of the owners of the five land parcels with structures in Alton Town that are nearest to the Northwest corner of the lease boundary. These parcels and ownership are depicted on Drawing 1-7 along with measured distances. Also shown on Drawing 1-7, there are two structures, a Pole Barn and a Fish Pond with an earthen dam, located on property owned by Heaton Brothers LLC that are both within the ½ mile limit of Permit Area 1. Preblasting surveys will be offered and conducted for each of these structures prior to any blasting operations for Permit Area 1.

524.400 Blasting Schedule

Blasting will typically take place approximately once every 1.5 weeks, with adjustments made for production, weather, and the mine's or contractor's schedule.

524.410. Unscheduled Blasts

Unscheduled blasts will be conducted only where public or operator health and safety so requires and for emergency blasting actions. When an unscheduled surface blast incidental to coal mining and reclamation operations is conducted, Alton Coal Development LLC, using audible signals (see section 524.500-532 for blasting signals), will notify residents within one-half mile of the blasting site and document the reason on the shot report in accordance with 524.760

Also, for unscheduled blast in the Coal Hollow Mine, Darlynn Sorensen, and Richard Dame will be notified. Within the North Private Lease there are no residents within a ½ mile radius that require notification.

524.420. Timing of Blasting

All blasting will be conducted between sunrise and sunset unless nighttime blasting is approved by the Division. Alton Coal Development LLC will conduct blasting operations at times approved by the Division and announced in the blasting schedule.

524.450 - 453. Blasting Schedule Publication and Distribution.

Alton Coal Development, LLC will:

- Publish the blasting schedule in a newspaper of general circulation in the locality of the blasting site at least ten days, but not more than 30 days, before beginning a blasting program;
- Distribute copies of the schedule to local governments and public utilities and to each local residence within one-half mile of the proposed blasting site described in the schedule; and
- Republish and redistribute the schedule at least every 12 months and revise and republish the schedule at least ten days, but not more than 30 days, before blasting whenever the area covered by the schedule changes or actual time periods for blasting significantly differ from the prior announcement.

A copy of the public notice is included in Appendix 5-4 as Exhibit 1

524.460 - 465. Blasting Schedule Contents.

The blasting schedule will contain, at a minimum:

- Name, address, and telephone number of operator;
- Identification of the specific areas in which blasting will take place;
- Dates and time periods when explosives are to be detonated;
- Methods to be used to control access to the blasting area; and
- Type and patterns of audible warning and all-clear signals to be used before and after blasting.

A copy of the public notice is included in Appendix 5-4 as Exhibit 1

524.500 - 532 Blasting and Warning Signs, Access Control

Blasting signs will read **"Blasting Area"** and be conspicuously placed along the edge of any blasting area that comes within 100 feet of any public right-of-way, and at the point where any other road provides access to the blasting area. At all entrances to the mine permit area from public roads or highways, signs will be conspicuously placed which read **"Warning! Explosives in Use"**, clearly list and describe the meaning of the audible blast warning and all-clear signals in use, and explain the identification of blasting areas where charged holes await firing at the blasting site in the mine permit area.

Warning and all-clear signals of different character or pattern that are audible within a range of one-half mile from the point of the blast will be given. Each person within the permit area and each person who resides or works regularly within one-half mile of the blast site in the mine permit area will be notified of the meaning of the signals in the blasting schedule and notification.

Prior to blasting, all persons will be evacuated from the blasting zone and guards will be posted at the entrance of the blasting area. When blasting in the North Private Lease, blockers will also be placed on County Road 136 (K3900) west of the permit boundary at least 1000 feet from the nearest blast hole to restrict public access into the blasting zone. The exact blocker location will be determined by the blaster at the pre blast safety meeting. A typical blast sequence will be the following:

- 30 minute warning – Blast announced over all Coal Hollow Mine or North Private Lease radio channels.
- 15 minute warning – Blast once again announced over all Coal Hollow Mine or North Private Lease radio channels. Guards are placed at the entrance of the blasting area and the pit is cleared.
- 5 minute warning – Guards blocking all access, pit cleared, access to the blasting area blocked, radio silence required and siren activated. Siren will be three prolonged wales.
- 1 minute warning – A series of short siren wales
- Countdown to ignition @ 5,4,3,2,1 – Announced across Coal Hollow Mine or North Private Lease radio channels
- All clear signal – One prolonged siren wale

A post blast inspection will be conducted by the qualified blaster and/or foreman prior to clearing the area. All guards will remain at their assigned positions until the blast area has been cleared by the qualified person.

The post blast inspection will include an examination of faces and/or muck piles associated with the blasting operation.

Access within the blasting areas will be controlled to prevent presence of livestock or unauthorized persons during blasting and until the Certified Blaster has reasonably determined that no unusual hazards exist, such as imminent slides or un-detonated charges; and access to and travel within the blasting area can be safely resumed.

524.600 - 610 Adverse Effects Of Blasting

Blasting will be conducted to prevent injury to persons, damage to public or private property outside the mine permit area, and changes in the course, channels, or availability of surface or ground water outside the mine permit area by following industry best practices, limits, and regulations

524.620 Airblast Limits

Airblast will not exceed the maximum limits listed below at the location of any dwelling, public building, school, church, or community or institutional building outside the mine permit area, except for those structures and facilities owned by Alton Coal Development LLC as approved by the Division. Maximum airblast limits are as follows:

Lower Frequency Limit of Measuring System, HZ (+3dB)		Maximum Level dB
2 Hz or lower – flat response		133 peak

(1)

524.630. Monitoring:

Periodic monitoring will be conducted once per quarter, unless there are no blasts, to ensure compliance with the airblast standards. Airblast measurements will be taken as required by the Division at locations specified by the Division. The measuring system used will have an upper-end flat frequency response of at least 125 Hz.

The first blast in the North Private Lease will be monitored from the earthen dam of the pond located to the west of the lease on Heaton Brothers LLC property and from a location approximately 2500’ away from the blast along County Road 136 (K3900). The Division will be notified prior to the first blast taking place to provide the Division with their own opportunity to conduct monitoring activities. Following the first blast, each of the subsequent blasts in Permit Area 1 will be monitored from the earthen dam of the pond mentioned above until blasting activities are no longer within ½ mile of the structure. Periodic (quarterly) monitoring will then continue through Permit Area 2 until mining commences in Pit 20 (Shown in Drawing 5-57). Each blast in Pits 20 and 21 will be monitored from the nearest Alton Town structure located on Parcel A-B-23-2 (Shown

on Drawing 1-7). Subsequent blasting activities in Permit Area 3 will be monitored periodically (quarterly).

524.633. Flyrock:

Flyrock traveling in the air or along the ground will not be cast from the blasting site more than one-half the distance to the nearest dwelling or other occupied structure; beyond the area of blasting access control or beyond the mine permit area boundary. Each shot will be recorded to ensure flyrock falls within the limits described above. If flyrock occurs, it will be documented on the shot report in the comments section.

524.640 - 662. Ground Vibration.

In all blasting operations, except as otherwise authorized by the Division, the maximum ground vibration will not exceed the values approved by the Division. The maximum ground vibration for protected structures will be in accordance with the maximum peak-particle velocity limits. All other structures in the vicinity of the blasting area such as water towers, pipelines and other utilities, tunnels, dams, impoundments, and underground mines will be protected from damage by establishment of a maximum allowable limit on the ground vibration. These limits will be submitted by Alton Coal Development LLC and approved by the Division prior to blasting. A seismographic record will be provided for each blast if protected structures are within 2500 ft of the blast. If no protected structures are within the 2500 ft limit, periodic monitoring will be conducted once per quarter, unless there are no blasts, to ensure compliance with the ground vibration limits. In the event a scaled distance less than 55 or PPV greater than 1.00 in/s is anticipated in the blast design, Maximum Peak Particle Velocity Method and Scaled Distance Equation Method will be used to monitor.

The first blast in the North Private Lease will be monitored for ground vibration from the earthen dam of the pond located to the west of the lease on Heaton Brothers LLC property and from a location approximately 2500’ away from the blast along County Road 136 (K3900). The Division will be notified prior to the first blast taking place to provide the Division with their own opportunity to conduct monitoring activities. Following the first blast, each of the subsequent blasts in Permit Area 1 will be monitored from the earthen dam of the pond mentioned above until blasting activities are no longer within ½ mile of the structure. Periodic (quarterly) monitoring will then continue through Permit Area 2 until mining commences in Pit 20 (Shown in Drawing 5-57). Each blast in Pits 20 and 21 will be monitored from the nearest Alton Town structure located on Parcel A-B-23-2 (Shown on Drawing 1-7). Subsequent blasting activities in Permit Area 3 will be monitored periodically (quarterly).

Maximum Peak-Particle Velocity Method: The maximum ground vibration will not exceed the following limits at the location of any dwelling, public building, school, church, or community or institutional building outside the mine permit area in accordance with the following:

Distance (D) from Blast Site in feet	Maximum allowable Particle Velocity (Vmax) for ground vibration, in inches/second (1)	Scaled distance factor to be applied without seismic monitoring (Ds) (2)
0 to 300	1.25	50
301 to 5,000	1.00	55
5,001 and beyond	0.75	65

(1) Ground vibration will be measured as the particle velocity. Particle velocity will be recorded in three mutually perpendicular directions. The maximum allowable peak particle velocity will apply to each of the three measurements.
(2) Applicable in the scale-distance equation of 524.651.

For the North Private Lease, as no structure resides within 300 feet of any planned blasting activity, all blasts will be designed and monitored to a threshold Peak-Particle Velocity of 1.00 inches/second.

524.690. Standards not Applicable

The maximum airblast and ground-vibration standards of 524.620 through 524.632 and 524.640 through 524.680 will not apply at the following locations: At structures owned by Alton Coal Development LLC and not leased to another person; and at structures owned by Alton Coal Development LLC and leased to another person, if a written waiver by the lessee is submitted to the Division before blasting.

524.700 Records of Blasting Operations**:**

Blasting records will be maintained at the mine site for at least three years and upon request, records will be available for inspection by the Division or the public. A blasting record will contain the name of Alton Coal Development LLC; location, date, and time of the blast; name, signature, and Utah certification number of the blaster conducting the blast. It will also include the identification, direction, and distance, in feet, from the nearest blast hole to the nearest dwelling, public building, school, church, community or institutional building outside the permit area, except those described in 524.690 and weather conditions, including those which may cause possible adverse blasting effects.

The blasting record will include: The type of material blasted; sketches of the blast pattern including number of holes, burden, spacing, decks, and delay pattern; diameter and depth of holes; types of explosives used; total weight of explosives detonated in an eight-millisecond period; initiation system; type and length of stemming; and mats or other protection used.

If protected structures are within 2500 ft of the blast or it is periodic monitoring as outlined in sections 524.620 through 524.690, a record of seismographic and airblast information will include: type of instrument, sensitivity, and calibration signal or

certification of annual calibration; exact location of instrument and the date, time, and distance from the blast; name of the person and firm analyzing the seismographic record; and the vibration and/or airblast level recorded; and the reasons and conditions for each unscheduled blast.

See Appendix 5-4 for example shot report.

524.800 Use of Explosives:

Alton Coal Development LLC will comply with all appropriate Utah and federal laws and regulations in the use of explosives.

525. **SUBSIDENCE CONTROL PLAN**

The proposed underground mining is first-mining only and is planned for limited extraction with no subsidence. Refer to Appendix 5-9 (Norwest Report) for geotechnical and design information. Due to the design and mining method of underground mining in this plan, no subsidence is projected and no monitoring is planned. As requested by the Division, however, the company will conduct surface observation walkovers of each of the 4 developed panel areas in this proposed plan within 60 days of completion of mining in those areas. Two additional observation walkovers will be made at approximately 1 year intervals following the initial walkover. If the observations determine that no affects or voids have developed to the surface, it will be documented and forwarded to the Division. If surface cracking, sinkholes or other surface impacts are noted during the walkovers, they will be documented, located on a surface topographic map, reported to the Division, photographed and repaired after approval by the Division. If the observation indicates no deformation is occurring, no further walkovers are proposed to be conducted on the respective panel areas.

It should be noted that, in addition to the larger pillar sizing near the portals (Appendix 5-9), the portal entries will be lined with arches and/or crossbars in areas of less than 120' of cover, per recommendations in the Norwest Report (Appendix 5-9), to further reduce the possibility of subsidence or failure in that low cover area.

Highwall mining or Auger mining, as defined in the definitions in R645-100-200 is Surface Mining, thus Underground regulations do not apply. Therefore, highwall mining in this plan have been addressed using the regulations contained in R645-302-240, Special Categories of Mining (See Chapter 9). The alternate highwall option has limited extraction with no subsidence. Refer to Appendix 5-8 (Feasibility of highwall mining the Smirl seam) for geotechnical and design information. Due to the design and mining

method of highwall mining in this plan, no subsidence is projected and no monitoring is planned. Appendix 1-2 Right of Entry, Exhibit 5 contains the New Dame Lease. In this document, under Article 7 Section 7.03, provisions have been made if there is material damage as a result of subsidence.

526. **MINE FACILITIES**:

The area of land that will have a performance bond posted in the North Private Lease is shown on Drawing 5-47. The lease boundary encompasses three Permit Areas. Due to bond requirements and the scarcity of open space with relation to the soil and spoil stockpiles in Permit Area 1, construction of facilities and development of the mining pits must follow a rigid sequence. As depicted in Appendix 8-2, the first increment of bonding in Permit Area 1 covers all of Area 1's Phase 2, Phase 3, and Facilities costs while only allowing Phase 1 (excavation) cost for Pit 1. Therefore, as shown in Drawing 5-48, the first stage of mining activity involves construction of the South Haul Road, Ponds 5 and 6, Ditches 5 through 11, and the temporary topsoil, subsoil and spoil stockpiles. To construct each of these facilities, ground cover, topsoil, and subsoil must be removed and stockpiled according to the plan and methods set out in Chapter 2 section 231 and section 523 of this chapter and also shown on Drawing 2-4. Once these facilities have been constructed, excavation of Pit 1 will commence.

526.110-115 Existing Structures.

There are no existing structures within the permit areas that will be utilized for the purposes of coal mining or reclamation.

526.116. Public Roads:

526.116.1. Operations Within 100 ft. of a Public Road

Initial mining operations at the Coal Hollow Mine will be on the western edge of the property, and will require rerouting Kane County Road #136 (K3900) so that operations do not come within 100 feet of this road. During the initial development phase (topsoil removal, diversion construction, etc.), equipment traffic may cross the county road right-of-way to access the necessary area, see Drawing 5-3. Details related to the road relocation and reestablishment can be viewed on Drawings 5-3, 5-22E, 5-22F, 5-22H and in Appendix 1-7.

In addition, the road adjacent to Lower Robinson Creek (K3993) has been claimed by Kane County as a public road. An agreement has been developed with the County to

restrict access on this road to escort by mine personnel only. Details for the reestablishment of this road following mining are provided on Drawing 5-22C.

Initial mining operations at the North Private Lease will be on the western edge of the property, and will require rerouting Kane County Road #136 (K3900) and placing the intersection with the Alton Coal Mine Road (K3100) outside of the mine boundary. Concurrent with and during construction of the bypass road, mining or reclamation operations are planned within 100 ft. of County Road 136 and mine vehicles may cross the right-of-way of Kane County Road 136 for a short period early in the operation's life. Any mine traffic crossing the county road will be required to stop and yield to any County Road 136 traffic before proceeding. Other appropriate measures, including signage and mine operating practices and training will be implemented to protect the public. Appendix 1-11 includes an easement and agreement with Kane County to construct the North Private Lease bypass road and to safely conduct mining operations adjacent to the current county road concurrent with construction activities. Details related to the road relocation and reestablishment can be viewed on Drawings 5-47, 5-48, 5-61, through 5-63 and in Appendix 1-11.

Drawing 5-48 specifically shows County Road 136 in relation to the North Private Lease Permit Area 1. While the bypass around the North Private Lease for County Road 136 is being constructed, mining operations will commence in Area 1. During this time, traffic on County Road 136 will continuously have unimpeded access and will not require escort through the mine permit area. Until the bypass road is complete, the mining area will be barricaded and fenced along County Road 136 and access will be limited to four (4) temporary gates.

526.116.2 Relocating a Public Road:

For the Coal Hollow Mine, following the initial development period, Kane County will temporarily relocate County Road #136 (K3900) to federal lands located west of the permit area which are managed by the BLM. This relocation will bypass the permit area for the duration of mining operations and is shown on Drawing 5-3. Details of agreements and appropriate approvals for this road relocation are located in Appendix 1-7. The relocated road is not within 100 ft. of mining or reclamation operations. The design and route of the relocated road has been approved by Kane County authorities and the BLM. Kane County will continue to have sole jurisdiction and will maintain it as a public road. Following completion of mining operations within the permit area, Kane County will reestablish the road to the approximate original location and will also reclaim the temporary road as required by the BLM. The existing road from the north relocation diversion point to the permit boundary will also continue to be maintained as a public road by Kane County. Once the road intersects the permit boundary, appropriate signs and barricades will be installed to protect the public. This road will be reestablished following mining as provided in the agreements in Appendix 1-7 and shown on Drawings 5-22E, 5-22F and 5-22H.

For the North Private Lease, Kane County will temporarily relocate County Road #136 (K3900) and the intersection with the Alton Coal Mine Road (K3100) to Private lands located west and south of the permit area which are leased by ACD. This relocation will bypass the permit area for the duration of mining operations and is shown on Drawing 5-47. Details of agreements and appropriate approvals for these road relocations are located in Appendix 1-11. The relocated road is within 100 ft. of mining or reclamation operations. The design and route of the relocated road has been approved by Kane County authorities and the property owner. Kane County will continue to have sole jurisdiction and will maintain it as a public road. Following completion of mining operations within the permit area, Kane County will reestablish the road to the approximate original location and will also reclaim the temporary road as required by the BLM. A fence will be installed on the mine boundary between the public road and the active mine. Appropriate signs and barricades will be installed to protect the public. This road will be reestablished following mining as provided in the agreements in Appendix 1-11 and shown on Drawings 5-61 through 5-63.

526.200 Utility Installation and Support Facilities

526.210 Existing Utilities.

There are no known oil, gas, and water wells; oil, gas, and coal-slurry pipelines, railroads; electric and telephone lines; and water and sewage lines passing over, under, or through the permit areas. Should such facilities be installed, mining and reclamation operations will be conducted in a manner that minimizes damage, destruction, or disruption of services provided by such facilities unless otherwise approved by the owner of those facilities and the Division.

526.220 Support Facilities

The primary mine support facilities will include an office, shop, wash bay, oil containment, fuel containment, coal stacking system, coal loadout system and an equipment parking area These facilities will be constructed on an isolated section of the Coal Hollow Mine permit area that is approximately 34 acres. This area is located immediately north of Lower Robinson Creek, in Township 39 South, Range 5 West, Section 19. A diversion ditch will route water from the upgradient area immediately east of the area around the facilities and into a tributary of Lower Robinson Creek as shown on Drawing 5-3. Storm water and snow melt that occurs within the facilities area will be routed to an impoundment that will contain sediment. This impoundment will have a drop-pipe spillway installed that will allow removal of any oil sheens that may result from parking lots or maintenance activities by using absorbent materials to remove the sheen. In addition to this pond, an additional small impoundment will also be located in the southwest corner of the facilities area to control drainage from the mine access road. Details for these impoundments can be viewed on Drawings 5-28 and 5-28B.

No additional support facilities are proposed for the North Private Lease permit area. Operations occurring within the North Private Lease will continue to utilize the Coal Hollow Mine support facilities as currently constituted.

The following is a detailed description of each proposed facility and a reference to where detailed drawings can be found:

- Office: The office will be located on the northwest corner of the facilities area, immediately adjacent to the facilities access road. This building will be a steel structure with concrete footers. This structure will be 150 feet long by 100 feet wide and will be two stories in height. The office will provide working space for administrative and technical personnel. Details for the office can be viewed of Drawings 5-3 and 5-6.
- Shop: The shop will be located on the northeast side of the facilities area. This building will be a steel structure with concrete floors and foundation. The structure will be approximately 200 feet long by 100 feet wide and 50 feet high. This building will be used for maintenance of equipment, parts storage, tool storage, and office space for maintenance personnel. Details for this building can be viewed on Drawings 5-3 and 5-7.
- Wash Bay: The wash bay will be located immediately east of the shop. This building will be a steel structure with a concrete foundation. The structure will be 50 feet long by 60 feet wide and 50 feet high. Included will be a closed circuit water recycle system. This system will eliminate and store water impurities and reroute water back through the wash bay for cleaning equipment. Details for this structure can be viewed on Drawings 5-3, 5-8, and 5-8A.
- Oil and Fuel Containments: The oil and fuel containments will be concrete structures appropriately sized for containing metal tanks. The oil containment will contain 55 gallon barrels and up to 2,000 gallon totes. This containment will be 80 feet long by 30 feet wide and 3 feet deep. The fuel containment will store 3 fuel tanks. Included will be a 4,000 gallon unleaded fuel tank and two 12,000 gallon diesel tanks. This structure will 50 feet long by 30 feet wide and 3 feet deep. Details for this structure can be viewed on Drawings 5-3 and 5-8.
- Coal Stacking System: The coal stacking system will be located in the central part of the facilities area. This system will include a coal hopper, coal feeder breaker, feed conveyor, crusher, and an inclined conveyor belt. Trucks will dump coal into the coal hopper which will funnel coal through the feeder breaker onto a short feed conveyor belt. This conveyor belt will transport the coal approximately 195 feet to a crusher that will size the coal appropriately for market. Once the coal is sized through the crusher it will enter an inclined stacker conveyor belt that is angled at approximately 16 degrees and is 186 feet long. This system will be a radial conveyor which will feed a coal stock pile with a live storage of approximately 50,000 tons. This system can be viewed on Drawings 5-3 through 5-5.
- Coal Loadout System: The coal loadout system will be located in the central part of the facilities area. This system will include an above ground reclaim feeder, a coal reclaim conveyor and an inclined conveyor. The reclaim feeder will be loaded by a dozer pushing the coal onto the feeder. One inclined conveyor that is approximately

290 feet in length will convey the coal from the feeder to the loadout hopper. This loadout hopper will load highway approved haul trucks that transport coal to market.

- Minor Facilities: The minor facilities will include a septic vault at the office (Drawing 5-6), a power washing and water recycle system in the Wash Bay (Drawing 5-8A), conduit with electrical lines running from generators to various facilities (Drawing 5-8B), Water System (Drawing 5-8C), an Equipment Hotstart Area (Drawing 5-3, 5-8B) and a Field Hydrant (Drawing 5-4, 5-5, 5-8B).
- Electrical System: The electrical system for the facilities at Coal Hollow will consist of two diesel fuel powered generators. One generator is a 750 KVA unit that will provide electricity to all the buildings. The other generator is a 1200 KVA unit that will be used to supply electricity to the coal conveying, sizing, stockpiling and loading system. The anticipated layout of the electrical system is shown on Drawing 5-8B.
- Dust Control Structures: A water system will be constructed to provide water for non-potable uses at the facilities and also for fugitive dust control measures. This system will consist of a water well, 6" water transport pipe, and two 16,000 gallon water tanks. These two tanks are located at the facilities area to provide a water supply to the facilities for non-potable uses (cleaning equipment, restrooms, etc…) and to load the water truck which will spray water on the active roads for dust control. The pipeline connecting the tanks to the well will be buried (3,578 ft). The tanks are portable units with its own elevated base, no base is required. These tanks supply water to the crusher through a buried pipe (869 ft.) A third tank is located east of the underground portals in Pit 10 and will supply water for dust control underground and other non-potable uses. The pipe line connecting the tank to the well will be above ground (996 ft.). This tank is also a portable unit with its own elevated base, no other base is required. It supplies water to the Underground facilities through a pipeline above ground (413 ft.). Further details related to this water system can be viewed on Drawing 5-8C. Underground water facilities will be removed and stored until the next portal pad is prepared in the bottom of Pit F-8 or as otherwise permitted
- Underground Mining Facilities: Multiple facilities are required to provide air, water, and electricity to the underground operations as well as supporting coal handling functions. Air is provided by a 6 ft 150 hp Spendrup Mine fan. The mine fan is a single unit that is mounted, but easily removed. Electricity is produced by a 2,000 kVA primary portable generator/power supply, and a secondary portable generator/power supply as needed. Water is supplied to the underground operations via the water supply system described above. Water is also supplied from the same tank and supply line to the underground mine office and the underground bath house. Wastewater from the underground mine office is piped to a buried wastewater holding tank and periodically pumped out. Greywater from the bath house is piped to a buried septic vault and drain field. No wastewater is produced at the bath house. Coal is transported by belt from the underground and transferred to the stacking conveyor at the portal of underground Entry #3. Coal is loaded and hauled from the stockpile beneath the stacking conveyor to the loadout facilities described above. The generator and stacker are mobile and considered temporary. All of these facilities are in an existing pit~~, and shown on Drawing 5-3B~~. These facilities will be removed and

stored until the next portal pad is prepared in the bottom of Pit F-8 or as otherwise permitted.

During mine development and the initial mining period, some facilities of a temporary nature such as mobile buildings and crusher/stacking conveyors may be utilized.

Support facilities to provide lighting at night will be kept to a minimum but will need to be sufficient enough to provide safe operating conditions in the dark. The following lighting equipment is anticipated to be used to provide safe working conditions:

- Two to three mobile light plants: Each light plant will have up to four 1,000 watt lights.
- Four to six exterior lights at the facilities area for lighting walkways and miscellaneous work areas: Each of these is expected to be 250 watt lights.
- Lights on mobile mining equipment, support vehicles and building lights

The support facilities will be located, maintained, and used in a manner that prevent or control erosion and siltation, water pollution, and damage to public or private property; and to the extent possible use the best technology currently available to minimize damage to fish, wildlife, and related environmental values; and minimize additional contributions of suspended solids to stream flow or runoff outside the mine permit area. Any such contributions will not be in excess of limitations of Utah or Federal law.

The facilities will be fully reclaimed at the end of mining operations with the exception of the water well. The final contour for this area can be viewed on Drawing 5-37 and an anticipated timetable is shown on Drawing 5-38.

526.300 Water Pollution Control Facilities:

Water pollution associated with mining and reclamation activities within the permit areas will be controlled by:

- Construction of berms and/or diversion ditches to control runoff from all facilities areas.
- Roads will be constructed with ditches to capture runoff
- Diversion ditches will be constructed as necessary around active mining and reclamation areas to capture runoff from those areas.
- Sedimentation impoundments will be constructed to control discharges
- In areas where impoundments or diversions are not suitable to the surrounding terrain, silt fence or other appropriate structures will be utilized to control sediment discharge from the permit area.

In order to accomplish these objectives for the Coal Hollow Mine, watershed analysis of the permit and adjacent areas has been completed and specific designs are established for each water pollution control structure. Primary control structures include five sediment

impoundments, four diversion ditches and miscellaneous berms. The locations of these structures can be viewed on Drawing 5-3. The detailed analysis for these structures and specific designs can be viewed on Drawings 5-25 through 5-34. As mining advances into the federal coal, the open pits will mine out Pond 2 and Ditch 2. These structures will not be rebuilt following backfill and reclamation. In addition, a geotechnical analysis of the impoundments to ensure stability can be viewed in Appendix 5-1. ~~The watershed and structure sizing analysis can be viewed in Appendix 5-2. An evaluation of the possible addition of underground mine water pumped to Sediment Pond 3 is included as Appendix 5-13. Additionally, any stormwater produced within Pit 10 and surrounding the underground facilities is routed to the same sump used to pump water to Pond 3. The sump, ditches, culverts and flow paths for this area are shown on Drawing 5-3B.~~

In addition to these primary structures, temporary diversions and impoundments may also be implemented, as necessary, in mining areas to further enhance pollution controls.

All these facilities will be reclaimed to approximate original contour. The reclamation sequence and final landform can be viewed on Drawings 5-37 and 5-38.

In order to accomplish these objectives for the North Private Lease, watershed analysis of the permit and adjacent areas has been completed and specific designs are established for each water pollution control structure. Primary control structures include six sediment impoundments, eighteen diversion ditches, a temporary 18” culvert directing undisturbed runoff beneath Pond T1, a temporary engineered mobile pump and pipeline system from Pond T1 to Pond 6, and miscellaneous berms. The locations of these structures can be viewed on Drawings 5-48 to 5-50, 5-65 and 5-65A. The detailed analysis for these structures and specific designs can be viewed on Drawings 5-67 through 5-73. In addition, a geotechnical analysis of the impoundments to ensure stability can be viewed in Appendix 5-11. The watershed and structure sizing analysis can be viewed in Appendices 5-12 and 5-12A. Depending on the timing of approval for Areas 2 and 3, mining in the extension of Area 1 (which contains Pits 7, 8 and 9) may be limited as shown in Drawing 5-57 by Pond T1 and the geologic contact between Tropic Shale and Quaternary Alluvium in Pits 8 and 9. Temporary Pond T1 must remain in place until Pond 7 has been constructed and no alluvium will be mined until the hydrologic analysis of Areas 2 and 3 has been performed and approved. Once these approvals are obtained, the Area 2 facilities will be constructed and Pond T1 and the other Area 1 extension temporary facilities will be removed or mined out by advancing pits.

In addition to these primary structures, temporary diversions and impoundments may also be implemented, as necessary, in mining areas to further enhance pollution controls.

All these facilities, except for the previously removed temporary structures in the extension of Area 1, will be reclaimed to approximate original contour. The reclamation sequence and final landform can be viewed on Drawings 5-74 through 5-76B.

ACD has obtained a Nationwide Permit through the US Army Corps of Engineers (SPK 2011-01248) for the crossing of Culvert C-2. ACD will send the Division a copy of the mitigation completion report for this permit along with the Division’s annual report in the year which the mitigation is completed. ACD will also notify the Division of completion

and approval by the Corp of ACD's application for an Individual Section 404 permit under the same number. This notification will include a copy of the approval letter and reference to USACOE's public archive for viewing of the permit documents.

526.400 Air Pollution Control Facilities:

Air pollution (fugitive dust) emissions from mining and reclamation operations in the permit area will be controlled by a number of means, including:

- Haul roads will be maintained and will have water or other dust suppressants applied as appropriate.
- Road surfaces will be graded to stabilize/remove dust-forming debris as required.
- Areas adjoining primary roads will be stabilized and vegetated as required.
- Mobile equipment speeds will be controlled to minimize dusting conditions.
- Cleared vegetation debris within the mine area will be disposed of by placement in pit backfills.

A water system will be constructed to provide water for non-potable uses at the facilities and also for fugitive dust control measures. This system will consist of a water well, 6" water transport pipe, and three 16,000 gallon water tanks. Two of these are placed along the coal haul road near the crushing area and will be used specifically to load the water truck which will spray water on the active roads within the permit area to control dust and provide water for dust suppression at the crushing facilities as needed. The third tank is located above the underground facilities area to provide a water supply to the facilities for non-potable uses (cleaning equipment, restrooms, etc…). Further details related to this water system can be viewed on Drawing 5-8C.

Due to the close proximity between permit areas, aside from the addition (in correlation with the Division of Air Quality) of monitoring stations, proposed activities at the North Private Lease permit area will continue to utilize the air pollution control facilities as currently constituted at the Coal Hollow Mine.

For details related to air pollution control and monitoring, refer to Chapter 4 and Appendix 4-5 and 4-6 or additionally Air Approval Order DAQE-AN140470005-15 found at http://www.deq.utah.gov/Permits/air/index.htm.

527. **TRANSPORTATION FACILITIES**

527.100 Classification of Roads

Primary roads are any road that is used to transport coal or spoil and is frequently used for access or other purposes for a period in excess of six months; or is to be retained for an approved postmining land use. The following are the roads that meet the classification of a primary road based on this standard:

Roads used to transport coal or spoil in excess of six months

There are three roads in the Coal Hollow mine that will be used to transport coal or spoil in excess of six months and are referred to as "Facilities Access Haul Road" and "Dump Access Haul Road", and the Underground Portal Access/Haul Road. The two main haul roads will be the main accesses for the pits throughout the life of the mine. Details for these roads are provided in Section 527.200 and on Drawings 5-22 and 5-23. An as-built plan & profile of the Underground Portal Access is also provided in Drawing 5-22I. In addition to these roads, the road located within the facilities area is also classified as a primary road. This road is referred to as "Facilities Roadway" and details are described in 527.200 along with Drawings 5-22A and 5-22B.

There are two roads in the North Private Lease that will be used to transport coal or spoil in excess of six months and are referred to as "Northern Haul Road" and "Southern Haul Road". Details for these roads are provided in Section 527.200 and on Drawings 5-58, 5-59 and 5-60. These roads and the North Private Lease will be accessed via an approximate 50 foot driveway from County Road 136 (K3900) as depicted on Drawings 5-47 and 5-48.

Roads retained for an approved postmining land use

Roads retained for an approved postmining land use include the following: Access to East Pugh Property (K3993), County Road 136 (K3900), Alton Coal Mine Road (K3100), Access to Water Well and Road to Swapp Ranch. Details and locations for these roads are shown on Drawings 5-61through 5-63 5-35, 5-37, 5-22A, 5-22B, 5-22C, 5-22D, 5-22E, 5-22F and 5-22H.

All other roads planned for construction within the permit area will be classified as ancillary. These will include temporary ramps, benches and equipment travel paths within the active mining area.

527.200 Description of Roads

Transportation facilities for the Coal Hollow Mine include eight primary roads, 2 stacking conveyors, a conveyor system, and miscellaneous ancillary/temporary roads. Numerous drawings detail the designs and specifications for each one of the proposed facilities. The following is a description of each facility and a reference for the associated drawings:

- Roads: Three primary mine haul roads are planned within the permit area. The first road extends from the coal unloading area to the first series of pits along the west side of the property. This road will be utilized for access to the pits (pits shown on Drawing 5-10). This road will be approximately 1,100 feet in length and will be utilized throughout mining. There will be four culverts installed along this road all sized for a 100 year, 24 hour storm event. The first culvert will be across a tributary of Lower Robinson Creek and will be a 36 inch corrugated steel pipe. The second culvert is the main crossing over Lower Robinson Creek and is a 96 inch corrugated steel pipe. Both of these culverts have been sized based on analysis of the Lower Robinson Creek watershed. This analysis can be viewed in Appendix 5-3. The third and fourth culverts are crossing over a diversion ditch that will route water mainly from disturbed areas along the south side of Lower Robinson Creek to a sediment impoundment. These culverts will be a 24 inch corrugated steel pipe.

  The second road extends from the first road and proceeds southwest to join and run along a 1,200’ section of the rebuilt County Road 136 corridor. This road is approximately 2,900 feet in total length. There are two culvert crossings along the County Road 136 portion of this road that are placed to match the original county specifications. These culverts will be 18 inch culverts sized to match the County Road 136 culverts originally in place.

  The following specifications apply to these Primary mine haul roads:
  1) Roads will be approximately 80’ in width
  2) Approximately a 2% crown
  3) Approximately one foot deep cut ditches along shoulders for controlling storm water
  4) 18” of crushed rock or gravel for road surfacing, except for the section of the Pit B-1 access extending from County Road 136 to the pit. This section of road

will utilize approximately 6” of crushed rock or gravel for road surfacing. This shallower depth of gravel will still provide the necessary benefits of dust control and sediment control for surface water runoff during a short usage life. For this section of road will be utilized for coal haulage for only around 2-3 months and the western half of it will be eventually mined out as part of the borrow area.

5) Cut and fill slopes of 1.5 h:1v
6) Minimum fill over each culvert will be 2 times diameter of culvert
7) Berms placed as necessary along fills

The underground mine portal access and haul road will also be a primary road. This road is accessed from the main haul road from the coal unloading area. The underground access road will be approximately 1,500’ in length and will be constructed to the same specifications for the haul roads above, except that the road may be narrowed to a 40 foot width. A plan & profile of the as-built configuration for the underground access road is provided in Drawing 5-22I. This drawing will be updated when the portal area is re-established in subsequent Federal Block pits.

The ancillary roads will have similar specifications except surfacing will occur only as needed and may be narrowed to a 40 foot road width. A typical cross section for the ancillary roads can be viewed on Drawing 5-24.

The location and details for Primary Mine Haul roads can be viewed on Drawings 5-3 and 5-22 and 5-23.

In addition to the three primary Mine Haul roads, the road located within the facilities area is also classified as a primary road. This road is planned to be 24 feet wide with 24 inches of compacted sub base and 8 inches of compacted 1 inch minus gravel as surfacing. This road is referred to as “Facilities Roadway” and more details are described in 527.200 along with Drawings 5-22A and 5-22B.

In addition to the primary roads that will be present during active mining, four additional roads are planned to exist postmining and are also classified as primary roads for this reason.

Roads that will remain postmining are the following:

- Road to Water Well with details shown on Drawing 5-22D
- Road to east C. Burton Pugh property (K3993) with details shown on Drawing 5-22C
- County Road 136 (K3900) with details on Drawing 5-22E, 5-22F and 5-22G. This County road will be reconstructed within the permit area by Kane County. This reconstruction will occur concurrently with the final stage of reclamation as scheduled on Drawing 5-38 and is expected to be completed by the end of Year 4.
- Road to Swapp Ranch (same specification as the Water Well Road)

The location of these roads is shown on Drawing5-37 along with the post mining topography.

The ramps, benches and equipment travel paths within the active surface mining area are temporary in nature and will be relocated frequently as mining progresses. These temporary travelways are considered part of the pit due to their short term use, and are not individually designed nor engineered. They will be built and maintained to facilitate safe and efficient mine and reclamation operations. Other temporary ancillary roads (such as the Pond 3 access road shown on Drawing 5-3) outside the mining area may be necessary from time to time to access facilities or impoundments during the life of operations. These roads will typically only comprise a single lane access approximately 14 feet wide that would see minimal use. Any surface flow on these roadways would not be highly erosive along generally gentle road gradients. Any flow on these roads will be controlled using minor berms or ditches, and in each case would be fully contained within the watershed of, and would report to the impoundments that they provide access for. These roads will not remain post-mining and also will not be individually designed nor engineered. They will be built and maintained to facilitate safe and efficient mine and reclamation operations.

- Conveyors: A conveyor system will be used to stockpile coal and to load highway approved haul trucks for transportation to market. The first conveyor is mainly a stacker system for the coal stockpile which will be located at the coal unloading area and will be approximately 451' in length. This conveyor is estimated to be a 48" solid frame system.

  The second conveyor is a coal reclaim belt that will be loaded by an above ground reclaim feeder from the coal stockpile and will convey coal to the loadout chute which will load the highway approved coal haulage trucks. This section will be approximately 290' in length. Similar to the first section, this conveyor is estimated to be a 48" solid frame system.

  An additional stacking conveyor will be installed to transfer coal from the underground conveyor system to a stockpile from which trucks will be loaded. The stacking conveyor will be a 48'wide, wheel-mounted system, approximately 250' in length.

  Drawings of these systems can be viewed on Drawings 5-3 through 5-5.

Transportation facilities for the North Private Lease will consist of two primary roads, and miscellaneous ancillary/temporary roads. Drawings detail the designs and specifications for each one of the proposed facilities. The following is a description of each facility and a reference for the associated drawings:

- Roads: A primary haul road shown in Drawings 5-47, 5-58 and 5-59 will extend from the entrance of the permit area to the center of Pit 20. This road is approximately 3,800 feet in length. This road is referred as the "Northern Haul Road". A second primary haul road shown in Drawings 5-47 and 5-60, the "Southern Haul Road"

extends from the South end of Pit 1 on the West, to the South end of the Highwall Trench on the East. This road is approximately 2,980 feet in length. A portion of this road will be constructed in designated wet meadow under Army Corps of Engineers permit NWP-14. Alton submitted pre-construction notification SPK 2011-001248 describing the disturbance and mitigation. These roads and the North Private Lease will be accessed via an approximate 50 foot driveway from County Road 136 (K3900) as depicted on Drawings 5-47 and 5-48.

- There are three culvert crossings along this road as shown in Drawing 5-58 including a substantial culvert to cross Kanab Creek. Culvert 1 (C-1) is sized at 24 inches. C-2 is sized at 36 inches to match the current culvert under County Road 136. Culvert C-3 is sized at 144 inches for maximum anticipated flows in Kanab Creek. Final design of this culvert will be in conjunction with approvals and oversight from the Army Corps of Engineers. Culvert sizing calculations can be found in Appendix 5-12.

The following specifications apply to these Primary mine haul roads:

1) Roads will be approximately 80' in width
2) Approximately a 2% crown
3) Approximately one foot deep cut ditches along shoulders for controlling storm water
4) 18" of crushed rock or gravel for road surfacing
5) Cut and fill slopes of 1.5 h:1v
6) Berms placed as necessary along fills

The ancillary roads will have similar specifications except surfacing will occur only as needed and may be narrowed to a 40 foot road width. A typical cross section for the ancillary roads can be viewed on Drawing 5-24.

The ramps, benches and equipment travel paths within the active surface mining area are temporary in nature and will be relocated frequently as mining progresses. These temporary travelways are considered part of the pit due to their short term use, and are not individually designed nor engineered. They will be built and maintained to facilitate safe and efficient mine and reclamation operations.

527.220 Alteration or Relocation of Natural Drainageways.

As currently planned, no natural drainageways will be altered or relocated due to road construction, though a temporary diversion of Lower Robinson Creek will be constructed to allow for maximum recovery of coal. This temporary diversion of Lower Robinson Creek is not being constructed to facilitate road construction. If any other alterations or relocations are necessary, appropriate measures will be taken to obtain Division approval for such alterations or relocations. All culverts placed in natural drainageways for the North Private Lease have been described in Appendix 5-12 and shown on Drawing 5-47. Reclamation of these culverts is also described in the same Appendix and shown on Drawing 5-79. ACD has obtained a Nationwide Permit through the US Army Corps of Engineers (SPK 2011-01248) for the crossing of Culvert C-2. ACD will send the Division a copy of the mitigation completion report for this permit along with the

Division's annual report in the year which the mitigation is completed. ACD will also notify the Division of completion and approval by the Corp of ACD's application for an Individual Section 404 permit under the same number. This notification will include a copy of the approval letter and reference to USACOE's public archive for viewing of the permit documents.

Mine development work will include a temporary diversion of Lower Robinson Creek away from the mining area. This diversion has been designed for a flow capacity of a 100 year, 24 hour storm event. The sides will be graded to a 3h:1v slope and rip-rap will be appropriately placed to minimize erosion of the channel beyond current channel conditions. All specifications required to meet the requirements for such a diversion have been included in this diversion design. Appendix 5-2 details the analysis/specifications for this diversion and Drawings 5-20 and 5-21 show the details of this design.

As part of the reclamation process, Lower Robinson Creek will be reconstructed to its approximate original location. The design for this reconstruction is shown on Drawings 5-20A and 5-21A. This design includes considerable improvements to the channel compared to the channel's current condition. The current condition is such that less than 25% of the channel within the disturbed area has a flood plain present and most of the slopes are near the angle of repose with fair to poor vegetative cover. The reconstructed channel includes stable slope angles that will be revegetated with a flood plain on both sides of the channel for the entire length reconstructed. Sharp corners in the original alignment have been rounded to sinuous curve shapes and rip-rap will be installed in the bottom section of the channel to minimize erosion. The flood plain will seeded and covered with erosion matting to control erosion until a natural vegetative condition can be attained.

527.230 Road Maintenance

All roads will be maintained on an as needed basis using motor graders, water trucks for dust suppression, and other equipment as necessary. Crushed stone and/or gravel will be used as a surface course for primary roads outside the active mining area, and may be used as needed for ramps and travelways within the pit. Should the roads be damaged by a catastrophic event, such as an earthquake or a flood, repairs will be made as soon as possible after the damage has occurred or the road will be closed and reclaimed.

527.250. Geotechnical Analysis

No alternative specifications or steep cut slopes associated with roads are anticipated outside the active mine area. A report of appropriate geotechnical analysis will be provided should such alternative specifications or steep cut slopes where approval of the Division is required, become necessary.

528. **HANDLING AND DISPOSAL OF COAL, OVERBURDEN, EXCESS SPOIL, AND COAL MINE WASTE:**

528.100. Coal removal, handling, storage, cleaning, and transportation areas and structures;

Coal handling activities are confined to the active pit and underground portal areas, and the coal sizing/loading areas located north of Pit 10 at the Coal Hollow Mine. For the North Private Lease, coal handling activities will be isolated to the active mining pit backfill and excavation crest. Temporary stockpiling of coal will only occur within the active pit backfill and excavation crest. Coal will then be transported in over-the-road trucks from the North Private Lease active pit to the loadout at Coal Hollow Mine for sizing and final loading. All areas and facilities will be designed and constructed, utilized and maintained in conformance with industry standards and all applicable regulations. At the conclusion of mining, the facilities will be removed as part of final mine reclamation activities. Material from coal stockpile areas, and other areas of potential coal accumulation will be excavated and the excavated material placed in the final mined out pit.

528.200. Overburden;

Overburden will be excavated after the removal of topsoil and subsoil as defined in Chapter 2. The overburden excavation will be accomplished by utilizing hydraulic excavators with end dump haul trucks and dozers. This process will include excavating this material in a stairstep fashion that will include benches approximately every 40 feet in depth. These benches are planned to be approximately 40 feet in width and will create an overall 2h:1v slope for the highwalls to create a stable and safe working area. This is a conservative approach for initial mining and once mining begins, ongoing geotechnical studies and monitoring will be used to further define the proper slope angle to ensure slope stability while maximizing resource recovery.

For the Coal Hollow Mine, based on the overburden isopach map (Drawing 5-15), the overburden removal has been separated into three major stages. The first stage of

overburden removal is the initial mining area, Pits 1-9. These pits have a relatively low strip ratio, approximately 4.3:1 (refer to Drawing 5-13). In order to efficiently remove overburden for this phase, spoil from the first three pits will be placed in an excess spoil area. This excess spoil structure will hold approximately 2.7 million loose cubic yards (LCY) of material. Once the excess spoil pile is filled, overburden from the next 5 pits can then be used as pit backfill as the mining progresses through Pit 9.

As is depicted, each Pit/Highwall Trench consists of Panels, each panel consisting of 10 holes. The spacing between the holes and the spacing between the panels are dictated by the amount of overburden over the panels. Highwall mining (See Chapter 9 which addresses R645-302 regulations) is designed such that subsidence does not occur to the surface with nonyieldable webs and barriers. Specific information concerning these design are found in Appendix 5-8. Highwall mining will have only the disturbance associated with the pit/trench for placement of the highwall miner and will have no impact on the surface above the highwall panels.

During the course of mining, some additional excavated overburden may be placed temporarily on mined over and backfilled areas due to operational considerations. This material will be re-excavated and moved to a final placement location as operations allow.

Following the completion of surface mining in the highwall trench, backfill operations from the long-term excess spoil structure to the open pit has been ongoing to bring both the spoil structure and highwall trench areas to AOC. It is anticipated that backfill of the highwall trench will be completed by the 9th of June, 2016.

Pit B-1 at the Coal Hollow Mine will be encountered incident to reclamation and borrow activities where it would not have been practical to mine otherwise. This resource is estimated at 118,000 tons and has been fully mined and immediately backfilled (to the intermediate landform shown in Drawings 5-35 and 5-36) in 2016. The coal will be surface mined utilizing the same equipment and methods as the previous pits and will be extracted to an extent that protects eventual regrading and reclamation efforts in the Borrow Area from potential oxidation, heating, or spontaneous combustion. Mining of Pit B-1 will begin by dozing a thin layer (apx. 5 ft) of overburden covering the eastern extent of Pit B-1 from east to west in a strip 50 to 100 ft wide to create a temporary overburden berm. The coal underneath this first strip will then be extracted leaving a void into which the berm and subsequent strip overburden can be placed. The coal strips will progress from east to west, with dozing and potentially truck haulage replacing the stripped overburden into the coal voids from west to east. Mining slopes will be maintained at a 1:1 face angle for mining benches under 50 ft. Above 50 ft., a 40 ft. catch bench will be installed between 40 ft. 1:1 benches. Additional fill material will be sourced from the adjacent pit slopes as necessary to establish the final 3:1 slope on the South pit wall and to meet the intermediate design surface depicted in Drawings 5-35 and 5-36. This backfill will then remain in place until closure of the Underground Mine and finally rehandled as backfill to ~~Pit 10~~the open pit containing the underground portals.

Following approval of the Federal LBA and acquisition of necessary leases, mining will continue into pits 10-B and Pits F-1 to F-8 as shown on Drawings 5-10 and 5-16. These pits will be mined with the same methods described above and will progress from South to North while directly backfilling to the South. At no point during the development and extraction of Pits 10-B to F-8 will overburden removal extend beyond the Tropic Shale ridge located directly to the east of these pits. Coal extraction via underground mining or highwall mining may extend under and beyond this ridge, but overburden removal would result in potential impacts to the groundwater aquifer and would first require an update to the PHC document included as an appendix to Chapter 7 of this MRP. Mining and concurrent backfill of Pits 10-B to F-8 will result in the backfill of the current underground portal area, so that as mining finishes in Pit F-8 the pit will be left open in anticipation of development of another portal with the borrow area serving to provide eventual backfill. As permitting of the larger LBA continues, subsequent amendments will address the final location of the portal pad and further plans for underground mining as well as any potential changes to backfill sourcing.

The underground mining will be accessed through portals in an existing pit. There will be no additional overburden removal associated with the underground mining~~; however, cross sections of the portal area are shown on Drawing 5-3B~~. Cover or overburden depths for the underground mining are described in Section 627. Following the completion of underground mining, backfill of the remaining open pit will be completed utilizing borrow from the areas delineated in Drawings 5-19 and 5-37. Final backfill will require approximately 1.5 Million C.Y. of borrow material, but will still achieve AOC.

All maps related to the overburden removal process can be viewed on Drawings 5-15 through 5-17.
The following table summarizes overburden movement for the Coal Hollow Mine.

Coal Hollow Mine Overburden Summary	
2011	2,065,000 CY
2012	3,582,000 CY
2013	3,090,500 CY
2014	3,423,600 CY
2015	1,613,000 CY
2016	277,000 CY
2017	0
2018	0
2019	5,196,600 CY
2020	5,032,300 CY
Borrow	1, 516,200 CY
Total	25,796,200 CY

Based on the overburden isopach map (Drawing 5-56), the overburden removal has been separated into three major stages. The initial area of overburden removal is the mining area, Pits 1-10. These pits have a relatively low strip ratio, approximately 4.6:1 (refer to Drawing 5-52). In order to efficiently remove overburden for this phase, spoil from pit 1 and pit 2 will be placed in a temporary excess spoil area on the area of pits 5 and 6. This excess spoil structure will hold approximately 505,866 loose cubic yards (LCY) of material. Once the excess spoil pile is filled, overburden from the remaining pits can then be used as pit backfill as the mining progresses through Pit 10, also as pit 4 is completed, material from the temporary spoils pile can be placed in pit backfill.

In the North Private Lease permit area, coal will be loaded directly into over-the-road trucks at the pit floor. To the extent it is needed, a coal surge pile will be located on the pit floor or within the active pit backfill and excavation crest. Coal waste from cleaning the exposed seam will be retained in the pit. For the initial cut, coal waste will be temporarily pushed into a pile on top of unmined coal until enough coal has been removed to place the coal waste on the floor of the pit.

From the initial mining area, operations will proceed North from pit 11to Pit 21. These pits have a strip ratio increasing from 4.7:1 to 9.6:1. All spoils are placed in the preceding void or the NW temporary spoil stockpile. Once coal is removed from Pit 21, overburden above the final landform depicted on Drawing 5-74 from the adjacent backfilled pits and the NW temporary spoil stockpile will be used to backfill the remaining Pit 21.

The final mining area will be developed on the East side of Kanab Creek. Overburden removal from Highwall Trench 1 will proceed north in the trench with overburden being placed directly as backfill in the same highwall trench, progressing from South to North.

The following table summarizes overburden movement for the North Private Lease.

North Private Lease Overburden Summary	
Year 1	2,013,603 CY
Year 2	2,414,827 CY
Year 3	3,429,000 CY
Year 4	3,429,000 CY
Year 5	3,456,000 CY
Year 6	3,456,000 CY
Year 7	1,254,600 CY
Total	19,453,030 CY

528.300. Spoil, coal processing waste, mine development waste, and noncoal waste removal, handling, storage, transportation, and disposal areas and structures;

528.310. Excess Spoil. Excess spoil will be placed in designated disposal areas within the permit areas, in a controllable manner to ensure mass stability and prevent mass movement during and after construction. Excess spoil will meet the design criteria of R645-301-535. For the purposes of SURFACE COAL MINING AND RECLAMATION ACTIVITIES, the permit application must include a description of the proposed disposal site and the design of the spoil disposal structures according to R645-301-211, R645-301-212, R645-301-412.300, R645-301-512.210, R645-528.310, R645-301-535.100 through R645-301-535.130, R645-301-535.300 through R645-301-535.500, R645-536.300, R645-301-542.720, R645-301-553.240, R645-301-745.100, R645-301-745.100, R645-301-745.300, and R645-301-745.400.

Excess spoil will be placed in the areas designated on Drawing 5-3 for the Coal Hollow Mine and on 5-47, 5-51A and 5-51C for the North Private Lease. This fill will be placed in lifts not to exceed 4 feet in thickness. The material will be transported from the overburden removal area to the fill by end dump haul trucks and a dozer(s) will spread the spoil to this lift thickness. The fill will meet at minimum 85% compaction as related to the standard Procter. Final slopes at the coal hollow mine will be regraded to a maximum slope of 3h:1v. The top of the fill will be sloped to approximately 2% to prevent pooling of water and to reestablish drainage similar to original flow patterns. The excess spoil placed on the non-mined areas at the Coal Hollow Mine is approximately 32 acres and varies in height from 35 to 120 feet. The excess spoil pile will be completely rehandled as pit backfill prior to final reclamation. Following the completion of surface mining in the highwall trench, backfill operations from the long-term excess spoil structure to the open pit has been ongoing to bring both the spoil structure and highwall trench areas to AOC. It is anticipated that backfill of the highwall trench will be completed by the 9th of June, 2016. Design and the geotechnical study of this long-term fill can be viewed in Appendix 5-1.

The temporary excess spoil placed above pits 4, 5 and 6 of the North Private Lease is approximately 9 acres and varies in height from 23 to 59 feet. Design of this temporary fill can be viewed in Drawing 5-51A and the geotechnical study can be viewed in Appendix 5-11.

The Northwest (NW) temporary excess spoil placed adjacent to pits 18 to 21 of the North Private Lease is approximately 6 acres and varies in height from 27 to 41 feet. Design of this temporary fill can be viewed in Drawing 5-51C and the geotechnical study can be viewed in Appendix 5-11

The report provided in Appendix 5-11 lists the spoil geotechnical characteristics for the North Private Lease.

- *R645-301-211: The applicant will present a description of the premining soil resources as specified under R645-301-221. Topsoil and subsoil to be saved under R645-301-232 will be separately removed and segregated from other material.*

  The soil resources for the proposed long-term excess spoil disposal area in the Coal Hollow Mine are described in Appendix 2-1. The soil resources for the North Private Lease temporary spoil disposal area are described in Volume 11. A plan has been developed for removal of topsoil and suitable subsoil based on the soil descriptions in these appendices. The handling plan can be viewed on Drawings 2-2 and 2-4. Topsoil and acceptable subsoil will be separately removed and segregated from other material prior to placement of any spoil.

- *R645-301-212: After removal, topsoil will be immediately redistributed in accordance with R645-301-242, stockpiled pending redistribution under R645-301-234, or if demonstrated that an alternative procedure will provide equal or more protection for the topsoil, the Division may, on a case-by case basis, approve an alternative;*

  Excess spoil will have topsoil and subsoil redistributed in an approximately uniform, stable thickness with the approved post mining land use, contours and surface water drainage systems. Material handling practices will prevent excess compaction of these materials. Handling practices will also protect the materials from wind and water erosion before and after seeding and planting. These practices include seeding and grading stockpiles that will exist for more than year to stabilize the soil.

- *R645-301-412.300: Criteria for Alternative Postmining Land Uses.*

  The MRP does not contemplate Alternative Postmining Land Uses.

- *R645-301-512.210: Excess Spoil. The professional engineer experienced in the design of earth and rock fills will certify the design according to R645-301-535.100.*

  A professional engineer experienced in the design of earth and rock fills with assistance from a geotechnical expert has certified the design according to R645-301-535.100. These certifications can be viewed on Drawings 5-37, 5-37A and 5-17 for the Coal Hollow Mine and on Drawing 5-47, 5-51A and 5-51C for the North Private Lease.

- *R645-301-512.220: Durable Rock Fills*

  No durable rock fills are planned.

- *R645-301-514.100: Excess Spoil. The professional engineer or specialist will be experienced in the construction of earth and rock fills and will periodically inspect the fill during construction. Regular inspections will also be conducted during placement and compaction of fill materials.*

  A professional engineer or specialist that is experienced in the construction of earth and rock fills will inspect the fill during construction and regular inspections will also be conducted during placement and compaction of fill materials.

- *R645-301-535.100 through R645-301-130: Disposal of Excess Spoil*

  A geotechnical analysis of the excess spoil structure designs has been completed by an expert in this field. The long term static safety factor for these structure designs are estimated at 1.6 to 1.7. Lifts will be placed in thicknesses not to exceed 4 feet. The lifts will meet 85% compaction by the standard Procter. The fill will be graded to allow for drainage similar to original patterns and to prevent excessive infiltration of water. For the Coal Hollow Mine, fill will be covered with subsoil and topsoil as specified in Chapter 2 to provide conditions suitable for revegetation of the area. The excess spoil pile will be completely rehandled as pit backfill prior to final reclamation. Following the completion of surface mining in the highwall trench, backfill operations from the long-term excess spoil structure to the open pit has been ongoing to bring both the spoil structure and highwall trench areas to AOC. It is anticipated that backfill of the highwall trench will be completed by the 9th of June, 2016. Design and the geotechnical study of this long-term fill can be viewed in Appendix 5-1. The geotechnical studies for both permit areas can be viewed in Appendix 5-1for the Coal Hollow Mine and 5-11 for the North Private Lease.

- *R645-301-535.300 through R645-301-535.500: Disposal of Excess - Spoil Durable Rock Fills.*

  No durable rock fills are planned.

- *R645-301-536.300: Disposal of Coal Mine Waste in Excess Spoil*

  No coal mine waste is planned in the excess spoil area.

- *R645-301-542.720: Excess spoil will be placed in designated disposal areas within the permit area, in a controlled manner to ensure that the final fill is suitable for reclamation and revegetation compatible with the natural surroundings and the approved postmining land use. Excess spoil that is combustible will be adequately covered with noncombustible material to prevent sustained combustion. The reclamation of excess spoil will comply with the design criteria under R645-301-553.240.*

The landform underneath the Coal Hollow Mine long-term excess spoil as shown in Drawing 5-37 and 5-37A will be suitable to the surrounding area and for the postmining land use of primarily grazing. No combustible excess spoil will be placed in the proposed structure. The final reclamation of the spoil does not include any terraces and the slopes will not exceed 3h:1v.

The North Private Lease temporary spoil piles will be in place for less than 6 months before being rehandled as pit backfill. Therefore, no postmining land use has been considered.

- *R645-301-553.240: The final fill configuration of the fill (excess spoil) will be suitable for the approved postmining land use. Terraces may be constructed on the outslope of the fill if required for stability, control of erosion, to conserve soil moisture, or to facilitate the approved postmining land use. The grade of the outslope between terrace benches will not be steeper than 2h:1v (50 percent).*

  The landform underneath the Coal Hollow long-term excess spoil as shown in Drawings 5-37 and 5-37A will be suitable to the surrounding area and for the postmining land use of primarily grazing. The reclamation of the spoil does not include any terraces and the slopes will not exceed 3h:1v. The long term static safety factor for these slopes is estimated to be 1.6 to 1.7.

- *R645-301-745.100: General Requirements.*

  745.110: Excess Spoil will be placed in designated disposal areas within the permit area, in a controlled manner to:

  745.111: Minimize the adverse effects of leaching and surface water runoff from the fill on surface and underground water;

  Reclamation of the landform underneath the Coal Hollow long-term excess spoil will include a topsoil cover and subsoil layer. Infiltration through the reclamation is expected to be minimal based on the high clay content of these soils. The North Private Lease temporary excess spoils will be in use for such a short period of time and will be comprised mostly of high-clay tropic shale such that infiltration is also expected to be negligible. In addition, laboratory data found at Appendix 7-16, page 20, for the overburden shows that there is minimal potential for leaching of pollutants should infiltration rates become higher than expected.

  The foundations of these excess spoil areas also has high clay content with minimal potential for infiltration. This will provide an additional, natural barrier to protect ground water present beneath the proposed structure.

  745.112: Ensure permanent impoundments are not located on the completed fill. Small depressions may be allowed by the Division if they are needed to retain

moisture or minimize erosion, create and enhance wildlife habitat or assist revegetation, and if they are not incompatible with the stability of the fill; and

Permanent impoundments are not planned on the excess spoil areas. Small depressions may be constructed as allowed by the Division to retain moisture, minimize erosion, create and enhance wildlife habitat or assist revegetation.

745.113: Adequately cover or treat the excess spoil that is acid- and toxic forming with nonacid nontoxic material to control the impact on the surface and ground water in accordance with R645-301-731.300 and to minimize adverse effects on plant growth and approved postmining land use.

Laboratory data discussed at Appendix 7-16, pages 26-27, and representative of the overburden planned for disposal in the excess spoil areas does not show acid- and toxic forming characteristics.

745.120: Drainage Control. If the disposal area contains springs, natural or manmade water courses, or wet weather seeps, the fill design will include diversions and underdrains as necessary to control erosion, prevent water infiltration into the fill and ensure stability.

A spring and seep survey available in Chapter 7 has identified no springs or wet weather seeps in the proposed excess spoil areas. The final surfaces will be regraded to a contour that will route water from snowmelt and rainfall around the excess spoil as shown on the final contours Drawing 5-37 and 5-74. There are no manmade water courses present in the excess spoil area. No underdrains are planned for the excess spoil structure.

745.121: Diversions will comply with the requirements of R645-301-742.300

No diversions are planned in the excess spoil area.

745.122 : Underdrains

No underdrains are planned in the excess spoil area.

745.300: Durable Rock Fills

No durable rock fills are planned.

745.400: Preexisting Benches

The MRP does not contemplate disposal of excess spoil on preexisting benches.

528.320. <u>Coal Mine Waste.</u>

The MRP does not contemplate processing coal that would produce coal mine waste.

528.321 Coal Processing Waste

The MRP does not contemplate processing coal that would produce coal processing waste that would be returned to the Underground workings.

528.322. Refuse Piles.

The MRP does not contemplate the construction of any refuse piles,

528.323. Burning and Burned Waste Utilization.

The MRP does not contemplate processing coal that would produce coal mine waste, eliminating the any potential for coal mine waste fires.

528.330. Noncoal Mine Waste.

Noncoal mine wastes including, but not limited to, grease, lubricants, paints, flammable liquids, garbage, abandoned mining machinery, lumber and other combustible materials generated during mining activities will be temporarily stored in appropriate containers and removed from the permit area and will be properly disposed of according to applicable State and Federal regulations.

528.332.

Final disposal of noncoal mine wastes will be in a State-approved solid waste disposal site not located within the permit area. Exceptions to the removal of all noncoal mine waste from the permit area is concrete pads for the generator and fan utilized in the underground operation will remain and will be covered with approximately 120' of overburden. Another exception is the decommissioned water line that was used to pump mine water from Pit 10 to Pond 3 which will remain in place following reclamation. This line is comprised of two INERT 4" black polyethylene flexible pipes that are buried at an average depth of six feet underground, and always below the subsoil horizon. All above-ground portions of the line have been recovered and recycled or stored for reuse. A portion of the line may be encountered during excavation of the borrow area for backfill of the pit containing the underground portals and will be recovered for reuse or disposed of at that time.

528.333.

At no time will any noncoal mine waste be deposited in a refuse pile or impounding structure, nor will any excavation for a noncoal mine waste disposal site be located within eight feet of any coal outcrop or coal storage area.

528.334.

Notwithstanding any other provision to the R645 Rules, any noncoal mine waste defined as "hazardous" under 3001 of the Resource Conservation and Recovery Act (RCRA) (Pub. L. 94-580, as amended) and 40 CFR Part 261 will be handled in accordance with the requirements of Subtitle C of RCRA and any implementing regulations.

528.340

As development of the Underground workings originates in the existing Surface mining Pit, development wastes have been stored in the excess spoils pile. Once all mining is complete spoils will be returned to the mined out Pit following the surface mining regulations.

528.350. Acid-Forming and Toxic Materials

If coal, having qualities that make it unmarketable, are to be left in the pit backfill in quantities greater than 5,000 tons: a minimum of 1 composite sample per 5,000 Tons of coal will be analyzed for the parameters list in Table 3 and 7 of the “Soil and Overburden Guidelines”. A record of the volume of coal remaining and laboratory analytical results will be kept onsite. Debris, acid-forming, toxic-forming materials and materials constituting a fire hazard will be identified and disposed of in accordance with R645-301-528.330, R645-301-537.200, R645-301-542.740, R645-301-553.100 through R645-301-553.600, R645-301-553.900, and R645-301-747. Appropriate measures will be implemented to preclude sustained combustion of such materials; and

528.400. Dams, embankments and other impoundments.

Plans do not include using dams, embankments or other impoundments for disposal of coal, overburden, excess spoil or coal mine waste

529. **MANAGEMENT OF MINE OPENINGS**.

When no longer required, underground mine openings will be closed in accordance with R645-301-513, R645-301-529, R645-301-551 and MSHA approved requirements and backfilled. Each entry to the Underground mine if temporarily inactive, but having further projected useful service will be secured by barricades or other covering devices and posted with signs, to prevent access into the entry and identify the hazardous nature of the openings.

Highwall mining (See Chapter 9 which addresses R645-302 regulations) will produce openings (holes) in the coal at the bottom of trenches specifically constructed for highwall mining. Trench depth to the holes range from 60 feet to 200 feet. After highwall mining is completed in a given trench, that trench will be completely backfilled, burying any openings made by highwall mining.

All wells will be managed to comply with R645-301-748 and R645-301-765. Water monitoring wells will be managed on a temporary basis according to R645-301-738.

Wells constructed for monitoring groundwater conditions in the proposed Coal Hollow Mine permit and adjacent area, including exploration holes and boreholes used for water wells or monitoring wells, will be designed to prevent contamination of groundwater and surface-water resources and to protect the hydrologic balance. A diagram depicting typical monitoring well construction methods is shown in Drawing 7-11. Monitoring wells will include a protective hydraulic seal immediately above the screened interval, an annular seal plugging the borehole above the hydraulic seal to near the ground surface, and a concrete surface seal extending from the top of the hydraulic seal to the ground surface which is sloped away from the well casing to prevent the entrance of surface flows into the borehole area. Well casings will protrude above the ground surface a sufficient height so as to minimize the potential for the entrance of surface water or other material into the well. A steel surface protector with a locking cover will be installed at monitoring wells to prevent access by unauthorized personnel. Where there is potential for damage to monitoring wells, the wells will be protected through the use of barricades, fences, or other protective devices. These protective devices will be periodically inspected and maintained in good operating conditions. Monitoring wells will be locked in a closed position between uses.

When no longer needed for monitoring or other use approved by the Division upon a finding of no adverse environmental or health and safety effects, or unless approved for transfer as a water well under R645-301-731.100 through R645-301-731.522 and R645-301-731.800, each well will be capped, sealed, backfilled, or otherwise properly managed, as required by the Division in accordance with R645-301-529.400, R645-301-631.100, and R645-301-748. Permanent closure measures will be designed to prevent access to the mine workings by people, livestock, fish and wildlife, machinery and to keep acid or other toxic drainage from entering ground or surface waters.

If a water well is exposed by coal mining and reclamation operations, it will be permanently closed unless otherwise managed in a manner approved by the Division.

Permanent closure and abandonment of water wells greater than 30 feet in depth will be in accordance with the requirements of “Administrative Rules for Water Well Drillers”, State of Utah, Division of Water Rights or other applicable state regulations. Abandonment of wells will be performed by a licensed water well driller. The wells to be abandoned will be completely filled using neat cement grout, sand cement grout, unhydrated bentonite, or bentonite grout, or other materials approved by the Utah State Engineer’s office. Alternatively, the well may be abandoned using a different procedure upon approval from the Utah State Engineer’s office.

Abandonment materials will be introduced at the bottom of the well or required sealing interval and placed progressively upward to the top of the well. The casing will be severed a minimum of 2 feet below the ground surface. A minimum of 2 feet of compacted native material will be placed above the abandoned well upon completion.

Within 30 days of the completion of well abandonment procedures, a report will be submitted to the State Engineer by the responsible licensed driller giving data related to the abandonment of the well. This shall include the name of the licensed driller or other person(s) performing abandonment procedures, name of well owner at the time of abandonment, the address or location of the well by section, township, and range, abandonment materials and equipment used, water right or file number covering the well, the final disposition of the well, and the date of completion.

Exploration holes and boreholes will be backfilled, plugged, cased, capped, sealed, or otherwise managed to prevent acid or toxic contamination of water resources and to minimize disturbance to the prevailing hydrologic balance. Exploration holes and boreholes will be managed to ensure the safety of people, livestock, fish and wildlife, and machinery.

If a water well is exposed by coal mining and reclamation operations, it will be permanently closed unless otherwise managed in a manner approved by the Division.

If any exploration boreholes are to be used as monitoring wells or water wells, these will meet the provisions of R645-301-731

Boreholes will be backfilled to within 1 foot of the land surface with concrete or other materials approved by the Division as necessary to prevent contamination of groundwater or surface-water resources or to protect the prevailing hydrologic balance. The upper approximately 1 foot will be backfilled with native materials to facilitate reclamation (see Drawing 6-11). Exploration holes and boreholes that may be uncovered during mining and reclamation activities will be permanently closed unless approved for water monitoring or otherwise managed in a manner approved by the Division.

530 **OPERATIONAL DESIGN CRITERIA AND PLANS:**

531 GENERAL:

There are five sediment impoundments for the Coal Hollow Mine permit area and six sediment impoundments for the North Private Lease. These structures will be constructed using a combination of dozers and backhoes. The structures have been designed to contain the required storm events as specified in Appendix 5-2 for the Coal Hollow Mine and Appendices 5-12 and 5-12A for the North Private Lease. The structures will have sediment removed as necessary to ensure the required capacities. Details for these structures can be viewed on Drawings 5-25, 5-26 and 5-28 through 5-32 with calculations and supporting text in Appendix 5-2 for the Coal Hollow Mine. ~~An evaluation of the possible addition of underground mine water pumped to Sediment Pond~~

~~3 is included as Appendix 5-13.~~ Details for the North Private Lease sediment impoundments are on drawings 5-67 through 5-71A with calculations and supporting text in Appendices 5-12 and 5-12A.

There are no other coal processing waste banks, dams or embankments proposed within the permit areas.

Underground mining has begun within the Coal Hollow Mine permit area, but none of the planned underground workings are closer than 900 ft. from the nearest sediment impoundment as shown by comparing Drawing 5-3 to Drawing 5-10. Also, all underground mining has been planned as "first mining" only, which means that underground workings are not expected to cause any surface subsidence.

532 SEDIMENT CONTROL:

Six diversion ditches along with five sediment impoundments are proposed for the Coal Hollow Mine. In addition, miscellaneous controls such as silt fence and berms are also proposed for specific areas. The proposed locations for these structures are shown on Drawing 5-3. Details associated with these structures can be viewed on Drawings 5-25 through 5-34 and Appendix 5-2. ~~An evaluation of the possible addition of the underground mine water pumped to Sediment Pond 3 is included as Appendix 5-13.~~ These structures have also been analyzed in relation to the requirement for borrow at the end of underground operations to backfill ~~Pit 10~~the open pit containing the underground portals. As mining advances into the federal coal, the open pits will mine out Pond 2 and Ditch 2. These structures will not be rebuilt following backfill and reclamation. The Drawings and Appendices listed above note this analysis. Eighteen diversion ditches, a temporary 18" culvert directing undisturbed runoff beneath Pond T1, a temporary engineered mobile pump and pipeline system from Pond T1 to Pond 6, along with six sediment impoundments are proposed for the North Private Lease. In addition, miscellaneous controls such as silt fence and berms are also proposed for specific areas. The proposed locations for these structures are shown on Drawing 5-65. Details associated with these structures can be viewed on Drawings 5-67 through 5-71A and Appendices 5-12 and 5-12A.

Mulch will be placed on the seedbed surface once soil amendments have been incorporated and seeding has been accomplished in areas that will be reclaimed to native plant communities. The mulch should control erosion by wind and water, decrease evaporation and seed predation, and increase survivability of the seeded species. Like the seeding methods, mulch will be applied with a variety of techniques and materials depending on the reclaimed area.

532.100 Disturbed Area:

The smallest practicable area, consistent with reasonable and safe mine operational practices will be disturbed at any one time during the mining operation and reclamation phases. This will be accomplished through progressive backfilling, grading, and prompt revegetation of disturbed areas. An estimated reclamation schedule is shown on Drawing 5-38 for the Coal Hollow Mine and on 5-76A and 5-76B for the North Private Lease.

532.200 Backfill Stabilization:

The backfilled material will be stabilized by grading to promote a reduction of the rate and volume of runoff in accordance with the applicable requirements. The excess spoil and fill above approximate original contour at the Coal Hollow Mine will be graded to a maximum angle 3h:1v slope and revegetated to minimize erosion. This area is designed with concave slopes and slope irregularities that will also assist in minimizing erosion. A geotechnical analysis of this configuration has been completed and the factor of safety is estimated at 1.6 to 1.7. This analysis can be viewed in Appendix 5-1. The remaining backfill will be placed in the mined out pit, and thus confined on all sides. Any backfill placed along pit boundaries or on top of operational highwalls to blend with original topography will be contoured at a final slope angle not to exceed 3h:1v (18.4°). Appendix 5-5 provides an analysis of reclaimed slopes which shows that a minimum safety factor of these slopes reclaimed with a planned maximum slope angle of 3h:1v (18.4°) will be 1.7 which exceeds the requirement of 1.3. Appendix 5-5 also states that this planned reclaim slope angle is much less than the general area angle of repose. In fact it is at least 14° less. Therefore, postmining slopes reclaimed at the planned angle of 3h:1v (18.4°) are inherently stable. Any backfill material that must be stockpiled for longer than six months will be stabilized using tackifier or another surface stabilization method. Additionally, in areas upgradient of completed or near completed reclamation, temporary berms will be utilized to ensure a reduction of rate and volume of runoff into and through working areas. Also, all pits will be bermed to minimize runoff into and through working areas.

Mulch will be placed on the seedbed surface once soil amendments have been incorporated and seeding has been accomplished in areas that will be reclaimed to native plant communities. The mulch should control erosion by wind and water, decrease evaporation and seed predation, and increase survivability of the seeded species. Like the seeding methods, mulch will be applied with a variety of techniques and materials depending on the reclaimed area.

533. IMPOUNDMENTS.

533.100.

No impoundments meeting the NRCS Class B or C criteria for dams in TR-60, or the size or other criteria of 30 CFR Sec. 77.216(a) are planned for the Coal Hollow Mine.

533.110

Impoundments not included in 533.100, will be designed and constructed with a minimum static safety factor of 1.3 for a normal pool with steady state seepage saturation conditions or meet the requirements of R645-301-733.210.

The proposed sediment impoundments are expected to impound seasonal water and storms. A geotechnical analysis of these designs has been performed and can be reviewed in Appendix 5-1 for the Coal Hollow Mine and Appendix 5-11 for the North Private Lease. Static safety factors for the proposed designs range from 2.2 to 5.3.

533.200. Foundations.

Foundations for temporary and permanent impoundments will be designed so that

- *Foundations and abutments for the impounding structure are stable during all phases of construction and operation. Such foundations for temporary and permanent impoundments will be designed based on adequate and accurate information on the foundation conditions*

  Refer to Appendices 5-1 and 5-11 for information related to foundations of the proposed impounding structures. No permanent impoundments are proposed.

- *All vegetative and organic materials will be removed and foundations excavated and prepared to resist failure. Cutoff trenches will be installed if necessary to ensure stability.*

  All vegetation, topsoil and subsoil as identified in Chapter 2 will be removed from the impoundment areas prior to construction. Cutoff trenches will not be necessary for stability.

- *Slope protection will be provided to protect against surface erosion at the site and protect against sudden drawdown.*

  Slopes of impoundments will be seeded and sloped to protect against erosion at the site. The high clay content and compaction characteristics of the material present at the impoundments will also assist with minimizing erosion of the slopes.

- *Faces of embankments and surrounding areas will be vegetated except that faces where water is impounded may be riprapped or otherwise stabilized in accordance with accepted design practices.*

  Faces of embankments will be vegetated to minimize erosion. Standing water in the ponds is expected to be minimal and therefore these faces will also be seeded for erosion control.

- *The vertical portion of any remaining highwall will be located far enough below the low- water line along the full extent of highwall to provide adequate safety and access for the proposed water users.*

  All highwalls will be fully covered following active use and backfilling of pits.

533.300

A rapid drawdown analysis was completed assuming the spillways are plugged, the basin fills to top of the embankments and then the water is released or pumped down to the base of basins. The soil strengths utilized were based on total stress conditions as determined from the triaxial shear tests completed for this project. It should be noted that rapid drawdown is highly unlikely since spillway and outlet piping will be no more than 4-feet below the top of embankments. The resulting safety factors under these conditions range from 1.2 to 1.9. Based on this analysis, no additional protection measures are needed for the impoundments in relation to rapid drawdown. Details for this analysis on Coal Hollow impoundments are provided in Appendix 5-1, pages 6 through 7 in the main section of the report. Details for this analysis on the North Private Lease also refer to Appendix 5-1, pages 6 and 7, as the geotechnical report provided in Appendix 5-11 lists the soil characteristics present in the North Private Lease to be identical to those in the Coal Hollow Mine.

533.600.

The MRP does not contemplate construction of impoundments that meet the criteria of MSHA, 30 CFR 77.216(a).

533.700 - 714. <u>Plans.</u>

Each detailed design plan for structures not included in 533.610 shall:

- *Be prepared by, or under the direction of, and certified by a qualified, registered, professional engineer, except that all coal processing waste dams and embankments covered by R645-301-536 and R645-301- 746.200 shall be certified by a qualified, registered, professional engineer;*

  Designs for the proposed impoundments have been prepared by a qualified, registered, professional engineer, with assistance from a geotechnical expert. These certifications can be viewed on Drawings 5-28 through 5-31 for the Coal Hollow Mine and on Drawings 5-67 through 5-71A for the North Private Lease.

- *Include any design and construction requirements for the structure, including any required geotechnical information;*

  A geotechnical analysis of the impoundments has been prepared by an expert in this field. This analysis can be viewed in Appendix 5-1 for the Coal Hollow Mine and Appendix 5-11 for The North Private Lease. Embankments will be constructed in 2 foot lifts as recommended by the analysis.

- *Describe the operation and maintenance requirements for each structure; and*

  The proposed impoundments are designed to temporarily store water from storm events and snow melt. Long term standing water in the impoundments is anticipated to be seasonal and sediment will be removed as necessary to provide the required storage capacities. Emergency spillways have been included in the designs to provide a non-destructive discharge route should the capacities ever be exceeded, except in the case of Pond T1 which will utilize an engineered pump and pipeline to discharge excess water to Pond 6 Surveys of these impoundments

will be regularly conducted to ensure that design capacities are available. ~~An evaluation of the possible addition of underground mine water pumped to Sediment Pond 3 is included as Appendix 5-13.~~

- *Describe the timetable and plans to remove each structure, if appropriate.*

  All impoundments will be reclaimed at the end of operations except Pond T1, which will be mined through directly following construction of Pond 7 in Area 2 and will not be rebuilt following backfill and reclamation. Pond T1 will remain in place until approval of Areas 2 and 3 for mining. The estimated timeline for removal of these structures are shown on Drawing 5-38 for the Coal Hollow Mine and Drawing 5-76B for the North Private Lease. Expected removal is year seven of the mining and reclamation process for the Coal Hollow Mine and year five - seven for the North Private Lease. In areas where soils are not stabilized following the removal of these sediment impoundments, silt fence will be appropriately installed and maintained to provide sediment control until stable conditions are met.

Detailed designs of impoundments can be viewed on Drawings 5-28 through 5-31 for the Coal Hollow Mine and Drawings 5-67 through 5-71A for the North Private Lease. Locations can be viewed on Drawing 5-3 and 5-25 for the Coal Hollow Mine and Drawings 5-47, 5-65 and 5-65A for the North Private Lease.

534. **ROADS**

534.100-200 <u>Roads will be located, designed, constructed, reconstructed, used, maintained, and reclaimed so as to:</u>

- *Prevent or control damage to public or private property;*

  All roads will be reclaimed to approximate original contour as shown on Drawings 5-37, 5-37A and 5-38 for the Coal Hollow Mine and Drawings 5-74 through 5-76B for the North Private Lease. These roads are designed to control damage to public and private property.

- *Use nonacid - or nontoxic-forming substances in road surfacing; and*

  There will be no acid or toxic forming substances used in road surfacing.

- *Have, at a minimum, a static safety factor of 1.3 for all embankments.*

  All embankments are designed with static safety factors that exceed 1.3.

- *Have a schedule and plan to remove and reclaim each road that would not be retained under an approved postmining land use.*

  All roads not planned to remain postmining will be removed and reclaimed according to Drawings 5-37 and 5-37A for the Coal Hollow Mine and Drawings 5-74, and 5-75 for the North Private Lease. The estimated timetable for removing these roads is shown on Drawing 5-38 and 5-76B respectively.

- *Control or prevent erosion, siltation and the air pollution attendant to erosion by vegetating or otherwise stabilizing all exposed surfaces in accordance with current, prudent engineering practices.*

  Cut ditches will be established on the shoulders of all primary roads to control drainage and erosion. Cut and fill slopes along the primary roads will be minimal and are not expected to cause significant erosion. In locations where there are culvert crossings (i.e. Lower Robinson Creek), the fills slopes will be stabilized by utilizing standard methods such as grass matting or straw wattles~~. Also, the upper slope of pit 10 is cut into alluvium at 4:1, this slope will be stabilized by planting with the interim seed mix found in Chapter 2 page 2-25~~.

- *To ensure environmental protection and safety appropriate for their planned duration and use, including consideration of the type and size of equipment used, the design and reconstruction of roads will incorporate appropriate limits for grade, width, surface materials, and any necessary design criteria established by the Division.*

The following specifications apply to the Primary Mine Haul roads:

1) Roads will be approximately 80' in width
2) Approximately a 2% crown
3) Approximately one foot deep cut ditches along shoulders for controlling storm water
4) 18" of crushed rock or gravel for road surfacing, except for the section of the Pit B-1 access extending from County Road 136 to the pit. This section of road will utilize approximately 6" of crushed rock or gravel for road surfacing. This shallower depth of gravel will still provide the necessary benefits of dust control and sediment control for surface water runoff during a short usage life. For this section of road will be utilized for coal haulage for only around 2-3 months and the western half of it will be eventually mined out as part of the borrow area.
5) Cut and fill slopes of 1.5 h:1v
6) Minimum fill over each culvert will be 2 times diameter of culvert
7) Berms placed as necessary along fills

The underground mine portal access and haul road (shown in Drawing 5-22I) will also be a primary road. This road is accessed from the main haul road from the coal unloading area. The underground access road will be approximately 1500' in length and will be constructed to the same specifications for the haul roads above, except that the road may be narrowed to a 40 foot width.

The ancillary roads will have similar specifications except surfacing will occur only as needed and may be narrowed to a 40 foot road width. A typical cross section for the ancillary roads can be viewed on Drawing 5-24.

The location and details for Primary Mine Haul roads can be viewed on Drawings 5-3, 5-22, 5-23, 5-47, and 5-58 through 5-60.

For the Coal Hollow Mine, in addition to the two primary Mine Haul roads, the road located within the facilities area is also classified as a primary road. This road is planned to be 24 feet wide with 24 inches of compacted sub base and 8 inches of compacted 1 inch minus gravel as surfacing. This road is referred to as "Facilities Roadway" and more details are described in 527.200 along with Drawings 5-22A and 5-22B.

In addition to the primary roads that will be present during active mining, four additional roads are planned to exist postmining and are also classified as primary roads for this reason.

Roads that will remain postmining are the following:

- Road to Water Well with details shown on Drawing 5-22D
- Road to east C. Burton Pugh property (K3993) with details shown on Drawing 5-22C
- County Road 136 (K3900) with details on Drawings 5-22E, 5-22F and 5-22G for the Coal Hollow Mine, and Drawings 5-61 and 5-63 for the North Private Lease. This County road will be reconstructed within the permit area by Kane County. This reconstruction will occur concurrently with the final stage of reclamation as scheduled on Drawings 5-38 and 5-76B and is expected to be completed by the end of Year 5 for the Coal Hollow Mine and Year 7 for the North Private Lease.
- Alton Coal Mine Road (K3100) in the North Private Lease with details on Drawings 5-62 and 5-63. This short section of County Road will also be reconstructed within the permit area by Kane County. The reconstruction will occur concurrently with the final stage of reclamation as scheduled on Drawing 5-76B and will be completed in Year 7.
- Road to Swapp Ranch (same specification as the Water Well Road)

The location of these roads is shown on Drawings 5-37 along with the post mining topography.

The ramps, benches and equipment travel paths within the active surface mining area are temporary in nature and will be relocated frequently as mining progresses. These temporary travelways are considered part of the pit due to their short term use, and are not individually designed nor engineered. They will be built and maintained to facilitate safe and efficient mine and reclamation operations.

Other temporary ancillary roads (such as the Pond 3 access road shown on Drawing 5-3) outside the mining area may be necessary from time to time to access facilities or impoundments during the life of operations. These roads will not remain post-mining and also will not be individually designed nor engineered. They will be built and maintained to facilitate safe and efficient mine and reclamation operations.

534.300-340. Primary Roads.

Primary roads will:

- *Be located, insofar as practical, on the most stable available surfaces;*

  These roads are designed on the most practicable, stable surfaces.

- *Be surfaced with rock, crushed gravel, asphalt, or other material approved by the Division as being sufficiently durable for the anticipated volume of traffic and the weight and speed of vehicles using the road;*

  Primary haul roads will be surfaced with approximately 18" of crushed rock or gravel to provide a durable surface for the anticipated volume of traffic and equipment, except for the section of the Pit B-1 access extending from County Road 136 to the pit. This section of road will utilize approximately 6" of crushed rock or gravel for road surfacing. This shallower depth of gravel will still provide the necessary benefits of dust control and sediment control for surface water runoff during a short usage life. For this section of road will be utilized for coal haulage for only around 2-3 months and the western half of it will be eventually mined out as part of the borrow area.

- *Be routinely maintained to include repairs to the road surface, blading, filling potholes and adding replacement gravel or asphalt. It will also include revegetation, brush removal, and minor reconstruction of road segments as necessary; and*

  All roads will be maintained on an as needed basis using motor graders, water trucks for dust suppression, and other equipment as necessary. Crushed stone and/or gravel will be used as a surface course for primary roads outside the active mining area, and may be used as needed for ramps and travelways within the pit. Should the roads be damaged by a catastrophic event, such as an earthquake or a flood, repairs will be made as soon as possible after the damage has occurred or the road will be closed and reclaimed. Roads will be reclaimed once they are no longer needed for their intended use.

- *Have culverts that are designed, installed, and maintained to sustain the vertical soil pressure, the passive resistance of the foundation, and the weight of vehicles using the road.*

  Road fill over culverts will be at minimum two times the diameter of the culvert. This is a conservative standard that has been effectively utilized at mining operations with similar equipment and mining practices.

535. **SPOIL**

535.100 -150 Disposal of Excess Spoil.

Excess spoil will be placed in designated disposal areas within the permit area in a controlled manner. The fill and appurtenant structures will be designed using current, prudent engineering practices and will meet any design criteria established by the Division.

- *The fill will be designed to attain a minimum long-term static safety factor of 1.5. The foundation and abutments of the fill must be stable under all conditions of construction.*

  A geotechnical analysis has been completed for both the long term excess spoil structure located at the Coal Hollow Mine and the temporary excess spoil structures located at the North Private Lease. These analyses estimate the long-term safety factor to be 1.6 to 1.7 based on the proposed designs. Following proper construction practices of building the structures in maximum four foot lifts and meeting 85% compaction based on the standard Procter will ensure that the structures will be stable under all conditions of construction. The following earthwork specifications will be followed:

  1) Areas to receive fill will be stripped of all vegetation, organic material, and debris. Any existing undocumented or non-structural fill/backfill materials and other unsuitable materials will be excavated in their entirety. All areas that are to receive fill will be observed by a professional engineer experienced in the design of earth and rock fills prior to placement of fill.

  2) Fill will be compacted to 85% of the maximum density as compared to ASTM D 698 (standard proctor) for the spoil.

  3) Individual lift thickness will not exceed 4 feet, unless approved by both the Division and the professional engineer based on compaction test results during field verification.

  4) Saturated soils will be placed in an area that will have minimal effect on the performance of slopes.

  5) A qualified professional engineer with experience in the design of earth and rock fills will periodically observe the placement of fill and conduct in-place field density tests on the fill to check for adequate moisture and relative compaction. The compaction tests will be conducted as part of the periodic inspections required in R645-301-514.100, 514.311, and R645-301-514.120. These compaction tests will be conducted using nuclear density (ASTM D2292-9) or equivalent method. If less than the specified relative compaction is obtained, additional compactive effort will be applied and the fill moisture-conditioned as necessary until the specified relative compaction is attained.

  6) Wherever, in the opinion of the ACD's representatives, an unstable condition is being created, the work will not proceed in that area until an evaluation has been made and the grading operations revised, if necessary.

7) During unfavorable weather conditions, construction of the fill will not proceed without confirmation from the professional engineer experienced in the design of earth and rock fills.

This construction will occur only in the designated excess spoil areas as shown on Drawings 5-3, 5-37, for the Coal Hollow Mine and Drawing 5-47 for the North Private Lease. The fill will be placed with end dump haul trucks and lifts will be constructed using dozers. High precision GPS systems will be regularly utilized to check grades and appropriate lift thickness. Following the completion of surface mining in the highwall trench, backfill operations from the long-term excess spoil structure to the open pit have been ongoing to bring both the spoil structure and highwall trench areas to AOC. It is anticipated that backfill of the highwall trench will be completed by the 9th of June, 2016. In preparation for final borrow, Pit B-1 (as shown on Drawing 5-10) will be excavated and simultaneously backfilled to remove all coal from the borrow volume to reach the intermediate landform depicted in Drawings 5-35 and 5-36. The spoil and coal will be surface mined utilizing the same equipment and methods as the previous pits and will be extracted to an extent that protects eventual regrading and reclamation efforts in the Borrow Area from potential oxidation, heating, or spontaneous combustion. Mining of Pit B-1 will begin by dozing a thin layer (apx. 5 ft) of overburden covering the eastern extent of Pit B-1 from east to west in a strip 50 to 100 ft wide to create a temporary overburden berm. The coal underneath this first strip will then be extracted leaving a void into which the berm and subsequent strip overburden can be placed. The coal strips will progress from east to west, with dozing and potentially truck haulage replacing the stripped overburden into the coal voids from west to east. Mining slopes will be maintained at a 1:1 face angle for mining benches under 50 ft. Above 50 ft., a 40 ft. catch bench will be installed between 40 ft. 1:1 benches. Additional fill material will be sourced from the adjacent pit slopes as necessary to establish the final 3:1 slope on the South pit wall and to meet the intermediate design surface depicted in Drawings 5-35 and 5-36. Then, upon completion of underground mining, Pit ~~10~~ F-8 or the appropriate federal pit within the LBA containing the underground portals will be backfilled and all ground will be returned to the final landform shown in Drawings 5-37 and 5-37A. The geotechnical analysis for this structure can be viewed in Appendix 5-1 for the Coal Hollow Mine and in Appendix 5-11 for the North Private Lease.

- *Be located on the most moderately sloping and naturally stable areas available, as approved by the Division, and placed, where possible, upon or above a natural terrace, bench or berm, if such placement provides additional stability and prevents mass movement;*

  The excess spoil is planned to be placed in areas where natural grades range from 0 to 5%. These are some of the most moderately sloping locations in the Permit Area. Stability of these structures is estimated to be 1.6 to 1.7 based on the Appendix 5-1.

- *Be subject of sufficient foundation investigations. Any necessary laboratory testing of foundation material, will be performed in order to determine the design requirements for foundation stability. The analyses of foundation conditions will take into consideration the effect of underground mine workings, if any, upon the stability of the fill and appurtent structures; and*

  Geotechnical borings and trench samples were completed in the foundations of the proposed disposal areas. Laboratory analysis of these borings and trench samples have also been completed. Details of this analysis can be viewed in Appendix 5-1 and Appendix 5-11.

- *Incorporate keyway cuts (excavations to bedrock) or rock buttresses to ensure stability where the slope in the disposal area is in excess of 2.8h:1v (36 percent), or such lesser slope as may be designated by the Division based on local conditions. Where the toe of the spoil rests on a downslope, stability analyses will be performed in accordance with R645-301-535.150 to determine the size of rock toe buttresses and keyway cuts*

  Slopes for the proposed long-term excess spoil will not exceed 3h:1v (33 percent), therefore no keyway cuts have been proposed in the design. Appendix 5-1 and Appendix 5-11 detail the stability analyses for the proposed structures.

- *Excess spoil may be disposed of in underground mine workings,..*

  Excess spoil will not be disposed of in underground mine workings.

- *Placement of Excess Spoil. Excess spoil will be transported and placed in a controlled manner in horizontal lifts not exceeding four feet in thickness; concurrently compacted as necessary to ensure mass stability and to prevent mass movement during and after construction; graded so that surface and subsurface drainage is compatible with the natural surroundings: and covered with topsoil or substitute material in accordance with R645-301-232.100 through R645-301-232.600, R645-301-234, R645-301-242, and R645-301-243. The Division may approve a design which incorporates placement of excess spoil in horizontal lifts other than four feet in thickness when it is demonstrated by the operator and certified by a professional engineer that the design will ensure the stability of the fill and will meet all other applicable requirements.*

  Horizontal lifts will not exceed four feet in thickness unless otherwise approved by the Division. The lifts will be concurrently compacted to meet 85% of the standard Procter. The geotechnical analysis (Appendix 5-1 and Appendix 5-11), provides information showing that these construction standards will provide mass stability and will prevent mass movement during and after construction. The excess spoil will be graded to provide drainage similar to original flow patterns. Topsoil and subsoil as designated in Chapter 2 will be removed and separated from other materials prior to placement of spoil.

- *For the purposes of SURFACE COAL MINING AND RECLMATION ACTIVITIES the design of the spoil disposal structures will include the results of geotechnical investigations as follows:*

  1) *The Character of the bedrock and any adverse geologic conditions in the disposal area;*

     Refer to Appendix 5-1 and Appendix 5-11.

  2) *A survey identifying all springs, seepage, and ground water flow observed or anticipated during wet periods in the area of the disposal site;*

     Spring and seep survey information is provided on Drawing 7-1. There are no springs or seeps identified in the excess spoil area.

  3) *A survey of the potential effects of subsidence of the subsurface strata due to past and future mining operations;*

     There no historical underground mining operations in the proposed excess spoil area. There are also no future underground operations proposed.

  4) *A technical description of the rock material to be utilized in the construction of those disposal structures containing rock chimney cores or underlain by a rock drainage blanket; and*

     There are no rock chimneys or drainage blankets proposed.

  5) *A stability analysis including, but not limited to, strength parameters, pore pressures and long-term seepage conditions. These data will be accompanied by a description of all engineering design assumptions and calculations and the alternative considered in selecting the specific design specifications and methods.*

     The stability analysis and all supporting data are available in Appendix 5-1for Coal Hollow and Appendix 5-11 for the North Private Lease.

- *If for the purposes of SURFACE COAL MINING AND RECLAMATION ACTIVITIES, under R645-301-535.112 and R645-301-535.113, rock-toe buttresses or key-way cuts are required, the will include the following:*

  Neither rock-toe buttresses nor key-way cuts are required under R645-301-535.112 or R645-301-535.113.

535.200. <u>Disposal of Excess Spoil: Valley Fills/Head-of-Hollow Fills</u>.

The MRP does not contemplate disposal of excess spoil as valley fill or head-of-hollow fills.

535.300. Disposal of Excess Spoil: Durable Rock Fills.

The MRP does not contemplate disposal of excess spoil as durable rock fill.

535.400. Disposal of Excess Spoil: Preexisting Benches.

The MRP does not contemplate disposal of excess spoil on preexisting benches.

535.500 Disposal of Excess Spoil: At Drift Entries.

The MRP does not contemplate disposal of spoils resulting from face-up operations at the drift entries. Drift entries will originate from the existing Pit, excess spoil for which are stored in the pit backfill or in the approved Excess Spoils Pile.

536 COAL MINE WASTE:

The MRP does not contemplate processing of coal that would produce coal mine waste.

537 REGRADED SLOPES:

537.100 Geotechnical Analysis:

The long-term excess spoil structure and fill above approximate original contour at the Coal Hollow Mine are the only alternative specifications proposed. Although the structure will be rehandled as pit backfill prior to final reclamation to achieve AOC, a geotechnical analysis has been completed for this proposal and can be viewed in Appendix 5-1. All other mined areas within the Coal Hollow Mine and North Private Lease, for surface or underground will be restored to approximate original contour.

537.200 Regrading of Underground Fills/Spoil:

Any spoils produced by underground operations at the Coal Hollow Mine will be placed in the first instance in unused crosscuts or underground voids. If necessary, underground spoils may also be placed in the ~~Pit 10~~ open pit void, not to exceed approximate original contour. ~~As a last resort, underground spoils may also be placed in the long-term excess spoil structure under the design criteria detailed in Appendix 5-1.~~ No underground spoils are expected from the North Private Lease permit area.

540 **RECLAMATION PLAN**:

541.100 - 400 General

Concurrent with mining operations and when coal mining is complete, all pits within each permit area will be backfilled and reclaimed in accordance with the R645 rules and this permit. All equipment, structures, and other facilities, unless approved by the Division as suitable for the postmining land use or environmental monitoring, will be removed and the affected land reclaimed. Following the completion of surface mining in the highwall trench, backfill operations from the long-term excess spoil structure to the open pit has been ongoing to bring both the spoil structure and highwall trench areas to AOC. It is anticipated that backfill of the highwall trench will be completed by the 9th of June, 2016. In preparation for final borrow, Pit B-1 (as shown on Drawing 5-10) has been excavated and simultaneously backfilled to remove all coal from the borrow volume to reach the intermediate landform depicted in Drawings 5-35 and 5-36. The spoil and coal will be surface mined utilizing the same equipment and methods as the previous pits and will be extracted to an extent that protects eventual regrading and reclamation efforts in the Borrow Area from potential oxidation, heating, or spontaneous combustion. Mining of Pit B-1 will begin by dozing a thin layer (apx. 5 ft) of overburden covering the eastern extent of Pit B-1 from east to west in a strip 50 to 100 ft wide to create a temporary overburden berm. The coal underneath this first strip will then be extracted leaving a void into which the berm and subsequent strip overburden can be placed. The coal strips will progress from east to west, with dozing and potentially truck haulage replacing the stripped overburden into the coal voids from west to east. Mining slopes will be maintained at a 1:1 face angle for mining benches under 50 ft. Above 50 ft., a 40 ft. catch bench will be installed between 40 ft. 1:1 benches. Additional fill material will be sourced from the adjacent pit slopes as necessary to establish the final 3:1 slope on the South pit wall and to meet the intermediate design surface depicted in Drawings 5-35 and 5-36. Then, upon completion of underground mining, the underground portal pit will be backfilled and all ground will be returned to the final landform shown in Drawings 5-37 and 5-37A.

Underground mine portals will be closed in accordance with R645-301-513, R645-301-529, R645-301-551 and approved MSHA plans and backfilled.

Since the underground mine portals are located in the bottom of an open pit at the Coal Hollow Mine, they will be reclaimed and permanently closed by the backfilling of the pit to a depth of greater than 100’ when no longer required. Following the completion of underground mining, backfill of the open pit will be completed utilizing borrow from the areas delineated in Drawings 5-19 and 5-37. Final backfill will require approximately 1.5 Million C.Y. of borrow material, but will still achieve AOC.

When no longer needed for monitoring or other use approved by the Division upon a finding of no adverse environmental or health and safety effects, or unless approved for transfer as a water well under R645-301-731.100 through R645-301-731.522 and R645-301-731.800,

each well will be capped, sealed, backfilled, or otherwise properly managed, as required by the Division in accordance with R645-301-529.400, R645-301-631.100, and R645-301-748. Permanent closure measures will be designed to prevent access to the mine workings by people, livestock, fish and wildlife, machinery and to keep acid or other toxic drainage from entering ground or surface waters.

If a water well is exposed by coal mining and reclamation operations, it will be permanently closed unless otherwise managed in a manner approved by the Division.

Permanent closure and abandonment of water wells greater than 30 feet in depth will be in accordance with the requirements of "Administrative Rules for Water Well Drillers", State of Utah, Division of Water Rights or other applicable state regulations. Abandonment of wells will be performed by a licensed water well driller. The wells to be abandoned will be completely filled using neat cement grout, sand cement grout, unhydrated bentonite, or bentonite grout, or other materials approved by the Utah State Engineer's office. Alternatively, the well may be abandoned using a different procedure upon approval from the Utah State Engineer's office.

Abandonment materials will be introduced at the bottom of the well or required sealing interval and placed progressively upward to the top of the well. The casing will be severed a minimum of 2 feet below the ground surface. A minimum of 2 feet of compacted native material will be placed above the abandoned well upon completion.

Within 30 days of the completion of well abandonment procedures, a report will be submitted to the State Engineer by the responsible licensed driller giving data related to the abandonment of the well. This shall include the name of the licensed driller or other person(s) performing abandonment procedures, name of well owner at the time of abandonment, the address or location of the well by section, township, and range, abandonment materials and equipment used, water right or file number covering the well, the final disposition of the well, and the date of completion.

Exploration holes and boreholes will be backfilled, plugged, cased, capped, sealed, or otherwise managed to prevent acid or toxic contamination of water resources and to minimize disturbance to the prevailing hydrologic balance. Exploration holes and boreholes will be managed to ensure the safety of people, livestock, fish and wildlife, and machinery.

If an exploration borehole is exposed by coal mining and reclamation operations, it will be permanently closed unless otherwise managed in a manner approved by the Division.

If any exploration boreholes are to be used as monitoring wells or water wells, these will meet the provisions of R645-301-731

Boreholes will be backfilled to within 1 foot of the land surface with concrete or other materials approved by the Division as necessary to prevent contamination of groundwater or surface-water resources or to protect the prevailing hydrologic balance. The upper approximately 1 foot will be backfilled with native materials to facilitate reclamation (see

Drawing 6-11). Exploration holes and boreholes that may be uncovered during mining and reclamation activities will be permanently closed unless approved for water monitoring or otherwise managed in a manner approved by the Division.

542 **NARRATIVE, DRAWINGS AND PLANS**:

542-100 through 600 Plan and Timetable.

Reclamation at the Coal Hollow Mine and North Private Lease includes both ongoing reclamation and final reclamation activities. Ongoing reclamation will follow mining operations as closely as practicable during the mine production phase. Major steps in the ongoing reclamation process are:

- Backfilling and Grading. The planned backfilling and grading operations are described more fully under section 553 below.
- Topsoil and Subsoil Replacement. Following grading, suitable topsoil and subsoil will be replaced on the regraded area. Topsoil may be direct placed from areas ahead of the mine, or may be taken from available stockpiled material. The planned topsoil operation will have topsoil ahead of the operation dozed into windrows, and loaded into trucks by a front end loader. The trucks will haul the topsoil to the regraded area, or to a temporary topsoil stockpile. Subsoil will be handled similar to topsoil. Once dumped on the regraded area, topsoil and subsoil layers will be dozed to a consistent thickness. Approximately 8 inches of topsoil is expected to be removed ahead of mining and replaced over the regraded area. Subsoil removed and replaced will average 40 inches thick and will be placed between the topsoil layer and run of mine spoil. The total profile thickness of topsoil and subsoil in mined areas will average 48 inches. Once in place, the area will be fine graded to remove small erosion features and depressions. It is important to note that bonding calculations have accounted for double handling of the topsoil and subsoil quantities for the borrow area at the Coal Hollow Mine.
- Revegetation. Following replacement of topsoil the area will be revegetated by seeding. Mulch will be placed on the seedbed surface once soil amendments have been incorporated and seeding has been accomplished in areas that will be reclaimed to native plant communities. The mulch should control erosion by wind and water, decrease evaporation and seed predation, and increase survivability of the seeded species. Like the seeding methods, mulch will be applied with a variety of techniques and materials depending on the reclaimed area.

Generally, mined areas will be backfilled and graded within approximately 60 days following coal removal, or 1,500 feet of the active coal removal face. One exception to this standard is that a portion of the open pit will be left open for access to the underground portals until completion of underground mining. Following the completion

of underground mining, backfill of the open pit will be completed utilizing borrow from the areas delineated in Drawings 5-19 and 5-37. Final backfill will require approximately 1.5 Million C.Y. of borrow material, but will still achieve AOC. Areas needed for in-pit roads, ramps, drainage controls or areas which must be left open temporarily for operational reasons will be backfilled and graded when they are no longer needed. The rate of backfilling will depend on the availability of mined out pit areas for backfilling, and the rate of production at the mine. Based on anticipated production rates, Drawing 5-38 for the Coal Hollow Mine and Drawing 5-76A and 5-76B for the North Private Lease provide an estimated sequence and timing for reclamation.

Topsoil will be replaced on the graded areas as soon as operationally practicable. This work will depend on weather and soil conditions in the removal and replacement areas, but is generally anticipated to occur within 90 days of completion of regrading.

Revegetation activities will be seasonal in nature. As currently planned, initial seeding will occur at the first planting opportunity following replacement of topsoil. Supplemental seeding may be done subsequently as needed.

At the Coal Hollow Mine, all material mined goes directly to a backfill or reclaim capacity and is covered by subsoil and topsoil then prepared for mulching and seeding as soon as possible. During this stage of mining, material from the Highwall Trench is directly backfilled into the remnants of Pits 9, 10 (a portion), 20, 21 and the northern extent of the trench itself. While a majority of ~~Pit 10~~Pit F-8 or the open pit containing the underground portals will remain open until completion of underground mining, all other pits will be backfilled and reclaimed to approximate original contour. Any shortage of material for final backfill of the Highwall Trench will be made up by rehandle of spoil from the long term excess spoil pile. Following the completion of surface mining in the highwall trench, backfill operations from the long-term excess spoil structure to the open pit have been ongoing to bring both the spoil structure and highwall trench areas to AOC. It is anticipated that backfill of the highwall trench will be completed by the 9th of June, 2016. Pit B-1 at the Coal Hollow Mine will be encountered incident to reclamation and borrow activities where it would not have been practical to mine otherwise. Mining of Pit B-1 will begin by dozing a thin layer (apx. 5 ft) of overburden covering the eastern extent of Pit B-1 from east to west in a strip 50 to 100 ft wide to create a temporary overburden berm. The coal underneath this first strip will then be extracted leaving a void into which the berm and subsequent strip overburden can be placed. The coal strips will progress from east to west, with dozing and potentially truck haulage replacing the stripped overburden into the coal voids from west to east. Mining slopes will be maintained at a 1:1 face angle for mining benches under 50 ft. Above 50 ft., a 40 ft. catch bench will be installed between 40 ft. 1:1 benches. Additional fill material will be sourced from the adjacent pit slopes as necessary to establish the final 3:1 slope on the South pit wall and to meet the intermediate design surface depicted in Drawings 5-35 and 5-36. As shown on in these drawings, this pit is nearly fully contained within the greater Borrow Area but will require approximately 91,000 CY of backfill material to establish the final 3:1 slope on top of the 1:1 operational slope and bench on the South pit wall. This 91,000 CY will remain in place in the final slope and will not be recovered in the final borrow. The

remaining backfill will then remain in place until closure of the Underground Mine and finally rehandled as backfill to Pits 9-C and 10. Upon completion of underground mining, Pits 9-C and 10 will be backfilled and all ground will be returned to the final landform shown in Drawings 5-37 and 5-37A. For the disturbed area that falls within the 62.0 acres required for eventual borrow and backfill of the final open pit, the ground surface will be smooth graded subsoiled and treated for topsoil cultivation (according to described plans in Chapter 2) following completion of backfill of Pit B-1. The ground will remain in this cultivated state, but will not be released, until borrow and backfill following completion of the underground mine.

Following approval of the Federal LBA and acquisition of necessary leases, mining and reclamation will continue into pits 10-B and Pits F-1 to F-8 as shown on Drawings 5-10 and 5-16. These pits will be mined and backfilled with the same methods described above and will progress from South to North while directly backfilling to the South. At no point during the development and extraction of Pits 10-B to F-8 will overburden removal extend beyond the Tropic Shale ridge located directly to the east of these pits. Coal extraction via underground mining or highwall mining may extend under and beyond this ridge, but overburden removal would result in potential impacts to the groundwater aquifer and would first require an update to the PHC document included as an appendix to Chapter 7 of this MRP. Mining and concurrent backfill of Pits 10-B to F-8 will result in the backfill of the current underground portal area, so that as mining finishes in Pit F-8 the pit will be left open in anticipation of development of another portal with the borrow area serving to provide eventual backfill. As permitting of the larger LBA continues, subsequent amendments will address the final location of the portal pad and further plans for underground mining as well as any potential changes to backfill sourcing. The reclamation sequence for the Coal Hollow Mine is shown in Drawing 5-38.

For start-up of the North Private Lease, some delay is unavoidable in reclamation of the initial mining areas due to the time required to establish the initial working pit and backfill area, and to achieve a steady state excavation/backfill operation. As currently planned, Pits 1 and 2 will be backfilled to the planned post mining contour, graded, and the subsoil and topsoil replaced concurrently with mining of Pits 3, 4, and 5 midway through the first year of mining. Depending on the timing of approval for Areas 2 and 3, mining in the extension of Area 1 (which contains Pits 7, 8 and 9) may be limited as shown in Drawing 5-57 by Pond T1 and the geologic contact between Tropic Shale and Quaternary Alluvium in Pits 8 and 9. Temporary Pond T1 must remain in place until Pond 7 has been constructed and no alluvium will be mined until the hydrologic analysis of Areas 2 and 3 has been performed and approved. Once these approvals are obtained, the Area 2 facilities will be constructed and Pond T1 and the other Area 1 extension temporary facilities will be removed or mined out by advancing pits. Reclamation activities will proceed at the regular planned rate thereafter. As mining progresses through Pit 21 the semi-final pit void will require approximately 1,600,000 cubic yards to be rehandled from the backfill or the NW temporary spoil stockpile located above the final landform depicted in Drawing 5-74 previously placed in the adjacent pits. No other borrow or rehandle will be necessary from the highwall trench area, but the final landform depicts the previously approved borrow configuration of the topographic ridge

should the operational need for material arise. Either configuration of this ridge will provide that natural landform, post-mining land use, and drainage will be maintained or improved. In the case where borrow from the area east of Kanab Creek is not necessary, the material void will not occur and post-mining topography will achieve AOC while closely mirroring original topography as shown on Drawing 5-45. As borrow from this area East of Kanab Creek is unlikely, bond coverage for disturbance and mining of this area has been sterilized. Any planned disturbance in this area would require recalculation of the bond and an amendment to the MRP. Proposed final reclamation contours and cross sections can be viewed on Drawings 5-37 and 5-37A for the Coal Hollow Mine and on Drawings 5-74 and 5-75 for the North Private Lease.

The sequence and timing of reclamation activities is dependent on the coal production rate. Should that rate differ significantly from the current plan, the reclamation schedule will also vary.

Final reclamation includes the following:

- Backfilling and Grading. Backfilling of all final pits will commence at the conclusion of coal production. All highwalls, spoil piles, and depressions will be removed, except that small depressions may be constructed if they are needed to retain moisture, minimize erosion, create and enhance wildlife habitat, or assist revegetation. No permanent final pit impoundments are currently planned. Following the completion of surface mining in the highwall trench, backfill operations from the long-term excess spoil structure to the open pit has been ongoing to bring both the spoil structure and highwall trench areas to AOC. It is anticipated that backfill of the highwall trench will be completed by the 9th of June, 2016. Therefore, a small portion (apx. 250k C.Y.) of the long-term excess spoil structure may remain at the Coal Hollow Mine until final backfill of the final open pit. In preparation for final borrow, Pit B-1 (as shown on Drawing 5-10) has been excavated and simultaneously backfilled to remove all coal from the borrow volume to reach the intermediate landform depicted in Drawings 5-35 and 5-36. Then, following the completion of underground mining, backfill of ~~Pit 10~~the open pit containing the underground portals will be completed utilizing borrow from the areas delineated in Drawings 5-19 and 5-37. Final backfill will require approximately 1.5 Million C.Y. of borrow material, but will still achieve AOC. All exposed coal seams, and acidic or toxic-forming strata will be covered with at least five feet of noncombustible material.
- Topsoil and Subsoil Replacement. 8 inches of topsoil underlain by 40 inches of subsoil will be placed on the backfilled pits and excess spoil. Other disturbed areas will have topsoil replaced (including facilities sites, roads etc.).
- Removal of Structures. Before abandoning the permit area or seeking bond release, all structures not needed for the approved post mining land use will be removed and reclaimed. The Lower Robinson Creek diversion is proposed to be temporary. Material from the coal stockpile base area and other areas where coal spillage may accumulate will be excavated and placed in a controlled manner in

the final pit and covered with noncombustible material to prevent sustained combustion. The only structure for both permit areas planned to exist postmining is the water well in the Coal Hollow Mine permit area with details shown in Drawing 5-8C and location shown on 5-3, 5-35 and 5-37.

- Removal of Roads. Roads not retained for use under an approved postmining land use will be reclaimed immediately after they are no longer needed for mining and reclamation operations. Roads that are not listed as postmining roads in this section, will be closed to traffic, and all bridges and culverts removed. Prior to reclamation, surface material that is incompatible with the postmining land use and revegetation requirements will be removed from the roads and properly disposed of at the mine site. The main haul road roadbeds will be scarified or ripped to break up the surface. Topsoil will be replaced on the roadbed and the surface revegetated in accordance with the standards set forth in R645. The portal access/haul road is in ~~Pit 10~~open pit containing the underground portals and will be backfilled when no longer needed.

  Roads that will remain postmining are the following:
  - Road to Water Well with details shown on Drawing 5-22D
  - Road to east C. Burton Pugh property (K3993) with details shown on Drawing 5-22C
  - County Road 136 (K3900) with details on Drawing 5-22E, 5-22F and 5-22G for the Coal Hollow Mine permit area and Drawings 5-61 and 5-63 for the North Private Lease. This County road will be reconstructed within the permit areas by Kane County. This reconstruction will occur concurrently with the final stage of reclamation as scheduled on Drawing 5-38 for the Coal Hollow Mine and Drawing 5-76B for the North Private Lease and is expected to be completed by 2017 and year 5 of operations, respectively.
  - Alton Coal Mine Road (K3100) with details on Drawings 5-62 and 5-63. This County road will also be reconstructed within the permit area by Kane County, and will also be constructed concurrently with the final stage of reclamation as shown on Drawing 5-76B. It is expected to be completed by year 5 of operations.
  - Road to Swapp Ranch (same specification as the Water Well Road)

  The location of these roads is shown on Drawings 5-37 and 5-38 along with the post mining topography for each permit area.

- Removal of Water Control Structures. All sedimentation control structures, including ditches, berms and sedimentation ponds not retained as part of the approved post-mining land use will be removed, the areas regraded, topsoiled, and revegetated. All water control structures will be removed at final reclamation. See Appendices 5-12 and 5-12A and Drawing 5-79 for descriptions and plans. ACD has obtained a Nationwide Permit through the US Army Corps of Engineers (SPK 2011-01248) for the crossing of Culvert C-2. ACD will send the Division a copy of the mitigation completion report for this permit along with the Division's annual report in the year which the mitigation is completed. ACD will also notify the Division of completion and approval by the Corp of ACD's application for an

Individual Section 404 permit under the same number. This notification will include a copy of the approval letter and reference to USACOE's public archive for viewing of the permit documents.

Final pit backfilling, removal of buildings, roads and other facilities, along with replacement of topsoil is expected to require approximately 15 months after the last coal is removed.

542.700. Final Abandonment of Mine Openings and Disposal Areas.

Final abandonment of alternative mined highwall panels (See Chapter 9 which addresses R645-302 regulations) will be at the time when completed panels are backfilled as described in Section 529.

Underground mine openings will be closed in accordance with R645-301-513, R645-301-529, R645-301-551 and approved MSHA requirements and backfilled.

When no longer needed for monitoring or other use approved by the Division upon a finding of no adverse environmental or health and safety effects, or unless approved for transfer as a water well under R645-301-731.100 through R645-301-731.522 and R645-301-731.800, each well will be capped, sealed, backfilled, or otherwise properly managed, as required by the Division in accordance with R645-301-529.400, R645-301-631.100, and R645-301-748. Permanent closure measures will be designed to prevent access to the mine workings by people, livestock, fish and wildlife, machinery and to keep acid or other toxic drainage from entering ground or surface waters.

If a water well is exposed by coal mining and reclamation operations, it will be permanently closed unless otherwise managed in a manner approved by the Division.

Permanent closure and abandonment of water wells greater than 30 feet in depth will be in accordance with the requirements of "Administrative Rules for Water Well Drillers", State of Utah, Division of Water Rights or other applicable state regulations. Abandonment of wells will be performed by a licensed water well driller. The wells to be abandoned will be completely filled using neat cement grout, sand cement grout, unhydrated bentonite, or bentonite grout, or other materials approved by the Utah State Engineer's office. Alternatively, the well may be abandoned using a different procedure upon approval from the Utah State Engineer's office.

Abandonment materials will be introduced at the bottom of the well or required sealing interval and placed progressively upward to the top of the well. The casing will be severed a minimum of 2 feet below the ground surface. A minimum of 2 feet of compacted native material will be placed above the abandoned well upon completion.

Within 30 days of the completion of well abandonment procedures, a report will be submitted to the State Engineer by the responsible licensed driller giving data related to the abandonment of the well. This shall include the name of the licensed driller or other person(s) performing abandonment procedures, name of well owner at the time of

abandonment, the address or location of the well by section, township, and range, abandonment materials and equipment used, water right or file number covering the well, the final disposition of the well, and the date of completion.

Exploration holes and boreholes will be backfilled, plugged, cased, capped, sealed, or otherwise managed to prevent acid or toxic contamination of water resources and to minimize disturbance to the prevailing hydrologic balance. Exploration holes and boreholes will be managed to ensure the safety of people, livestock, fish and wildlife, and machinery.

If an exploration hole is exposed by coal mining and reclamation operations, it will be permanently closed unless otherwise managed in a manner approved by the Division.

If any exploration boreholes are to be used as monitoring wells or water wells, these will meet the provisions of R645-301-731

Boreholes will be backfilled to within 1 foot of the land surface with concrete or other materials approved by the Division as necessary to prevent contamination of groundwater or surface-water resources or to protect the prevailing hydrologic balance. The upper approximately 1 foot will be backfilled with native materials to facilitate reclamation (see Drawing 6-11). Exploration holes and boreholes that may be uncovered during mining and reclamation activities will be permanently closed unless approved for water monitoring or otherwise managed in a manner approved by the Division.

542.720. Disposal of Excess Spoil.

A geotechnical analysis has been completed for the proposed long term and temporary excess spoil structures for each permit area. This analysis estimates the long-term safety factor to be 1.6 to 1.7 based on the proposed design. Following proper construction practices of building the structure in maximum four foot lifts and meeting 85% compaction based on the standard Procter will ensure that the structure will be stable under all conditions of construction. This construction will occur only in the designated excess spoil area as shown on Drawings 5-3 and 5-35 for the Coal Hollow Mine and Drawing 5-47, 5-51A and 5-51C for the North Private Lease. The fill will be placed with end dump haul trucks and lifts will be constructed using dozers. High precision GPS systems will be regularly utilized to check grades and appropriate lift thickness. The geotechnical analysis for this structure can be viewed in Appendix 5-1 for the Coal Hollow Mine and Appendix 5-11 for the temporary structures at the North Private Lease. Following the completion of surface mining in the highwall trench, backfill operations from the long-term excess spoil structure to the open pit has been ongoing to bring both the spoil structure and highwall trench areas to AOC. It is anticipated that backfill of the highwall trench will be completed by the 9th of June, 2016. Therefore, a small portion (apx. 250k C.Y.) of the long-term excess spoil structure may remain at the Coal Hollow Mine until final backfill of ~~Pit 10~~open pit containing the underground portals. In preparation for final borrow, Pit B-1 (as shown on Drawing 5-10) will be excavated and simultaneously backfilled to remove all coal from the borrow volume to reach the intermediate landform depicted in Drawings 5-35 and 5-36. Then, following the

completion of underground mining, backfill of ~~Pit 10~~the pit containing the underground portals will be completed utilizing borrow from the areas delineated in Drawings 5-19 and 5-37. Final backfill will require approximately 1.5 Million C.Y. of borrow material, but will still achieve AOC.

Excess spoil that is combustible will be adequately covered with noncombustible material to prevent sustained combustion.

542.730. Disposal of Coal Mine Waste.

The MRP does not contemplate processing of coal that would produce coal mine waste.

542.740. Disposal of Noncoal Mine Wastes.

Noncoal mine waste including, but not limited to grease, lubricants, paints, flammable liquids, garbage, abandoned mining machinery, lumber and other combustible materials generated during mining activities will be placed and temporarily stored in a controlled manner in a designated portion of the permit area and hauled offsite to a state approved recycling or solid waste disposal site. Final disposal of noncoal mine waste will not take place within the permit area. With the exception of removal of perforated piping used in the construction of Alluvial Ground Water Drains that will be left in place as mining advances and water line piping. This perforated piping will be covered in place approximately 20’ to 30’ below the final reclaimed surface. All other waste materials (ie. metal culvert) associated with the Alluvial Ground Water Drains will be removed and disposed of in a State-approved solid waste disposal site. The buried water line from the well to the Coal Yard, all buried water pipe within the Coal Yard and the buried water line from the tank East of Pit 10 will be cut off 4’ below the final surface, capped and left in place.

542.800. Reclamation Cost.

The amount of the bond will depend upon the requirements of the ***approved*** permit and reclamation plan (R645-830.120).

A preliminary estimate of reclamation costs is included in Chapter 8 and Appendices 8-1 and 8-2. This estimate is based upon the proposed plan of open pit, highwall and underground mining, as well as eventual borrow to backfill ~~Pit 10~~the pit containing the underground portals at the conclusion of underground mining. A final bond estimate will be provided by the applicant to the Division upon completion of the approved permit and reclamation plan.

550. RECLAMATION DESIGN CRITERIA AND PLANS

551. SEALING AND CASING OF UNDERGROUND OPENINGS

When no longer required, underground mine openings will be closed in accordance with R645-301-513, R645-301-529, R645-301-551 and MSHA approved requirements and backfilled. When no longer needed for monitoring or other use approved by the Division upon a finding of no adverse environmental or health and safety effects, or unless approved for transfer as a water well under R645-301-731.100 through R645-301-731.522 and R645-301-731.800, each well will be capped, sealed, backfilled, or otherwise properly managed, as required by the Division in accordance with R645-301-529.400, R645-301-631.100, and R645-301-748. Permanent closure measures will be designed to prevent access to the mine workings by people, livestock, fish and wildlife, machinery and to keep acid or other toxic drainage from entering ground or surface waters.

If a water well is exposed by coal mining and reclamation operations, it will be permanently closed unless otherwise managed in a manner approved by the Division.

Permanent closure and abandonment of water wells greater than 30 feet in depth will be in accordance with the requirements of "Administrative Rules for Water Well Drillers", State of Utah, Division of Water Rights or other applicable state regulations. Abandonment of wells will be performed by a licensed water well driller. The wells to be abandoned will be completely filled using neat cement grout, sand cement grout, unhydrated bentonite, or bentonite grout, or other materials approved by the Utah State Engineer's office. Alternatively, the well may be abandoned using a different procedure upon approval from the Utah State Engineer's office.

Abandonment materials will be introduced at the bottom of the well or required sealing interval and placed progressively upward to the top of the well. The casing will be severed a minimum of 2 feet below the ground surface. A minimum of 2 feet of compacted native material will be placed above the abandoned well upon completion.

Within 30 days of the completion of well abandonment procedures, a report will be submitted to the State Engineer by the responsible licensed driller giving data related to the abandonment of the well. This shall include the name of the licensed driller or other person(s) performing abandonment procedures, name of well owner at the time of abandonment, the address or location of the well by section, township, and range, abandonment materials and equipment used, water right or file number covering the well, the final disposition of the well, and the date of completion.

Exploration holes and boreholes will be backfilled, plugged, cased, capped, sealed, or otherwise managed to prevent acid or toxic contamination of water resources and to minimize disturbance to the prevailing hydrologic balance. Exploration holes and boreholes will be managed to ensure the safety of people, livestock, fish and wildlife, and machinery.

If an exploration hole is exposed by coal mining and reclamation operations, it will be permanently closed unless otherwise managed in a manner approved by the Division. If any exploration boreholes are to be used as monitoring wells or water wells, these will meet the provisions of R645-301-731

Boreholes will be backfilled to within 1 foot of the land surface with concrete or other materials approved by the Division as necessary to prevent contamination of groundwater or surface-water resources or to protect the prevailing hydrologic balance. The upper approximately 1 foot will be backfilled with native materials to facilitate reclamation (see Drawing 6-11). Exploration holes and boreholes that may be uncovered during mining and reclamation activities will be permanently closed unless approved for water monitoring or otherwise managed in a manner approved by the Division.

552. **PERMANENT FEATURES**.

552.100

Small depressions may be constructed if they are needed to retain moisture, minimize erosion, create and enhance wildlife habitat, or assist revegetation.

552.200

All impoundments will be reclaimed, no permanent impoundments are proposed.

553 **BACKFILLING AND GRADING:**

Backfilling and Grading of the mined areas will proceed in conjunction with coal recovery operations.

The following is a description of the overburden removal and backfilling process:

For the Coal Hollow Mine, based on the overburden isopach map (Drawing 5-15), the overburden removal and backfilling process has been separated into three major stages. The first stage of this process is for the initial mining area, Pits 1-9. These pits have a relatively low strip ratio, approximately 4:3 (refer to Drawing 5-13). In order to efficiently remove overburden for this phase, spoil from the first three pits will be placed in an excess spoil area located immediately west of Pit 1. This excess spoil structure will hold approximately 2.7 million loose cubic yards (LCY) of material. Once the excess spoil pile is filled, overburden from the next 5 pits can then be used as pit backfill as the mining progresses through Pit 9. Pit 9 will not be backfilled at this stage; it has been left open for placement of the highwall miner (See Chapter 9 which addresses R645-302 regulations) to recover coal from panels 1-3.

From the initial mining area, operations will proceed from the southeast ¼ of Section 30, beginning with pit 28 and proceeding north to pit 20. Material from pit 28 was place in

the excess spoil structure with overburden material from successive pits to the north being placed in the mined out pit to the south. These pits were not mined as initially laid out due to the coal being eroded in the eastern half of pit 28 and numerous sand channels replacing much of the coal in the eastern portions of pit 22-27. These pits as mined have a relatively low strip ratio of approximately 5.0:2. While overburden removal was occurring in pit 22, coal recovery was occurring from the pit 9 highwall panels. In this method of mining, an unmanned cutter module is driven underground and operated in front of the highwall. The highwall mining machine stands on the pit floor or on a bench, directly in front of the exposed seam and makes long parallel rectangular drives into the coal seam. A remote-operated cutter module is pushed into the seam by a string of push beams (unmanned coal-conveying elements) that transport the mined coal back to the entry of the drive onto a stockpile. Coal is then removed to the sizing/loading area. The miner is moved along the face making successive pushes into the coal face. Once coal is removed from the Pits/ Highwall Trench, overburden from excavation of the next Highwall Trench is used to backfilled the mined out area continuing with the progression of the trench. In hole 27 of Pit 9 Panel 3, the highwall miner head became lodged. Another head was leased in order to continue highwall mining from pits 22 and 23 while a recover plan was approved to mine Pit 10 and recover the lodged miner head.

In Stage three, Pit 21 was then mined along with the highwall panels in 21, then Pit10. The strip ratio for these two pits was 8.0 and 12.1 respectively. Overburden was placed in the pits to the south from pit 21 and in pit 9 from pit 10~~. Pit 10 will remain open for development of the underground portals and remain open until all underground coal is mined. There will be no additional overburden removal associated with the underground mining~~. Surface mining will continue with mining of Highwall Trench (HWT) 1 continuing south to HWT 3. The strip ratio for the highwall trench is 10.3:1. Overburden from HWT 1 will fill the remaining pit 9 with material from HWT 2 and 3 filling the previously mined portions of highwall trench and any remaining void in Pits 9, 20, 21, and 22.

Following the completion of surface mining in the highwall trench, backfill operations from the long-term excess spoil structure to the open pit has been ongoing to bring both the spoil structure and highwall trench areas to AOC. It is anticipated that backfill of the highwall trench will be completed by the 9th of June, 2016. Therefore, a small portion (apx. 250k C.Y.) of the long-term excess spoil structure may remain at the Coal Hollow Mine until final backfill of ~~Pit 10~~Pit F-8 or the open pit containing the underground portals (see discussion of federal pits below). In preparation for final borrow, Pit B-1 (as shown on Drawing 5-10) has been excavated and simultaneously backfilled to remove all coal from the borrow volume to reach the intermediate landform depicted in Drawings 5-35 and 5-36. Mining of Pit B-1 will begin by dozing a thin layer (apx. 5 ft) of overburden covering the eastern extent of Pit B-1 from east to west in a strip 50 to 100 ft wide to create a temporary overburden berm. The coal underneath this first strip will then be extracted leaving a void into which the berm and subsequent strip overburden can be placed. The coal strips will progress from east to west, with dozing and potentially truck haulage replacing the stripped overburden into the coal voids from west to east. Mining slopes will be maintained at a 1:1 face angle for mining benches under 50 ft. Above 50 ft., a 40 ft. catch bench will be installed between 40 ft. 1:1 benches. Additional fill

material will be sourced from the adjacent pit slopes as necessary to establish the final 3:1 slope on the South pit wall and to meet the intermediate design surface depicted in Drawings 5-35 and 5-36. As shown on in these drawings, this pit is nearly fully contained within the greater Borrow Area but will require approximately 91,000 CY of backfill material to establish the final 3:1 slope on top of the 1:1 operational slope and bench on the South pit wall. This 91,000 CY will remain in place in the final slope and will not be recovered in the final borrow. The remaining backfill will then remain in place until closure of the Underground Mine and finally rehandled as backfill to the open ~~P~~pit containing the underground portals~~s 9-C and 10~~. Final backfill will require approximately 1.5 Million C.Y. of borrow material, but will still achieve AOC.

Following approval of the Federal LBA and acquisition of necessary leases, mining and reclamation will continue into pits 10-B and Pits F-1 to F-8 as shown on Drawings 5-10 and 5-16, with material from Pits 10-B and F-1 being placed in Pits 10-A and 10-C as backfill. These pits will be mined and backfilled with the same methods described above and will progress from South to North while directly backfilling to the South. At no point during the development and extraction of Pits 10-B to F-8 will overburden removal extend beyond the Tropic Shale ridge located directly to the east of these pits. Coal extraction via underground mining or highwall mining may extend under and beyond this ridge, but overburden removal would result in potential impacts to the groundwater aquifer and would first require an update to the PHC document included as an appendix to Chapter 7 of this MRP. Mining and concurrent backfill of Pits 10-B to F-8 will result in the backfill of the current underground portal area, so that as mining finishes in Pit F-8 the pit will be left open in anticipation of development of another portal with the borrow area serving to provide eventual backfill. As permitting of the larger LBA continues, subsequent amendments will address the final location of the portal pad and further plans for underground mining as well as any potential changes to backfill sourcing. The reclamation sequence for the Coal Hollow Mine is shown in Drawing 5-38.

The following table summarizes the overburden and backfill movement for the Coal Hollow Mine:

Coal Hollow Mine Overburden Summary	
2011	2,065,000 CY
2012	3,582,000 CY
2013	3,090,500 CY
2014	3,423,600 CY
2015	1,613,000 CY
2016	277,000 CY
2017	0
2018	0
2019	5,196,600 CY
2020	5,032,300 CY
Borrow	1, 516,200 CY

Total	25,796,200 CY

Rough backfilling and grading operations will follow coal removal by not more than 60 days or 1500 linear feet except that the final open pit will remain open until removal of underground coal is complete. Another possible exception would be the necessity of leaving a block of approximately 200' X 600' of North Private Lease Pit 9 open pending final approval of continued mining in Areas 2 and 3. Should approval of Areas 2 and 3 for further mining be delayed, the block would need to remain open until construction of Pond 7 was completed, so that mining and backfilling of Pit 9 could progress through Pond T1. As shown on Drawing 5-76A, under any final circumstance that disallows continuation of mining from the extension of Area 1 into Areas 2 and 3, the final pit void remaining in Pits 9 will be backfilled from backfill borrow upgradient to the West while achieving AOC in both areas.

For the North Private Lease, the lease boundary encompasses three Permit Areas.

Based on the overburden isopach map (Drawing 5-56), the overburden removal has been separated into three major stages. The initial area of overburden removal is the mining area, Pits 1-10. These pits have a relatively low strip ratio, approximately 4.6:1 (refer to Drawing 5-54). In order to efficiently remove overburden for this phase, spoil from pit 1 and pit 2 will be placed in a temporary excess spoil area on the area of pits 5 and 6. This excess spoil structure will hold approximately 506,000 loose cubic yards (LCY) of material. Once the excess spoil pile is filled, overburden from the remaining pits can then be used as pit backfill as the mining progresses through Pit 10, also as pit 4 is completed, material from the temporary spoils pile can be placed in pit backfill.

From the initial mining area, operations will proceed North from Pit 11to Pit 21. These pits have a strip ratio increasing from 4.7:1 to 9.6:1. All spoils are placed in the proceeding void or in the NW temporary spoil stockpile in preparation for final backfill of Pit 21.

The final mining area will be developed on the East side of Kanab Creek. Overburden removal from Highwall Trench 1 will proceed north in the trench with overburden being placed directly as backfill in the same highwall trench, progressing from South to North.

For start-up of the North Private Lease, some delay is unavoidable in reclamation of the initial mining areas due to the time required to establish the initial working pit and backfill area, and to achieve a steady state excavation/backfill operation. In accordance with R645-301-553, backfill of each pit will commence no more than 60 days after the removal of coal. As currently planned, Pits 1 and 2 will be backfilled to the planned post mining contour, graded, and the subsoil and topsoil replaced concurrently with mining of Pits 3, 4, and 5. Depending on the timing of approval for Areas 2 and 3, mining and backfill in the extension of Area 1 (which contains Pits 7, 8 and 9) may be limited as shown in Drawing 5-57 by Pond T1 and the geologic contact between Tropic Shale and Quaternary Alluvium in Pits 8 and 9. Temporary Pond T1 must remain in place until

Pond 7 has been constructed and no alluvium will be mined until the hydrologic analysis of Areas 2 and 3 has been performed and approved. Once these approvals are obtained, the Area 2 facilities will be constructed and Pond T1 and the other Area 1 extension temporary facilities will be removed or mined out by advancing pits. Reclamation activities will proceed at the regular planned rate thereafter. As mining progresses through Pit 21 the semi-final pit void will require approximately 1,600,000 cubic yards to be rehandled from the backfill located above the final landform depicted in Drawing 5-74 previously placed in the adjacent pits or in the NW temporary spoil stockpile. No other borrow or rehandle will be necessary from the highwall trench area, but the final landform depicts the previously approved borrow configuration of the topographic ridge should the operational need for material arise. Either configuration of this ridge will provide that natural landform, post-mining land use, and drainage will be maintained or improved. In the case where borrow from the area east of Kanab Creek is not necessary, the material void will not occur and post-mining topography will achieve AOC while closely mirroring original topography as shown on Drawing 5-45. As borrow from this area East of Kanab Creek is unlikely, bond coverage for disturbance and mining of this area has been sterilized. Any planned disturbance in this area would require recalculation of the bond and an amendment to the MRP.

Of note, erosional scours and the stock ponds identified on Drawing 7-7 within the center and western drainages existing prior to mining will be eliminated per the landowner request. This requires coordination with the USACOE for the elimination of wet lands (final landform shown on Drawings 5-74 and 5-75) identified in the Preliminary Jurisdictional Determination SPK-2011-01248 November of 2012 and updated September 2015 (MRP, Volume 10, NPL Wetland Study Report Final). Disturbances within the identified wetlands will not occur until approval of the 404 permit. The 404 permit will allow for take of the wetlands within the center drainage with wetlands being replaced in offsite mitigation under USCOE jurisdiction.

The following table summarizes overburden movement for the North Private Lease.

North Private Lease Overburden Summary	
Year 1	2,013,603 CY
Year 2	2,414,827 CY
Year 3	3,429,000 CY
Year 4	3,429,000 CY
Year 5	3,456,000 CY
Year 6	3,456,000 CY
Year 7	1,254,600 CY
Total	19,453,030 CY

Major steps in the backfilling and grading process for both permit areas are:

- Backfilling of the Mined Out Pit. Material from active pits will be used to backfill mined out pits as mining progresses. Material will be placed in the in-pit backfill in lifts, until the approximate planned final elevation is reached. Working stability in the backfill will be achieved by placement of the material, and control of the overall spoil face slope at stable angles. The mined out area will be filled to its planned post-mining elevation, which approximates the pre-mining land contour. The backfill will be inherently stable because the exposed surface will have shallow slopes, and the backfill surface will not be significantly higher than the surrounding undisturbed ground.
- Backfilling of Ramps. Ramps and travelways within the active mining will be moved as necessary for safe operation and efficient hauling of overburden and coal. When a particular ramp or travelway is no longer needed, it will be backfilled with excavated overburden from the advancing pit.
- Grading. After backfilling is complete in each mined out area, the area will be graded using dozers and motor graders to achieve the planned post-mining contour, facilitate stable positive drainage patterns, and to blend in with the surrounding topography. Postmining slopes will not exceed either the angle of repose or such lesser slope as is necessary to achieve a minimum long-term static safety factor of 1.3 and prevent slides. A geotechnical analysis has been completed for the excess spoil structure and can be found in Appendix 5-1.

Timing of backfilling and grading operations will depend on the rate of mine advance and the availability of backfill space and material. It is planned that mined areas will commence backfilling and grading within 60 days following coal removal. As described in the previous text there will be a variance from this standard for the final pit of the Coal Hollow Mine as it remains open during underground mining operations. Also, as the North Private Lease progresses toward Pit 21 in the North of Permit Area 2 and accumulates an ever-growing void, the width of the void space increases but never exceeds 400 ft., therefore the area in the void may take slightly longer to commence backfill activities than the standard 60 days. This will be immediately resolved once mining commences in the Highwall Trench on the eastern side of the permit area. Areas needed for in-pit roads, ramps, drainage controls or areas which must be left open temporarily for operational reasons will be backfilled and graded as they become available.

553.110

All areas will be restored to approximate original contour for the Coal Hollow Mine as shown on Drawing 5-37. R645-301-553.800 (Thick Overburden) does not apply to this surface mine. The slopes will be regraded to a maximum angle of 3h:1v and most slopes are flatter as shown on Drawing 5-37 and 5-37A. A geotechnical analysis has been completed to verify that the spoil material will be stable long term. This analysis can be viewed in Appendix 5-1.

All areas will be restored to approximate original contour for the North Private Lease as shown on Drawings 5-74 and 5-75. R645-301-553.700 (Thin Overburden) does not apply

to this surface mine. The slopes will be regraded to a maximum angle of 3h:1v and most slopes are flatter as shown on Drawing 5-74 and 5-75. A geotechnical analysis has been completed to verify that the spoil material will be stable long term. This analysis can be viewed in Appendix 5-11.

553.120

All highwalls will be eliminated in the final landform. Small depressions may be constructed as needed to retain moisture, minimize erosion, create and enhance wildlife habitat or assist vegetation. All spoil piles will be eliminated as shown on Drawing 5-37.

553.130

Postmining slopes for both permit areas will not exceed the angle of repose which is expected to be approximately 1.5h:1v (33° to 35°) as described in Appendix 5-5. This appendix is an analysis by Dr. Ben Seegmiller addressing the safety factor for the post mining reclaimed slope with the lowest safety factor outside the excess spoil area. This analysis concludes that a minimum safety factor of these slopes reclaimed with a planned maximum slope angle of 3h:1v (18.4°) will be 1.7 which exceeds the requirement of 1.3. Appendix 5-5 also states that this planned reclaim slope angle is much less than the general area angle of repose. In fact it is at least 14° less. Therefore, postmining slopes reclaimed at the planned angle of 3h:1v (18.4°) are considered stable.

The excess spoil slopes have been analyzed by Alan Taylor, P.E., an expert in geotechnical engineering. These slopes also significantly exceed the required 1.3 safety factor. Details for this analysis by Mr. Taylor can be viewed in Appendix 5-1.

553.140

Slopes will be regraded and vegetated to minimize erosion and water pollution on and off the site.

553.150

Backfilling and grading will be conducted to support the approved post mining land use.

553.200 <u>Spoil and Waste</u>.

Spoil located in each of the excess spoil areas will be compacted to 85% of the standard Procter to provide long term stability of these structures. Remaining backfill in mined out areas will be confined and regraded to approximate original contour and will therefore not require compaction for long term stability. Subsoil will be placed over

spoils and waste prior to placement of topsoil. This subsoil layer will provide a covering with minimal infiltration rate to prevent leaching of toxic materials.

553.210

Excess spoil from surface mining activities will be disposed of according to R645-301-211, R645-301-212, R645-301-412.300, R645-301-512.210, R645-528.310, R645-301-535.100 through R645-301-535.130, R645-301-535.300 through R645-301-535.500, R645-536.300, R645-301-542.720, R645-301-553.240, R645-301-745.100, R645-301-745.100, R645-301-745.300, and R645-301-745.400. Detail for meeting these standards can be reviewed in the corresponding sections.

553.220

The MRP does not contemplate placing spoil on areas outside the mined-out surface area for the purposes of restoring the approximate original contour.

553.300. Covering of Exposed Coal Seams, and Acid- and Toxic-Forming Materials.

Exposed coal seams, acid- and toxic-forming materials, and combustible materials exposed, used, or produced during mining will be adequately covered with nontoxic and noncombustible materials, or treated, to control the impact on surface and ground water in accordance with R645-301-731.100 through R645-301-731.522 and R645-301-731.800, to prevent sustained combustion, and to minimize adverse effects on plant growth and on the approved postmining land use.

553.400. Cut and Fill Terraces

The MRP does not contemplate constructing cut and fill terraces.

553.500. Previously Mined Areas (PMA's) and Continuously Mined Areas (CMA's).

The MRP does not contemplate operations associated with PMA’s, CMA’s, or areas with remaining highwalls.

553.600. Highwall Management

The MRP does not contemplate operations associated with PMA’s, CMA’s, or areas with remaining highwalls.

553.700. Backfilling and Grading: Thin Overburden.

The Coal Hollow project is expected to have approximately 1.5 million cubic yards of spoil shortfall; but ACD proposes to make up for this void and still meet approximate

original contour by handling approximately 1.5 million cubic yards of material from a borrow area as shown in Drawings 5-19, 5-37 and 5-37A to complete backfill of ~~Pit 10~~ the pit containing~~and~~ the underground portals. In so doing, a surface configuration and drainage pattern that closely resemble original conditions will be achieved so that neither R645-301-553.700 nor 301-553.800 apply to the Coal Hollow Mine permit area.

For the North Private Lease, based on updated swell factors of mined material found in Appendix 5-11, mining is expected to result in a deficit of spoil of approximately 1.0 million cubic yards from original topography. ACD proposes to make up for this void and still meet approximate original contour utilizing the designed post mining landform depicted in Drawings 5-74 to 5-75. This landform accounts for the deficit while ensuring that a surface configuration and drainage pattern that closely resemble original conditions will be achieved so that neither R645-301-553.700 nor 301-553.800 apply to the North Private Lease permit area.

553.800. Backfilling and Grading: Thick Overburden.

553.810

This rule does not apply to either the Coal Hollow Mine or the North Private Lease.

553.820 - 553.830

Backfilling and Grading of thick overburden will meet the following requirements:

- *R645-301-211: The applicant will present a description of the premining soil resources as specified under R645-301-221. Topsoil and subsoil to be saved under R645-301-232 will be separately removed and segregated from other material.*

  The soil resources for the proposed excess spoil disposal areas are described in Appendix 2-1. A plan has been developed for removal of topsoil and suitable subsoil based on the soil descriptions in this appendix. The handling plan can be viewed on Drawing 2-2. Topsoil and acceptable subsoil will be separately removed and segregated from other material prior to placement of any spoil.

- *R645-301-212: After removal, topsoil will be immediately redistributed in accordance with R645-301-242, stockpiled pending redistribution under R645-301-234, or if demonstrated that an alternative procedure will provide equal or more protection for the topsoil, the Division may, on a case-by case basis, approve an alternative;*

  The landform underneath the Excess spoil will have topsoil and subsoil redistributed in an approximately uniform, stable thickness with the approved post mining land use, contours and surface water drainage systems. Material handling practices will prevent excess compaction of these materials. Handling practices

will also protect the materials from wind and water erosion before and after seeding and planting.

- *R645-301-412.300: Criteria for Alternative Postmining Land Uses.*

  Not Applicable

- *R645-301-512.210: Excess Spoil. The professional engineer experienced in the design of earth and rock fills will certify the design according to R645-301-535.100.*

  A professional engineer experienced in the design of earth and rock fills with assistance from a geotechnical expert has certified the design according to R645-301-535.100. These certifications can be viewed on Drawings 5-37, 5-37A, 5-47, 5-51A, 5-51C and 5-17.

- *R645-301-512.220: Durable Rock Fills*

  No durable rock fills are planned.

- *R645-301-514.100: Excess Spoil. The professional engineer or specialist will be experienced in the construction of earth and rock fills and will periodically inspect the fill during construction. Regular inspections will also be conducted during placement and compaction of fill materials.*

  A professional engineer or specialist that is experienced in the construction of earth and rock fills will inspect the fill during construction and regular inspections will also be conducted during placement and compaction of fill materials.

- *R645-301-528.310: Excess spoil will be placed in designated disposal areas within the permit areas within the permit area, in a controllable manner to ensure mass stability and prevent mass movement during and after construction. Excess spoil will meet the design criteria of R645-301-535. For the purposes of SURFACE COAL MINING AND RECLAMATION ACTIVITIES, the permit application must include a description of the proposed disposal site and the design of the spoil disposal structures according to R645-301-211, R645-301-212, R645-301-412.300, R645-301-512.210, R645-528.310, R645-301-535.100 through R645-301-535.130, R645-301-535.300 through R645-301-535.500, R645-536.300, R645-301-542.720, R645-301-553.240, R645-301-745.100, R645-301-745.100, R645-301-745.300, and R645-301-745.400.*

  Excess spoil will be placed in the areas designated on Drawings 5-3 and 5-37 for the Coal Hollow Mine. This fill will be placed in lifts not to exceed 4 feet. The material will be transported from the overburden removal area to the fill by end dump haul trucks and a dozer(s) will spread the spoil to this lift thickness. The fill will meet at minimum 85% compaction as related to the standard Procter.

Final slopes will be regraded to a maximum slope of 3h:1v. The top of the fill will be sloped to approximately 2% to prevent pooling of water and to reestablish drainage similar to the original flow patterns. The excess spoil placed on the non-mined areas at the Coal Hollow Mine is approximately 32 acres and varies in height from 35 to 110 feet. The excess spoil pile will be completely rehandled as pit backfill prior to final reclamation. Following the completion of surface mining in the highwall trench, backfill operations from the long-term excess spoil structure to the open pit has been ongoing to bring both the spoil structure and highwall trench areas to AOC. It is anticipated that backfill of the highwall trench will be completed by the 9th of June, 2016. Design and the geotechnical study of this long-term fill can be viewed in Appendix 5-1.

- *R645-301-535.100 through R645-301-130: Disposal of Excess Spoil*

  A geotechnical analysis of the excess spoil structure designs has been completed by an expert in this field. The long term static safety factor for these structure designs is estimated at 1.6 to 1.7. Lifts will be placed in thicknesses not to exceed 4 feet. The lifts will meet 85% compaction by the standard Procter. The fills will be graded to allow for drainage similar to original patterns and to prevent excessive infiltration of water. For the Coal Hollow Mine, following the completion of surface mining in the highwall trench, backfill operations from the long-term excess spoil structure to the open pit have been ongoing to bring both the spoil structure and highwall trench areas to AOC. It is anticipated that backfill of the highwall trench will be completed by the 9th of June, 2016. The landform beneanth the fill will be covered with subsoil and topsoil as specified in Chapter 2 to provide conditions suitable for revegetation of the area. The geotechnical study can be viewed in Appendix 5-1for the Coal Hollow Mine.

- *R645-301-535.300 through R645-301-535.500: Disposal of Excess - Spoil Durable Rock Fills.*

  Not Applicable

- *R645-301-536.300: Disposal of Coal Mine Waste in Excess Spoil*

  No coal mine waste is planned in the excess spoil area.

- *R645-301-542.720: Excess spoil will be placed in designated disposal areas within the permit area, in a controlled manner to ensure that the final fill is suitable for reclamation and revegetation compatible with the natural surroundings and the approved postmining land use. Excess spoil that is combustible will be adequately covered with noncombustible material to prevent sustained combustion. The reclamation of excess spoil will comply with the design criteria under R645-301-553.240.*

The landform beneath the Coal Hollow Mine long term excess spoil as shown in Drawing 5-37 and 5-37A will be suitable to the surrounding area and for the postmining land use of primarily grazing. No combustible excess spoil will be placed in the proposed structure. The reclamation of the spoil does not include any terraces and the slopes will not exceed 3h:1v.

- *R645-301-553.240: The final fill configuration of the fill (excess spoil) will be suitable for the approved postmining land use. Terraces may be constructed on the outslope of the fill if required for stability, control of erosion, to conserve soil moisture, or to facilitate the approved postmining land use. The grade of the outslope between terrace benches will not be steeper than 2h:1v (50 percent).*

  The landform beneath the Coal Hollow Mine excess spoil as shown in Drawings 5-37 and 5-37A will be suitable to the surrounding area and for the postmining land use of primarily grazing. The reclamation of the spoil does not include any terraces and the slopes will not exceed 3h:1v. This slope angle has been utilized at similar mining operations and found to be suitable for erosion control and revegetation of reclaim slopes. The long term static safety factor for these slopes is estimated to be 1.6 to 1.7.

- *R645-301-745.100: General Requirements.*

  745.110: Excess Spoil will be placed in designated disposal areas within the permit area, in a controlled manner to:

  745.111: Minimize the adverse effects of leaching and surface water runoff from the fill on surface and underground water;

  Reclamation of the landform beneath the Coal Hollow long term excess spoil will include a topsoil cover and subsoil layer. Infiltration through the reclamation is expected to be minimal based on the high clay content of these soils. In addition, laboratory data for the overburden shows that there is minimal potential for leaching of pollutants should infiltration rates become higher than expected.

  The foundation of the excess spoil area also has high clay content with minimal potential for infiltration. This will provide an additional, natural barrier to protect ground water present beneath the proposed structure.

  745.112: Ensure permanent impoundments are not located on the completed fill. Small depressions may be allowed by the Division if they are needed to retain moisture or minimize erosion, create and enhance wildlife habitat or assist revegetation, and if they are not incompatible with the stability of the fill; and

  Permanent impoundments are not planned on the excess spoil area. Small depressions are also not planned in the excess spoil and are not viewed as a

necessary enhancement to final reclamation based on average annual moisture data and the proposed slope configuration of the pile.

745.113: Adequately cover or treat the excess spoil that is acid- and toxic forming with nonacid nontoxic material to control the impact on the surface and ground water in accordance with R645-301-731.300 and to minimize adverse effects on plant growth and approved postmining land use.

Laboratory data representative of the overburden planned for disposal in the excess spoil area does not show acid- and toxic forming characteristics.

745.120: Drainage Control. If the disposal area contains springs, natural or manmade water courses, or wet weather seeps, the fill design will include diversions and underdrains as necessary to control erosion, prevent water infiltration into the fill and ensure stability.

A spring and seep survey available in Chapter 7 has identified no springs or wet weather seeps in the proposed excess spoil area. The final surface will be regraded to a contour that will route natural water from snowmelt and rainfall around the excess spoil as shown on the final contours Drawing 5-37. There are no manmade water courses present in the excess spoil area. No underdrains are planned for the excess spoil structure.

745.121: Diversions will comply with the requirements of R645-301-742.300

No diversions are planned in the excess spoil area.

745.122 : Underdrains

No underdrains are planned in the excess spoil area.

745.300: Durable Rock Fills

No Durable Rock fills are planned.

745.400: Preexisting Benches

The MRP does not contemplate disposal of excess spoil on preexisting benches.

Alton Coal Development, LLC will provide the Division, as part of the annual report for each calendar year, Drawing 5-38 for the Coal Hollow Mine and Drawing 5-76A and 5-76B for the North Private Lease. The Drawings will provide an as-built of the reclamation sequence, depicting the acres of open pit and /or trench, the acres backfilled, the acres fully reclaimed (topsoiled and seeded) and revisions to the reclamation timetable. This information will be submitted by March 28th of each calendar year with the appropriate C1/C2.

560. Performance Standards

Coal mining and reclamation operations will be conducted in accordance with the approved permit and requirements of R645-301-510 through R645-301-553.

COUNTY RD 136

COUNTY RD INTERSECTION

TEMPORARY REROUTE COUNTY RD136

DIVERSION DITCH 3

OFFICE & BATHOUSE AREA
12" Culvert 17
ROADWAY
18" Culvert 13
18" Culvert 12
18" Culvert 1
18" Culvert 2
18" Culvert 3
18" Culvert 4
Pond 1
24 INCH DROP PIPE SPILLWAY
TOP OF RISER 6918'
BOTTOM OF RISER 6917'
24 INCH PIPE OUTLET 6915'
CULVERT 5 - 12"
Pond 1B
24 INCH DROP PIPE SPILLWAY
Straw Bale (Sediment Control)
COUNTY ROAD 136 CLOSURE POINT
24 INCH CULVERT OUTLET 6897'
24 INCH CULVERT INLET 6901'
Air Monitor Site

Berm
Bone Yard
WATER TANKS
18" Culvert 7
36" Culvert 8
18" Culvert 6
96" Culvert 9
24" Culvert C-1
24" Culvert 14
24" Culvert 10
24" Culvert 15
Pond 2
24" Culvert 11
24" Culvert 16
24" Culvert C-2

Lower Robinson Creek

Range 6 West
Range 5 West

DIVERSION DITCH 4
(Configuration will change as mining progresses)

Primary Haulroad

Ditch 4-A-D
Removed as part of Primary Haul Road reclamation

Ditch 4-A-U
Removed after backfill of Pit 10

Weather Monitor Site

DIVERSION DITCH 4 -
To be re-aligned following completion of UG mining and commencement of borrow.
(See Dwg. 5-25)

POND 3 ACCESS ROAD
(To be placed over subsoil as reclamation progresses, then re-aligned during final borrow)

18" Culvert CR-1

BURIED PIPE

18" Culvert CR-2

Diversion Ditch 1

Ditch 4-A-R
Remains as edge-of-road ditch when Primary Haul Road transitions to Pond 3 access road.
Removed after backfill of Pit 10

Total Disturbed 414.5 acres

Sink Valley Wash

Ditch B-1T-L
Constructed Prior to Mining of Pit B-1, remains in place as Pit B-1 reaches pit extents, then mined out during final borrow.

Ditch B-1T-U
Constructed Prior to Mining of Pit B-1, then mined out as Pit B-1 reaches pit extents.

18" Culvert CR-3

Install silt fence downgradient of Ditch B-1T-U.
Constructed Prior to Mining of Pit B-1, remains in place as Pit B-1 reaches pit extents, then mined out during final borrow.

Pond 2

COUNTY ROAD 136 CLOSURE POINT

N

0 500 1000 1500

Township 39 South

CONTOUR INTERVAL = 2'

LEGEND:
- PERMIT BOUNDARY
- PRIVATE COAL OWNERSHIP
- COAL RECOVERY LINE
- SECTION LINE
- FOUND SECTION CORNER
- FOUND PROPERTY CORNER
- DIVERSION DITCHES
- BERM
- 2019 BONDED DISTURBANCE
- CENTERLINE
- WATER LINE
- WATER TANK / WELL

DRAWN BY:	CHECKED BY:
C. McCOURT G. Grossman	CRM/WES
DRAWING: 5-3	DATE: 11/10/08
	SCALE: 1" = 500' on 24" X 36" paper
JOB NUMBER: 1400	SHEET

REVISIONS

DATE:	BY:
8/01/16	AC
9/20/16	AC
3/3/17	AC
3/23/17	AC
6/7/17	AC
8/13/18	AC
1/29/20	AC

FACILITIES & STRUCTURES

LAYOUT

COAL HOLLOW PROJECT
ALTON, UTAH

DRAWING: 5-3

PROFESSIONAL ENGINEER
10230818
ANDREW R. CHRISTENSEN
STATE OF UTAH

Alton Coal Development
Coal Hollow Project
463 North 100 West, Suite 1
Cedar City, Utah 84720
Phone (435) 867-5331
Fax (435) 867-1192

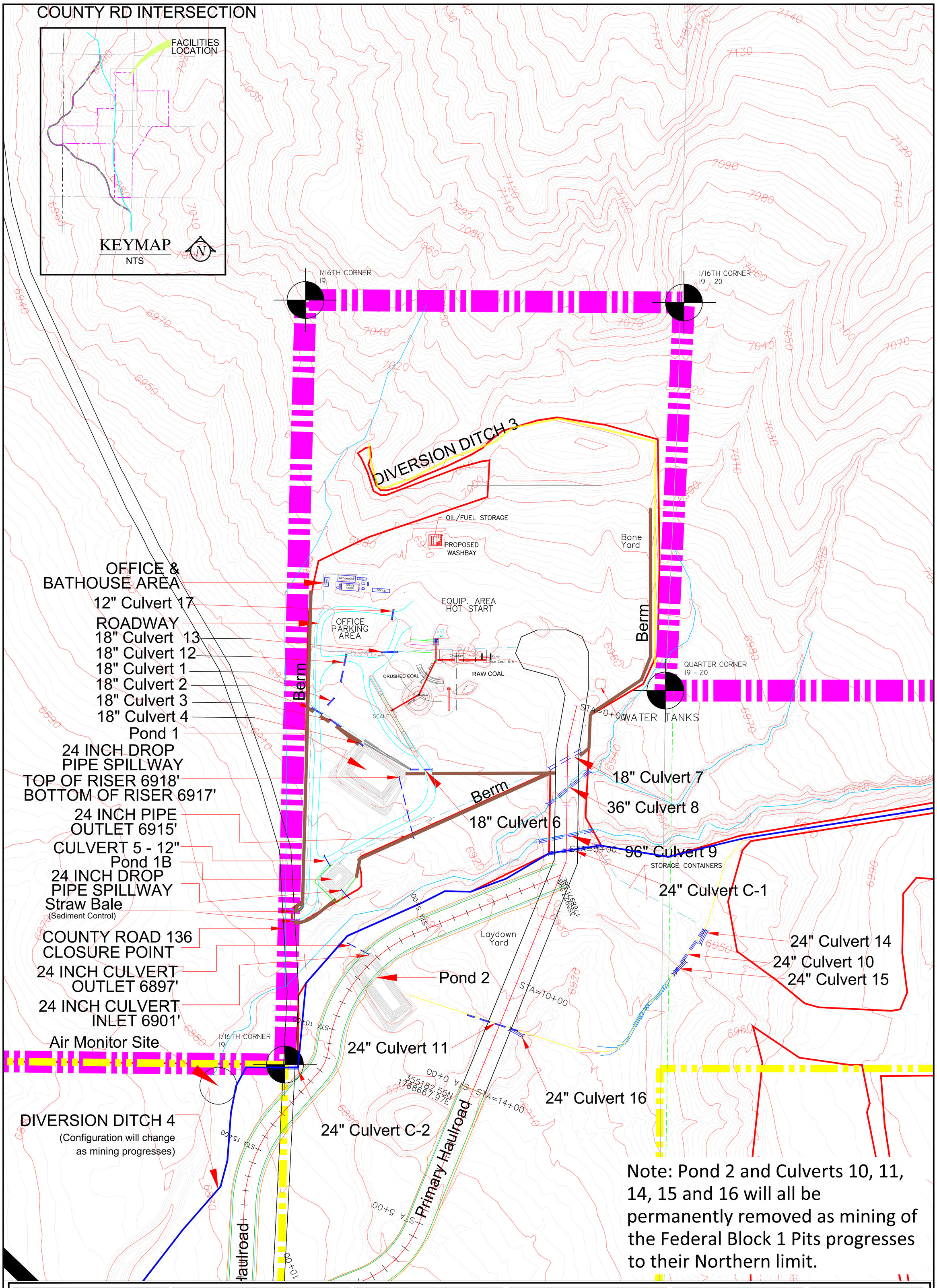

Note: Pond 2 and Culverts 10, 11, 14, 15 and 16 will all be permanently removed as mining of the Federal Block 1 Pits progresses to their Northern limit.

LEGEND:
- PERMIT BOUNDARY
- PRIVATE COAL OWNERSHIP
- COAL RECOVERY LINE
- SECTION LINE
- DRAINAGE DITCH
- DIVERSION DITCHES

DRAWN BY: C. McCOURT G. Grossman	CHECKED BY: LWJ
DRAWING: 5-3A	DATE: 11/10/08
	SCALE: 1" = 150'
JOB NUMBER: 1400	SHEET

REVISIONS

DATE:	BY:
6/13/11	KN/JKJR
09/28/15	KN
6/7/17	AC
8/7/18	AC
1/30/20	AC

FACILITIES & STRUCTURES

CULVERTS

COAL HOLLOW PROJECT
ALTON, UTAH

DRAWING: 5-3A

PROFESSIONAL ENGINEER 10230818 ANDREW R. CHRISTENSEN STATE OF UTAH

Alton Coal Development
Coal Hollow Project
463 North 100 West, Suite 1
Cedar City, Utah 84720
Phone (435) 867-5331
Fax (435) 867-1192

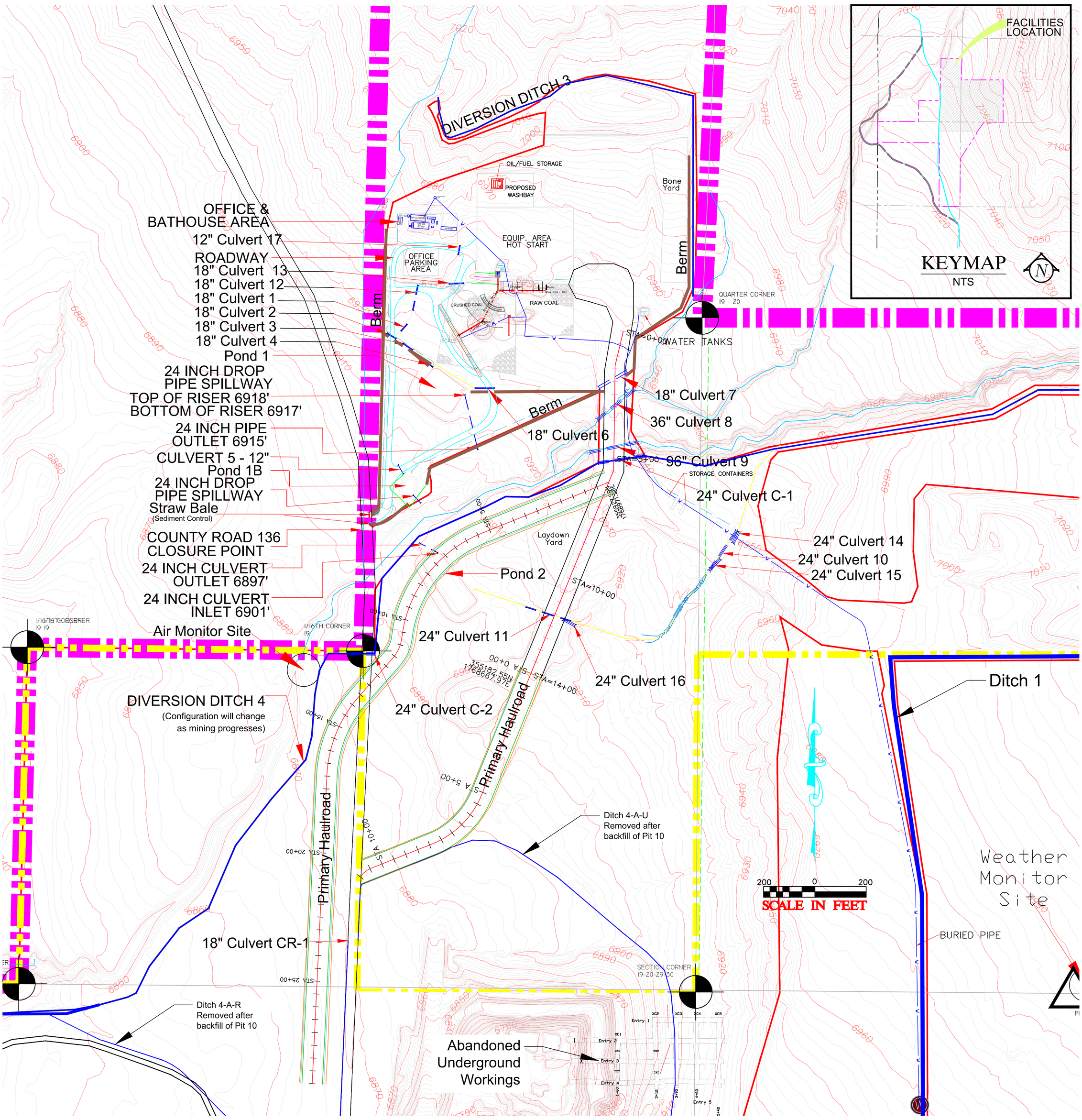

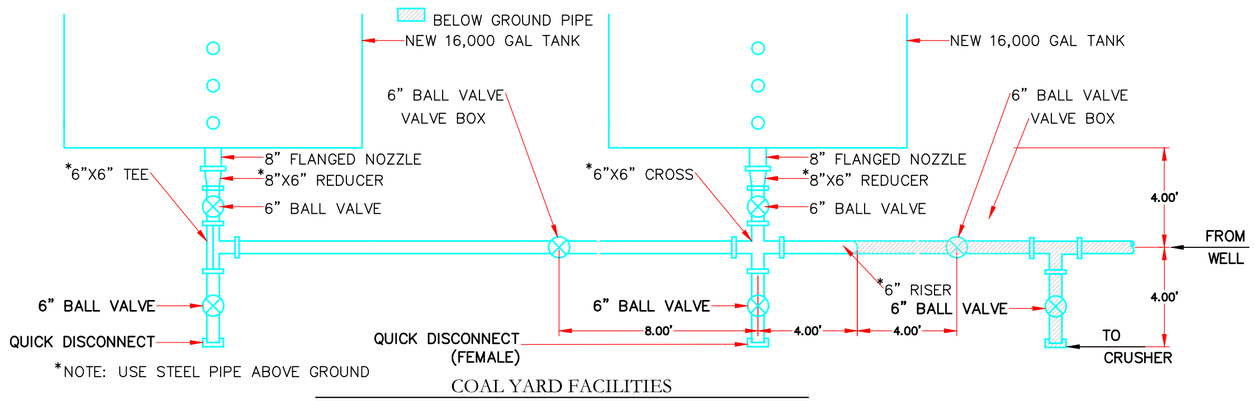

COAL YARD FACILITIES

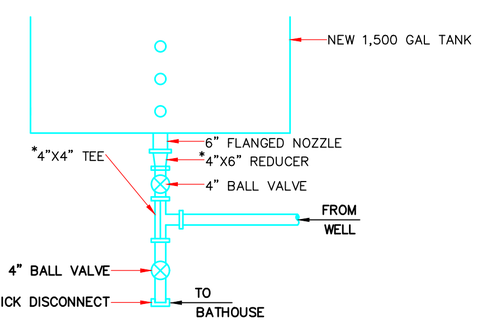

BATHOUSE FRESHWATER TANK

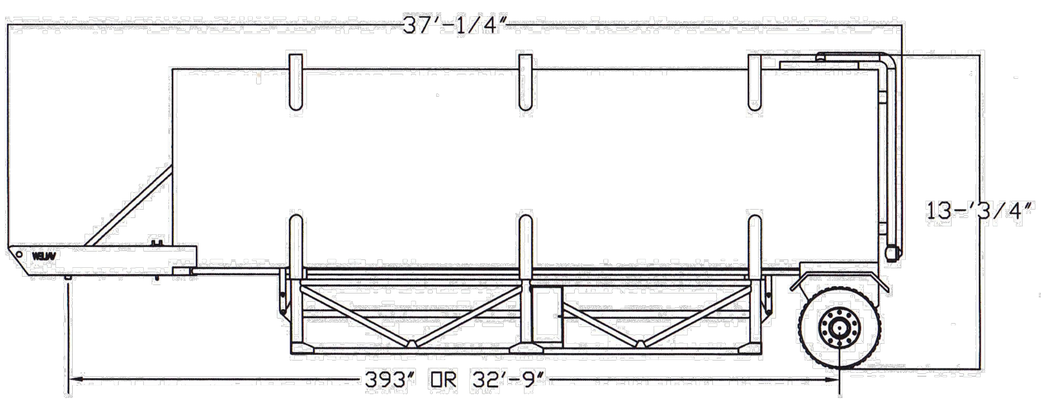

16,000 GALLON STEEL TANK DETAIL

NOT TO SCALE

SPECIFICATIONS

1. GRUNDFOS 60SQF-3 SUBMERSIBLE PUMP 50 GPM
2. 10-2 W/GRN. SUBMERSIBLE PUMP CABLE
3. CABLE CLIPS
4. STRAINING WIRE
5. WIRE CLAMP
6. TRACKING MOUNT: UTRF-168HD TRACKER (12 MODULES)
10. DIESEL- OR PETROL-DRIVEN PORTABLE GENERATOR
13. I/O GENERATOR CONTROLLER

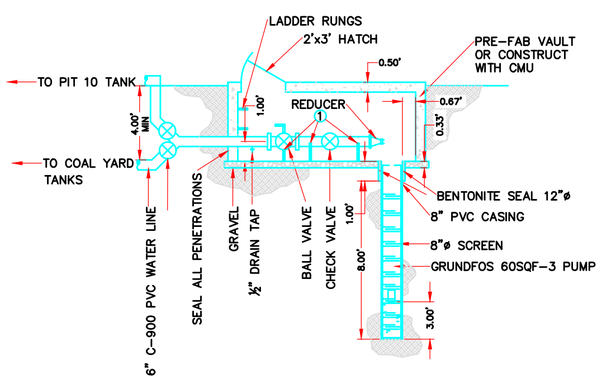

GROUND WATER PUMP DETAIL

LEGEND:

- PROJECT AREA
- PRIVATE COAL OWNERSHIP
- SECTION LINE
- 6" PVC C-900 WATER LINE
- 4050 / 4049 EXIST. CONTOURS
- 2019 DISTURBANCE EXTENTS
- GROUNDWATER PUMP SYSTEM (SEE DETAIL ABOVE). 5 GPM WITH 60 FT OF HEAD.
- 12.5'(DIA) X 17.5'(L) 16,000 GAL WATER TANK MOUNTED ON SKIDS X 2 (SEE DETAIL ABOVE).
- WATER LINE VALVE

DRAWN BY: G. GROSSMAN	CHECKED BY: CRM/WES
DRAWING: 5-8C	DATE: 11/10/08
	SCALE: 1" = 200'
JOB NUMBER: 1400	SHEET

REVISIONS

DATE:	BY:
5/8/2015	ARC
9/28/2015	KN
1/30/2020	ARC

FACILITIES & STRUCTURES

WATER PLAN

COAL HOLLOW PROJECT
ALTON, UTAH

DRAWING: 5-8C

PROFESSIONAL ENGINEER 10230818 ANDREW R. CHRISTENSEN STATE OF UTAH

Alton Coal Development
Coal Hollow Project
463 North 100 West, Suite 1
Cedar City, Utah 84720
Phone (435) 867-5331
Fax (435) 867-1192