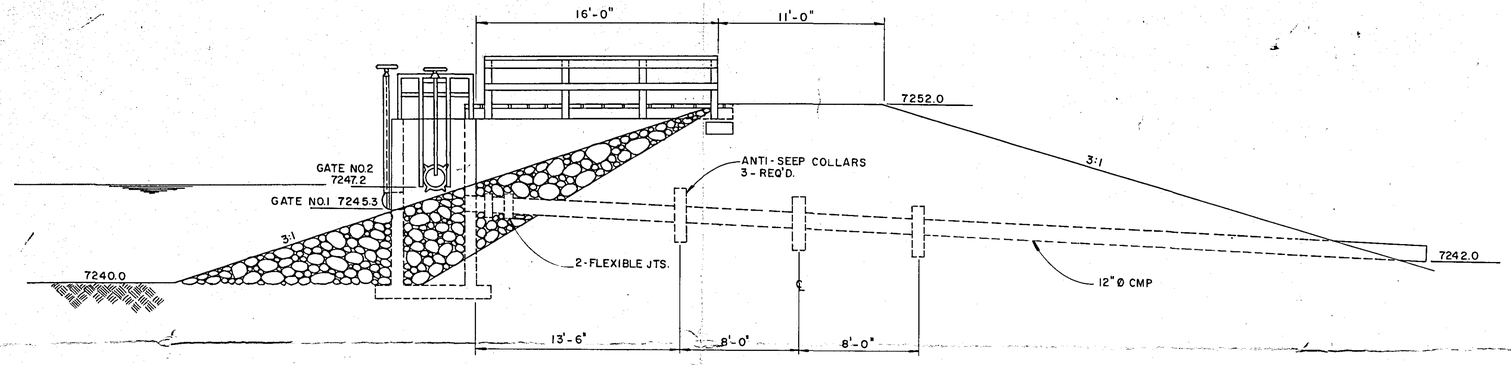

OUTLET SECTION
1" = 5'-0"

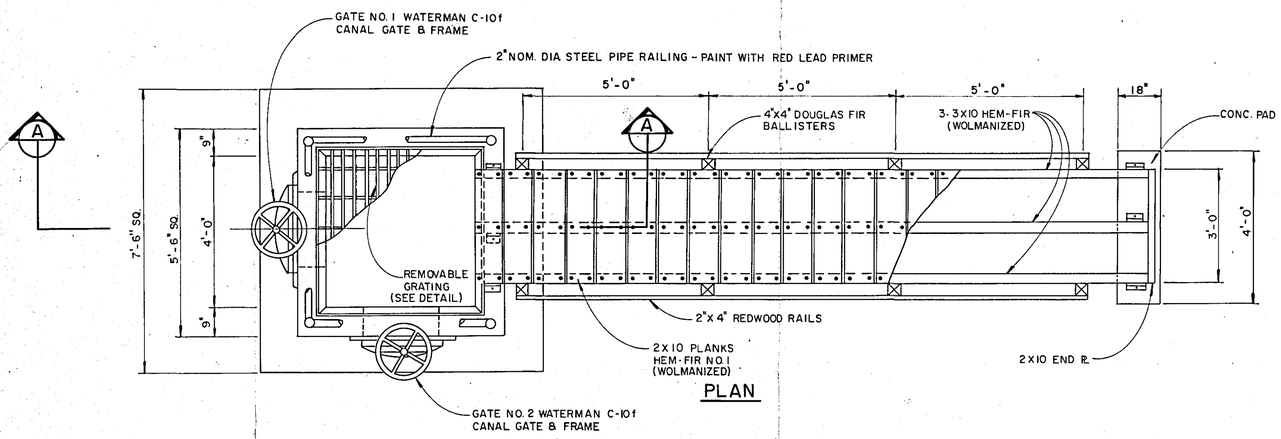

PLAN

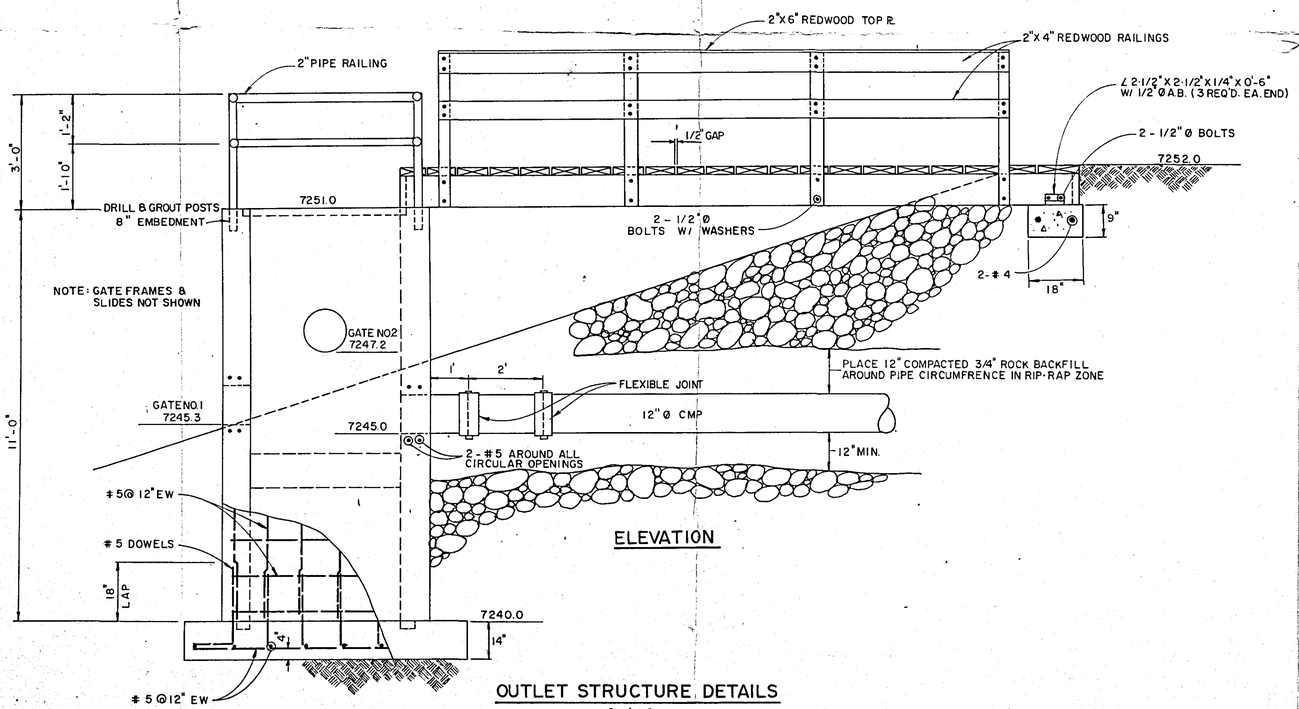

ELEVATION

OUTLET STRUCTURE DETAILS
1/2" = 1'-0"

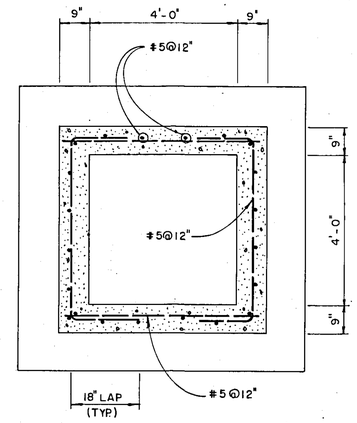

TYPICAL TOWER REINFORCING PLAN

B SECTION
1/2" = 1'-0"

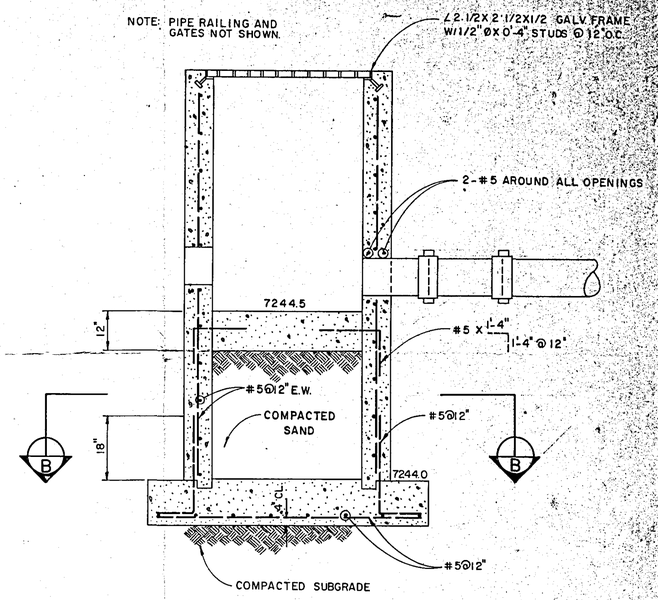

A TOWER SECTION
1/2" = 1'-0"

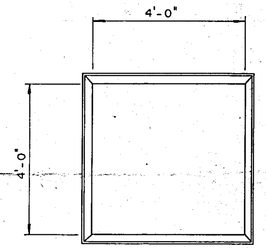

GALVANIZED GRATE FRAME (136 LB.)

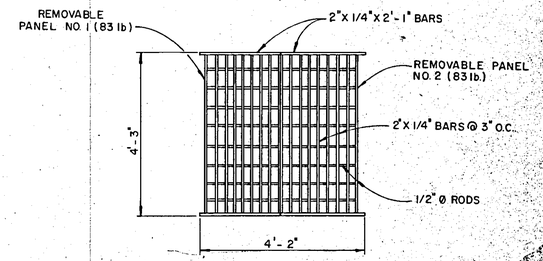

REMOVABLE GALVANIZED GRATING

GENERAL NOTES

1. CONC. SHALL HAVE A 28 COMPRESSIVE STRENGTH OF 3000 P.S.I.
2. REINF. STEEL SHALL BE DEFORMED BILLET STEEL CONFORMING TO ASTM A615, GRADE 60.
3. CEMENT SHALL BE TYPE II, SULPHATE RESISTANT.

EXHIBIT 9-5

SOUTHERN UTAH FUEL COMPANY

POND OUTLET WORKS

scale: AS SHOWN
drawn M. HIGGINS
checked DAF
approved

merrick and company
engineers and architects
p.o. box 4200
10855 east bethany drive · denver, colorado 80222
job no. 197-2904 date 9-17-79 sh. 6 of 18