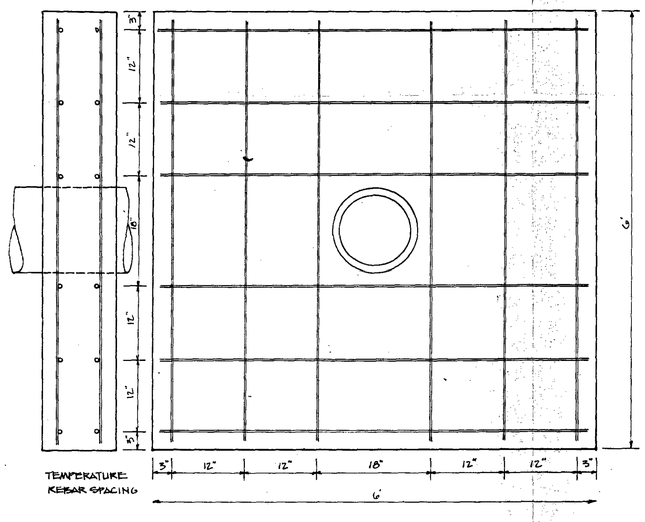

12" PIPE ANTI SEEP COLLAR

SCALE 1"=1'

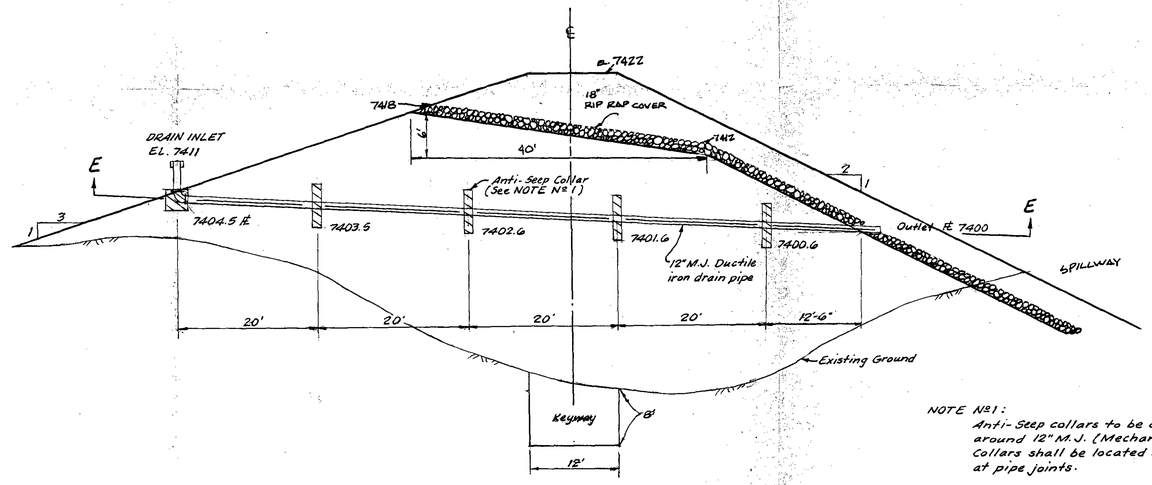

NOTE Nº 1:
Anti-Seep collars to be cast-in-place around 12" M.J. (Mechanical Joint) Collars shall be located and centered at pipe joints.

SECTION E-E

Scale: 1"=10'

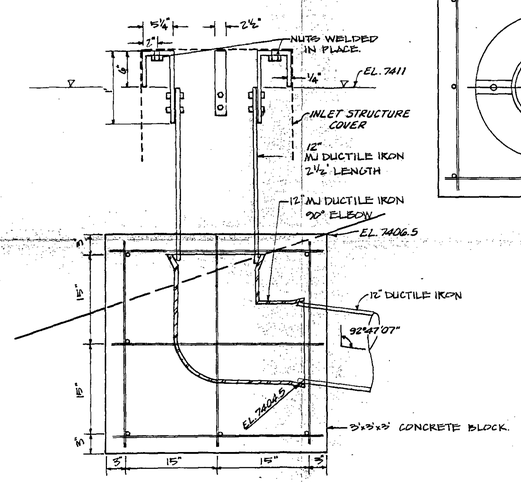

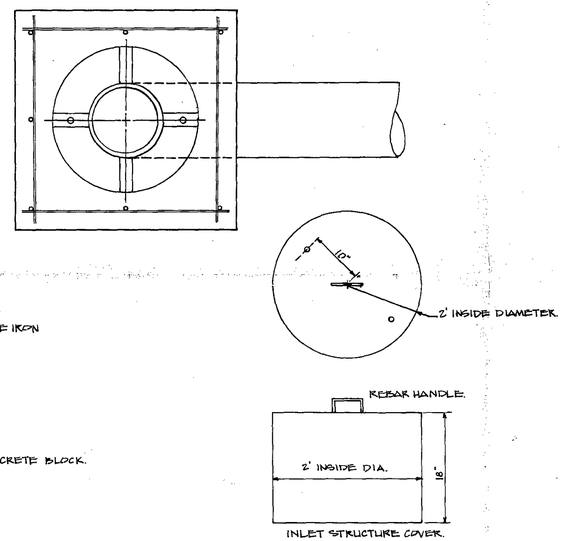

DRAIN INLET STRUCTURE & OIL SKIMMER

SCALE: 1"=1'

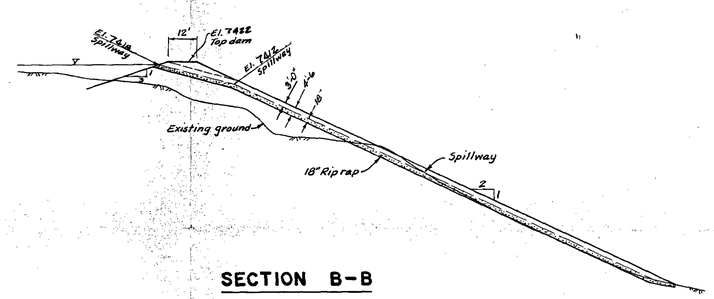

SECTION B-B

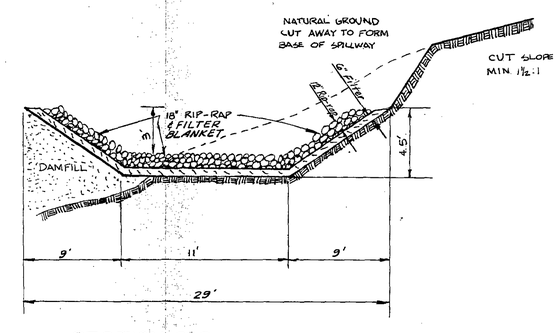

SECTION D-D

1"=5"

REVISIONS 1. 2. 3. 4. 5. 6.	PROJECT NO. 600007.02	DESIGNED M.G.C.	
	DATE MAY 15, 1980	DRAWN W.C.J.	
	SCALE AS SHOWN	APPROVED	

VALLEY ENGINEERING, INC.
CIVIL AND ENVIRONMENTAL ENGINEERING
LAND PLANNING AND SITE DESIGN
LAND SURVEYING
LOGAN, UTAH RICHFIELD, UTAH VERNAL, UTAH

SOUTHERN UTAH FUEL CO.
SALINA, UTAH

PROPOSED SEDIMENTATION POND

SHEET 3 SHEETS

THESE PLANS AND SPECIFICATIONS ARE THE PROPERTY OF VALLEY ENGINEERING INC., 168 NORTH, 100 EAST, LOGAN, UTAH, 84321, AND SHALL NOT BE COPIED OR REPRODUCED WITHOUT THEIR WRITTEN PERMISSION