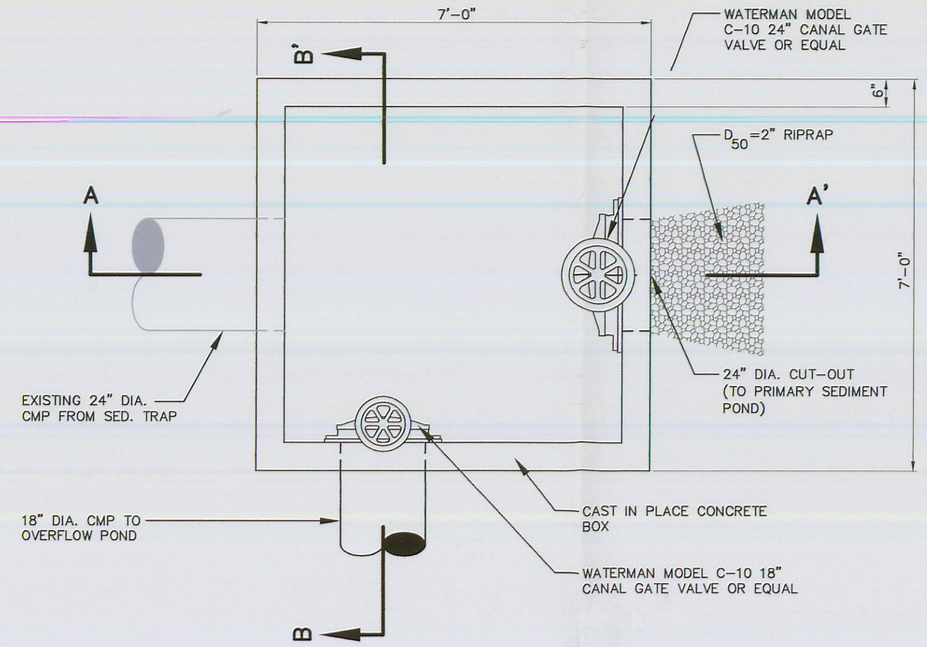


PLAN

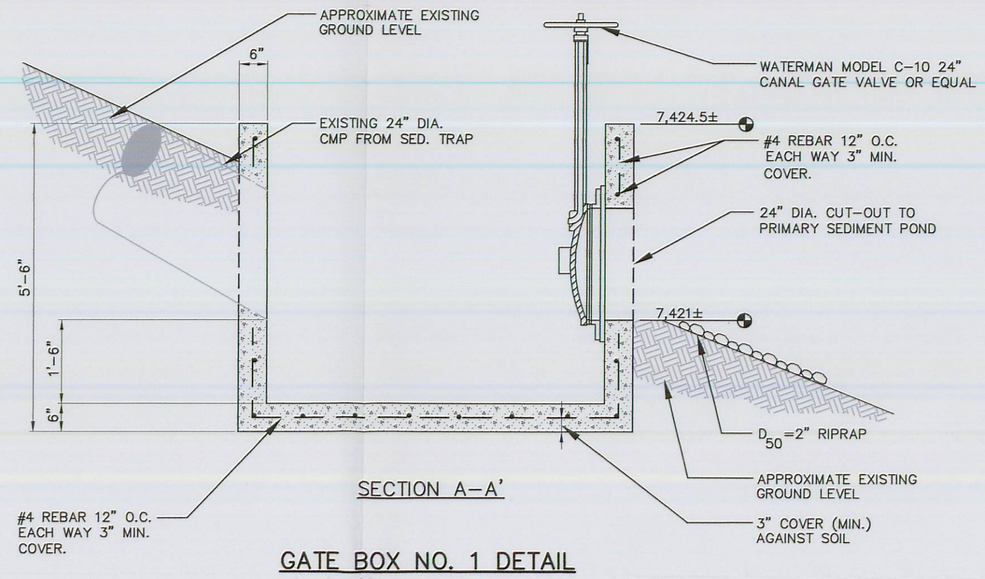


SECTION A–A'

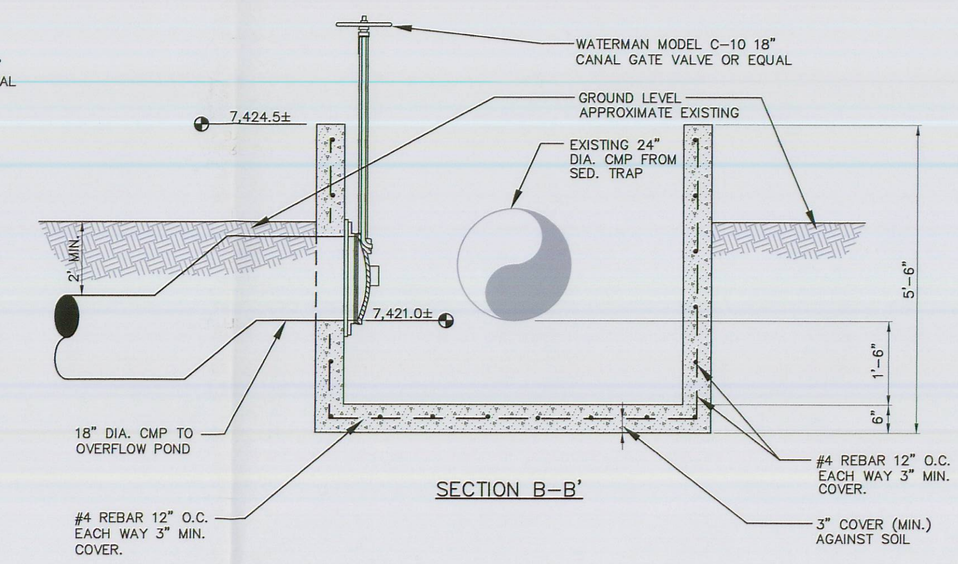


SECTION B–B'

## GATE BOX NO. 1 DETAIL

NO SCALE

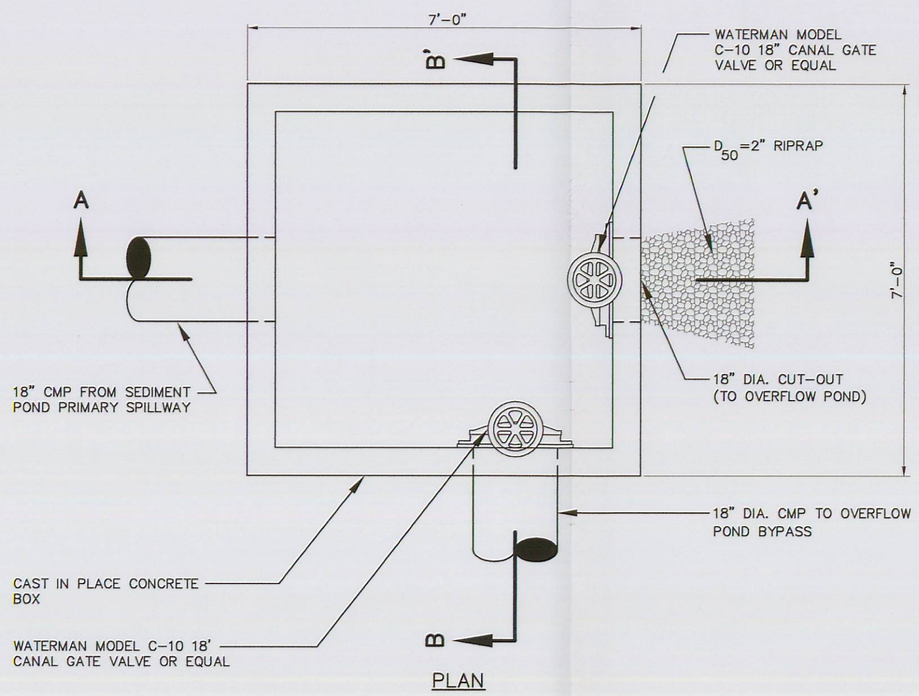


PLAN

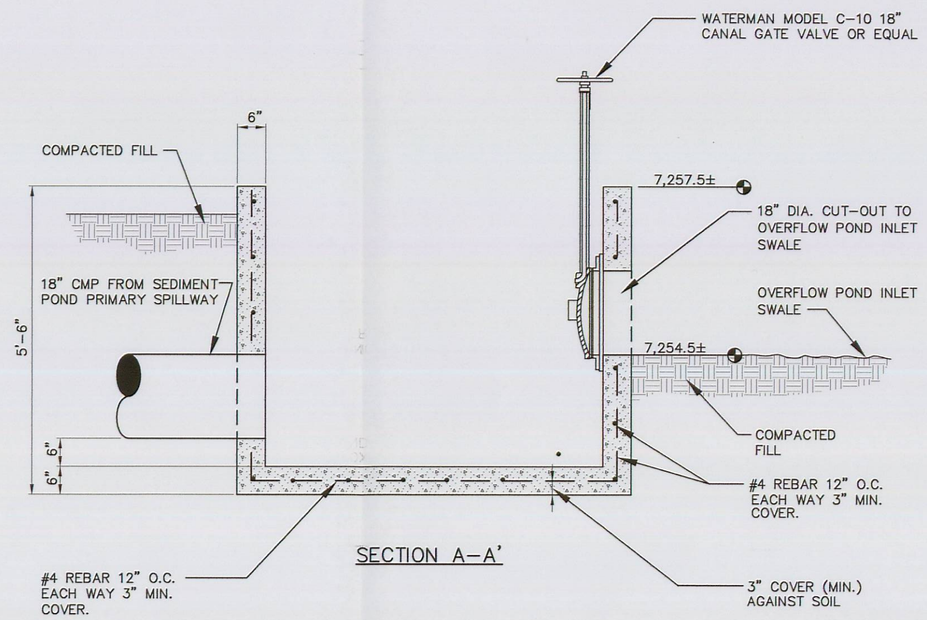


SECTION A–A'

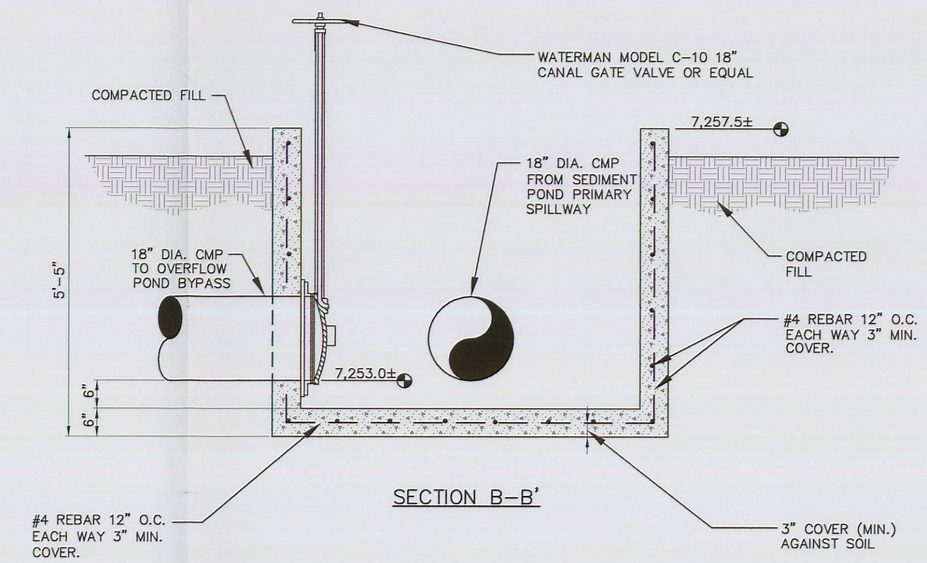


SECTION B–B'

## GATE BOX NO. 2 DETAIL

NO SCALE

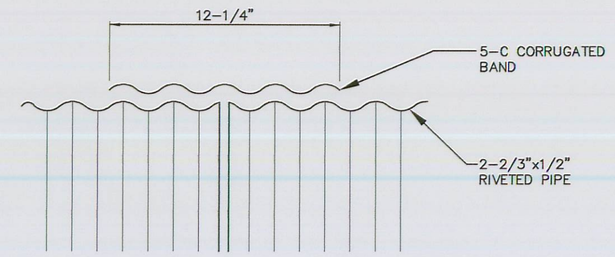


SECTION

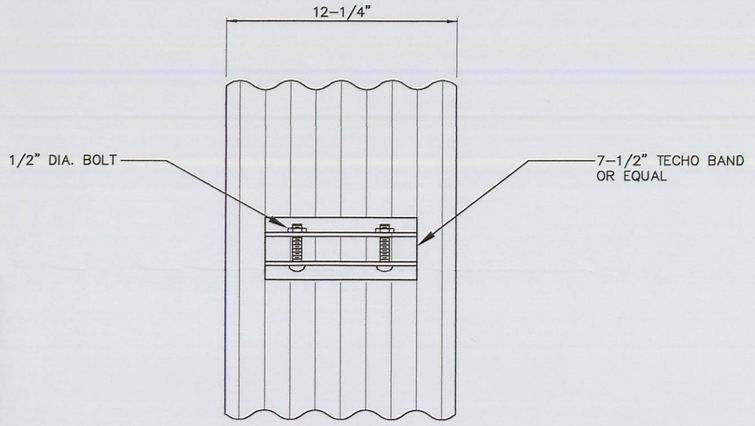


CONNECTION

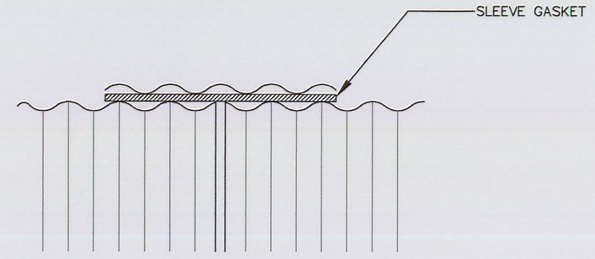


SECTION

ANCHOR NOTE:

1. BANDS ARE NORMALLY FURNISHED AS FOLLOWS:
   12" THRU 48" 1-PIECE
   54" THRU 96" 2-PIECE
2. BAND FASTENERS ARE ATTACHED WITH SPOT WELD RIVETS OR HAND WELDS.
3. DIMENSIONS ARE SUBJECT TO MANUFACTURING TOLERANCES.

## CORRUGATED BAND DETAIL

NO SCALE

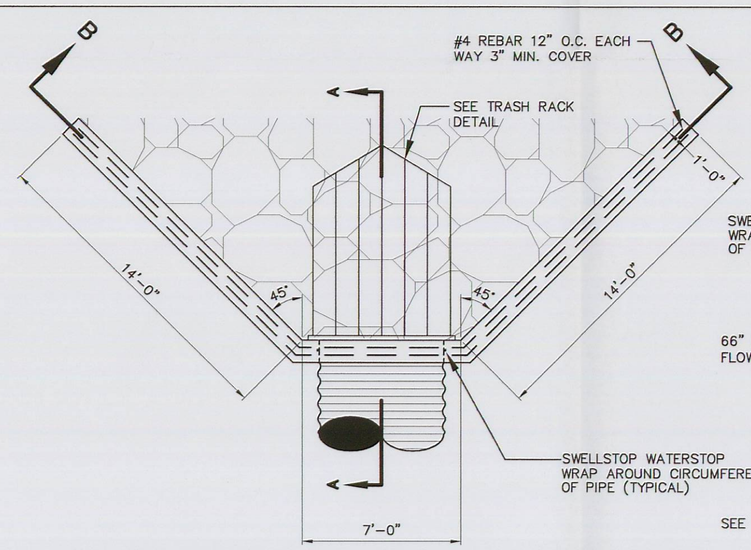


PLAN

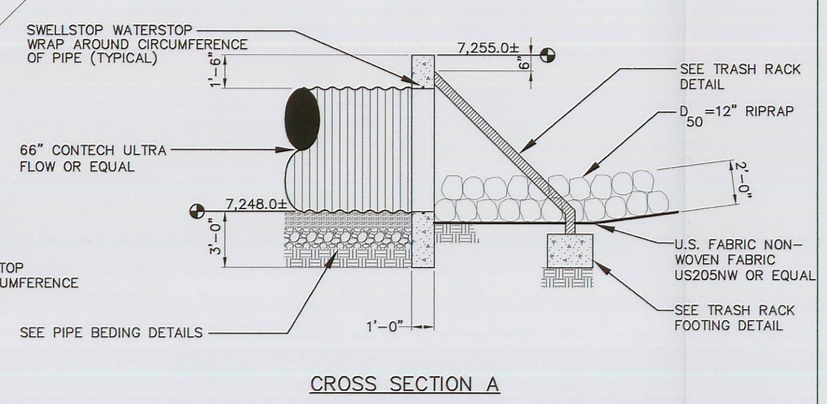


CROSS SECTION A

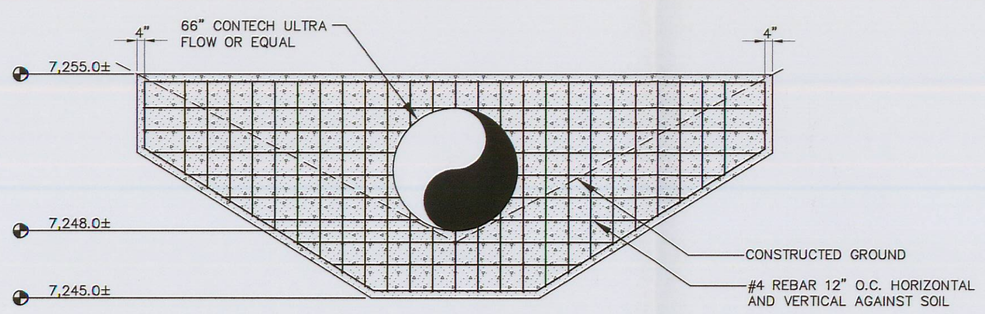


CROSS SECTION B

## OVERFLOW POND BYPASS INLET DETAIL

NO SCALE

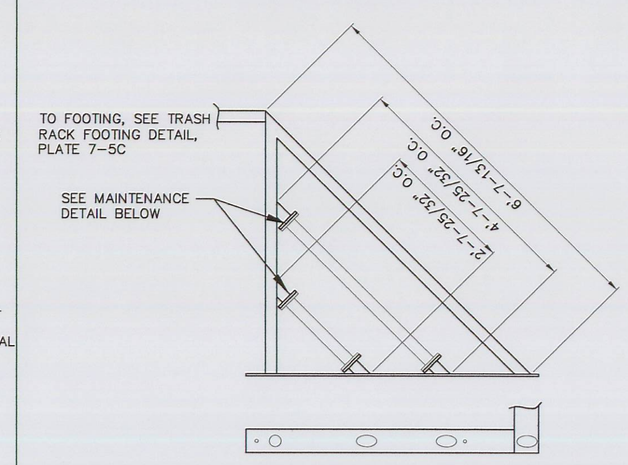


WEST SIDE

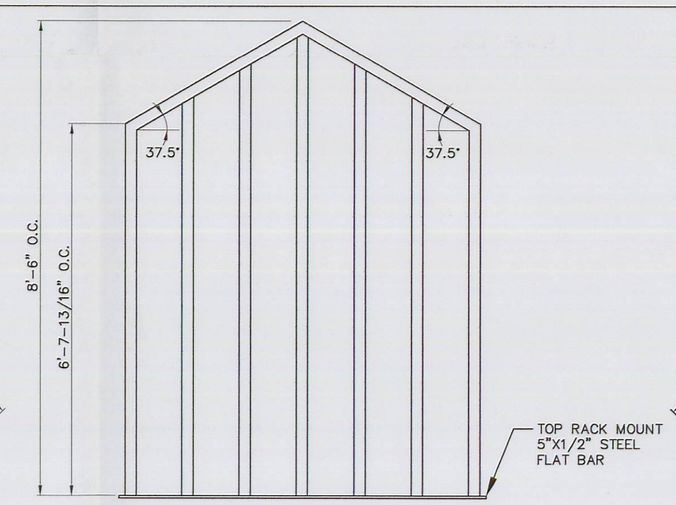


TOP

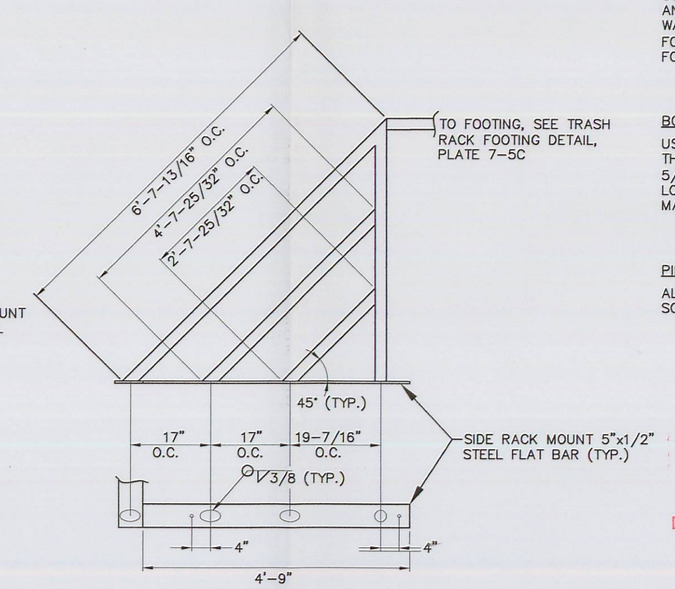


EAST SIDE

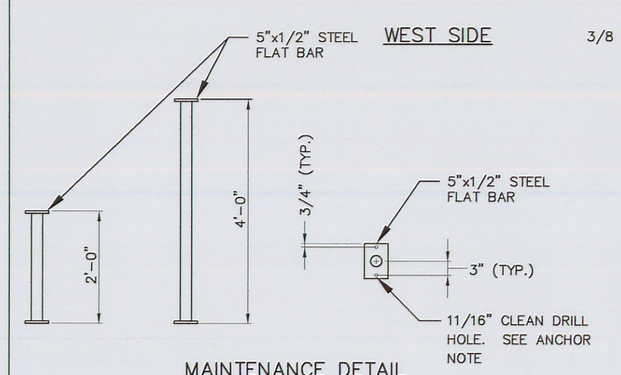


MAINTENANCE DETAIL

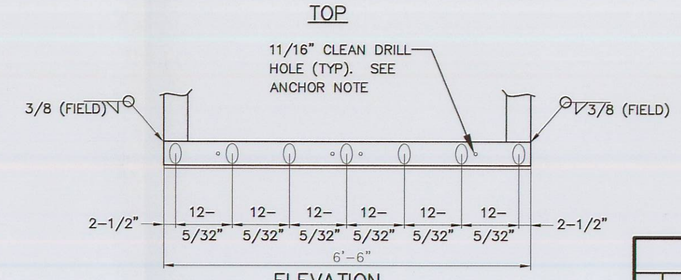


ELEVATION

## TRASH RACK DETAIL

NO SCALE

ANCHOR NOTE:

ANCHOR TRASH RACK TO OVERFLOW POND BYPASS CONCRETE INLET WITH 5/8"x8" HILTI THREADED ROD OR EQUAL. IMBED THREAD ROD 6" IN CONCRETE. USE HILTI HIT ADHESIVE OR EQUAL TO ANCHOR THREAD ROD. USE ZINC PLATED FLAT WASHER, LOCK WASHER AND GRADE 5 HEX NUT. FOLLOW ALL MANUFACTURER'S RECOMMENDATIONS FOR INSTALLATION.

BOLT NOTE:

USE 5/8"-11x1-1/2" HEX HEAD COURSE THREADED, ZINC PLATED, GRADE 5 BOLTS WITH 5/8"-11 GRADE 5, ZINC PLATED FLAT WASHER, LOCK WASHER AND HEX HEAD NUT TO FASTEN MAINTENANCE ENTERANCE.

PIPE NOTE:

ALL STEEL NOT CALLED OUT TO BE 2" DIA. SCHEDULE 80 STEEL PIPE.

RECEIVED
JUN 24 2009
DIV. OF OIL, GAS & MINING

REGISTERED PROFESSIONAL ENGINEER
No. 168246
RICHARD B. WHITE
STATE OF UTAH

| REVISIONS | | | | |
|---|---|---|---|---|
| NO. | DATE | REQ. BY | DWG. BY | REMARKS |
| | | | | |
| | | | | |
| | | | | |
| | | | | |
| | | | | |
| | | | | |


Canyon Fuel Company, LLC
SUFCO Mine
397 South 800 West – Salina, UT 84654
(435) 286-4880 Phone
(435) 286-4499 Fax


# OVERFLOW POND DETAILS

| SCALE: | DATE: | DRAWN BY: | ENGINEER: | PLATE NO. |
|---|---|---|---|---|
| AS SHOWN | 06/17/09 | SWF/TAJ | TAJ | 7-5B |
| CHECKED BY: BRW | FILE NAME: G:\UC1191\02-Sed Pond design\Final Design\PLATE 7-5B | | | |