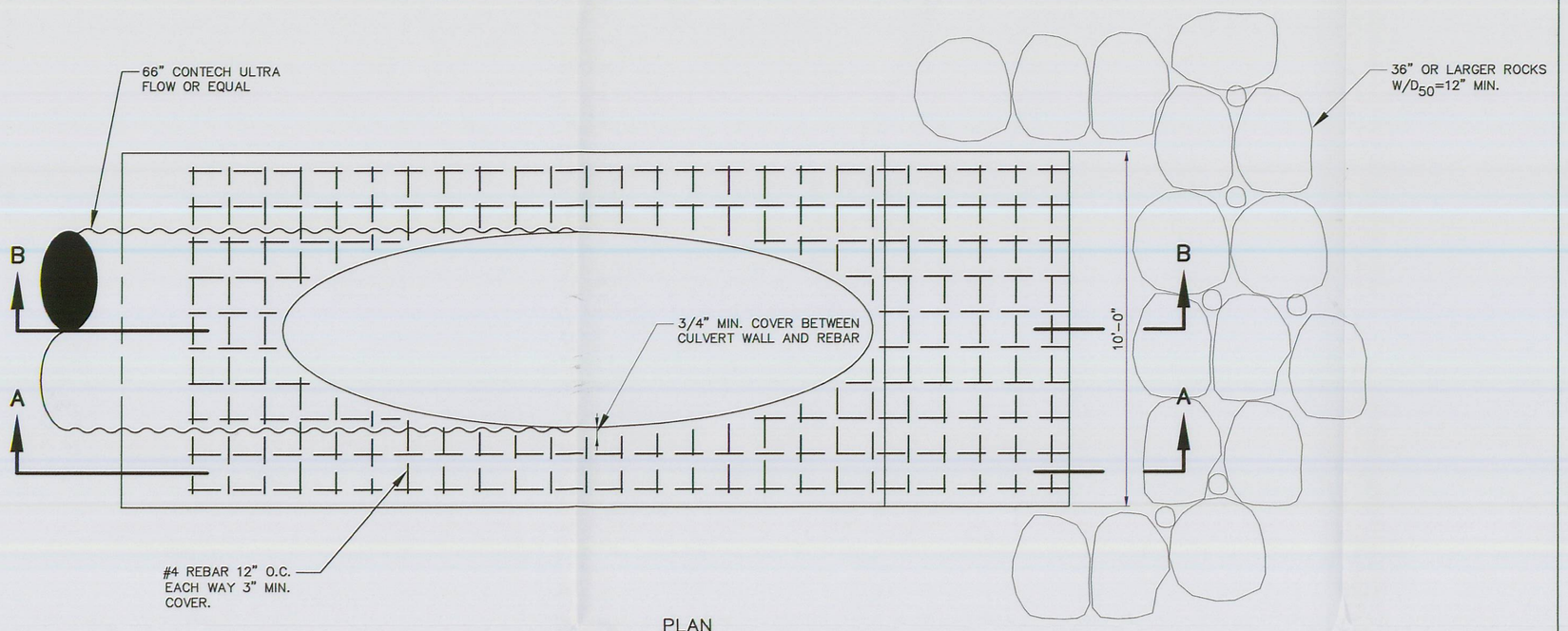

PLAN

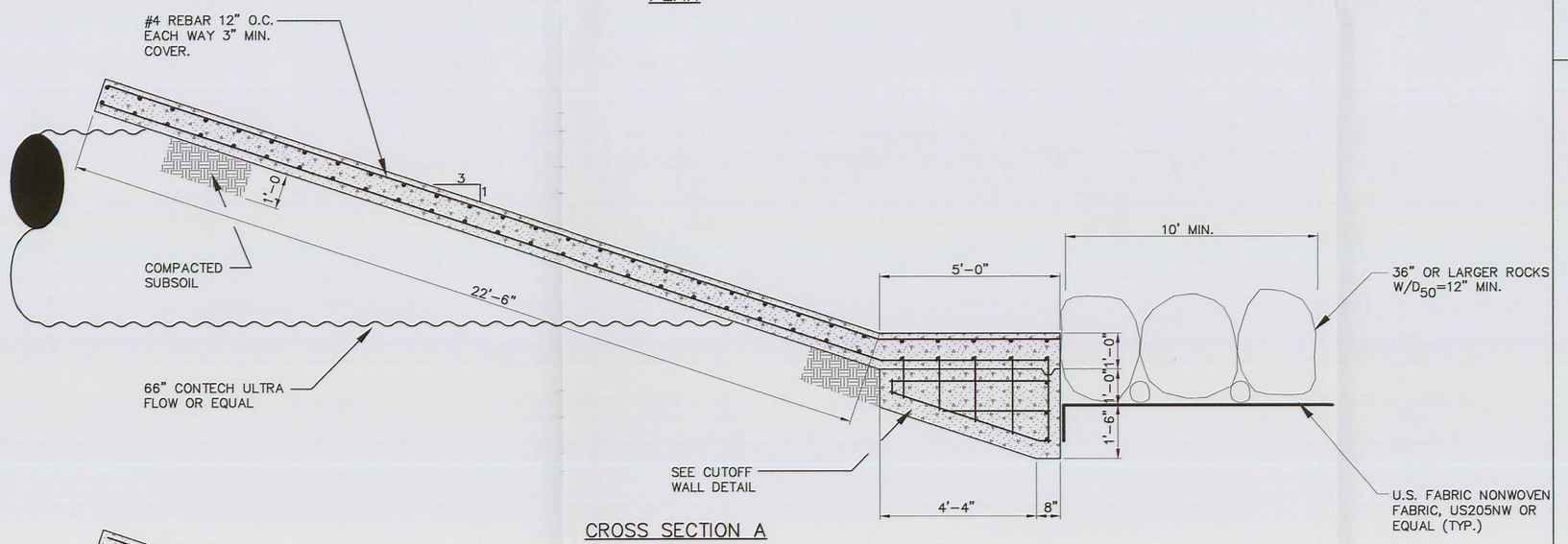

CROSS SECTION A

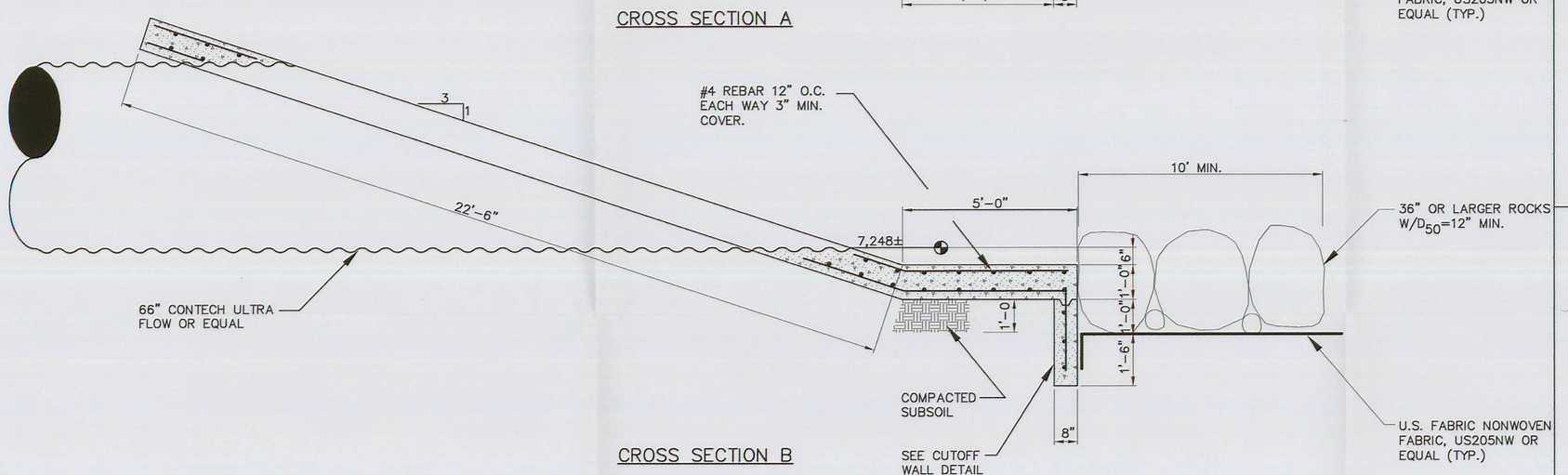

CROSS SECTION B

OVERFLOW POND BYPASS OUTLET DETAIL

NO SCALE

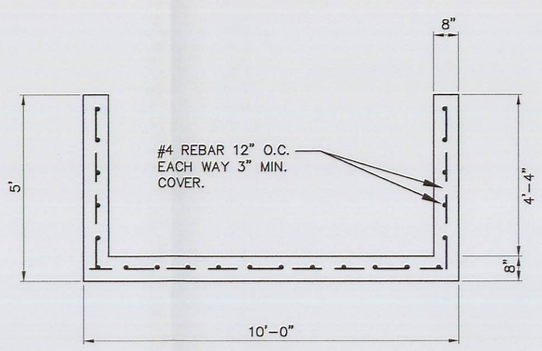

PLAN

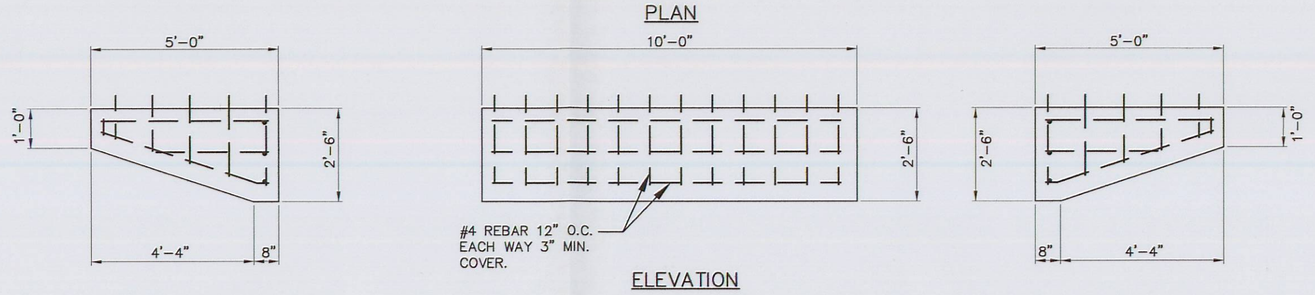

ELEVATION

CUTOFF WALL DETAIL

SCALE: 1"=3'-0"

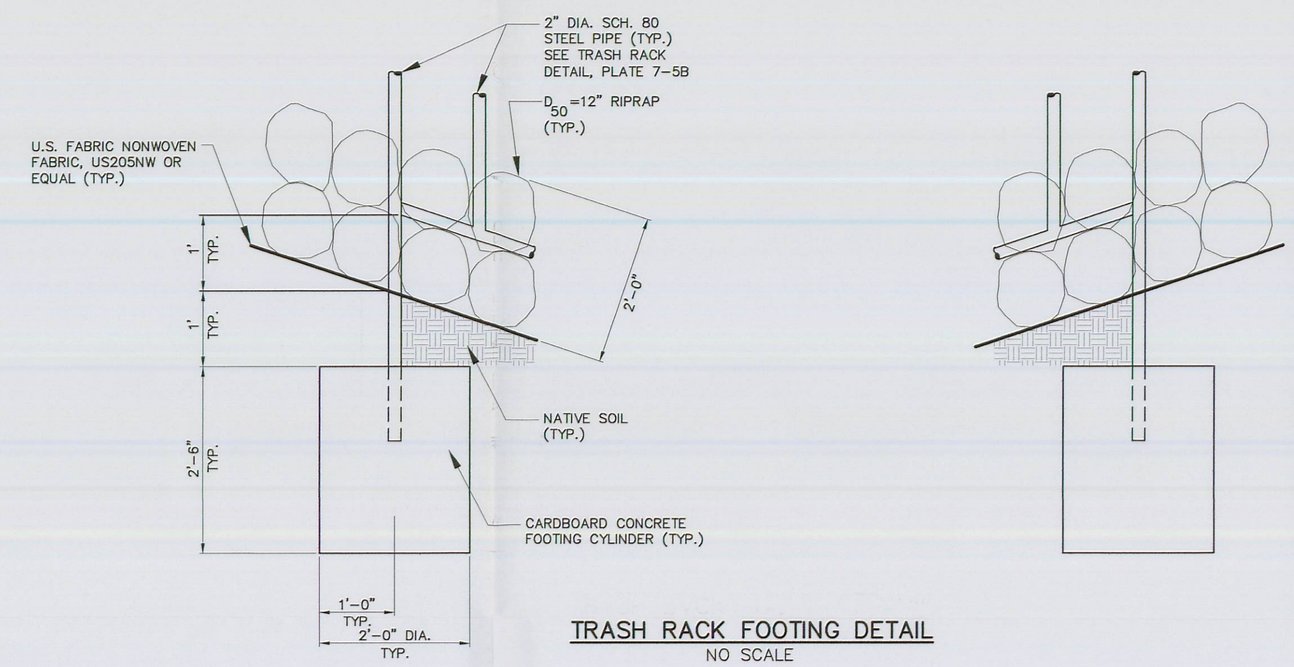

TRASH RACK FOOTING DETAIL

NO SCALE

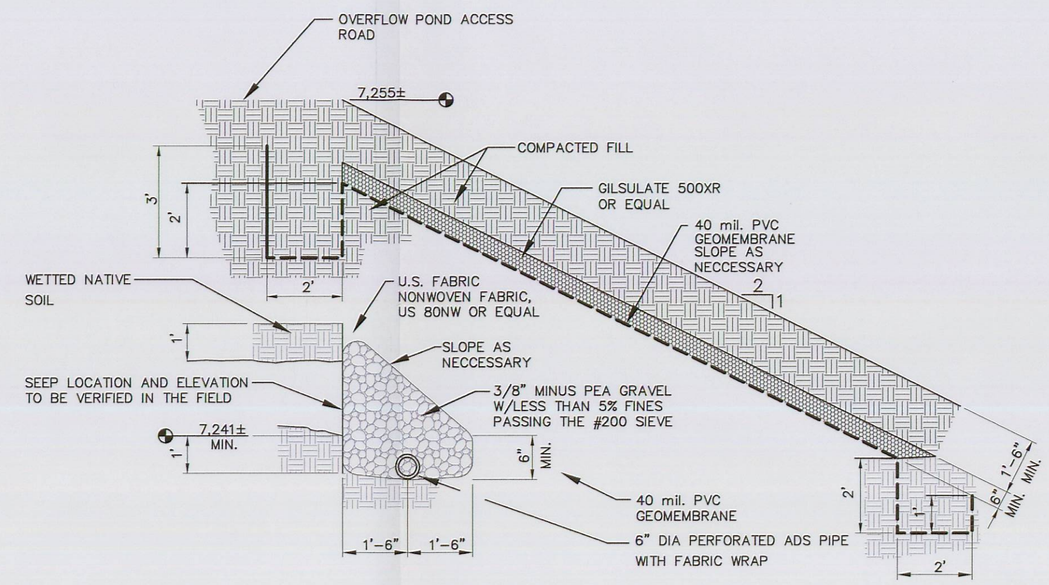

SEEP DIVERSION DETAIL

NO SCALE

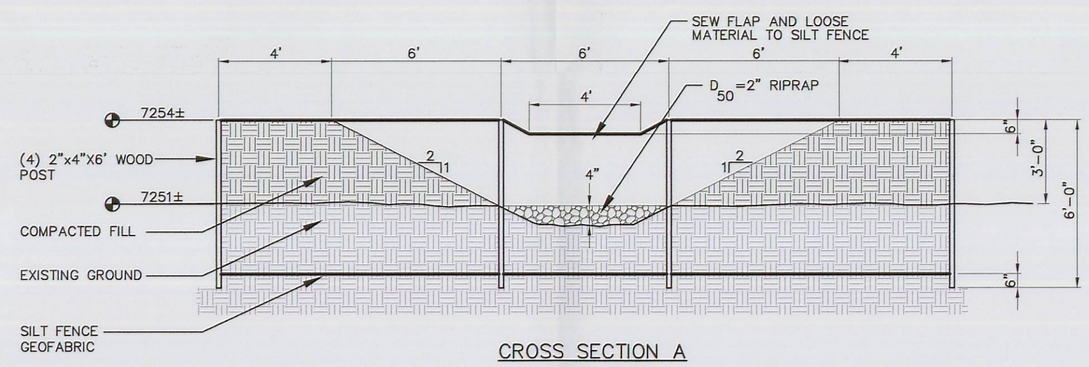

CROSS SECTION A

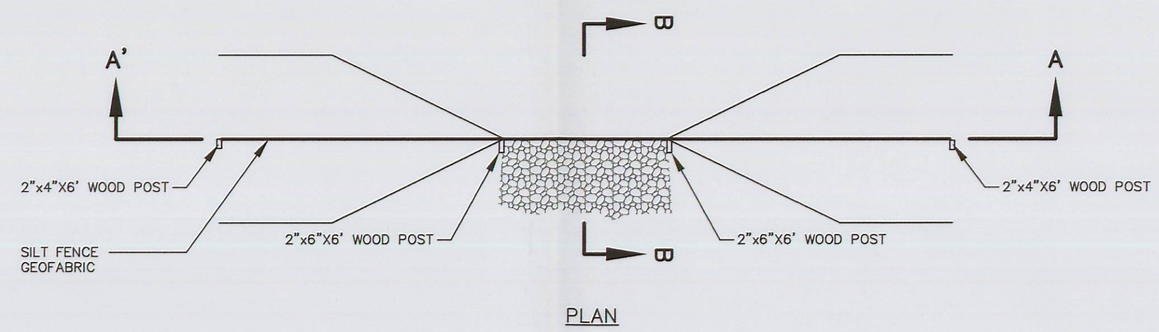

PLAN

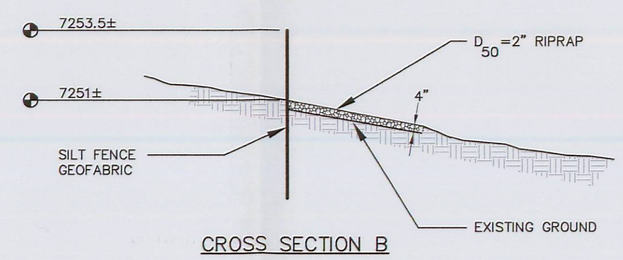

CROSS SECTION B

TOPSOIL STOCKPILE BERM SPILLWAY DETAIL

NO SCALE

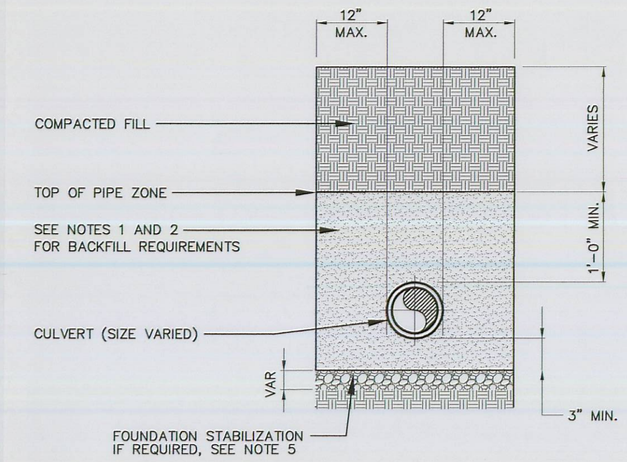

NOTES:

1. PLACE BACKFILL AT OPTIMUM MOISTURE IN HORIZONTAL 8" DEEP LOOSE LAYERS. COMPACT TO 95% (ASTM-D698) MAXIMUM DRY DENSITY.
2. NATURAL RIVER OR BANK SAND FREE OF DEBRIS, GRADED AS FOLLOWS:

SIEVE SIZE	% PASSING
3/4"	100
# 200	2-10 MAX

3. MAXIMUM WIDTH OF TRENCH INCLUDING ANY NECESSARY SHEATHING IS PIPE O.D. + 24".
4. O.D. MEANS OUTSIDE DIAMETER OF PIPE BARREL.
5. FOR FOUNDATION STABILIZATION USE "SEWER ROCK" CONFORMING TO THE FOLLOWING GRADATION.

SIEVE SIZE	% PASSING	IDEAL GRADATION (TOLERANCE)
2"	100	±5
1"	65	±5
1/2"	5	±1

PIPE BEDDING/TRENCHING IN NON-POND AREA DETAIL

NO SCALE

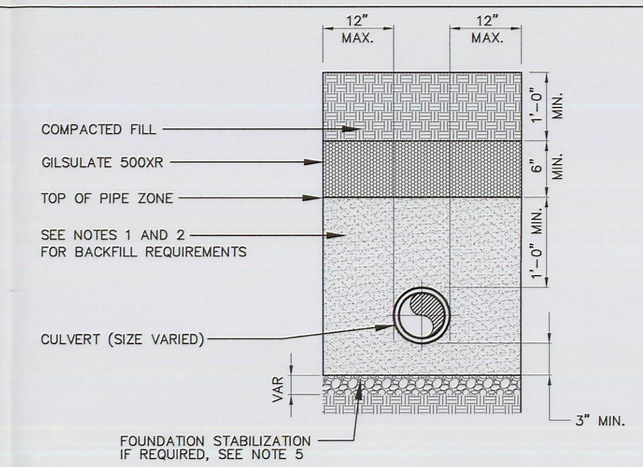

NOTES:

1. PLACE BACKFILL AT OPTIMUM MOISTURE IN HORIZONTAL 8" DEEP LOOSE LAYERS. COMPACT TO 95% (ASTM-D698) MAXIMUM DRY DENSITY.
2. NATURAL RIVER OR BANK SAND FREE OF DEBRIS, GRADED AS FOLLOWS:

SIEVE SIZE	% PASSING
3/4"	100
# 200	2-10 MAX

3. MAXIMUM WIDTH OF TRENCH INCLUDING ANY NECESSARY SHEATHING IS PIPE O.D. + 24".
4. O.D. MEANS OUTSIDE DIAMETER OF PIPE BARREL.
5. FOR FOUNDATION STABILIZATION USE "SEWER ROCK" CONFORMING TO THE FOLLOWING GRADATION.

SIEVE SIZE	% PASSING	IDEAL GRADATION (TOLERANCE)
2"	100	±5
1"	65	±5
1/2"	5	±1

RECEIVED
JUN 24 2009
DIV. OF OIL, GAS & MINING

PIPE BEDDING/TRENCHING IN POND AREA DETAIL

NO SCALE

File in:
☐ Confidential
☒ Shelf
☐ Expandable
Refer to Record No 0053 Date 6/23/09
In C0411005 2009 Underground
For additional information

REGISTERED PROFESSIONAL ENGINEER
No. 168246
RICHARD B. WHITE
Date 24 June 2009
STATE OF UTAH

REVISIONS				
NO.	DATE	REQ. BY	DWG. BY	REMARKS

Canyon Fuel Company, LLC
SUFCO Mine
397 South 800 West - Salina, UT 84654
(435) 286-4880 Phone
(435) 286-4499 Fax

OVERFLOW POND DETAILS

SCALE:	DATE:	DRAWN BY:	ENGINEER:	PLATE NO.
AS SHOWN	03/27/09	SWF/TAJ	TAJ	7-5C
CHECKED BY: BRW	FILE NAME: G:\UC1191\02-Sed Pond design\Final Design\PLATE 7-5C			