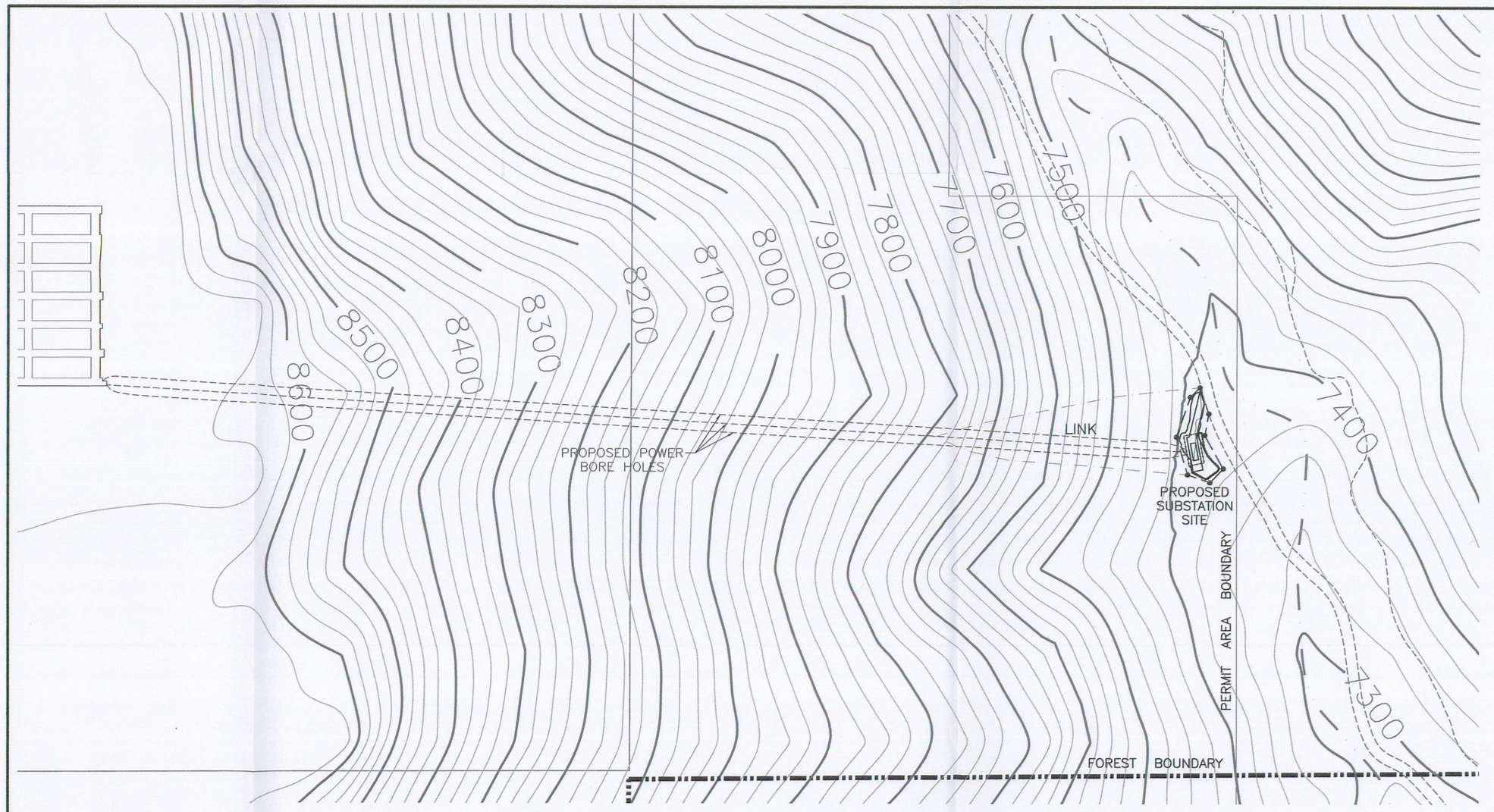

LINK CANYON SUBSTATION #1
PRE MINING TOPOGRAPHY
SCALE: 1" = 200'

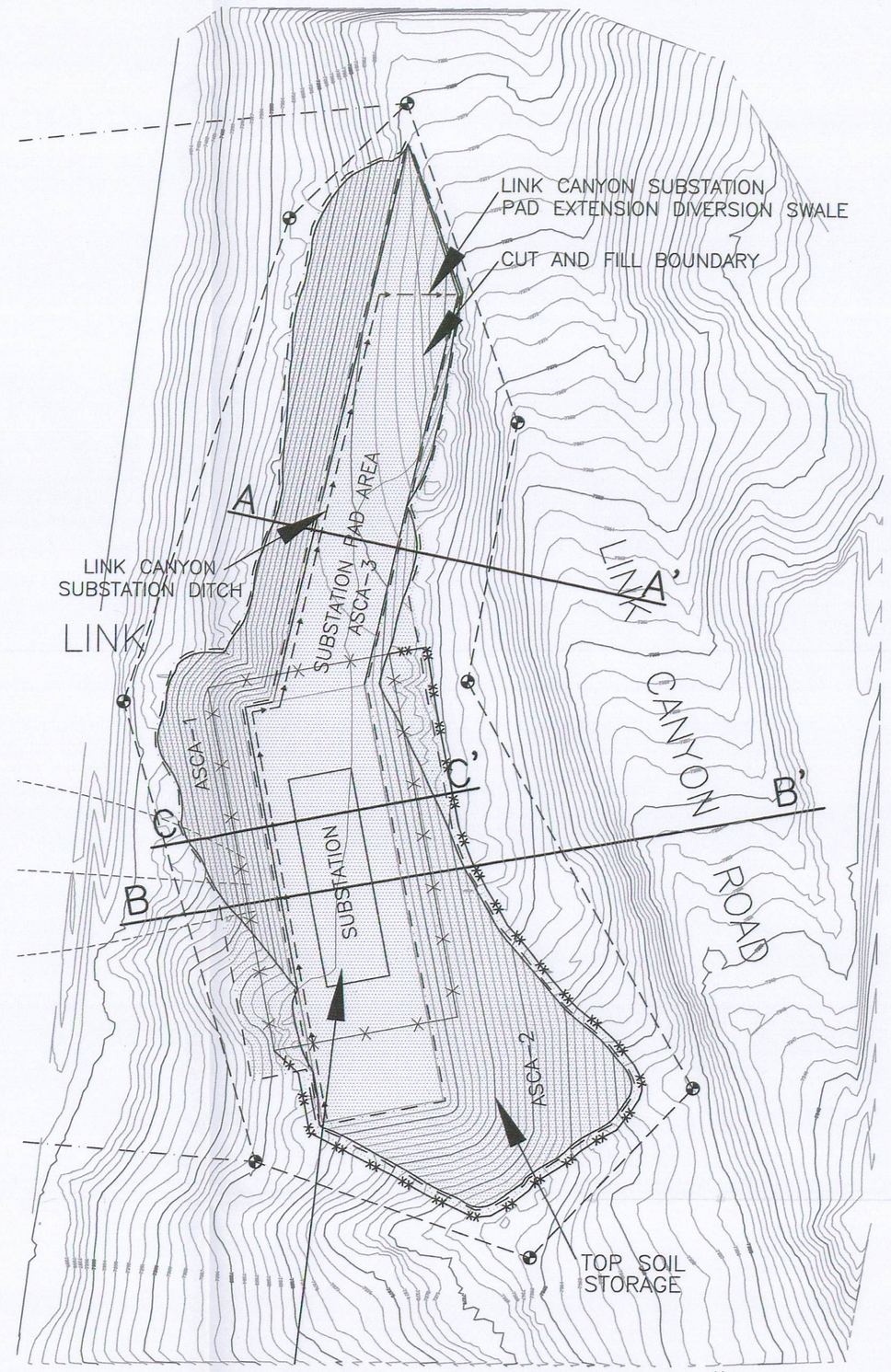

LINK CANYON SUBSTATION #1
DAB (0.28 ACRES)
ASCA (0.18 ACRES)

SUBSTATION PAD FACILITIES DETAIL
SCALE: 1" = 20'

LINK CANYON SUBSTATION #1
POST RECLAMATION
TOPOGRAPHY
SCALE: 1" = 20'

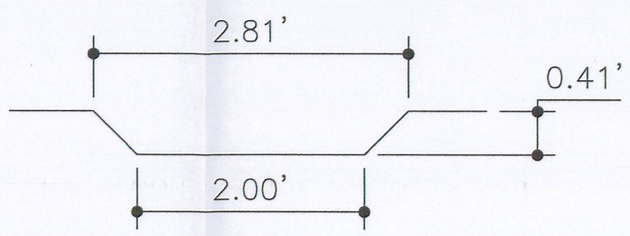

TYPICAL DITCH CROSS-SECTION

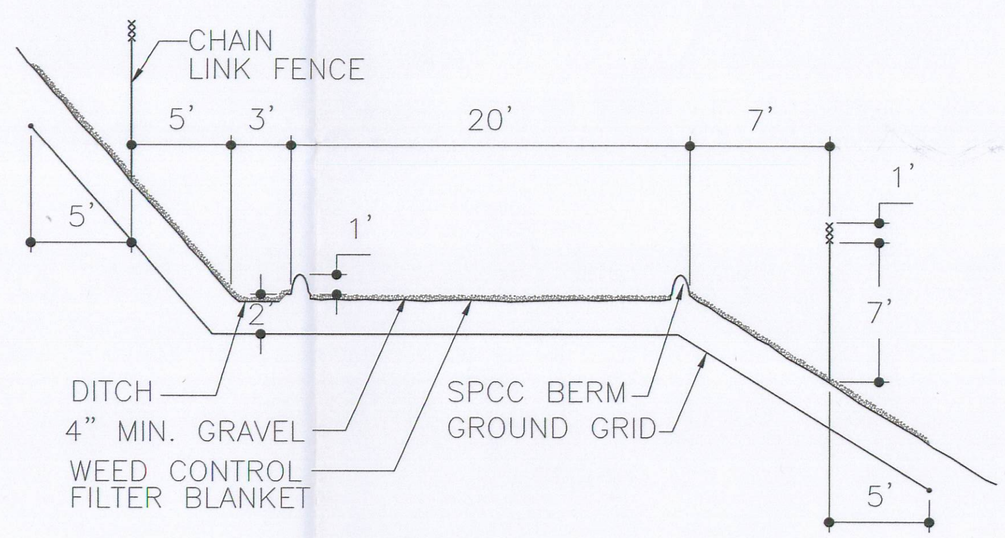

CROSS-SECTION C-C'
SCALE: NTS

VOLUMES:
CUT: 467 CUBIC YARDS
FILL: 455 CUBIC YARDS

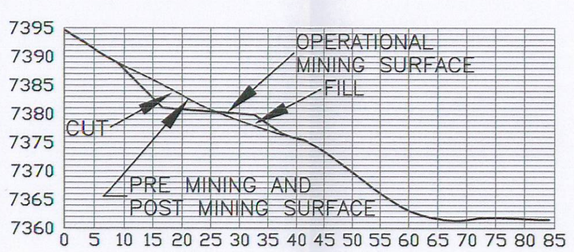

CROSS-SECTION A-A'

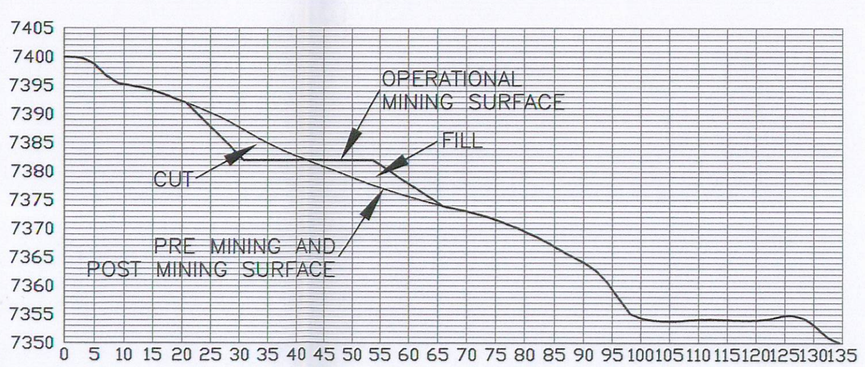

CROSS-SECTION B-B'

LEGEND

- EPHEMERAL STREAM
- OUTCROP
- LEASE BOUNDARY
- INTERIOR LEASE
- DISTURBED AREA BOUNDARY
- DISTURBED AREA BOUNDARY MARKER
- SUBSTATION CHAIN LINK FENCE
- ALTERNATE SEDIMENT CONTROL AREA (ASCA)
- WATERSHED BOUNDARY
- DIVERSION DITCH
- TOP SOIL CONTAINMENT BEAM AND/OR SILT FENCE
- TOP SOIL STOCKPILE FENCE

NOTE:
LINK CANYON SUBSTATION LOCATED IN SECTION 26, SW 1/4, T21S, R5E, SLB&M

REGISTERED PROFESSIONAL ENGINEER #334504-2202 JOHN D. BYARS STATE OF UTAH

I CERTIFY THE ITEMS SHOWN ON THIS DRAWING ARE ACCURATE TO THE BEST OF MY KNOWLEDGE

RECEIVED
JUN 03 2010

File in:
☐ Confidential
☐ Shelf
☒ Expandable
Date Filed: 06/03/2010 0410002
Re: In Coming

REVISIONS

NO.	DATE	REQ. BY	DWG. BY	REMARKS
1	APRIL '98	M.L.D.	S.K.S	
2	06/09/98	M.L.D	S.K.S.	
3	09/30/98	M.L.D.	S.K.S.	
4	11/17/98	M.L.D.	S.K.S.	
5	12/16/98	M.L.D.	S.K.S.	
6	05/24/10	M.L.D.	K.B.B.	

Canyon Fuel Company, LLC.
SUFCO Mine
597 South SR 24 – Salina, UT 84654
(435) 286-4880 Phone
(435) 286-4499 Fax

DETAIL OF LINK CANYON
SUBSTATION #1 SURFACE FACILITIES

SCALE:	DATE:	DRAWN BY:	ENGINEER:	SHEET NO.
1" = 200'	11/12/1997	S.K.S.	M.L.D.	PLATE 5-2Dv6
CHECKED BY: M.L.D.	FILE NAME: H:\DRAWINGS\MRP\PLATES\PLATE 52Dv6.dwg			