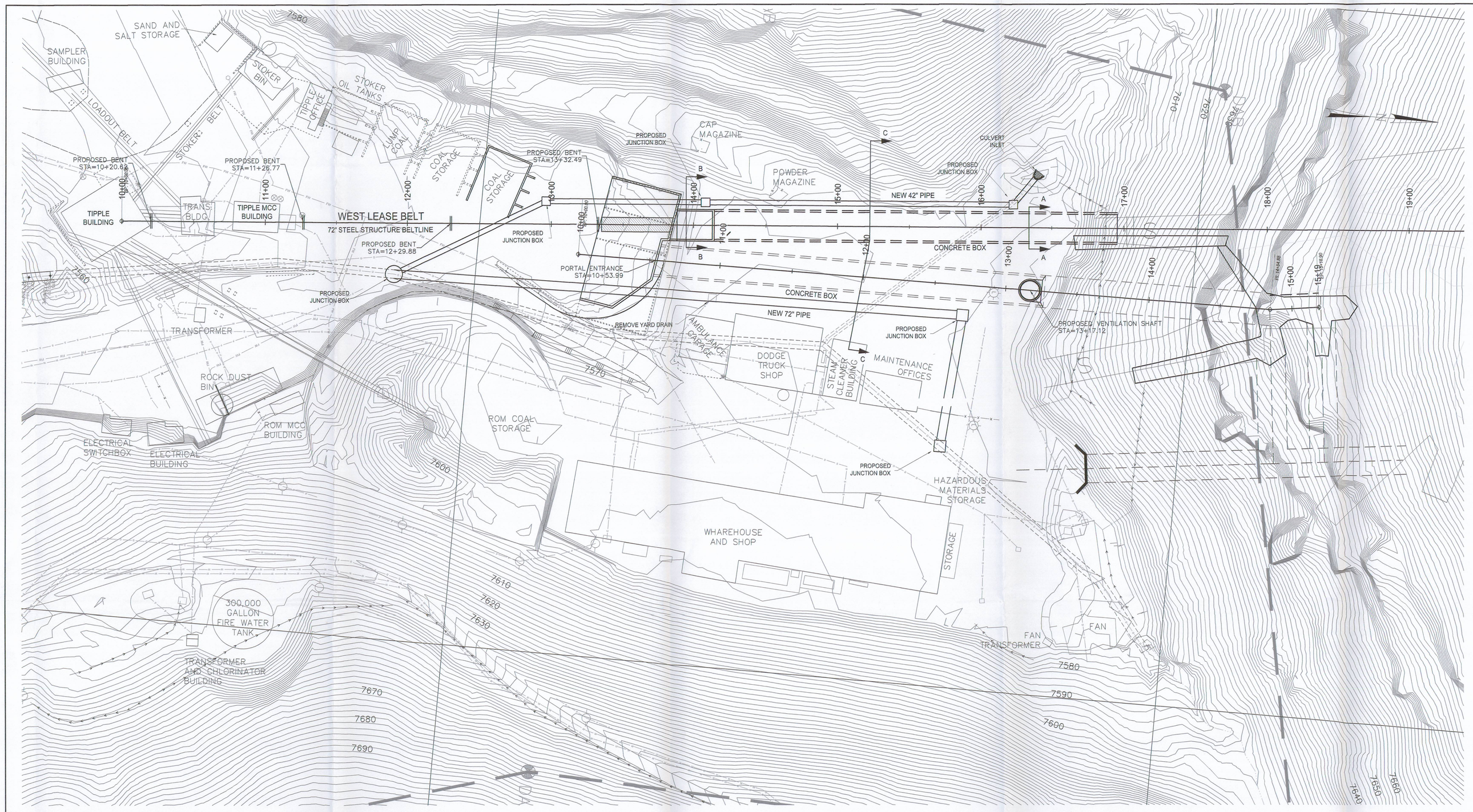

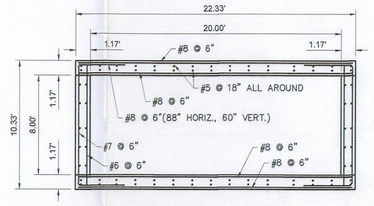

CONCRETE BOX SECTION A-A

SCALE = 1"=6'

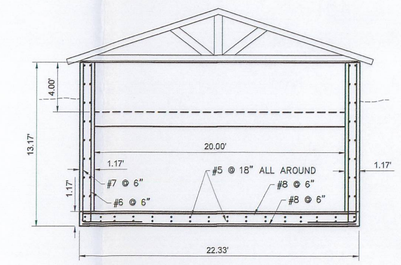

CONCRETE BOX SECTION B-B

SCALE = 1"=6'

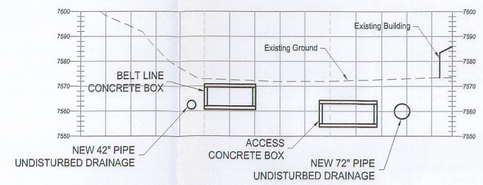

CONCRETE BOX LOCATIONS - SECTION C-C

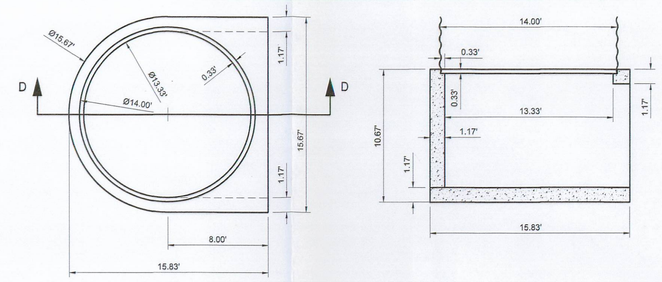

PLAN VIEW

SECTION D-D

VENTILATION SHAFT

SCALE = 1"=6'

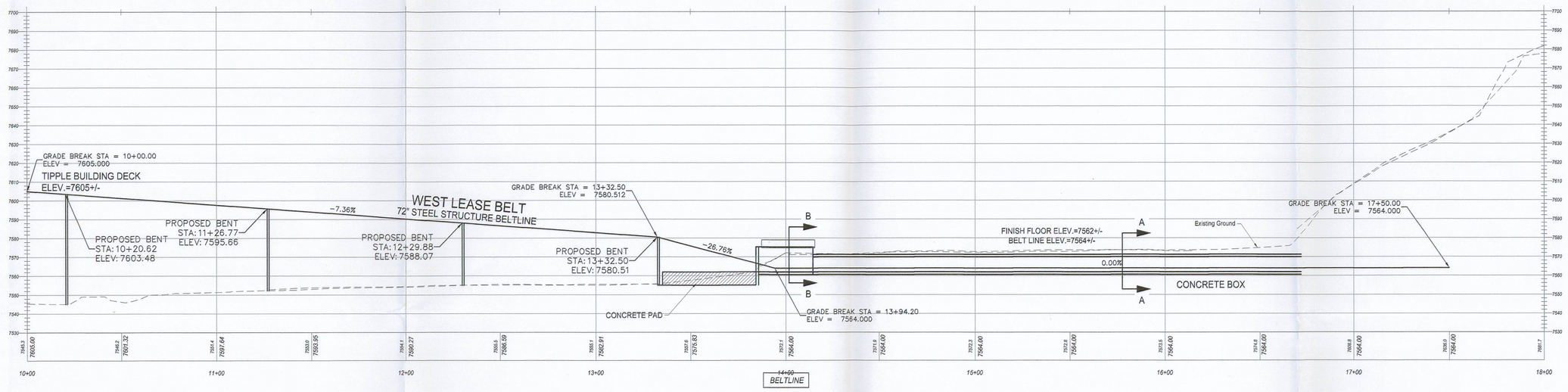

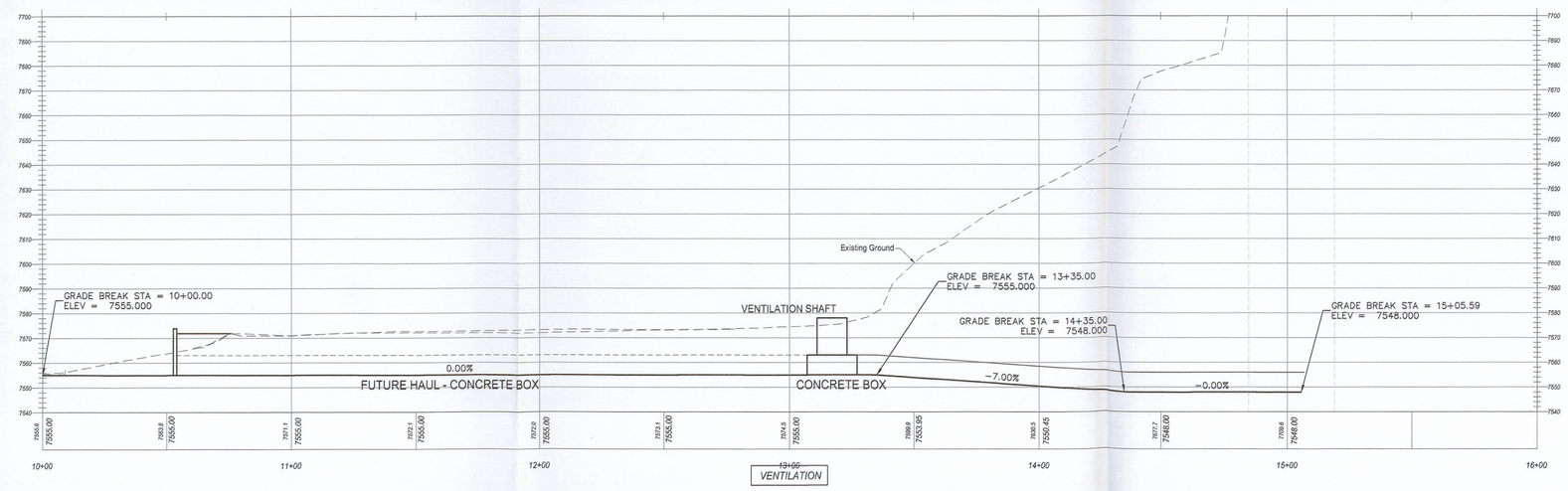

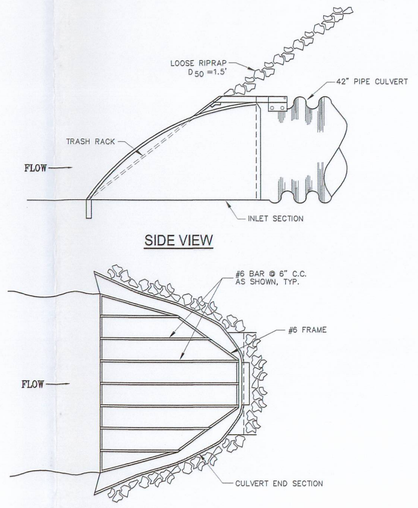

SIDE VIEW

PLAN VIEW
TRASH RACK

CULVERT INLET

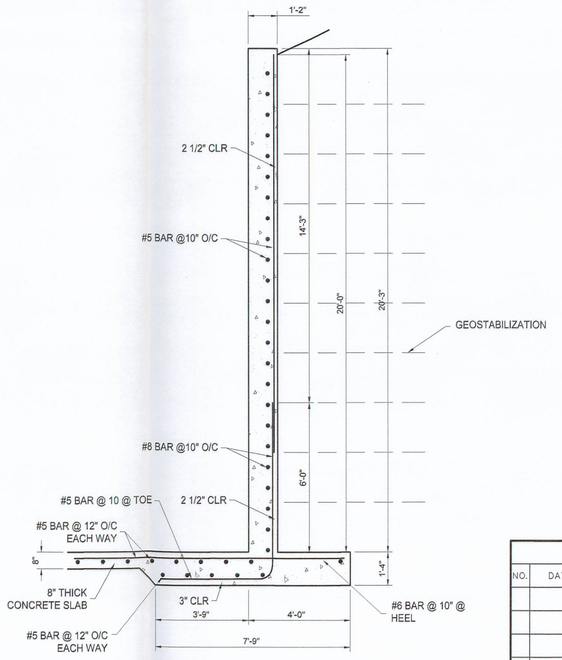

RETAINING WALL DETAIL

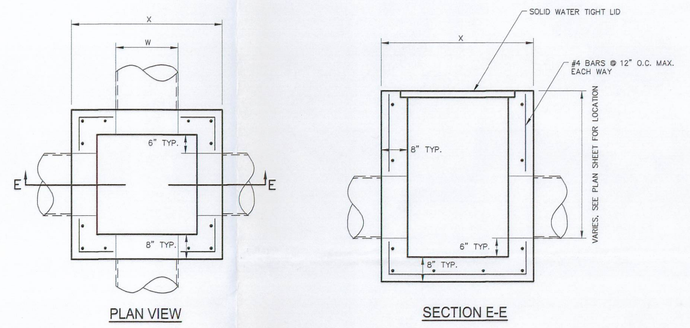

PLAN VIEW

SECTION E-E

JUNCTION BOX

1. W= PIPE DIAMETER
   TYP. SEE PLAN SHEET FOR SIZE
2. X=W+28

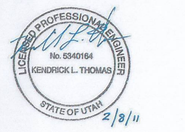

File in:
☐ Confidential
☐ Shelf
☒ Expandable
Date Filed 02/14/2011
See Volume 2
RECEIVED
FEB 14 2011
DIV. OF OIL, GAS & MINING

REVISIONS				
NO.	DATE	REQ. BY	DWG. BY	REMARKS

Canyon Fuel Company, LLC
SUFCO Mine
397 South 800 West – Salina, UT 84654
(435) 286-4880 Phone
(435) 286-4499 Fax

Sufco Mine West Lease Beltline Construction Drawings

SCALE:	DATE:	DRAWN BY:	ENGINEER:	SHEET NO.
VARIES	01/27/2011	JA	KT	1
CHECKED BY: KT	FILE NAME: H:\D/PROJ/0910-067/DWG/SITE_0910-067.DWG			