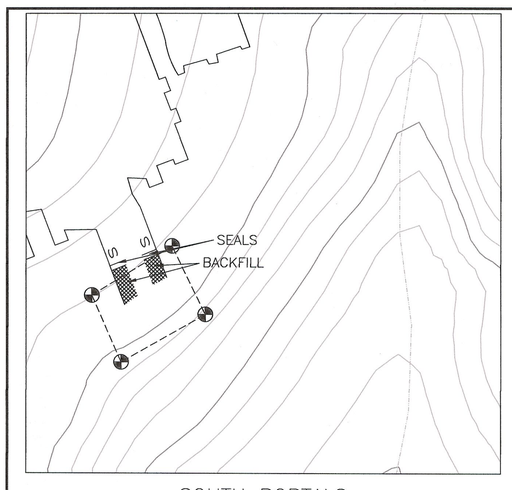

SOUTH PORTALS
SCALE: 1" = 100'

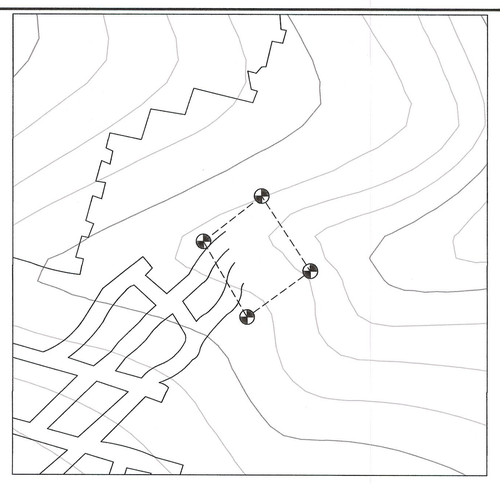

3 EAST PORTALS
SCALE: 1" = 100'

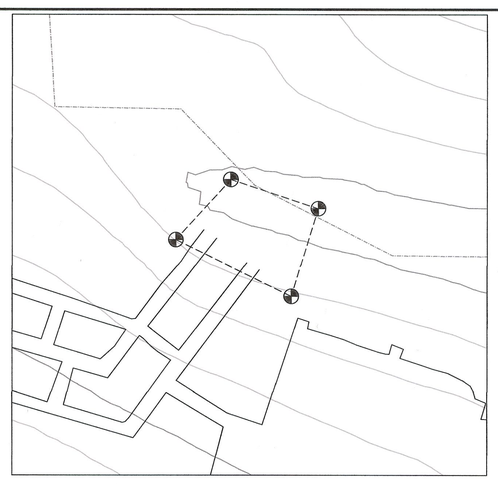

QUITCHUPAH PORTALS
SCALE: 1" = 100'

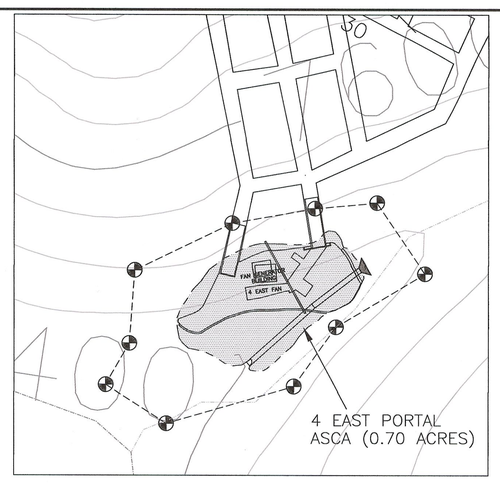

4 EAST FAN PORTALS
SCALE: 1" = 100'

SURFACE PORTAL FACILITIES – PRE MINING AND POST MINING TOPOGRAPHY

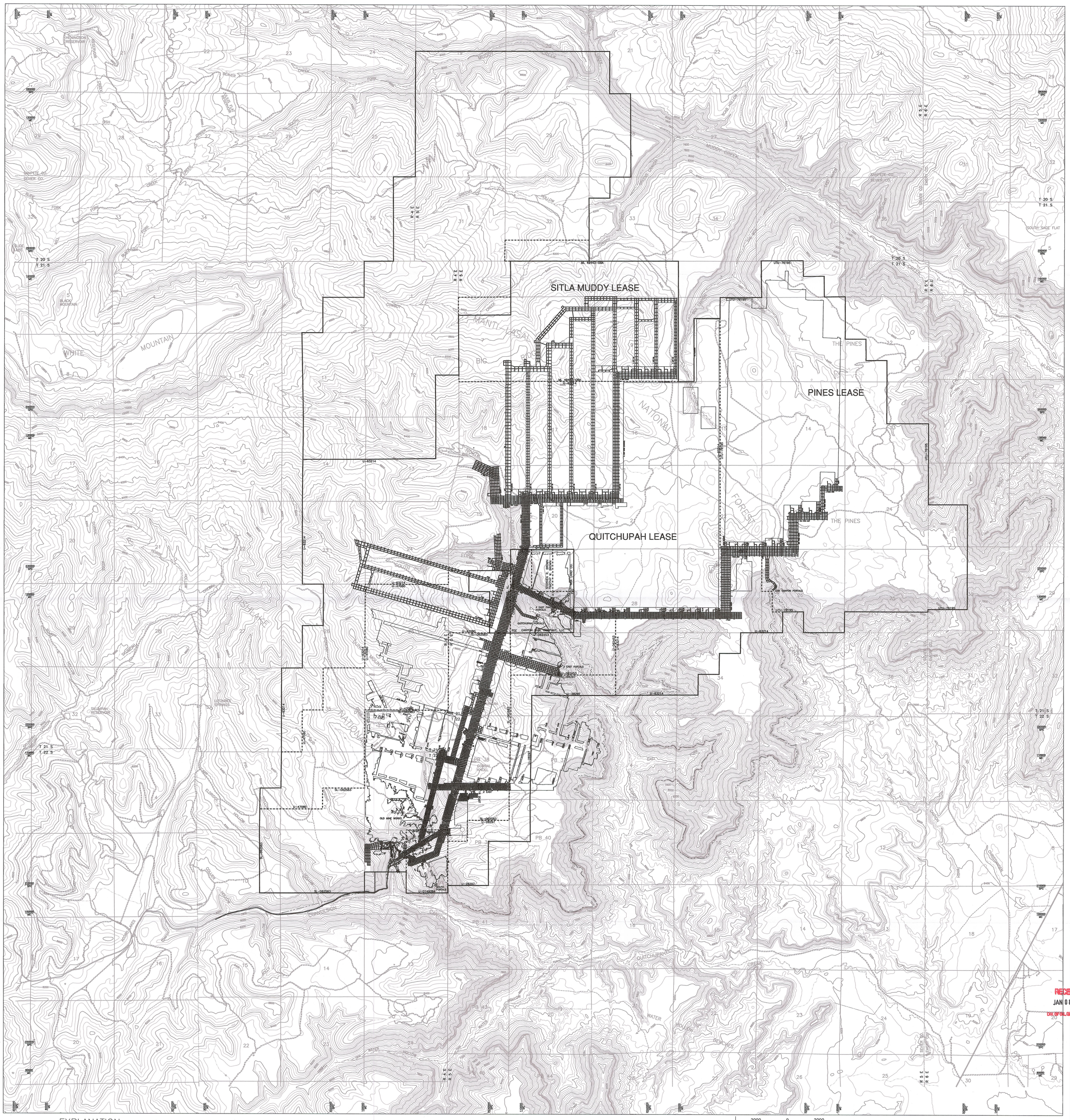

EXPLANATION

- SUFCO EXTERIOR LEASE BOUNDARY
- SUFCO INTERIOR LEASE BOUNDARY
- SUFCO PROPOSED LEASE MODIFICATION
- MINE COORDINATES
- STATE PLANE COORDINATES
- STREAM
- ESCARPEMENT
- OUTCROP
- PERENNIAL STREAM
- DISTURBED AREA BOUNDARY
- DISTURBED AREA BOUNDARY MARKER
- DRAIN LINE
- ALTERNATE SEDIMENT CONTROL AREA (ASCA)

REGISTERED PROFESSIONAL ENGINEER #334504-2202 JOHN D. BYARS STATE OF UTAH

I CERTIFY THE ITEMS SHOWN ON THIS DRAWING ARE ACCURATE TO THE BEST OF MY KNOWLEDGE

2000 0 2000

REVISIONS OR UP-DATES			DATE: MAY 26, 1999	
NO.	DATE	BY	DESIGNED BY:	
6	NOV. 12, 2003	MLD	DRAWN BY:	BDH\TRB
7	JUNE 17, 2004	MLD	CHECKED BY:	MLD
8	MAY 8, 2007	MLD		
9	MAY 24, 2010	MLD		
10	JAN. 08, 2013	VSM	SCALE:	1" = 2000'

FILENAME: H:\DRAWINGS\MRP\PLATES\WL 20 LE\PLATE 5-2Cv10.DWG

Canyon Fuel Company, LLC
SUFCO Mine

DETAIL OF PORTAL SURFACE FACILITIES

597 SOUTH SR 24
SALINA, UTAH 84654

DRAWING OR MAP NUMBER PLATE 5-2Cv10

RECEIVED
JAN 08 2013
DIV. OF OIL, GAS & MINING