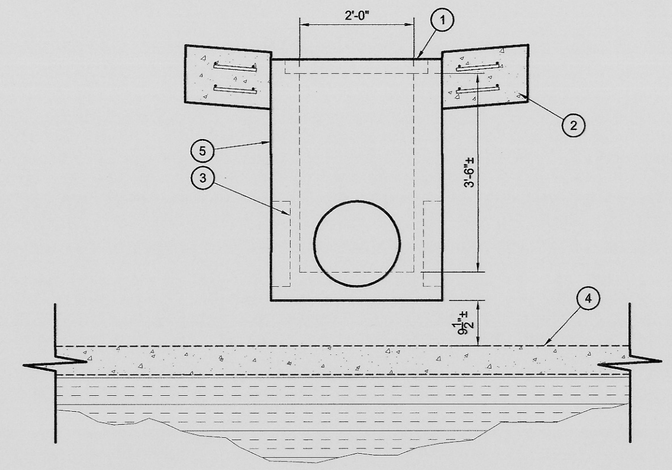

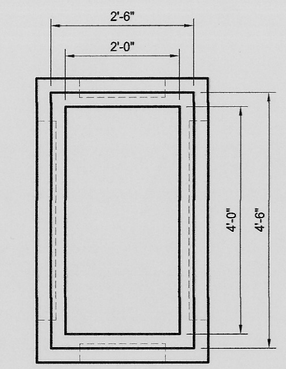

KEYNOTES

1. HEAVY DUTY TRAFFIC GRATE
2. CROSS GUTTER PER DETAIL D1/C301
3. PIPE KNOCKOUT
4. EXISTING 6" CONCRETE CAP OVER FOAM COVERED HAULAGE TUNNEL
5. PRECAST OR POURED IN PLACE CONCRETE BOX

K9	DETAIL	K14	DETAIL
1/2" = 1'-0"	TYPE '1' INLET BOX - ELEVATION VIEW	1/2" = 1'-0"	TYPE '1' INLET BOX - PLAN VIEW

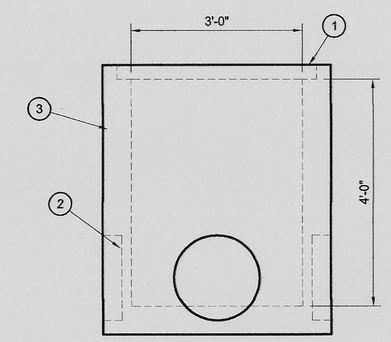

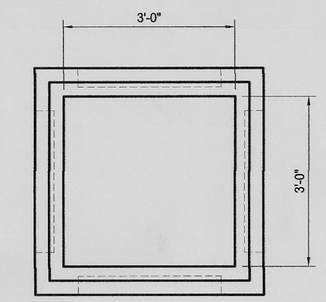

KEYNOTES

1. HEAVY DUTY TRAFFIC GRATE
2. PIPE KNOCKOUT
3. PRECAST OR POURED IN PLACE CONCRETE BOX

G9	DETAIL	G14	DETAIL
1/2" = 1'-0"	TYPE '2' INLET BOX - ELEVATION VIEW	1/2" = 1'-0"	TYPE '2' INLET BOX - PLAN VIEW

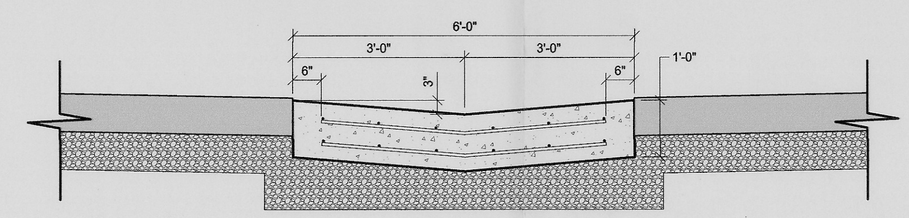

D9	DETAIL
1/2" = 1'-0"	CONCRETE CROSS GUTTER

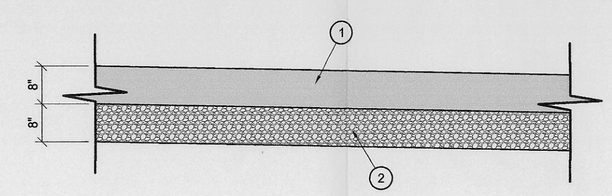

KEYNOTES

1. 8" OF ASPHALT
2. 8" OF UNTREATED BASE COURSE

RECEIVED
AUG 2 6 2013
DIV. OF OIL, GAS & MINING

File in: ☐ Confidential ☐ Shelf ☐ Expandable
Date Made: 8/26/2013 CH/LDOD2

A9	DETAIL
1/2" = 1'-0"	TYPICAL SECTION

STAMP:

Canyon Fuel Company, LLC
SUFCO Mine
597 South SR 24 - Salina, UT 84654
(435) 286-4880 Phone
(435) 286-4499 Fax

REVISIONS

NO.	DATE	REQ. BY	DWG. BY	REMARKS
1	08/07/2013	V.M.	T.R.B.	

SUFCO MINE
UPPER YARD - SITE DRAINAGE
DETAIL SHEET

SHEET NO.
APPENDIX
5-11

SCALE: 1/2" = 1" | DATE: 8/7/2013 | PROJ: #### | DRAWN BY: T.R.B. | ENGINEER: J.B. | CHECKED BY: J.B. | TILE NAME: H:\DRAWINGS\MRP\PLATES\UPYARD_5-11.dwg | SHEET SET: #### | _13Revised-SUFCOMP1.rdb

Brown, Trent; 8/9/2013 9:05 AM