C/041/002 Incoming

#5366

Canyon Fuel Company, LLC
A Subsidiary of Bowie Resources Partners, LLC.

Sufco Mine
John Byars
General Manager
597 South SR24
Salina, Utah 84654
(435) 286-4400
Fax (435) 286-4499

February 9, 2017

Permit Supervisor, Utah Coal Regulatory Program
Utah Division of Oil, Gas and Mining
1594 West North Temple, Suite 1210
PO Box 145801
Salt Lake City, UT 84114-5801

Re: Amendment to MRP to Correct WRS Expansion Hydrology Information, SUFCO Mine, Canyon Fuel Company, LLC, Permit Number C/041/0002

Dear Sirs,

Please find enclosed with this letter an amendment to the Sufco Mine Permit to address changes to the WRS expansion hydrology information.

If you have any questions or need additional information please contact Bryant Bunnell at (435) 286-4490 or Vicky Miller at (435) 286-4481.

CANYON FUEL COMPANY, SUFCO Mine

Jake Smith
TECHNICAL SERVICES MANAGER

Encl.
cc: DOGM Correspondence File

RECEIVED
FEB 13 2017
DIV. OF OIL, GAS & MINING

APPLICATION FOR COAL PERMIT PROCESSING

Permit Change ☒ New Permit ☐ Renewal ☐ Exploration ☐ Bond Release ☐ Transfer ☐

Permittee: Canyon Fuel Company, LLC
Mine: Sufco Mine **Permit Number:** C/041/002
Title: WRS Hydrology Amendment
Description, Include reason for application and timing required to implement:

Instructions: If you answer yes to any of the first eight (gray) questions, this application may require Public Notice publication.

☐ Yes ☒ No 1. Change in the size of the Permit Area? Acres: _____ Disturbed Area: _____ ☐ increase ☐ decrease.
☐ Yes ☒ No 2. Is the application submitted as a result of a Division Order? DO# _____
☐ Yes ☒ No 3. Does the application include operations outside a previously identified Cumulative Hydrologic Impact Area?
☐ Yes ☒ No 4. Does the application include operations in hydrologic basins other than as currently approved?
☐ Yes ☒ No 5. Does the application result from cancellation, reduction or increase of insurance or reclamation bond?
☐ Yes ☒ No 6. Does the application require or include public notice publication?
☐ Yes ☒ No 7. Does the application require or include ownership, control, right-of-entry, or compliance information?
☐ Yes ☒ No 8. Is proposed activity within 100 feet of a public road or cemetery or 300 feet of an occupied dwelling?
☐ Yes ☒ No 9. Is the application submitted as a result of a Violation? NOV # _____
☐ Yes ☒ No 10. Is the application submitted as a result of other laws or regulations or policies?
Explain: _____
☐ Yes ☒ No 11. Does the application affect the surface landowner or change the post mining land use?
☐ Yes ☒ No 12. Does the application require or include underground design or mine sequence and timing? (Modification of R2P2)
☐ Yes ☒ No 13. Does the application require or include collection and reporting of any baseline information?
☐ Yes ☒ No 14. Could the application have any effect on wildlife or vegetation outside the current disturbed area?
☐ Yes ☒ No 15. Does the application require or include soil removal, storage or placement?
☐ Yes ☒ No 16. Does the application require or include vegetation monitoring, removal or revegetation activities?
☐ Yes ☒ No 17. Does the application require or include construction, modification, or removal of surface facilities?
☐ Yes ☒ No 18. Does the application require or include water monitoring, sediment or drainage control measures?
☒ Yes ☐ No 19. Does the application require or include certified designs, maps or calculation?
☐ Yes ☒ No 20. Does the application require or include subsidence control or monitoring?
☐ Yes ☒ No 21. Have reclamation costs for bonding been provided?
☐ Yes ☒ No 22. Does the application involve a perennial stream, a stream buffer zone or discharges to a stream?
☐ Yes ☒ No 23. Does the application affect permits issued by other agencies or permits issued to other entities?

Please attach one (1) review copy of the application.

I hereby certify that I am a responsible official of the applicant and that the information contained in this application is true and correct to the best of my information and belief in all respects with the laws of Utah in reference to commitments, undertakings, and obligations, herein.

Jacob D. Smith
Print Name

Sign Name, Position, Date

Subscribed and sworn to before me this 9 day of February, 20 17

Notary Public

My commission Expires: _____, 20___ }
Attest: State of _____ } ss:
County of _____

JACQUELYN NEBEKER
Notary Public
State of Utah
My Commission Expires 03/24/2019
COMMISSION NUMBER 681827

For Office Use Only:	Assigned Tracking Number:	Received by Oil, Gas & Mining
		RECEIVED FEB 13 2017 DIV. OF OIL, GAS & MINING

Form DOGM- C1 (Revised 9/17/2013)

APPLICATION FOR COAL PERMIT PROCESSING
Detailed Schedule Of Changes to the Mining And Reclamation Plan

Permittee: Canyon Fuel Company, LLC
Mine: Sufco Mine **Permit Number:** C/041/002
Title: WRS Hydrology Amendment

Provide a detailed listing of all changes to the Mining and Reclamation Plan, which is required as a result of this proposed permit application. Individually list all maps and drawings that are added, replaced, or removed from the plan. Include changes to the table of contents, section of the plan, or other information as needed to specifically locate, identify and revise the existing Mining and Reclamation Plan. Include page, section and drawing number as part of the description.

			DESCRIPTION OF MAP, TEXT, OR MATERIAL TO BE CHANGED
☐ Add	☐ Replace	☐ Remove	Waste Rock Site Disposal Site Expansion
☐ Add	☒ Replace	☐ Remove	Pages 7-17 and 7-23
☐ Add	☒ Replace	☐ Remove	Map 5A
☐ Add	☒ Replace	☐ Remove	Appendix VII (Hydrology Report)
☐ Add	☐ Replace	☐ Remove	
☐ Add	☐ Replace	☐ Remove	
☐ Add	☐ Replace	☐ Remove	
☐ Add	☐ Replace	☐ Remove	
☐ Add	☐ Replace	☐ Remove	
☐ Add	☐ Replace	☐ Remove	
☐ Add	☐ Replace	☐ Remove	
☐ Add	☐ Replace	☐ Remove	
☐ Add	☐ Replace	☐ Remove	
☐ Add	☐ Replace	☐ Remove	
☐ Add	☐ Replace	☐ Remove	
☐ Add	☐ Replace	☐ Remove	
☐ Add	☐ Replace	☐ Remove	
☐ Add	☐ Replace	☐ Remove	
☐ Add	☐ Replace	☐ Remove	
☐ Add	☐ Replace	☐ Remove	
☐ Add	☐ Replace	☐ Remove	
☐ Add	☐ Replace	☐ Remove	
☐ Add	☐ Replace	☐ Remove	
☐ Add	☐ Replace	☐ Remove	
☐ Add	☐ Replace	☐ Remove	
☐ Add	☐ Replace	☐ Remove	
☐ Add	☐ Replace	☐ Remove	
☐ Add	☐ Replace	☐ Remove	

Any other specific or special instruction required for insertion of this proposal into the Mining and Reclamation Plan.

Received by Oil, Gas & Mining

RECEIVED
FEB 13 2017
DIV. OF OIL, GAS & MINING

732.200 Sedimentation Ponds

Existing Pond - A sedimentation pond was constructed down gradient from the rock fill area to control sediment removed from the disturbed areas by surface runoff. The pond was constructed prior to disturbing any other areas of the site. It will remain in place until phase 6 of the expansion is constructed as shown on Map 2F. ~~the new pond is constructed as shown on Map 7 and described in Appendix VII.~~

The sediment pond provides capacity in excess of requirements with present project conditions. The principle maintenance requirement will be sediment removal. When the sediment storage area is 60 percent full, which is at an average elevation of 7886.00 feet, sediment will be removed from the pond.

The pond consists of an excavated storage basin. Suitable material removed from the excavation was used to construct an embankment on the downstream perimeter of the excavation to yield a maximum storage depth in the pond of 5.70 feet.

The embankment has a top width of I0 feet, a minimum height of 6.8 feet with exterior side slopes of 2.5h:lv. The bottom of the pond was constructed at an elevation of 7885.00 feet.

In accordance with Section 73-5-12 of the Utah Code Annotated 1953, before commencing construction of the sediment pond for the project, written notice was given to the State Engineer, Division of Water Rights.

The embankment and excavated pond area were grubbed of the organic material and the topsoil removed and stored for future use. It is estimated that 24 inches of topsoil was removed from the area.

The top 9 inches of the grubbed and stripped area for sediment pond embankment construction was scarified and recompacted to 90 percent of the maximum dry density as determined by ASTM D1557 procedures. Moisture content during compaction was maintained at -1 to +3 percent of the optimum as determined by ASTM D1557.

Runoff Control - Surface precipitation falling directly on and infiltrating the underground development waste fill shall be channeled to a sedimentation pond. The active pad area for waste placement will be sloped at approximately 2% toward the nearest drainage control structures to promote drainage of precipitation off the pad area. The drainage control structures will direct the runoff to the sediment pond(s) for treatment unless specified differently. An interception ditch will be routed down the slope of the fill of the active pad to the base of the fill where runoff will be collected by a ditch. This configuration should prevent the impounding of water on the surface of the fill. Designs for these ditches are in Appendix III, Engineering Calculations and in Appendix VII. The sedimentation pond is designed to handle the 10 year, 24 hour precipitation event. Design criteria for the sedimentation pond are presented in Appendices III and VII.

Surface drainage from the areas above the site should be diverted around the disposal area. Surface drainage from the county road above the site will be controlled by a shoulder ditch and diverted away from the fill area. Design criteria for the site diversion ditches are presented in Appendices III and VII.

The sediment control measures at the waste rock disposal site are designed to adequately contain the sediment that is produced from the disturbed area. Surface water is collected from the undisturbed areas and discharged below the disturbed area. Surface water collected within the disturbed area is collected and settled in the sedimentation pond(s) or the retention pond. No discharges to date have occurred from the sedimentation pond and none are expected. No impact to surface water quality is expected. There were no springs or seeps within the proposed fill area at the time of the investigation which would require special treatment.

When the existing sedimentation pond is replaced Existing Diversion (ED)-1 and ED-2 channels will be reshaped to become a Combined Channel (CC)-1. CC-1 will channel runoff from DW-1 through Disturbed Culvert (DC)-1 into Diversion Ditch ~~(DD)-5~~ (DD)-1. DD-5 will convey the runoff from DW-1 and DW-2 to the new sedimentation pond. Runoff from DW-3 and DW-4 will follow the natural contours into the sediment pond inlet. DC-1 and DC-2 will remain during phased development but will be removed for the final reclamation of the site. DD-1 through DD-4 and DD-6 through DD-10 are designed to accept runoff from the largest watershed areas, but will exist and operate as required to convey runoff during the phased operations.

Appendix VII

Hydrology Report

SUFCO WASTE ROCK PILE HYDROLOGY

JANUARY 2017

PREPARED FOR:

SUFCO Mine

PREPARED BY:

Jones & DeMille Engineering

1-800-748-5275

Project #: 1406-120

RICHFIELD ▪ PRICE ▪ MANTI ▪ ROOSEVELT ▪ AMERICAN FORK ▪ ST. GEORGE

TABLE OF CONTENTS

1. Hydrology Introduction 1

2. Operational Hydrology 2

2.1. Phased Hydrology 3

3. Hydraulic Evaluation 4

3.1. Channel Sizing 4

3.2. Riprap Sizing 5

4. Runoff Volume 8

5. Sediment Volume 8

5.1. Sediment Pond Capacity 9

6. Conclusions 9

Appendix A. Hydrologly Calculations A-1

A.1. Hydrology Parameters A-1

A.2. HEC-HMS Calculations A-2

Appendix B. Hydraulics B-1

B.1. Channel Sizing B-1

B.2. Riprap Sizing B-5

B.3. Culvert Sizing B-8

Appendix C. Conveyance Structures Details C-12

TABLES

Table 1. Hydrology Parameters 2

Table 2. Disturbed Watershed Parameters 3

Table 3. Phase Watershed Hydrologic Parameters 4

Table 4. Channel Design Criteria 5

Table 5. Culvert Criteria 5

Table 6. Riprap Size 8

Table A 1. Global Summary Results for Disturbed Drainage, 10yr 24-hr Storm Event A-2

Table A 2. Global Summary Results for Phase Subbasins, 10yr 24-hr Storm Event A-3

Table A 3. Global Summary Results for Undisturbed Drainage, 10yr 24-hr Storm Event A-4

Table B 1. Riprap Sizing for CC-1 ..... B-5

Table B 2. Riprap sizing for DD-5 ..... B-6

Table B 3. Riprap sizing for UD-1 ..... B-7

1. HYDROLOGY INTRODUCTION

The purpose of this hydrologic evaluation is to quantify the storm water runoff peak flows and volumes for the 10-year 24-hour storm according to the Utah Division of Oil, Gas, and Mining requirement R645-301-742&743. The results are then used in the hydraulic evaluation below to design the storm water conveyance (e.g., channels, culverts, etc. and sedimentation structures to meet or exceed the runoff flows and volumes.

The U.S. Soil Conservation Service (SCS) Curve Number (CN) methodology, as defined in the National Engineering Handbook (NRCS, 2004), was selected to estimate peak flows and hydrographs at the project site. The CN values used were obtained from a previous study "Geotechnical/Hydrological Investigation Report Waste Rock Disposal Site" by Sergent, Hauskins, and Beckwith (1984) located in Appendix II, Volume 3, Waste Rock Disposal Site (WRDS M&RP). In selecting CN values, the waste rock pile is assumed to have no vegetation due to it being a disturbed area. Some contemporaneous reclamation may occur as the site is developed; however, the operational hydrologic design conservatively assumes no contemporaneous reclamation will occur. Therefore the disturbed areas excluding the pond were assigned a CN value of 90, previously reclaimed areas were assigned a CN value of 80, and undisturbed areas were assigned a CN of 65. The sedimentation pond area was assigned a CN value of 98 due to the potential for the pond to contain water during a storm event. The Sevier County gravel pull off area directly northwest of the waste rock pile was assigned a CN value of 80.

Following SCS methodology, the Watershed Lag Method estimates the initial abstraction (I_a), maximum retention (S), and lag time (lg) using the following equations (NRCS, 2004).

$$I_a = 0.2S$$

$$S = \frac{1000}{CN} - 10$$

$$Lg = \frac{L^{0.8}(S+1)^{0.7}}{1900\sqrt{Y}}$$

where:

I_a = initial abstraction (in)
CN = Curve Number
L = watercourse length (ft.)
S = maximum retention (in)
Lg = lag time (hr)
Y = average drainage basin slope (%)

Table 1 lists the parameters for the drainages.

Table 1. Hydrology Parameters

Drainage Basin	Area (ft^2)	Area (acres)	Area (mi^2)	Length (ft)	Slope (%)	CN	S (in)	Initial Abstraction (in)	Lag Time (hr)	Lag Time (min)	Tc (hr)	Tc (min)
DW-1	1373964	31.5	0.049	1650	9.0	90.00	1.1	0.2	0.1	7	0.2	11
DW-2	272336	6.3	0.010	525	20.8	80.00	2.5	0.5	0.0	2	0.1	4
DW-3	54266	1.2	0.002	180	9.5	80.00	2.5	0.5	0.0	2	0.0	3
DW-4	70375	1.6	0.003	515	9.5	80.00	2.5	0.5	0.1	4	0.1	6
DW-5	68097	1.6	0.002	1	0.0	98.00	0.2	0.0	0.2	11	0.3	19
UW-1	56889	1.3	0.002	200	6.0	80.00	2.5	0.5	0.0	2	0.1	4
UW-2	325816	7.5	0.012	340	10.0	65.00	5.4	1.1	0.1	4	0.1	6
UW-3	443875	10.2	0.016	920	18.0	65.00	5.4	1.1	0.1	6	0.2	11
UW-4	3153906	72.4	0.113	1040	23.0	65.00	5.4	1.1	0.1	6	0.2	10
UW-5	5770022	132.5	0.207	2000	27.0	65.00	5.4	1.1	0.2	10	0.3	16

HEC-HMS version 3.3 was used to calculate the storm water discharge for the design storm. The design storm, 10-year 24-hour, depth of 1.92 inches was used at the project location and taken from the National Oceanic and Atmospheric Administration (NOAA) ATLAS 14, Point Precipitation Frequency Data Server (http://hdsc.nws.noaa.gov/hdsc/pfds/sa/ut_pfds.html, also in Appendix A). Site watershed areas and average slopes were calculated from a 2-foot contour interval topographic map provided by SUFCO Mine using AutoCAD 2014 software. Additionally, the Water Hollow Ridge and Accord Lakes USGS topographic maps with 40- foot contour were used in areas not within the SUFCO topographic map.

HEC-HMS runoff calculations were performed for the site with a design storm of a standard 24 hour duration as required by the SCS method and the SCS Type II distribution was selected based on the project site location. The HEC-HMS model input and results are included in Appendix A.

2. OPERATIONAL HYDROLOGY

The delineated operational watersheds are shown on Map 5 located in the WRDS M&RP. The operational hydrology plan is shown on Map 5A. Peak flows and total runoff volumes for the site drainage subareas are tabulated in Appendix A and in Table 2.

Table 2. Disturbed Watershed Parameters

Hydrologic Element	Basin Identifier	Peak Discharge (CFS)	Volume (Acre-Feet)
DW*-1	Waste Rock Pile	37.5	2.7
DW-2	Topsoil/Subsoil Pile	4.0	0.3
DW-3	Onsite Disturbed Area	0.8	0.1
DW-4	Onsite Disturbed Area	1.2	0.1
DW-5	Sedimentation Pond	1.9	0.2
Outfall**	Outfall	45.4	3.3

Disturbed Watershed** * Outfall is total runoff flows and volumes from subareas**

The areas contributing to the site runoff discharged to the sedimentation pond are the waste rock pile, topsoil/subsoil piles, disturbed areas, and sedimentation pond area. Runoff from the undisturbed watersheds will be conveyed around disturbed areas and the sedimentation pond as shown on Maps 5 and 5A (WRDS M&RP).

When the existing sedimentation pond is replaced, Existing Diversion (ED)-1 and ED-2 channels will be reshaped to become a Combined Channel (CC)-1. CC-1 will channel runoff from the complete build-out watershed DW-1 through Disturbed Culvert (DC)-1 into Diversion Ditch (DD)-10. DD-10 will convey the runoff from DW-1 and DW-2 to the new sedimentation pond. Runoff from DW-3 and DW-4 will follow the natural contours into the sediment pond inlet. DC-1 and DC-2 will remain during phased development but will be removed for final reclamation of the site. DD-1 through DD-9 are designed to accept runoff from the largest watershed areas, but will exist and operate as required to convey runoff during the phased operations.

Undisturbed Watershed (UW)-1 and UW-2 runoff will be channeled around the sedimentation pond by UB-1, and will continue downstream of the site through the natural drainage. UW-3 and a portion of UW-4 will drain into UD-1 and through the level spreader to follow the existing terrain and be routed around the sedimentation pond, thereafter continuing through the natural drainage. A portion of UW-4 and UW-5 will flow through the natural drainage.

2.1. PHASED HYDROLOGY

DW-1 will be constructed in phases as shown on Map 4A thru Map 4F. Phase 6 is not part of DW-1 but Phase 1 – 5 are subareas of watershed DW-1. For each phase operation a drainage ditch (Disturbed Ditch Detail) will be located at the lowest elevation contour of the phased boundary to contain and transport all runoff to the sediment pond (DD-1 thru DD-9). Table 3 shows the hydrologic parameters for each Phase area.

Table 3. Phase Watershed Hydrologic Parameters

Drainage Basin	Area (ft^2)	Area (acres)	Area (mi^2)	Length (ft)	Slope (%)	CN	S (in)	Initial Abstraction (in)	Lag Time (hr)	Lag Time (min)	Tc (hr)	Tc (min)
PH-1	268958	6.2	0.0096	2400	9.0	90	1.1	0.2	0.1	9	0.2	15
PH-2	184079	4.2	0.0066	610	9.0	90	1.1	0.2	0.1	3	0.1	5
PH-3	190830	4.4	0.0068	590	9.0	90	1.1	0.2	0.0	3	0.1	5
PH-4	200548	4.6	0.0072	730	9.0	90	1.1	0.2	0.1	3	0.1	6
PH-5	185118	4.2	0.0066	620	9.0	90	1.1	0.2	0.1	3	0.1	5
PH-6	38548	0.9	0.0014	440	6.0	90	1.1	0.2	0.0	3	0.1	5

The total runoff volume for all phase areas is 39.80 CFS. DD-2 thru DD-4 will report to DD-1 and DD-5 thru DD-9 will report to CC-1. DD-1 will report to CC-1. The HEC-HMS volume and peak flow summary can be found in Appendix A.

3. HYDRAULIC EVALUATION

This hydraulic evaluation was conducted to determine adequate design parameters for the construction of storm water conveyances (berms and channels) and the sedimentation pond. Channel sizing was conducted using the Flow Master software from Bentley, Inc. The hydraulic calculations can be found in Appendix B.

3.1. CHANNEL SIZING

The riprap cross-section for CC-1 has a 36 inch bottom width with 2H:1V sides and a 24 inch overall depth shown in Appendix B and Appendix C. The CC-1 cross-section will be used for DD-5 which flows into the sedimentation pond. CC-1 will convey the required 37.5 cubic feet per second (CFS) from DW-1. DD-10 will convey the required 45.4 CFS from CC-1 and DW-2 thru DW-4 and with at least 6 inches of freeboard.

The drainage ditch conveying runoff from the largest contributing area (DD-1) was used as the design criteria for ditches DD-1 thru DD-9. Approximately 31.0 CFS from 23.6 acres of DW-1 report to DD-1. Ditches DD-1 thru DD-4 and DD-5 thru DD-9 will be 12 inches deep, have a 3 foot bottom width and 2H:1V sides slopes.

DB-1 and DB-2 are berms designed to convey runoff from the top soil and subsoils piles to DC-3. The berm will be constructed 1.25 feet tall with 2H:1V sides slopes creating a ditch with the existing pile, providing 6 inches of freeboard.

UB-1 will have 2H:1V side slopes, with a depth of 12 inches and 6 inches of free board. UD-1 is designed as a riprap channel with a 12 inch bottom width, 2H:1V sides slopes and 12 inches deep.

The channel design calculations are included in Appendix B and summarized in Table 4. Designs for ED-1, ED-2, and Ditch No. 2 are discussed in Section 2.4.1 of the WRDS M&RP.

Table 4. Channel Design Criteria

Channel Designation	Design slope (ft./ft.)	Cross Section	Side Slope	Bottom Width (Feet)	Normal Depth (Feet)	Channel Depth (Feet)	Manning's n	Lining
CC-1	0.058	Trapezoidal	2H:1V	3	1.38	2.00	0.069	Riprap
DD-10	0.036	Trapezoidal	2H:1V	3	1.70	2.00	0.069	Riprap
DD-1, DD-2, DD-3, DD-4, DD-5, DD-6, DD-7, DD-8, DD-9	0.090	Trapezoidal	2H:1V	3	0.54	1.00	0.020	Earth
DB-1, DB-2	0.030	Berm	2H:1V	-	0.75	1.25	0.035	Earth
UD-1	0.108	Trapezoidal	2H:1V	1	0.13	1.00	0.060	Riprap
UB-1	0.036	Berm	2H:1V	-	0.16	1.00	0.045	Earth

Table 5 shows the designed culverts and the flows required for the sizing calculations. The "Max Flow" column represents flow rates from a culvert running at capacity while the "Required Flow" column represents flow rates from the design storm runoff. DC-1 and DC-2 are similarly sized to enable the area flow to pass through either. UC-3 is oversized to accommodate runoff from storm events larger than the designed storm because of the size of the undisturbed area from which it will convey runoff. UC-4 discharges treated water into an existing natural drainage.

Table 5. Culvert Criteria

Culvert	Required Flow (CFS)	Size (inches)	Max Flow (CFS)
DC-1	37.5	30	53.5
DC-2	37.5	30	53.5
DC-3	4.0	12	21.1
UC-3	5.2	24	60.0
UC-4	50.6	36	161.5

3.2. RIPRAP SIZING

Riprap lining is used to limit the erosion in earthen channels. The following calculations were conducted to determine an applicable size for the rock riprap to line the channels on this site.

Water depth, channel velocity, bend radius, and channel width were determined by using available channel cross sections and gradient information and applying open channel flow hydraulic calculations.

Riprap size was determined using the average size of the methods listed:

Maynord

$$d_{30} = SF \times Cs \times Ct \times Cv \times D \times \left(\left(\frac{\gamma}{\gamma_s - \gamma}\right)^{0.5} \times \frac{V}{(K1 * g * D)^{0.5}}\right)^{2.5}$$

$$Cv = 1.283 - 0.2 \times log\left(\frac{R}{W}\right)$$

$$K1 = \left(1 - \frac{\sin^2 \theta}{\sin^2 \Phi}\right)^{0.5}$$

$D = average\ water\ depth\ in\ channel$ (ft)

$SF = safety\ factor = 1.2$

$Cv = velocity\ correction\ factor$

$Ct = thickness\ coefficient$

$Cs = stability\ coefficient$

$K1 = side\ slope\ correction$

$V = local\ depth\ averaged\ velocity, (ft/s)$

$g = acceleration\ due\ to\ gravity$

$\gamma = unit\ weight\ of\ water, (pcf)$

$\gamma_s = unit\ weight\ of\ stone, (pcf)$

$^{\theta}$ = *angle of rock from the horizontal*

$^{\Phi}$ = *angle of repose*

$R = centerline\ bend\ radius$

$W = water\ surface\ width$

USBR

$$d_{50} = 0.043\, V_a^{2.06}$$

$V_a = average\ channel\ velocity\ (ft/s)$

Isbash

$$d_{50} = \frac{{V_a}^2}{2 \times g \times C^2 \times (G_s - 1)}$$

$V_a = average\ channel\ velocity\ (ft/s)$

$g = acceleration\ due\ to\ gravity$

$C = 0.86\ for\ high\ and\ 1.2\ for\ low\ tyrbulence\ zones$

$G_s = specific\ gravity\ of\ stone$

HEC-11

$$d_{50} = {d_{50}}' \times C_f \times C_s$$

$$d'_{50} = 0.001 \times \frac{{V_a}^3}{K^{1.5} \times D^{0.5}}$$

$$C_f = \left(\frac{SF}{1.2}\right)^{1.5}$$

$$C_s = \frac{2.12}{(G_s - 1)^{1.5}}$$

$V_a = average\ channel\ velocity\ (ft/s)$

$$K = side\ slope\ correction\ factor\ = \left(1 - \frac{\sin^2\theta}{\sin^2\varphi}\right)^{0.5}$$

$D = average\ water\ depth\ in\ channel$ (ft)

$\theta = angle\ of\ side\ slope\ to\ horizontal$

$\varphi = angle\ of\ repose\ for\ stone$

$SF = safety\ factor = 1.5$

$G_s = specific\ gravity\ of\ stone$

ASCE

$$d_{50} = \left(\frac{6W_{50}}{\pi \times \gamma_s}\right)^{0.333}$$

$$W_{50} = weight\ of\ stone\ (lbs) of\ diameter\ d_{50} = 0.000041 \frac{G_s {V_x}^6}{(G_s - 1)^3 \cos^3(\theta)}$$

$$G_s = specific\ gravity\ of\ stone$$

$$V_x = \frac{4}{3} V_a\ for\ impinging\ flows\ and \frac{2}{3} V_a for\ tangential\ flows$$

$$V_a = average\ channel\ velocity\ (ft/s)$$

$$\gamma_s = unit\ weight\ of\ stone, (pcf)$$

$$\theta = angle\ of\ side\ slope\ to\ horizontal$$

Based upon the proceeding equations, the average channel depth, velocity, and discharge were used in the calculations. The results are shown in Table 6. The resulting calculated d_{50} riprap size ranges from 1.0 to 5.2 inches. For the final design, a d_{50} = 6 inches was selected for CC-1, DD-10 and UD-1. Although it may be an over design for the smaller channels it will make constructability simpler. See Appendix B for riprap calculations.

An 8" layer of riprap will be placed on the inside bank of the sediment pond to prevent any erosion from possible wave action.

Table 6. Riprap Size

Reach	Flow Rate (ft^3/s)	Velocity (ft/s)	Slope (%)	Channel Width (ft)	Side Slope H:V	D_{50} (in)
CC-1	37.5	5.4	5.8	3	2:1	5.2
DD-5	45.4	5.3	3.6	3	2:1	4.3
UD-1	0.3	2.4	10.8	1	2:1	1.0

4. RUNOFF VOLUME

The total runoff volume contributing to the sedimentation pond resulting from a 10-year 24-hour storm event for disturbed areas DW-1 through DW-5 is approximately 3.3 acre-feet. The total runoff volume of undisturbed areas conveyed around the pond is approximately 2.0 acre-feet.

5. SEDIMENT VOLUME

The average annual anticipated sediment yield from disturbed areas at the site was calculated using an assumed value of 0.1 acre-feet per acre per year from Section 7.4.2.2 of the SUFCO Mining and

Reclamations Plan. The sediment yield from the undisturbed areas was 0.04 acre-feet per year from the study by Sergent, Hauskins, and Beckwith (1984).

The average annual sediment yield in acre-feet per acre for each watershed was multiplied by the watershed areas to find the annual volume of sediment yield from each area. The volumes for each watershed were summed to determine the total annual sediment yield draining into the sedimentation pond. The maximum calculated annual sediment yield for the area draining into the sedimentation pond is 4.22 acre-feet per year.

5.1. SEDIMENT POND CAPACITY

The sedimentation pond will retain runoff from a 10-year, 24-hour storm event from contributing watersheds (3.3 acre-feet) and one year of sediment yield (4.22 acre-feet), for a total of 7.52 acre-feet. The total designed capacity of the sedimentation pond is 10.01 acre-feet at the elevation of 7,841 feet.

6. CONCLUSIONS

Storm water discharge peak flows were estimated using SCS methodology and modeled via HEC-HMS version 3.3 for the 10-year 24-hour storm event. Proposed channels were sized for the design storm event using Bentley FlowMaster version V8i.

The sedimentation pond was designed according to Utah State Rule R645-301-742 and 743 to safely retain the 10-year 24-hour storm event and one year of predicted sediment yield. Riprap was sized to protect CC-1, DD-10 and UD-1 channels from potential erosion during the design storm event. The final proposed channel dimensions and riprap sizes are presented in Table 3 and Table 5. The detailed calculations are documented in Appendix A and Appendix B. Appendix C contains conveyance structure details.

APPENDIX A. HYDROLOGLY CALCULATIONS

A.1. HYDROLOGY PARAMETERS

Precipitation Frequency Data Server

NOAA Atlas 14, Volume 1, Version 5
Location name: Salina, Utah, US*
Coordinates: 38.9017, -111.5017
Elevation: 7965 ft*
* source: Google Maps

POINT PRECIPITATION FREQUENCY ESTIMATES

Sanja Perica, Sarah Dietz, Sarah Heim, Lillian Hiner, Kazungu Maitaria, Deborah Martin, Sandra Pavlovic, Ishani Roy, Carl Trypaluk, Dale Unruh, Fenglin Yan, Michael Yekta, Tan Zhao, Geoffrey Bonnin, Daniel Brewer, Li-Chuan Chen, Tye Parzybok, John Yarchoan

NOAA, National Weather Service, Silver Spring, Maryland

PF_tabular | PF_graphical | Maps_&_aerials

PF tabular

PDS-based point precipitation frequency estimates with 90% confidence intervals (in inches)[1]

Duration	Average recurrence interval (years)									
	1	2	5	10	25	50	100	200	500	1000
5-min	0.133 (0.117 0.154)	0.172 (0.151 0.199)	0.239 (0.208 0.274)	0.294 (0.254 0.340)	0.381 (0.321 0.440)	0.457 (0.378 0.531)	0.544 (0.440 0.636)	0.644 (0.508 0.761)	0.804 (0.605 0.971)	0.950 (0.690 1.17)
10-min	0.203 (0.178 0.234)	0.262 (0.230 0.303)	0.364 (0.317 0.417)	0.448 (0.386 0.518)	0.580 (0.488 0.670)	0.696 (0.575 0.808)	0.828 (0.670 0.968)	0.981 (0.773 1.16)	1.22 (0.920 1.46)	1.45 (1.05 1.78)
15-min	0.251 (0.220 0.290)	0.325 (0.286 0.376)	0.451 (0.392 0.517)	0.556 (0.479 0.642)	0.719 (0.606 0.830)	0.862 (0.713 1.00)	1.03 (0.830 1.20)	1.22 (0.958 1.44)	1.52 (1.14 1.83)	1.79 (1.30 2.21)
30-min	0.338 (0.297 0.390)	0.437 (0.385 0.506)	0.608 (0.528 0.696)	0.748 (0.645 0.864)	0.969 (0.816 1.12)	1.16 (0.960 1.35)	1.38 (1.12 1.61)	1.64 (1.29 1.93)	2.04 (1.54 2.47)	2.41 (1.75 2.97)
60-min	0.419 (0.367 0.483)	0.542 (0.476 0.626)	0.752 (0.654 0.862)	0.926 (0.799 1.07)	1.20 (1.01 1.38)	1.44 (1.19 1.67)	1.71 (1.38 2.00)	2.03 (1.60 2.39)	2.53 (1.90 3.05)	2.99 (2.17 3.68)
2-hr	0.516 (0.455 0.584)	0.653 (0.577 0.741)	0.874 (0.766 0.992)	1.07 (0.931 1.22)	1.38 (1.17 1.57)	1.65 (1.38 1.89)	1.96 (1.60 2.27)	2.33 (1.85 2.71)	2.90 (2.21 3.45)	3.43 (2.52 4.16)
3-hr	0.586 (0.530 0.657)	0.739 (0.667 0.830)	0.954 (0.859 1.07)	1.15 (1.02 1.29)	1.44 (1.27 1.63)	1.71 (1.47 1.93)	2.02 (1.71 2.31)	2.38 (1.97 2.74)	2.96 (2.37 3.49)	3.49 (2.71 4.18)
6-hr	0.754 (0.689 0.828)	0.938 (0.862 1.03)	1.16 (1.07 1.28)	1.36 (1.24 1.50)	1.64 (1.47 1.81)	1.88 (1.67 2.08)	2.17 (1.91 2.43)	2.51 (2.17 2.84)	3.10 (2.61 3.57)	3.63 (2.98 4.24)
12-hr	0.958 (0.880 1.04)	1.19 (1.09 1.29)	1.45 (1.33 1.59)	1.68 (1.53 1.84)	1.99 (1.80 2.19)	2.24 (2.01 2.47)	2.50 (2.22 2.77)	2.83 (2.48 3.17)	3.44 (2.96 3.90)	4.00 (3.40 4.59)
24-hr	1.09 (0.995 1.19)	1.35 (1.24 1.48)	1.67 (1.53 1.82)	1.92 (1.76 2.10)	2.29 (2.08 2.50)	2.57 (2.33 2.81)	2.86 (2.59 3.14)	3.16 (2.84 3.48)	3.58 (3.17 3.95)	4.04 (3.43 4.64)
2-day	1.28 (1.19 1.39)	1.59 (1.47 1.73)	1.96 (1.81 2.13)	2.27 (2.10 2.46)	2.71 (2.48 2.94)	3.06 (2.79 3.33)	3.43 (3.10 3.74)	3.81 (3.42 4.17)	4.36 (3.86 4.80)	4.79 (4.19 5.30)
3-day	1.42 (1.31 1.55)	1.76 (1.63 1.92)	2.17 (2.01 2.37)	2.52 (2.32 2.74)	3.02 (2.76 3.28)	3.42 (3.11 3.72)	3.84 (3.46 4.18)	4.28 (3.83 4.68)	4.90 (4.33 5.40)	5.40 (4.71 5.98)
4-day	1.56 (1.44 1.71)	1.94 (1.79 2.12)	2.39 (2.20 2.61)	2.78 (2.55 3.02)	3.33 (3.04 3.62)	3.77 (3.43 4.11)	4.24 (3.82 4.63)	4.74 (4.23 5.19)	5.45 (4.80 6.00)	6.02 (5.24 6.67)
7-day	1.91 (1.76 2.10)	2.38 (2.18 2.61)	2.93 (2.69 3.21)	3.38 (3.10 3.71)	4.00 (3.65 4.39)	4.49 (4.07 4.92)	5.00 (4.50 5.49)	5.52 (4.94 6.08)	6.23 (5.51 6.90)	6.79 (5.95 7.56)
10-day	2.23 (2.04 2.46)	2.78 (2.54 3.06)	3.42 (3.12 3.76)	3.93 (3.57 4.32)	4.62 (4.18 5.08)	5.15 (4.64 5.68)	5.70 (5.11 6.30)	6.25 (5.57 6.93)	6.99 (6.15 7.78)	7.56 (6.60 8.46)
20-day	3.06 (2.77 3.38)	3.80 (3.44 4.20)	4.66 (4.21 5.14)	5.32 (4.81 5.88)	6.19 (5.57 6.84)	6.84 (6.13 7.56)	7.49 (6.68 8.30)	8.13 (7.22 9.02)	8.97 (7.90 10.0)	9.60 (8.39 10.7)
30-day	3.78 (3.44 4.15)	4.69 (4.28 5.16)	5.72 (5.21 6.29)	6.51 (5.92 7.15)	7.55 (6.84 8.29)	8.31 (7.51 9.14)	9.07 (8.16 9.99)	9.82 (8.78 10.8)	10.8 (9.57 12.0)	11.5 (10.1 12.8)
45-day	4.78 (4.34 5.28)	5.94 (5.39 6.57)	7.23 (6.56 7.99)	8.22 (7.43 9.07)	9.48 (8.54 10.5)	10.4 (9.36 11.5)	11.3 (10.1 12.6)	12.2 (10.9 13.6)	13.4 (11.8 14.9)	14.3 (12.5 16.0)
60-day	5.68 (5.19 6.24)	7.09 (6.47 7.78)	8.62 (7.87 9.48)	9.77 (8.89 10.7)	11.2 (10.2 12.3)	12.3 (11.1 13.5)	13.3 (12.0 14.7)	14.3 (12.8 15.8)	15.6 (13.8 17.3)	16.5 (14.6 18.4)

[1] Precipitation frequency (PF) estimates in this table are based on frequency analysis of partial duration series (PDS).

Numbers in parenthesis are PF estimates at lower and upper bounds of the 90% confidence interval. The probability that precipitation frequency estimates (for a given

http://hdsc.nws.noaa.gov/hdsc/pfds/pfds_printpage.html?lat=38.9017&lon=-111.5017&data=depth&units=english&series=pds[1/7/2014 9:57:43 AM]

A.2. HEC-HMS CALCULATIONS

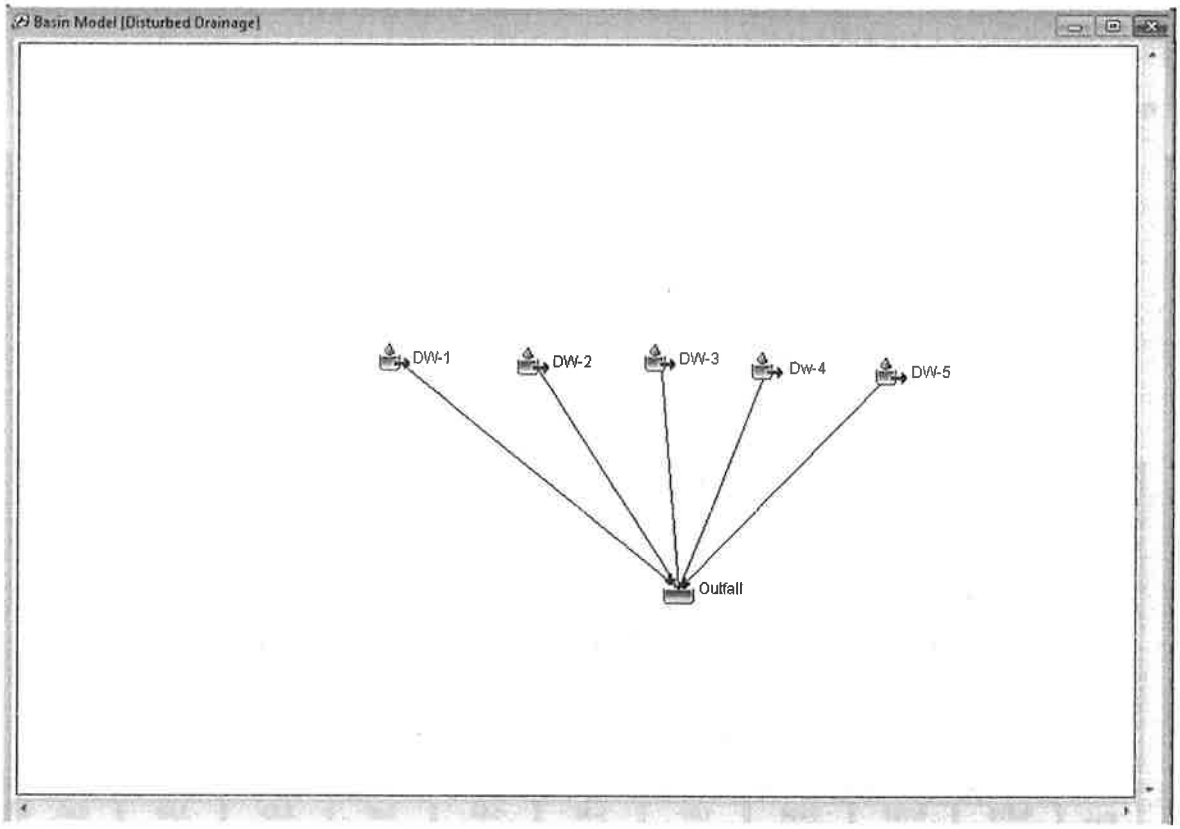

Table A 1. Global Summary Results for Disturbed Drainage, 10yr 24-hr Storm Event

Catchment	Area (MI2)	Peak Discharge (CFS)	Volume (AC-FT)
DW-1	0.049	37.5	2.7
DW-2	0.010	4.0	0.3
DW-3	0.002	0.8	0.1
DW-4	0.003	1.2	0.1
DW-5	0.002	1.9	0.2
Outfall*	0.066	45.4	3.3
*Outfall is total runoff flows and volumes from subareas			

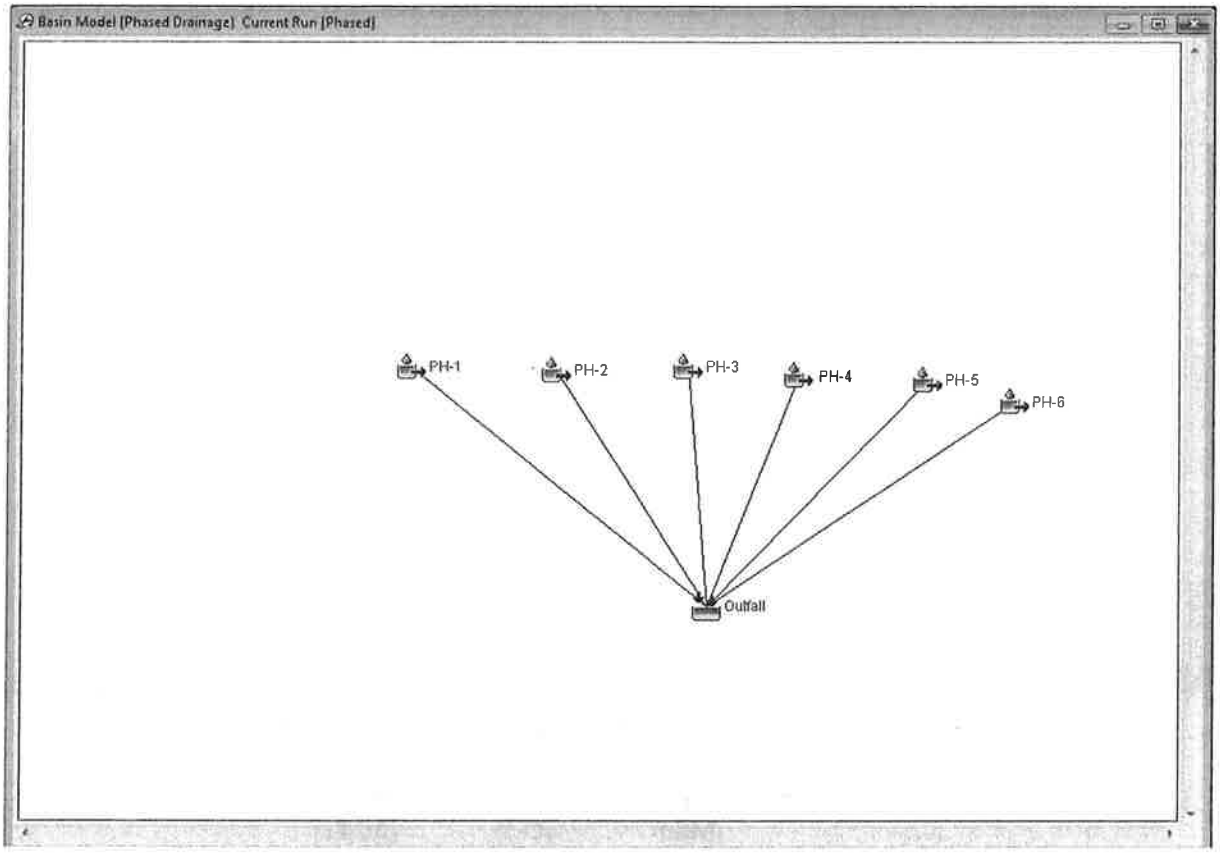

Table A 2. Global Summary Results for Phase Subbasins, 10yr 24-hr Storm Event

Catchment	Area (MI2)	Peak Discharge (CFS)	Volume (AC-FT)
PH-1	0.0096	8.28	0.54
PH-2	0.0066	7.27	0.37
PH-3	0.0068	7.49	0.38
PH-4	0.0072	7.93	0.40
PH-5	0.0066	7.27	0.37
PH-6	0.0014	1.54	0.08
Outfall*	0.0383	39.80	2.13

***Outfall is totol runoff flows and volumes from subareas**

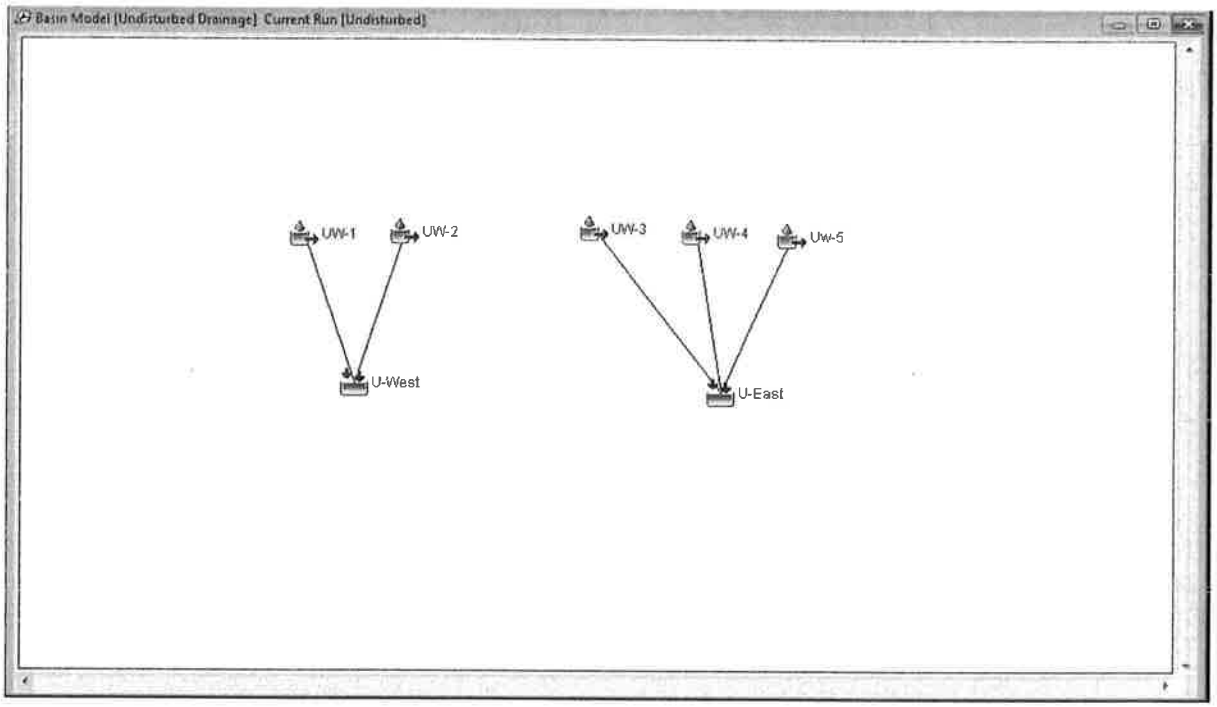

Table A 3. Global Summary Results for Undisturbed Drainage, 10yr 24-hr Storm Event

Catchment	Area (MI2)	Peak Discharge (CFS)	Volume (AC-FT)
UW-1	0.002	0.8	0.1
UW-2	0.012	0.2	0.1
U-West	0.014	1.0	0.1
UW-3	0.016	0.3	0.1
UW-4	0.113	1.8	0.7
UW-5	0.207	3.2	1.2
U-East	0.336	5.2	1.9

APPENDIX B. HYDRAULICS

B.1. CHANNEL SIZING

Cross Section for CC-1

Project Description

Friction Method	Manning Formula
Solve For	Normal Depth

Input Data

Roughness Coefficient	0.069	
Channel Slope	0.05800	ft/ft
Normal Depth	1.38	ft
Left Side Slope	2.00	ft/ft (H:V)
Right Side Slope	2.00	ft/ft (H:V)
Bottom Width	3.00	ft
Discharge	37.50	ft³/s

Cross Section Image

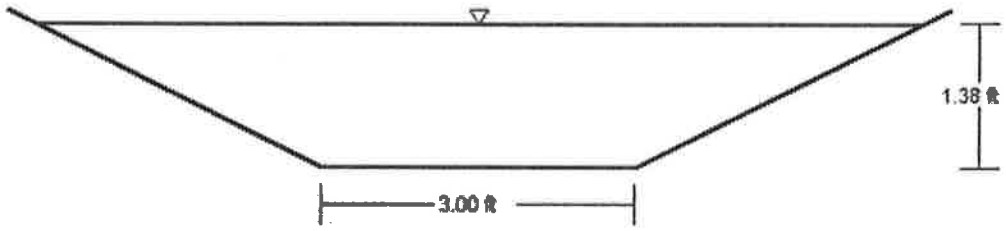

Cross Section for DD-10

Project Description

Friction Method	Manning Formula
Solve For	Normal Depth

Input Data

Roughness Coefficient	0.069	
Channel Slope	0.03600	ft/ft
Normal Depth	1.70	ft
Left Side Slope	2.00	ft/ft (H:V)
Right Side Slope	2.00	ft/ft (H:V)
Bottom Width	3.00	ft
Discharge	45.40	ft³/s

Cross Section Image

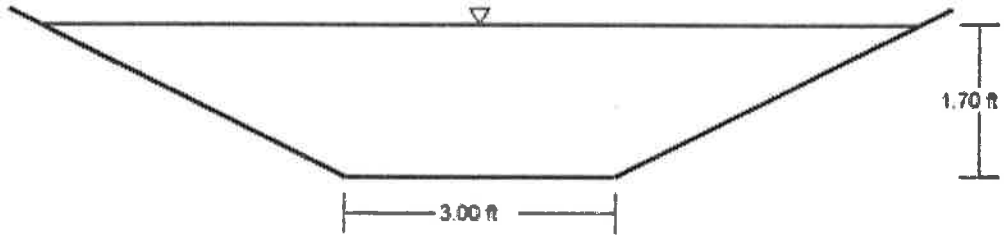

Cross Section for DD-1 - DD-9

Project Description

Friction Method	Manning Formula
Solve For	Normal Depth

Input Data

Roughness Coefficient	0.020	
Channel Slope	0.09000	ft/ft
Normal Depth	0.58	ft
Left Side Slope	2.00	ft/ft (H:V)
Right Side Slope	2.00	ft/ft (H:V)
Bottom Width	3.00	ft
Discharge	31.00	ft³/s

Cross Section Image

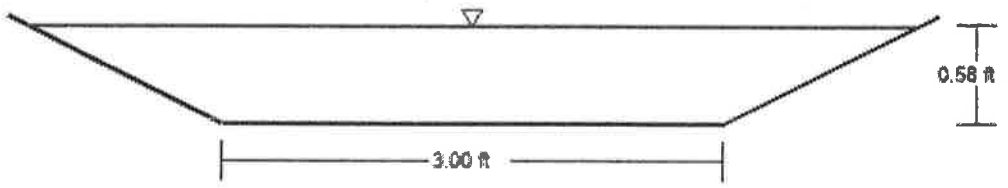

Cross Section for DB-1, DB-2

Project Description

Friction Method	Manning Formula
Solve For	Normal Depth

Input Data

Roughness Coefficient	0.035	
Channel Slope	0.03000	ft/ft
Normal Depth	0.75	ft
Left Side Slope	2.00	ft/ft (H:V)
Right Side Slope	2.00	ft/ft (H:V)
Bottom Width	0.00	ft
Discharge	4.00	ft^3/s

Cross Section Image

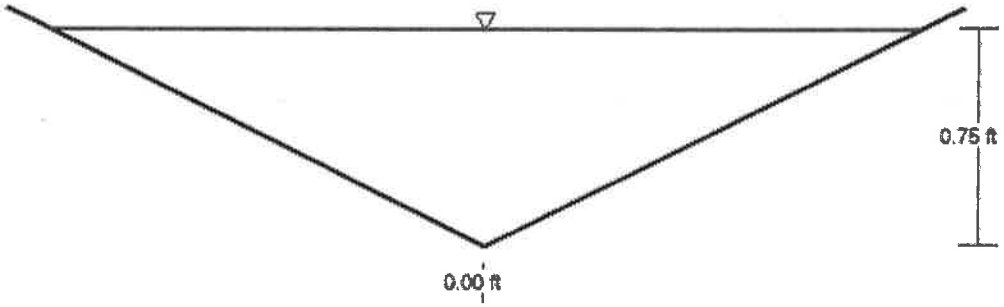

Cross Section for UB-1

Project Description

Friction Method	Manning Formula
Solve For	Normal Depth

Input Data

Roughness Coefficient	0.045	
Channel Slope	0.03600	ft/ft
Normal Depth	0.16	ft
Left Side Slope	62.00	ft/ft (H:V)
Right Side Slope	2.00	ft/ft (H:V)
Discharge	1.00	ft^3/s

Cross Section Image

Cross Section for UD-1

Project Description

Friction Method	Manning Formula
Solve For	Normal Depth

Input Data

Roughness Coefficient	0.060	
Channel Slope	0.10800	ft/ft
Normal Depth	0.13	ft
Left Side Slope	2.00	ft/ft (H:V)
Right Side Slope	2.00	ft/ft (H:V)
Bottom Width	1.00	ft
Discharge	0.30	ft³/s

Cross Section Image

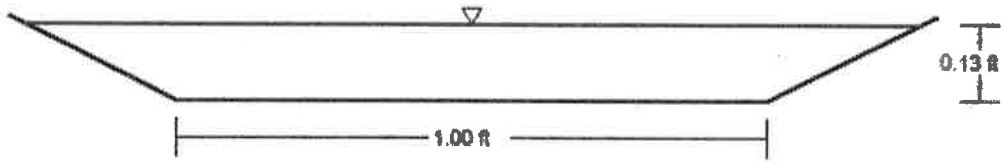

B.2. RIPRAP SIZING

Table B 1. Riprap Sizing for CC-1

Riprap Sizing Calculations
CC-1

22-Jan-15

Method	Estimated Riprap Size	
	d_{50} (ft)	d_{50} (in)
Maynord	0.35	4.20
USBR	0.45	5.41
Isbash	0.47	5.59
HEC-11	0.43	5.20
ASCE	0.48	5.71
Average Value	**0.44**	**5.22**

Modify Sheet as necessary

USER INPUT		
d (ft) =	1.4	average water depth in channel (ft)
V (ft/s) =	5.8	average channel velocity (fps)
r (ft) =	250.0	average bend radius (ft.)
w (ft.) =	5.0	average channel width (ft.)
g =	32.2	gravitational constant (ft./s^2)
θ =	26.6	angle of side slope to horizontal
Φ =	40.0	angle of repose for angular riprap
γ =	62.4	unit weight of water (lb./ft^3)
γ_s =	156.0	unit weight of stone (lb./ft^3)
Y_{max}	2.0	ft.
Q =	37.5	cfs
$Q_{channel}$ =	80.7	cfs
d_{50} =	0.8	inches existing channel
d_{50} =	21.2	mm

Table B 2. Riprap sizing for DD-5

Riprap Sizing Calculations
DD-10

22-Jan-15

Method	Estimated Riprap Size	
	d_{50} (ft.)	d_{50} (in)
Maynord	0.29	3.47
USBR	0.38	4.51
Isbash	0.39	4.68
HEC-11	0.32	3.87
ASCE	0.40	4.78
Average Value	**0.36**	**4.26**

Modify Sheet as necessary

USER INPUT		
d (ft.) =	1.5	average water depth in channel (ft.)
V (ft./s) =	5.3	average channel velocity (fps)
r (ft.) =	150.0	average bend radius (ft.)
w (ft.) =	5.0	average channel width (ft.)
g =	32.2	gravitational constant (ft./s^2)
θ =	26.6	angle of side slope to horizontal
Φ =	40.0	angle of repose for angular riprap
γ =	62.4	unit weight of water (lb./ft^3)
γ_s =	156.0	unit weight of stone (lb./ft^3)
Y_{max}	2.0	ft.
Q =	45.4	cfs
$Q_{channel}$ =	80.7	cfs
d_{50} =	0.8	inches existing channel
d_{50} =	21.2	mm

Table B 3. Riprap sizing for UD-1

Riprap Sizing Calculations
UD-1

22-Jan-15

Method	Estimated Riprap Size	
	d_{50} (ft.)	d_{50} (in)
Maynord	0.06	0.78
USBR	0.07	0.87
Isbash	0.08	0.95
HEC-11	0.10	1.19
ASCE	0.08	0.97
Average Value	**0.08**	**0.95**

Modify Sheet as necessary

USER INPUT		
d (ft.) =	0.1	average water depth in channel (ft.)
V (ft./s) =	2.4	average channel velocity (fps)
r (ft.) =	150.0	average bend radius (ft.)
w (ft.) =	1.5	average channel width (ft.)
g =	32.2	gravitational constant (ft./s^2)
θ =	26.6	angle of side slope to horizontal
Φ =	40.0	angle of repose for angular riprap
γ =	62.4	unit weight of water (lb./ft^3)
γ_s =	156.0	unit weight of stone (lb./ft^3)
Y_{max}	1.0	ft.
Q =	0.3	cfs
$Q_{channel}$ =	24.5	cfs
d_{50} =	0.8	inches existing channel
d_{50} =	21.2	mm

Cross Section for DC-1, DC-2

Project Description

Friction Method	Manning Formula
Solve For	Normal Depth

Input Data

Roughness Coefficient	0.024	
Channel Slope	0.05800	ft/ft
Normal Depth	1.54	ft
Diameter	2.50	ft
Discharge	37.50	ft³/s

Cross Section Image

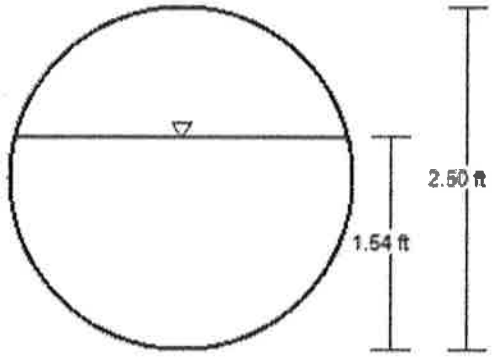

Cross Section for DC-3

Project Description

Friction Method	Manning Formula
Solve For	Normal Depth

Input Data

Roughness Coefficient	0.012	
Channel Slope	0.30000	ft/ft
Normal Depth	0.29	ft
Diameter	1.00	ft
Discharge	4.00	ft³/s

Cross Section Image

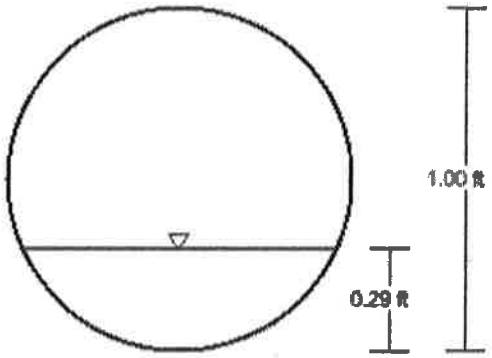

V: 1
H: 1

Cross Section for UC-3

Project Description

Friction Method	Manning Formula
Solve For	Normal Depth

Input Data

Roughness Coefficient	0.012	
Channel Slope	0.06000	ft/ft
Normal Depth	0.40	ft
Diameter	2.00	ft
Discharge	5.20	ft³/s

Cross Section Image

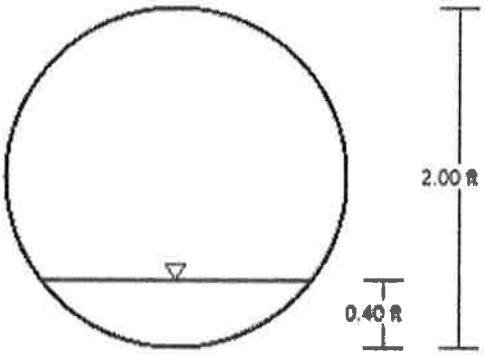

Cross Section for UC-4

Project Description

Friction Method	Manning Formula
Solve For	Normal Depth

Input Data

Roughness Coefficient	0.012	
Channel Slope	0.05000	ft/ft
Normal Depth	1.15	ft
Diameter	3.00	ft
Discharge	50.60	ft³/s

Cross Section Image

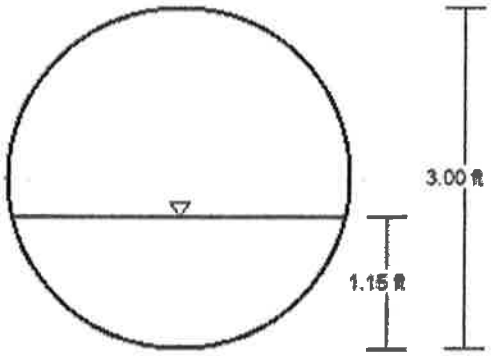

V: 1

APPENDIX C. CONVEYANCE STRUCTURES DETAILS

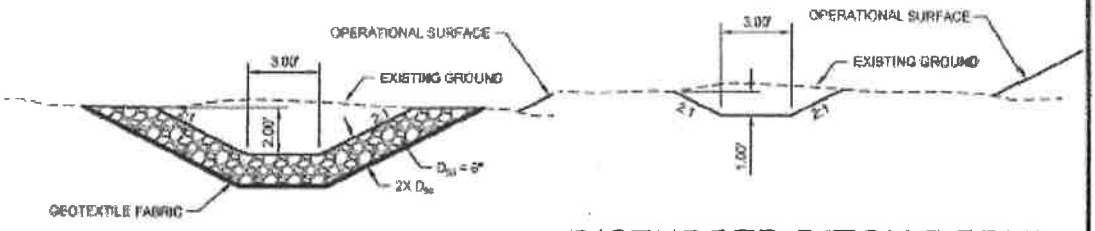

DISTURBED DITCH RIPRAP DETAIL

USE ON DITCHES DC-1 & DD-10

DISTURBED DITCH DETAIL

USE ON DITCHES DD-1, DD-2, DD-3, DD-4, DD-5, DD-6, DD-7, DD-8 & DD-9

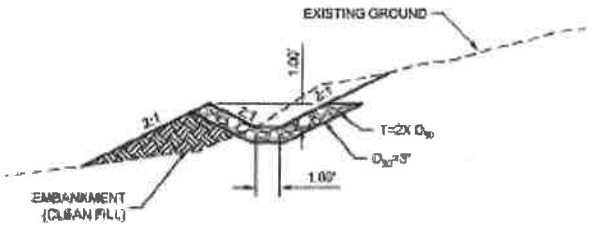

UNDISTURBED DITCH DETAIL

USE ON DITCH UD-1

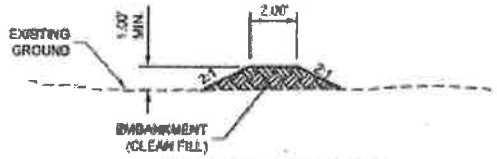

UNDISTURBED BERM DETAIL

USE ON BERMS UB-1

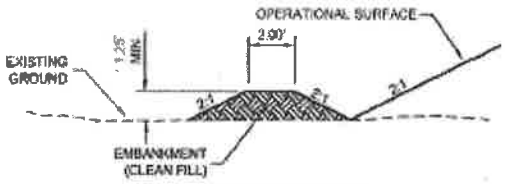

DISTURBED BERM DETAIL

USE ON BERMS DB-1 & DB-2

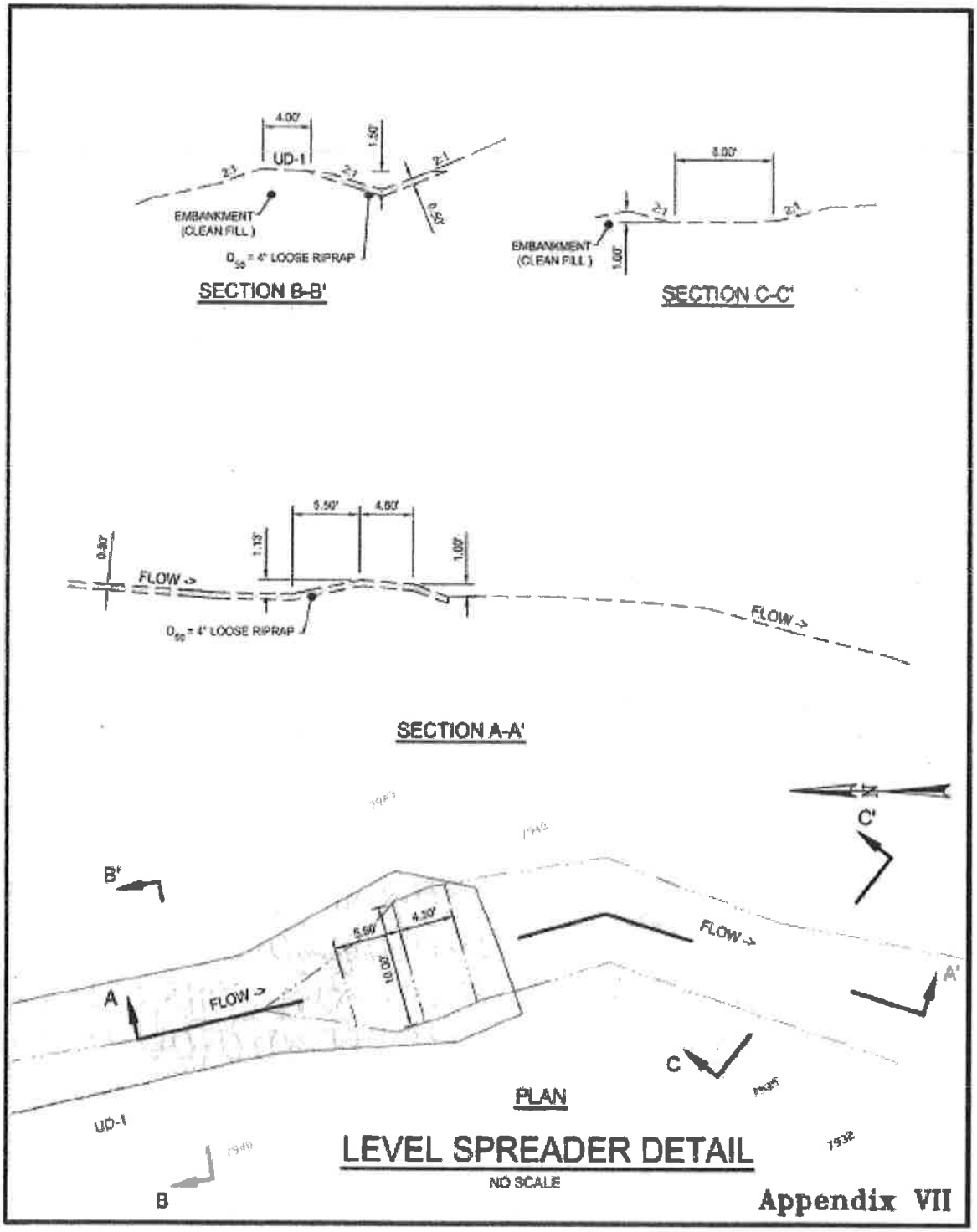
4.00'
UD-1
1.50'
2:1
2:1
2:1
0.50'
EMBANKMENT
(CLEAN FILL)
D_{50} = 4" LOOSE RIPRAP
SECTION B-B'
8.00'
2:1
2:1
EMBANKMENT
(CLEAN FILL)
1.00'
SECTION C-C'
0.50'
FLOW ->
1.13'
5.50'
4.50'
1.00'
D_{50} = 4" LOOSE RIPRAP
FLOW ->
SECTION A-A'
C'
B'
A
FLOW ->
5.50'
4.50'
10.00'
FLOW ->
A'
C
PLAN
UD-1
B
LEVEL SPREADER DETAIL
NO SCALE
Appendix VII

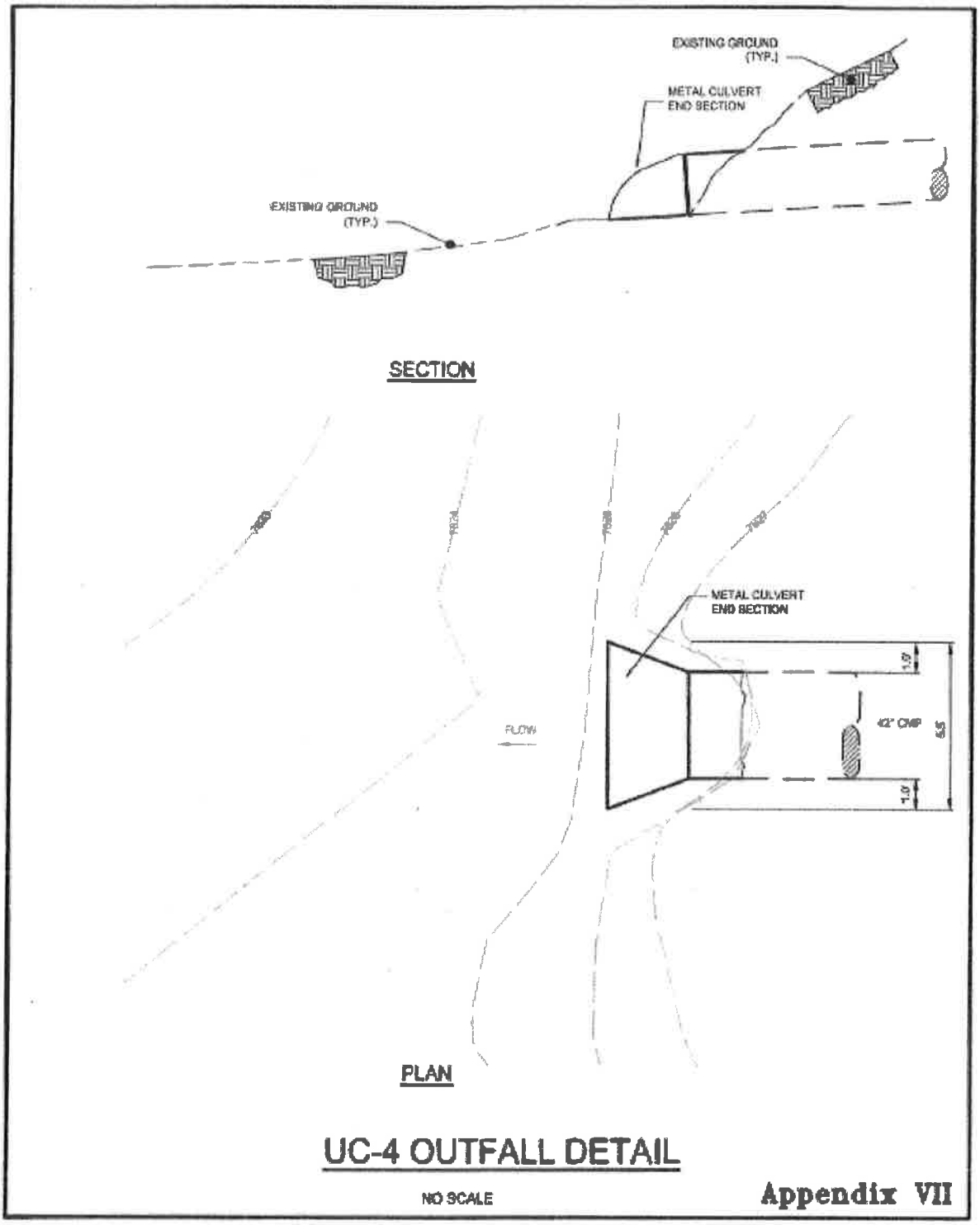

UC-4 OUTFALL DETAIL

NO SCALE

Appendix VII

LEGEND

- 8140 — EXISTING GROUND MAJOR CONTOUR (10 FOOT)
- EXISTING GROUND MINOR CONTOUR (2 FOOT)
- DISTURBED/UNDISTURBED AREA BERM (DB-_/UB-_)
- UNDISTURBED AREA DITCH (UD-_)
- DISTURBED AREA DITCH (DD-_)
- UNDISTURBED AREA CULVERT (UC-_)
- DISTURBED AREA CULVERT (DC-_)
- UNDISTURBED AREA CATCH BASIN (UCB-_)
- EXISTING CULVERT
- PROPOSED OPERATIONAL ROAD
- PROPOSED ANCILLARY ROAD
- EXISTING ROAD
- EXISTING PAVED ROAD
- DISTURBED AREA BOUNDARY
- PROPERTY BOUNDARY
- EXISTING TREELINE
- DRAINAGE FLOW DIRECTION
- EXISTING SIGN
- EXISTING FENCE LINE

NOTES:
1. SEE MAP 5 FOR LARGER WATERSHEDS.
2. SEE APPENDIX VII FOR BERM, DITCH, AND CULVERT DETAILS.

REVISIONS				
NO.	DATE	REQ. BY	DWG. BY	REMARKS
1	8/6/2014	VM	JA	PLATE UPDATES
2	9/4/2014	VM	JA	PLATE UPDATES
3	8/13/2016	VM	JA	PLATE UPDATES
4	1/26/2017	BB	JA	PLATE UPDATES

Canyon Fuel Company, LLC
SUFCO Mine
597 South SR 24 – Salina, UT 84654
(435) 286-4880 Phone
(435) 286-4499 Fax

WASTE ROCK PILE
OPERATIONAL HYDROLOGY PLAN

RECEIVED
FEB 13 2017
DIV. OF OIL, GAS & MINING

PEN TBL:	SCALE:	DATE:	DRAWN BY:	ENGINEER:	CHECKED BY:	SHEET NO.
_1Stndrd-HPT1100.ctb	1" = 100'	1/26/2017	JA	LF / TH	VM	MAP 5A
SHT SET: 1406-120	PROJECT NUMBER: 1406-120	FILE NAME: H:\JD\Proj\1406-120\DWG\SHEET 6 OPERATIONAL HYDROLOGY.dwg				

User: 2/9/2017 9:15 AM