C/041/002 Incoming

#5397

Canyon Fuel Company, LLC
A Subsidiary of Bowie Resource Holdings, LLC

Sufco Mine
John D. Byars
General Manager
597 South SR24
Salina, Utah 84654
(435) 286-4400
Fax (435) 286-4499

March 6, 2017

Permit Supervisor, Utah Coal Regulatory Program
Utah Division of Oil, Gas and Mining
1594 West North Temple, Suite 1210
PO Box 145801
Salt Lake City, UT 84114-5801

Re: Amendment to MRP to Address the Mitigation and Bond for 2RWL Sinkhole Mitigation, Task ID# 5313, Sufco Mine, Canyon Fuel Company, LLC, Permit Number C/041/0002

Dear Sirs:

Please find enclosed with this letter an amendment to the Sufco Mine Permit to address modifications to the permit to address the mitigation and reclamation of the 2RWL sinkhole in the SW1/4 NE1/4, Section 2, Township 22S, Range 4 E.

The bond calculations will follow in a separate amendment dedicated specifically to bond revisions for various facilities at Sufco. The bond for the sinkhole will provided for the reseeding of the site should the current seeding fail.

Appendix 5-13 has been added to the submittal which contains the mitigation plan and various surveys and drawings associated with the sinkhole. Revisions to text have been made in Chapters 2,3,4,5 and 7.

The sinkhole has been located on the included Plate 5-6, other permitting drawings will be updated to include the sinkhole when the next major amendment is submitted. Greens Hollow permitting will require the submittal of the majority of the drawings within the permit. These drawings will show the location of the sinkhole where applicable.

If you have questions or need addition information please contact Vicky Miller at (435)286-4481.

CANYON FUEL COMPANY, SUFCO Mine

Vicky L Miller for

John Byars
General Manager

RECEIVED
MAR 09 2017
DIV. OF OIL, GAS & MINING

Encl.

cc: DOGM Correspondence File

APPLICATION FOR COAL PERMIT PROCESSING

Permit Change ☒ New Permit ☐ Renewal ☐ Exploration ☐ Bond Release ☐ Transfer ☐

Permittee: Canyon Fuel Company, LLC
Mine: Sufco Mine **Permit Number:** C/041/0002
Title: Amendment to MRP to Address the Mitigation and Repair of the 2RWL Sinkhole, Task ID# 5313
Description, Include reason for application and timing required to implement:

Instructions: If you answer yes to any of the first eight (gray) questions, this application may require Public Notice publication.

☒ Yes ☒ No 1. Change in the size of the Permit Area? Acres: 0.45 Disturbed Area: 0.351 ☒ increase ☐ decrease.
☐ Yes ☒ No 2. Is the application submitted as a result of a Division Order? DO# _____
☐ Yes ☒ No 3. Does the application include operations outside a previously identified Cumulative Hydrologic Impact Area?
☐ Yes ☒ No 4. Does the application include operations in hydrologic basins other than as currently approved?
☐ Yes ☒ No 5. Does the application result from cancellation, reduction or increase of insurance or reclamation bond?
☐ Yes ☒ No 6. Does the application require or include public notice publication?
☐ Yes ☒ No 7. Does the application require or include ownership, control, right-of-entry, or compliance information?
☐ Yes ☒ No 8. Is proposed activity within 100 feet of a public road or cemetery or 300 feet of an occupied dwelling?
☐ Yes ☒ No 9. Is the application submitted as a result of a Violation? NOV # _____
☐ Yes ☒ No 10. Is the application submitted as a result of other laws or regulations or policies?
Explain: _____
☐ Yes ☒ No 11. Does the application affect the surface landowner or change the post mining land use?
☐ Yes ☒ No 12. Does the application require or include underground design or mine sequence and timing? (Modification of R2P2)
☒ Yes ☐ No 13. Does the application require or include collection and reporting of any baseline information?
☒ Yes ☐ No 14. Could the application have any effect on wildlife or vegetation outside the current disturbed area?
☒ Yes ☐ No 15. Does the application require or include soil removal, storage or placement?
☒ Yes ☐ No 16. Does the application require or include vegetation monitoring, removal or revegetation activities?
☐ Yes ☒ No 17. Does the application require or include construction, modification, or removal of surface facilities?
☐ Yes ☒ No 18. Does the application require or include water monitoring, sediment or drainage control measures?
☐ Yes ☒ No 19. Does the application require or include certified designs, maps or calculation?
☐ Yes ☒ No 20. Does the application require or include subsidence control or monitoring?
☒ Yes ☐ No 21. Have reclamation costs for bonding been provided?
☐ Yes ☒ No 22. Does the application involve a perennial stream, a stream buffer zone or discharges to a stream?
☐ Yes ☒ No 23. Does the application affect permits issued by other agencies or permits issued to other entities?

Please attach four (4) review copies of the application. If the mine is on or adjacent to Forest Service land please submit five (5) copies, thank you. (These numbers include a copy for the Price Field Office)

I hereby certify that I am a responsible official of the applicant and that the information contained in this application is true and correct to the best of my information and belief in all respects with the laws of Utah in reference to commitments, undertakings, and obligations, herein.

Jacob D. Smith
Print Name

Eng. Mgr., 3/6/17
Sign Name, Position, Date

Subscribed and sworn to before me this 6 day of March, 2017

Jacquelyn Nebeker
Notary Public

My commission Expires: _____, 20____}
Attest: State of _____} } ss:
County of _____

JACQUELYN NEBEKER
Notary Public
State of Utah
My Commission Expires 03/24/2019
COMMISSION NUMBER 681827

For Office Use Only:	Assigned Tracking Number:	Received by Oil, Gas & Mining
		RECEIVED MAR 09 2017 DIV. OF OIL, GAS & MINING

Form DOGM- C1 (Revised March 12, 2002)

APPLICATION FOR COAL PERMIT PROCESSING
Detailed Schedule Of Changes to the Mining And Reclamation Plan

Permittee: Canyon Fuel Company, LLC
Mine: Sufco Mine **Permit Number:** C/041/002
Title: Amendment to MRP toAddress the Mitigation and Repair of the 2RWL Sinkhole, Task ID# 5313

Provide a detailed listing of all changes to the Mining and Reclamation Plan, which is required as a result of this proposed permit application. Individually list all maps and drawings that are added, replaced, or removed from the plan. Include changes to the table of contents, section of the plan, or other information as needed to specifically locate, identify and revise the existing Mining and Reclamation Plan. Include page, section and drawing number as part of the description.

			DESCRIPTION OF MAP, TEXT, OR MATERIAL TO BE CHANGED
☐ Add	☒ Replace	☐ Remove	M&RP - Chapter 1, Pages 1-14 & 1-16
☐ Add	☒ Replace	☐ Remove	Chapter 2, Pages2-18 thru 2-20
☒ Add	☒ Replace	☐ Remove	Chapter 3, Pages 3-ii, 3-iii, 3-64thru 3-12, 3-14, 3-14A, 3-27, 3-34, 3-35, 3-49 thru 3-60
☐ Add	☐ Replace	☐ Remove	Excerpt from Vegetation Report located in Volume 3, Appendix IVA
☒ Add	☐ Replace	☐ Remove	Appendix 3-13, add to the back of existing information
☐ Add	☒ Replace	☐ Remove	Chapter 4, Pages 4-7 thru 4-12
☐ Add	☒ Replace	☐ Remove	Chapter 5, Pages 5-vii, 5-9, 5-14, 5-15, 5-23, 5-65
☒ Add	☐ Replace	☐ Remove	Appendix 5-13 - 2RWL Sinkhole
☐ Add	☒ Replace	☐ Remove	Plate 5-6
☐ Add	☒ Replace	☐ Remove	Chapter 7, Page 7-3
☐ Add	☐ Replace	☐ Remove	
☐ Add	☐ Replace	☐ Remove	
☐ Add	☐ Replace	☐ Remove	
☐ Add	☐ Replace	☐ Remove	
☐ Add	☐ Replace	☐ Remove	
☐ Add	☐ Replace	☐ Remove	
☐ Add	☐ Replace	☐ Remove	
☐ Add	☐ Replace	☐ Remove	
☐ Add	☐ Replace	☐ Remove	CONFIDENTIAL
☒ Add	☐ Replace	☐ Remove	Appendix 4-2 Cultural Resource Review Sinkhole
☐ Add	☐ Replace	☐ Remove	
☐ Add	☐ Replace	☐ Remove	
☐ Add	☐ Replace	☐ Remove	
☐ Add	☐ Replace	☐ Remove	
☐ Add	☐ Replace	☐ Remove	
☐ Add	☐ Replace	☐ Remove	
☐ Add	☐ Replace	☐ Remove	

Any other specific or special instruction required for insertion of this proposal into the Mining and Reclamation Plan.

March 6, 2017

Received by Oil, Gas & Mining

RECEIVED
MAR 09
DIV. OF OIL, GAS & MINING

Form DOGM - C2 (Revised March 12, 2002)

CHAPTER 1

GENERAL CONTENTS

Service approval to conduct coal mining and reclamation operations within 100 feet of the Link Canyon forest service road is located in Appendix 1-1 and the newspaper advertisement for public comment is located in Appendix 1-3.

116 Permit Term

The following information is presented to identify permit term requirements and stipulations. Canyon Fuel Company will be operating the SUFCO Mine with continuous miner and longwall mining methods. The estimated number of total surface acres to be affected over the entire mining operation is ~~48.432~~ 96.42 acres +/- .

PERMITTED DISTURBED AREA BOUNDARY	ACTUAL AREA CURRENTLY DISTURBED TO BE RECLAIMED	SITE DESCRIPTION
30.210	17.405	Mine Site, East Spring Canyon
0.967	0.39	Spring Collection Field, Convulsion Cyn. ~~Canyon~~
0.220	0.075	Pump House, Convulsion Canyon
0.784	0.40	Leach Field, Convulsion Canyon
1.595	0.193	Water Tank, East Spring Canyon
0.286	0.017	3 East Portals
1.774	0.70	4 East Portals
0.302	0.017	South Portals
0.396	0.017	Quitchupah Portals
0.287	0.18	Link Canyon Substation No. 1
0.245	0.12	Link Canyon Substation No. 2
0.380	0.18	Link Canyon Portal
0.45	0.351	Sinkhole
~~10.986~~ 58.52	~~8.733~~ 28.78	Waste Rock Disposal Site*
~~0.000~~	~~0.00~~	~~North Water Mitigation Area~~
~~0.000~~	~~0.00~~	~~Quitchupah Fan and Shaft Site~~
~~48.432~~ 96.416	~~28.427~~ 48.825	Totals Acres +/-

*Includes acreage from pre-expansion disturbance and Phase 1 and 2 construction disturbance

Section 12: A Portion of the following:
W1/2SW1/4
Section 14: A Portion of the following:
W1/2NE1/4, NE1/4NW1/4

~~Quitchupah Fan and Shaft Site (Approximately 68.640 acres)~~
~~T. 21 S., R. 5 E., SLBM, Utah~~
~~Section 18: A Portion of the following:~~
~~S1/2~~
~~Section 19: A Portion of the following:~~
~~NW1/4NE1/4NE1/4~~
Sinkhole (Approximately 0.45 acres +/-)
T.22. S., R.4.E.
Section 2 Portion of the SW1/4NE1/4

PERMITTED AREA BOUNDARIES	SITE DESCRIPTION
64.40	SUFCO Main Facilities Complex
0.286	3 East Portals
1.774	4 East Portals
0.396	Quitchupah Portals
0.287	Link Canyon Substation No. 1
0.245	Link Canyon Substation No. 2
0.380	Link Canyon Portal
81.25	Waste Rock Disposal Site
542.26	North Water Mitigation Area
0.45	Sinkhole
691.728 acres +/-	TOTAL

The permit area boundary, which is shown on Plate 5-6, includes portions of Federal coal leases, fee coal leases, the waste rock disposal site and U.S. Forest Service special use permit areas for a total of ~~720.483~~ 691.728acres +/-.

117 Insurance and Proof of Publication

Certificates of Insurance issued to Canyon Fuel Company, LLC are located in the General Chapter 1 binder as prepared for the ~~Dugout Canyon Mine, Soldier Canyon Mine, SUFCO Mine, Skyline Mines and Banning Loadout~~ operations and ~~in Appendix 8-1.~~ on file with the Division.

CHAPTER 2

SOILS

Total 309 cy + 1,541 cy = 1,850 cy

A site specific soil survey will be completed for the Overflow Pond prior to disturbance and this information will be utilized in determining topsoil salvage depth. During topsoil removal observations and measurements in the field will be conducted by the site construction supervisor or a trained representative. Actual volume of topsoil removed and stockpiled for the Overflow Pond was 1,488 cubic yards.

During the topsoil removal operation for the temporary access road for the construction of the bypass culvert portion of the overflow pond, the total depth of soil removal will be based upon the color change between the upper most and underlying layer and the use of a tape measure. For calculation purposes, the upper layer of soils was assumed to average 12-inches. Therefore, the total material removed prior to excavating the bypass culvert trench is:

13000 sq ft X 1.0 ft = 13000 cubic feet or approximately 482 cubic yards.

The 482 yards of salvaged soils will be removed and placed adjacent to the new bypass culvert trench location. The remaining material, C2 horizon, will be excavated from the trench and temporarily stored adjacent to the excavation but not mixed with the 482 cubic yards of salvaged soil. After the culvert is placed, the excavated C2 material will be replaced in the trench and any remaining material will be evenly spread over the disturbed trench area. The salvaged 482 cubic yards of soils will then be spread over the disturbed area. The surface will be left in a roughened state to reduce erosion. Reseeding of the area followed the completion of construction in 2010.

2RWL Sinkhole - In October 2016 a sinkhole in the SW1/4 NE1/4 of Section 2, Township 22 South, Range 4 East was reshaped. Temporary access to the hole was made from FR007 to the hole, topsoil was removed from the perimeter of the existing hole and stockpiled for immediate replacement. Approximately 1,000 cubic yards was stockpiled, with the depth of topsoil on the perimeter ranging from 8 to 30 inches. The hole was graded to approximately 2.5:1 slopes thus reducing the depth of the hole from approximately 40' to 26'. Approximately 6 - 8" of topsoil was replaced over the sinkhole area, the area was pocked with a bucket approximately 42" in width. The access corridor, sinkhole and immediate areas were seeded. For additional information refer to Sections 3.2.2.2, 5.2.1.1 and 5.4.1.1. The sinkhole is located within the area of the West Lease Modifications permitted in 2011.

2.3.1.2 Suitability of Topsoil Substitutes/Supplements

See Section 2.3.3.2

2.3.1.3 Testing of Topsoil Handling and Reclamation Procedures Regarding Revegetation

The Applicant will exercise care to guard against erosion during and after application of topsoil and will employ the necessary measures to ensure the stability of topsoil on graded slopes. Erosion control measures will include surface roughing and erosion mat placement on slope areas thought to be unstable. The Applicant will fill, regrade, or otherwise stabilize any rills or gullies deeper than nine (9) inches which form in areas which have been regraded and topsoiled. The areas adjacent to any rills or gullies which have been filled, regraded or otherwise stabilized, will be reseeded or stabilized accordingly.

Methods used to evaluate success of revegetation and stabilization appear in page 37 of Appendix 2-2. Erosion monitor pins will be placed on the slopes at the time of reseeding. Locations of the erosion pins will be obtained via a random number generator. The pin locations will be surveyed and revegetation analyses conducted annually following completion of reseeding, until the release of the bond.

2.3.1.4 Construction, Modification, Use, and Maintenance of Topsoil Storage Piles

The topsoil storage piles (Plate 2-1) at the SUFCO Mine in East Spring Canyon area consist of small amounts of topsoil, from the substation pad (27 cubic yards) and the area where the sediment pond (1,200 cubic yards) was constructed. The topsoil materials were segregated and stockpiled. The stockpiled materials were selectively placed in small area exemption areas within the permit area on stable surface areas below the sediment pond (0.105 acres) and on the south end of the substation pad (0.02 acre). The topsoil small area exemption stockpiles are isolated with no means of access from the main surface area to protect the topsoil from contaminants and unnecessary compaction that would interfere with vegetation. A topsoil storage sign was installed at the base of each stockpile. The stockpiles were protected from wind and water erosion by being revegetated with a quick growing vegetative cover (proposed seed mix minus the shrubs and trees) and by installing silt fence below the stockpiles to help trap sediment coming off the stockpile. This topsoil will not be moved or disturbed until required for redistribution during final reclamation.

Topsoil from the Overflow Pond will be placed in a topsoil pile located southwest of the overflow pond area. This storage area will be protected with berms and/or silt fences, a three-strand barbwire fence, and revegetated with a quick growing vegetative cover (standard seed mix in section 3.4.1.2 minus the shrubs and trees) to control erosion. The surface of the topsoil pile will be pitted to reduce runoff and erosion. This soil will not be moved or disturbed until it is required for redistribution during final reclamation. A figure of the surveyed topsoil stockpile and estimated

quantity of soil stored in the pile is included in Appendix 2-2. Plate 5-2B shows the as-built features associated with the overflow pond.

Topsoil from the Link Canyon Substation No. 1 will be placed and stored on the outslope of the pad. This storage area will be protected with berms and/or silt fences, a three-strand barbwire fence, and revegetated to control erosion. This soil will not be moved or disturbed until it is required for redistribution during final reclamation.

Soil from the Link Canyon Substation No. 2 will be placed in a soil stock pile located at the south end of the pad area. The storage area will be protected with berms and/or silt fences, a three strand barbwire fence, and revegetated to control erosion. This soil will not be moved or disturbed until it is required for redistribution during final reclamation.

Soil from the Link Canyon Mine Portal area will be placed in a topsoil pile located south of the disturbed portal pad area out of the floodplain (Plate 5-2F). The storage area will be protected by installing a topsoil storage sign at the base of the pile, berms and/or silt fences, a three strand barbwire fence, and protected from wind and water erosion by surface pitting the stockpile to retain moisture and reduce erosion and by being revegetated with a quick growing vegetative cover (standard seed mix in section 3.4.1.2 minus the shrubs and trees) to control erosion. This soil will not be moved or disturbed until it is required for redistribution during final reclamation. The surface of the topsoil pile will be pitted to reduce runoff and erosion. Vegetation removed during site construction, such as sage brush and other woody plants, will be placed on top of the pile.

Excess subsoil associated with construction of a run of mine coal stockpile and the West Lease portal tunnel development is stored at SUFCO Mine's waste rock disposal site. At the mine site the substation binwall has approximately 2,160 cubic yards of subsoil material and 5,300 cubic yards of road base, with the additional 11,341 cubic yards of subsoil material (Soil Nail Wall/West Lease/run of mine stockpile) being stored at the waste rock site there is a total of 18,801 cubic yards (approximate) that will be available for use as subsoil material during final reclamation of the mine site facilities. Reference Appendix 2-3 for the analyses of the subsoil being stored at the waste rock site to be used during reclamation of the mine site.

Approximately 81 cyds of subsoil was removed during the stabilization construction of a soil nail wall located behind the Warehouse Annex Building.

CHAPTER 3

BIOLOGY

TABLE OF CONTENTS

Section Page

TABLE OF CONTENTS

through 3.2.2.3 and in the "Muddy Creek Summary Report - Wildlife" prepared by Cirrus and included as Appendix 3-11. Fish and wildlife resources within the West Coal Lease Modifications and the area of the 2016 sinkhole repair are summarized in Appendix 3-13 and Section 3.2.2.2. A description of the potential impacts and mitigation of impacts of mining on fish and wildlife is included in Section 3.3.3.3 of this permit.

Due to either their small size, intermittent flows, poor habitat or water quality, the surface waters in the lease area are not of game fish quality. The low importance of the streams as a fishery resource, has categorized them as being of little value for extensive study. An inventory of the aquatic resources is located in Appendix 3-2. Aquatic resources of the Pines Tract Project are briefly described in the wildlife section of Appendix 3-9. Aquatic resources within the Muddy Tract are summarized in Appendix 3-11. Aquatic resources within the West Coal Lease Modifications and the area of the 2016 2RWL sinkhole repair are summarized in Appendix 3-13.

3.2.2.1 Level of Detail

The scope and level of detail within this M&RP are sufficient to design the protection and enhancement plan for wildlife and fish in the area.

This assessment of wildlife resources has been compiled pursuant to guidelines issued by the State of Utah Division of Oil, Gas and Mining (UDOGM). Appendices 3-3, 3-4, 3-5, and 3-9 contain wildlife studies related to their resources in the mine area.

3.2.2.2 Site-specific Resource Information

The following information was summarized from the WIL, RAP, AQU, and VWP Reports. Additional information is available in Appendix 3-2 through 3-5, and 3-9.

Reptiles and Amphibians

Increasing elevation rapidly reduces the number and kind of reptiles and amphibians. Furthermore, in Utah the effects of the more northern latitude reduces the number of reptiles in much the same way as does the increase in elevation.

These geographical and associated climatic factors have eliminated most desert species, leaving species that are adapted either to mountain habitats or montane type habitats developed in the more northern areas.

Literature pertaining to the amphibians and reptiles is extensive; but, much of it refers to species occurring in the desert areas and has only limited reference to forms inhabiting Utah mountains.

Based on the extensive literature review and limited field work it was determined that potentially 8 species of amphibians (Appendix 3-5) inhabit the area of concern which provides substantial value habitat . All amphibians are legally protected, but since the species listed are all widespread throughout the mountains of Utah, none are treated as high-interest species. It is doubtful that the proposed action would seriously impact populations, but localized individuals may be involve in habitat destruction due to subsidence. An exception to this would be if subsidence interrupted underground aquifers and caused drying of present wet habitats essential to reproduction.

Based on the literature search and limited field work, it was determined that potentially 14 species of reptiles (Appendix 3-5) occupy the mine land area, a substantial value habitat for all species. All reptiles are legally protected but since the species listed are all widespread throughout montane habitats in Utah, none are treated as high-interest species and, therefore, are not individually discussed. It is doubtful that the proposed action would seriously impact populations.

Information about reptiles and amphibians specific to the Pines Tract Project area is provided in the VWP report (Appendix 3-9). Information about reptiles and amphibians specific to the Muddy Tract area is provided in the Cirrus report (Appendix 3-11). Information about reptiles and amphibians specific to the West Coal Lease Modifications and the area of the 2016 2RWL sinkhole repair are summarized in Appendix 3-13.

Wetlands and riparian areas exist within the permit area and have been estimated to represent less than one percent of the total acreage within Pines Tract Project Area and SITLA Muddy Tract. These areas are supported by streams, springs, and seeps located throughout the drainages. Studies in the semi-arid West comparing riparian areas with adjacent uplands showed that riparian zones support up to 400 percent more plant biomass, up to 200 percent more species, and

contribute to large increases in density and species richness for birds when compared to upland areas.

Between 69% to 92% of all amphibian occur in wetland ecosystems. The scaleless, permeable amphibian skin requires constant moisture to retain body fluids. Both water quantity and quality parameters are of importance to the survival of individual amphibians and ultimately populations of the species.

Reptiles are not nearly as dependent on wetlands since their scaly covering provide resistance to desiccation. Riparian areas are heavily utilized (50% to 72% of all species) for the available drinking water, prey, and vegetative resource (cover). The moist soil characteristic of riparian zones also provide preferred nesting habitat for many reptiles.

The riparian areas for the Pines tract Project Area, Link Canyon, and SITLA Muddy Tract are shown on Plate 3-1. A survey for amphibians and mollusks was conducted in the Link Canyon Portal area in June of 2002. No amphibians or mollusks where found in the portal area nor where any protected or sensitive species found in the area. A copy of a report of the investigation is contained in Appendix 2-9.

Raptors

Only one nest, that of a Cooper's Hawk, was found in 1980 (Appendix 3-4). The one Cooper's Hawk nest found was in an area seemingly less favorable than surrounding canyons. Quitchupah Canyon appeared to be prime habitat, but no nests were found.

Golden Eagles were seen on nearly every survey day during the 1980 survey by Clayton White of Brigham Young University (Appendix 3-4). The presence of two adults accompanied by a juvenile suggest their nearby breeding, however no nests were located.

Appendix 3-4, Table 1 contains a list and the number of sightings for the birds inventoried during the 1980 raptor survey.

A raptor survey conducted April 14, 1987, located three Golden Eagle nests (Appendix 3-4). Two of the nests were tended and contained greenery, the third had an adult eagle incubating eggs.

In October of 1988 an environmental assessment of the Quitchupah Lease area was performed by personnel from the Forest Service and Bureau of Land Management. During the assessment 6 Golden Eagle nests were located.

The SUFCO Mine portions of the annual raptor surveys conducted by UDWR are located in Appendix 3-4 in the Sufco Mine MRP Confidential file. Future annual raptor surveys will be submitted each year in the annual report to the Division.

Most raptor nest locations are located outside the current planned mining subsidence areas. Any raptor nest that has a potential to be disturbed by subsidence will be evaluated with DWR and FWS. An appropriate plan of action will be developed on a case by case basis.

The Prairie Falcon has also been reported by U.S. Forest Service and Bureau of Land Management personnel for the planning unit that encompasses the SUFCO Mine area.

The Quitchupah Drainage, of which Link Canyon is a tributary, was identified in the Quitchupah Creek Road DEIS (2001) as not likely to contain Mexican Spotted Owls and dedicated surveys were not necessary. However, the Manti-La Sal National Forest reported that a Mexican Spotted Owl survey of the area was being conducted as part of their Muddy Creek EIS Data Adequacy study. Results of surveys conducted in 2002 and 2003 indicated no Mexican Spotted Owls were found in the Link Canyon Portal area or the Muddy Tract area (Appendix 3-12). Additionally, Sufco does not plan to conduct construction activities during the nesting and rearing times (February 1 through August 31) of the owl.

The lack of permanently running water has an effect on raptors. Many species, such as accipiters, appear to rely on streams and the associated riparian vegetation (Hennessy, 1978).

Known raptor nests are shown on Plate 3-3, refer to Section 3.3.3.3 for additional raptor information.

Information about raptors specific to the Pines Tract Project area is provided in the VWP report (Appendix 3-9). Information about raptors specific to the Muddy Tract area is provided in the Cirrus report (Appendix 3-11). Information about raptors specific to the West Coal Lease Modifications and the area of the 2016 2RWL sinkhole repair are summarized in Appendix 3-13 and Section 3.2.2.2.

Elk

The elk herd (#14) is a significant wildlife resource to the citizens of Utah and there is considerable hunting pressure. Winter and summer range is in generally good conditions, but drought is an immediate concern (Big Game Annual Report, 1991).

Although the potential area of impact is not critical to the continued existence and perpetuation of the herd, it is important to maintenance of current population levels, and portions of the entire lease area are used annually on a seasonal basis. The aspen areas of Duncan Mountain serve as calving areas for the small herd, (10-20 animals observed during the 1980 summer in that area) but based on pellet counts (WIL, Table 7) the major portion of the lease area is utilized in late fall, winter, and early spring.

In May, while there was still snow on the ground, considerable fresh elk sign (pellets and tracks) was found around the Acord Lakes. By June 5, 1980, when access was available to the other areas, elk tracks were concentrated in the ponderosa, mahogany, aspen and manzanita communities along the ridges and rims of the canyon, plus in the canyons such as Duncan's Draw and Lizonbee Springs. During the summer the elk and elk signs were sighted near the top of Duncan Mountain and at the head of the South Fork of Quitchupah. It seems that the elk in question do not always winter on the rims nor the plateau but in the lower elevation areas to the southeast. This observation was substantiated by a conversation with a local forest ranger out of

Richfield. The amount of snow is probably the determinant, with the elk wintering wherever there is available forage from the rim to the low brush areas in the southeast.

The fact that elk utilize the entire area of concern during some time of the year means that all aspects and timing of the actions must be considered. However, since the SUFCO Mine has been operational since the early 1940's and since there are no plans for additional surface facilities other than ventilation portals along the cliffs, there should be little additional disturbance to the elk. The animals have already accommodated the human disturbance associated with the mining and hauling of coal.

Information about elk winter-range and migration routes specific to the Pines Tract Project area is provided in the VWP report (Appendix 3-9). Information about elk winter-range and migration specific to the Muddy Tract area is provided in the Cirrus report (Appendix 3-11). Information about elk winter-range and migration specific to the West Coal Lease Modifications and the area of the 2016 2RWL sinkhole repair are summarized in Appendix 3-13.

Mule Deer

Mule deer on the mine area are considered part of Herd Unit 43 by the UDWR. The animals in the environs of concern utilize the entire assessment area but seasonally concentrate in and more heavily utilize specific habitat types.

During the summer the mule deer generally utilize all of the habitats near watering areas. The most heavily used communities were the sage, mountain brush and the composite of aspen, mountain mahogany, manzanita and ponderosa. This is as expected since there is considerably more browse in these communities than in the others sampled.

With the onset of fall and winter the mule deer latitudinally migrate. Initially (late fall and early winter) they concentrate on the plateau area where they intermingle with the elk but when the snow gets too deep for them to traverse they move into the low elevation sage, and pinyon juniper areas to the southwest. The wintering areas for mule deer make them susceptible to road strikes in the vicinity of the haul and access road for the SUFCO Mine and Interstate 70.

Information about mule deer winter-range and migration routes specific to the Pines Tract Project area is provided in the VWP report (Appendix 3-9). Information about mule deer winter-range and migration specific to the Muddy Tract area is provided in the Cirrus report (Appendix 3-11). Information about mule deer winter-range and migration specific to the West Coal Lease Modifications and the area of the 2016 2RWL sinkhole repair are summarized in Appendix 3-13.

Cougar

The entire SUFCO Mine area provides substantial value, and year long habitat for cougar. The animal ranges throughout the area as evidenced by a sighting one third of the way down the slope in Quitchupah Canyon, one half mile below the confluence of South Fork, and tracks in the mud near Jack Adley's Monument, Broad Hollow, and in the dust of the road near Acord Lakes. Though animals range throughout the area, their movements are often dictated by migration patterns of their primary food source (mule deer) and human disturbance. Concern must be given to the cougars particularly when the females are accompanied by their young who are learning to hunt and survive. This is considered a sensitive period for cougars and it is best if disturbance is minimized during this time. However, this period in their life cycle is difficult to determine for cougars since they are known to reproduce year round.

Bobcat

The mine and adjacent areas provide substantial value habitats for bobcats, who were evidenced, by sightings and tracks, to occupy or use all terrestrial habitats on the entire area of potential impact. Sensitive periods would be late February when parturition occurs, May and June when young bobcats are first exploring and learning to hunt. Bobcats are not as secretive as cougar, making them less likely to avoid the high human disturbance areas and making them more vulnerable to open human harassment and illegal killing. Since this is an ongoing mining operation, pressures on bobcats should be unchanged.

Black Bear

Bear tracks were observed in Broad Hollow, but Forest Service personnel indicated to us that most of the bear sightings occurred on White Mountain. At best black bear are not abundant nor are they active year round. Sensitive periods in the life cycle of the black bear are February and March

when the cubs are born and when they accompany their mother on initial foraging expeditions during early summer. Since parturition occurs within the winter den and since disturbance in the black bear habitat will be limited to subsidence, this sensitive period will be little impacted by the proposed action.

Mountain Cottontail

The entire mine area provides substantial value, and year long habitats for cottontail rabbits. The young are born between April and July which is considered a sensitive period, but the proposed actions will in all probability not seriously alter the reproductive potential of the population. Hunting pressure will likely not increase, nor will illegal kills. However, this would not matter since hunted rabbit populations are more healthy and stable than non-hunted populations. Subsidence could potentially cause death from caving burrows and disrupt reproduction for a short time.

Snowshoe Hare

The snowshoe hare is present in and dependent upon the limited spruce-fir vegetation habitat of the mine area year round. The sensitive period for reproduction is from April 1 to August 15. Subsidence will not impact the above ground dweller as it does subterranean inhabitants. Little change in snowshoe hare populations will result from the proposed actions. Hunting pressure, legal and illegal, will be the most influential activity of man upon snowshoe hares, but will be of little far reaching impact.

Fur bearers

Limited portions of the mine and adjacent areas provide substantial value habitats for a few species categorized by management agencies as fur bearers: ermine, long-tailed weasel, badger and the striped skunk. The breeding and rearing activities of these non-migratory species occurs within the area and their dens and burrow systems are important to maintenance of their populations, but it is unlikely that the proposed actions will seriously impact them for any length of time. Subsidence will be localized and new burrows will be built or old ones reconstructed after it occurs. These species are widespread and adaptable to the activities of man.

Small Mammals

Small mammals represent a significant part of the ecosystem. The majority are herbivores and are the primary source of food for higher trophic levels, particularly raptorial birds, canids and felids. The potential exists for caving burrows in and/or changing burrow continuity due to fracturing of the strata. Should this occur, it is likely that young mammals in the nest would be crushed or cut off from parental care. Although this would temporarily alter the population density and age structure, recovery would be imminent and rapid. The 1997 Bat Survey for the SUFCO Mine conducted by J. Mark Perkins & Joshua R. Peterson is included in Appendix 3-8.

Information about small mammals specific to the Pines Tract Project area is provided in the VWP report (Appendix 3-9). General information about small mammals specific to the Muddy Tract area is provided in the Cirrus report (Appendix 3-11). General information about small mammals specific to the West Coal Lease Modifications and the area of the 2016 2RWL sinkhole repair are summarized in Appendix 3-13 and Section 3.2.2.2.

Threatened and Endangered Plant and Wildlife Species. Passage of the Endangered Species Act of 1973 (Public Law 23-20S) provided the legal basis for establishment of lists of endangered and threatened plant species. Such lists were prepared under direction of the Smithsonian Institution, and were published subsequently in the Federal Register (40: 2782 427924, 1975; and 41: 2452 4 24572, 1976). The region under investigation was included in a report on threatened and endangered species of the Central Coal lands of Utah (Welsh 1976). An inventory of endangered wildlife species performed in 1989 by the Division of Wildlife Resources recorded no species within the proposed permit area (conversation with Pamela Hill, DWR, Cedar City, 1991). Table 3-1 provides a list of Federally listed Threatened and Endangered Species that have been identified in the Utah counties in which Sufco lies. However, this list does not necessarily indicate these species are found within the mine permit boundaries.

A survey of the literature has failed to indicate the presence of any endangered or threatened plant species in the area. This lack of critical or unique species is supported by the field surveys of the lease areas. The region was searched by walking parallel transects on a quarter-section by quarter-section basis, with each community type within each quarter-section being traversed. No endangered or threatened species were encountered in the lease area or in the adjacent areas.

There are no federally listed threatened or endangered fish species inhabiting the aquatic habitat.

A discussion about threatened, endangered or otherwise sensitive plant and animal species of the Pines Tract Project area is given in Appendix 3-9. A discussion about threatened, endangered or otherwise sensitive plant and animal species of the Muddy Tract area is provided in the Cirrus report (Appendix 3-11). A discussion about threatened, endangered or otherwise sensitive plant and animal species of the West Coal Lease Modifications and the area of the 2016 2RWL sinkhole repair are summarized in Appendix 3-13 and Section 3.2.2.2.

plan. Sufco will meet all of the monitoring and mitigation responsibilities described in the plan as it pertains to the undermining of the East Fork of Box Canyon.

2RWL Sinkhole Area - Inventory information associated with the area of the emergency sinkhole repaired in October 2016 is included in Appendix 3-13 and Confidential Appendix 4-2. When the West Coal Lease Modification Environmental Assessment UT-070-08-083 was prepared in 2009 by the BLM and Fishlanke National Forest the area of the sinkhole was included as part of Lease U-47080. A copy of the assessment (EA) was incorporated into Appendix 3-13 of the permit on February 1, 2011. The following is a summary of the biology information from the aforementioned EA.

- No federally listed or candidate plant or wildlife species, or their critical habitats, have been identified in the area covered by the EA. Forest Service sensitive species in the area may include spotted bat, Townsends big-eared bat and greater sage grouse. Refer to Table 3-3 in environmental asssessment in Appendix 3-13 for additional explanation.
- The area lies within Forest Service Management Area 4B, the management emphasis is on the habitat needs of one or more management indicator species.
- The drainages in the area support limited areas of wetlands. The wetlands would continue to be subject to natural impacts and ongoing grazing. Due the limited extent, spotty distribution and low quality riparian and aquatic habitat, potential for adverse effects was expected to be low.
- Subsidence could effect cliff-nesting species, however nesting sites sites are not limited and new habitat would offset potential loss.
- Based on the Forest Service vegetation mapping (2007) the vegetation in the effected area is sage/perennial grass.
- In upper Mud Spring Hollow (north of sinkhole) the spring was developed for livestock watering, but was dry in July 2008 and was disconnected and dilapidated in 2009. The seasonal wetland hydrology continued to support the sedges and rushes in 2008. The determination of wetland boundaries in the 2007 vegetation mapping is exaggerated in this area according to the EA. Impacts to springs associated with the wetland is expected to decrease with increasing overburden depth.
- The assesment of wildlife impacts was based on a site visit in July 2008, review of NEPA and other pertinent documents (Cirrus 2008a). Information on management indicator species (MIS) was provided by Fishlake National Forestt (Rodriguez et al 2006). Refer to Tables 3-3 and 3-4 of EA for additional information.
- In the Southern Rockies/Colorado Plateau Bird Conservation Region 16 there are 29 species of concern which could occur in the area. Three were most likely species were part of the Cirrus

reported Biological Evaluation (2008). They were determined to be unaffected because habitat is either not present or would not be affected.
-Livestock grazing has occured on the area since the late 1800's and the area is currently grazed under the Forest Service Quitchupah Cattle and Horse Allotment.

The area of Coal Lease U-47080 was also a part of an Environmental Assessment in 1981as part of the lease application package.

3.2.2.3 Fish and Wildlife Service Review

If requested, the applicant authorizes the release of information pertaining to Section 3.2.2 and 3.3.3 to the U.S. Fish and Wildlife Service Regional and Field office for their review.

3.2.3 Maps and Aerial Photographs

The lease area was mapped by use of a mosaic of aerial photographs and assured by ground inspection. Vegetation sampling locations/reference areas are shown on Plate 3-1.

3.2.3.1 Location and Boundary of Proposed Reference Area

The locations of the vegetative reference areas are found on Plate 3-1. Area 13 shown on Plate 3-1 is to be used as a mapping unit only and not a reference area or validation site. Site 12 will be used as the reference area for the minesite sedimentation pond area.

3.2.3.2 Elevations and Locations of Monitoring Stations

Raptor nest locations and elk and deer range are shown on Plate 3-2 and 3-3. The permit area contains no fish monitoring stations.

3.2.3.3 Facilities for Protection and Enhancement

Sections 3.3.3.3 and 3.5.8.5 contain additional discussion pertaining to protective measures taken by the applicant in behalf of wildlife.

Power lines within the SUFCO Mine permit area were modified during the summer of 1981 to comply with the guidelines of REA Bulletin 61-10, "Power Line Contacts by Eagles and Other Large Birds" (see Plate 5-5 for the power pole locations).

3.2.3.4 Vegetation Type and Plant Communities

Vegetative types and plant communities are outlined on Plate 3-1 of this application.

Pages 3-35 thru 3-36 are Intentionally Blank

Reclamation of the portal access road and portal area will include transplanting Creeping Oregon Grape. Creeping Oregon Grape will be transplanted to the topsoil pile during site construction and it is anticipated a portion of these plants will be used during reclamation of the access road.

2RWL Sinkhole Repair and Reclamation: At the request of the Fishlake Forest the seed mix for reclamation of the site in 2016 included the following seed mix which was broadcast in October immediately following the placement of soil and pocking/gouging of the site. Mulch was not used to discourage impact from livestock and large mammal browsing the mulch on the reclaimed sinkhole area. Refer to Sections 5.2.1.1 and 5.4.1.1 of Chapter 5 for additional information.

Scientific Name	Common Name	PLS lbs/acre
Elymus trachycaulus	Slender Wheatgrass	3
Achnatherum nelsonii	Columbia needle grass	1
Elymus glaucus	Blue Wildrye	1
Aster glaucodes	Blueleaf Aster	0.25
Sanguisorbia minor	Small burnet	1
Lupinus argenteus	Silvery lupine	1
Total		**7.25**

The sagebrush grass community reference area for the Sufco waste rock site sampled by Mt. Nebo Scientific will be used for the sinkhole reclaimed area (Volume 3, Appendix IVA). The success standard recommended in the report by Mt. Nebo Scientific is 2,000 plants per acre. There is an expectation that shrubs species in the area of sinkhole will invade the seeded area, since a shrub seed was not included in the seed mix recommended by the Forest Service. In addition, the topsoil from the sinkhole was stockpiled and replaced in a very short time and likely contains sagebrush and rabbit brush seed. The permittee commits to evaluate the number of woody species stems in the reclaimed sinkhole reclamation area in 2020/2021. The permittee will determine a course of action in consultation with biologists from the Fishlake National Forest and Division should the count of stems or diversity be of concern.

Method Used for Planting and Seeding. The entire disturbed area will be revegetated using various seeding methods such as hydroseeding, broadcasting or drilling. The best available economically feasible technology will be used at the time of seeding. The tree and shrub seedlings

will be planted in clumps to maximize edge effect and provide more adequate cover for wildlife. At least five clumps per acre (consisting of 100 seedlings per clump) will be planted at intervals ensuring that 35 to 50 percent of each acre is covered.

Mulching Techniques. The mixture and application rate will be:

2000 lbs. of mulch per acre
100 lbs. of nitrogen per acre
100 lbs. of phosphorus per acre

The slopes and overfill areas will involve scarification and/or construction of small terraces on the slopes. The prepared slope will tend to hold moisture and to allow for places where plants can grow.

If hydro-seeding is used, first seed, tackifier and wood fiber mulch (400 lbs/acre) will be mixed in a water slurry and applied. The mulch acts as a buffer to protect the seed from damage while spraying and as a visual indicator to verify the area covered. Next, fertilizer, tackifier, and wood fiber mulch (2000 lbs/acre) will be mixed in a water slurry and applied. The seedlings of shrubs and trees will be placed through the hydro-mulch material.

The pond area should be reclaimed using similar methodology at the conclusion of the mining operation. See Section 3.5.5 for additional discussion.

Irrigation, Pest and Disease Control. Subsequent to treatment, both hand set plantings and hydromulch applications may be given supplemental irrigation, as needed, until plants are well established. No persistent pesticides will be used by the Applicant in the mine area unless previously approved by the UDOGM.

The Link Canyon Portal reclaimed area will be fenced with three-strand barb wire to keep grazing livestock out of the reseeded and reclaimed area.

Measures Proposed for Revegetation Success. Success of revegetation and stabilization of the portal yard and overfill areas will be evaluated during the middle of each growing season, when cover and composition studies are most feasible. The same statistical methods and sample adequacy levels used in establishing the reference areas will be used in monitoring percent cover

and composition of revegetation attempts in disturbed areas in as much as possible. The Applicant will comply with the statistical confidence method required in R645-301-356.120. Erosion pins will be placed on slopes at the time of reseeding operations during final reclamation. A table of random numbers will be used to determine pin placement. Measurement of erosion pins will help determine revegetation success in holding soil and stabilizing slopes.

See Appendix 2-2 page 5 through 7 for the statistical methods and sample adequacy levels used to establish the reference areas.

3.4.1.3 Greenhouse Studies, Field Trials or Other Equivalent Studies

If the UDOGM requires additional testing for the purpose of demonstrating that reclamation as required by the State Program can be accomplished according to information given in the M&RP, the applicant will comply.

A field trial is to be established by Spring 1994 on the east side of the disturbed area in the vicinity of cross section C-C. The plot will be approximately .20 acres in size. Most of this slope will not be redisturbed during final reclamation and is similar to those that will be encountered in final reclamation.

The site will first be roughened by hand raking or some other method to help prepare the seed bed. The area will be broadcast seeded with the approved seed mix and recommended available fertilizer of 16 pounds nitrogen, 32 pounds phosphorus and 32 pounds potassium per acre. The seed and fertilizer will be hand raked into the prepared soil seed bed. The area will be mulched with noxious weed-free straw or hay at the minimum rate of 2,000 lbs. per acre. The straw will be anchored by hand with shovels and anchored with a plastic mesh. The plastic mesh will be anchored with wire staples. The area will then be planted with the approved available shrub seedlings. The percentage of shrub seedlings may vary due to availability, however, the area will be planted with a minimum density of 500 seedlings per acre.

3.4.2 Fish and Wildlife

The fish (see Section 3.2.2) and wildlife plan is a set of specifications and procedure to avoid potential adverse impact to wildlife and their habitat. Revegetation to sustain and improve wildlife habitat will be the primary concern of the applicant following the termination of mining operations. The plan is consistent with Sections 3.30 and 3.5.8.

3.4.2.1 Enhancement Measures

Range improvements within the lease area include 12 stock ponds, 1 water trough, several miles of range fences, approximately 1,000 acres of sagebrush burning and spraying and approximately 600 acres of reseeding (USDA, 1988). A guzzler has been added to the area recently to provide a water source for wildlife. The guzzler is protected from livestock use (See Plate 3-3 for guzzler location).

3.4.2.2 Plants Used for Wildlife Habitat

The plant species in the reclamation seed mix are consistent with those presently grown in the permit area (excluding yellow clover which is an introduced species). Section 3.4.1.2 contains the proposed reclamation seed and shrub mix.

Nutritional Value. The nutritional value will be consistent with that of vegetation in the surrounding areas.

Cover. The goal of the Applicant is to establish plant species which will provide sufficient cover for the fish and wildlife of the area. The Applicant will use rocks and dead trees and shrubs as part of the planting surface preparation to enhance the reclaimed area for wildlife habit. Rock and brush piles will be constructed to make artificial habitat. Reshaping of the disturbed area will simulate the surrounding topography. See Section 3.4.1 for additional discussion.

Ability to Support and Enhance. The plant species have the ability to support and enhance the fish or wildlife habitat after the release of the performance bonds. Shrubs will be planted in clumps of no more than 1,000 per acre.

3.4.2.3 Cropland

Cropland is not a postmining land use.

3.4.2.4 Residential, Public Service and Industrial Land Use

No residential, industrial or public service use is planned at the present time for the permit area following the termination of mining.

3.50 Performance Standards

3.5.1 General Requirements

The Applicant commits to conduct all operations in accordance with the plans submitted in Sections R645-301-330 through R645-301-340 of the permit application.

3.5.2 Contemporaneous Reclamation

Reclamation of the pre-SMCRA coal slide areas south of the permit area as shown on Plate 5-2B was completed in 1981 in accordance with a USFS and OSM-approved plan.

The Applicant will revegetate areas for interim periods with grasses and forbs. An example of this type of interim reclamation would be an area in which erosion control is needed for the interim period before redisturbance. Sparse interim vegetation will aid in preventing soil erosion. Contemporaneous reclamation will not be done in areas the Mine Health and Safety Regulations require to be kept barren of vegetation (such as areas around mine ventilation openings).

Permit conditions will dictate the reclamation measures to be performed on land disturbed by such activities as exploratory drilling.

3.5.3 Revegetation: General Requirements

A vegetative cover will be established on all reclaimed areas to allow for postmining land use (primarily wildlife habitat). Water areas and surface areas of roads will not be revegetated. The vegetative cover will be in accordance with the approved permit and reclamation plan. All species of vegetation to be used in reclamation activities, whether planted by seed or seedlings, shall be approved by the appropriate governmental agencies.

3.5.3.1 Vegetative Cover

The seed mix proposed for revegetation is intended to provide vegetative cover that will be diverse, effective and permanent. The seed mixture was selected with respect to the climate, potential seedbed quality, erosion control, drought tolerance and the mixture's ability for quick establishment and spreading.

Native Species. The vegetative mixture will be comprised of species native to the area, capable

of achieving postmining land use an approved by the UDOGM. Only native species are recommended for revegetation of the mine portal and pond areas. Diversity of species should allow ultimate utilization of plants by wildlife and by domestic livestock. Both mine portal and pond areas are regarded as harsh environments and might require exceptional methodology before successful revegetation is realized.

The revegetative species will be purchased from suppliers who will certify their percentages of purity, germination, hard seed, and percentages of maximum weed seed contents.

Extent of Cover. The vegetative cover will be at least equal in extent to the natural vegetation of the reference areas.

Stabilizing. The vegetative cover mixture is capable of stabilizing the soil surface from erosion.

3.5.3.2 Reestablished Plant Species

Compatible. The reestablished plant species have been selected to insure their compatible with the approved postmining use.

Seasonal Characteristics. The revegetation plant species will have the same growing season as the original vegetation, or in this instance as the adjacent areas.

Self-generation. The reestablished plants are species capable of self-generation and plant succession.

Compatibility. The seed mix suggested for revegetation contains plants native to the area and compatible with the plants and animals species of the permit area.

Federal and Utah Laws or Regulations. The seed mixture purchased to revegetate the mine area will contain no poisonous or noxious plant. No species will be introduced in the area without being approved by the UDOGM.

3.5.3.3 Vegetative Exception

The applicant does not require vegetative exception at this time.

3.5.3.4 Cropland

The permit area contains no land designated as cropland for postmining land use.

3.5.4 Revegetation: Timing

The applicant will follow the recommended guidelines for revegetation as discussed in Section 3.4.1.1.

3.5.5 Revegetation: Mulching and Other Soil Stabilizing Practices

Hydromulching will be used on slopes 1.5:1 or steeper and will consist of chopped straw or fiber mixed with water and machine blown at the rate of 2,000 lbs/acre mulch mats may also be use on these steep slopes. Mulching and revegetation will not be attempted on sheer rock outcrops.

On slopes flatter than 1.5:1 mulch will be applied at the rate of 2,000 lbs/acre. Different mulches such as straw, hay and wood fiber may be used.

Suitable mulch and other soil stabilizing practices will be used on all areas that have been regraded and covered by topsoil or topsoil substitutes. The slopes will be scarified or small terraces will be constructed.

Slopes 1.5:1 or steeper will not hold topsoil; therefore, these slopes will be revegetated without the application of topsoil. Seeds for grasses and forbs will be incorporated in a water slurry with a tackifier and mulch material (400 lbs/acre) and applied. Fertilizer and the hydromulch materials (2000 lbs/acre) will then be applied as a separate application. The shrub and tree seedlings will be placed through the hydromulch material.

The Applicant will exercise care to guard against erosion during and after application of topsoil and will employ the necessary measures to ensure the stability of topsoil on graded slopes.

Reclaimed slopes in the area of the Muddy Creek Breakout will be protected from erosion by the application of an erosion mat, such as an excelsior mat, stapled in place. The mat will be placed

after the application of seed and fertilizer. Because of the limited area and steep slope associated with the breakout, the seed and fertilizer will be applied at the same rate as specified for hydromulching and hydroseeding.

3.5.6 Revegetation: Standards for Success

The standards for revegetation success are detailed in Section 3.4.1.2 and Appendix 2-2.

3.5.6.1 Success of Revegetation

The success standards for approval will be judged on the effectiveness of the vegetation for postmining land use, the extent of cover in comparison to the reference area, and the standards outlined in Section 3.5.3.

Sampling Techniques. The applicant will comply with the standards for success, 2statistically valid sampling techniques for measuring success, and the approved methods outlined in the UDOGM's currently approved "Vegetation Information Guidelines, Appendix A" (Appendix 3-6 contains guidelines that were in place).

Standards for Success. The sampling techniques for success will use a 90 percent statistical confidence interval as required by R645-301-356.120. The standards for success will include criteria representative of unmined lands in the area of the permit. Areas not achieving 90 percent of the cover in adjacent areas with similar vegetation will be reevaluated and augmentation reclamation measures will be made to successfully vegetate those areas.

3.5.6.2 Standards for Success

Standards of success will be applied in accordance with the approved postmining land use as described in this section.

Grazing Land or Pasture Land. The ground cover and production of living plants on the revegetated area will be at least equal to the reference area.

Cropland. There is no area designated as cropland within the permit area.

Fish and Wildlife Habitat. The success of revegetation for fish and wildlife habitat will be

determined on the basis of tree and shrub stocking and vegetative ground cover. Minimum stocking and planting arrangements will be specified by the UDOGM on the basis of local and regional conditions. Trees and shrubs will be healthy and at least 80 percent will be in place at least eight growing seasons after reclamation to allow for the bond release. Ground cover success will not be less than that required to achieve the approved postmining land use.

Industrial, Commercial or Residential. The postmining land use for the permit area is not designated for industrial, commercial or residential use.

Previously Disturbed Areas. The SUFCO Mine has been in operation since 1941. Since 1977, interim revegetation has been done but there is no record of revegetation being done prior to 1977. The applicant will restore the vegetative ground cover to that of the surrounding area and the ground cover will be adequate to control erosion.

The Link Canyon Portals will be constructed in an area that was disturbed by pre-SMCRA mining activities. The portals in this area were closed in the 1950's. Two reference areas, a Pinyon-Juniper area and a riparian area, specific to these portals were created in July 2002. Success standards for the Link Canyon Portal area will be based on a comparison between the reference areas specific to the Link Canyon Portals and the reclaimed area applying the required statistical confidence method described above.

3.5.6.3 Siltation Structure Maintenance

Siltation structures will be maintained until removal is authorized by the UDOGM and the disturbed areas has been stabilized and revegetated. The structures will be removed not sooner than two years after the last augmented seeding. For additional details on siltation structures, see Section 5.4.2.

3.5.6.4 Removal of Siltation Structures

The land on which siltation structures are located will be revegetated in accordance with the reclamation plan Sections R645-301-353 and R645-301-357.

3.5.7 Revegetation: Extended Responsibility Period

The applicant will be responsible for the success of revegetation for a period of ten years following

seeding, fertilization and irrigation of the reclaimed mine area.

3.5.7.1 Extended Period Begins

The period of extended responsibility will begin the year after the reseeding, fertilization, and irrigation have been completed.

3.5.7.2 Vegetative Parameters

Vegetation parameters will equal or exceed the approved success standard during the last two years of the responsibility period. The success standards are outlined in Sections 3.5.6.1 and 3.5.6.2 of this application.

3.5.7.3 Husbandry Practices

The Applicant will comply with UDOGM approved husbandry practices which will be normal conservation practices within the region of the mine. These practices may include disease, pest, and vermin control; and any pruning, reseeding and transplanting required.

3.5.8 Protection of Fish, Wildlife and Related Environmental Values

The Applicant will minimize disturbances and adverse impacts on fish, wildlife and their related environments as outlined in Section 3.3.3. The company will continue to educate their employees and habitat users about wildlife needs and their importance.

The intermittent flow of streams within the lease area does not support a population of game fish; therefore, there are no fisheries within the permit area to protect.

3.5.8.1 Existence of Endangered or Threatened Species

Coal mining will not be conducted where its operation might jeopardize the existence of any endangered or threatened species. The mining of coal will not result in the destruction or adverse modification of these specie's critical habitat.

Any state or federally listed endangered or threatened specie will be reported to the UDOGM upon its discovery. Mining operations will proceed in accordance with the UDOGM's stipulations. These stipulations also apply to reclamation operation at the SUFCO Mine.

Discussion of threatened and endangered species are presented in the following reports: WIL, pages 8 and 44, Appendix 3-3: RAP, pages 8-9, Appendix 3-4: and AQU, page 6, Appendix 3-5. A more current listing of threatened and endangered species are included in this M&RP as Table 3-1 and Table 3-2.

3.5.8.2 Bald and Golden Eagles

Coal mining and reclamation operations will be conducted in a manner protective of the bald or golden eagle. The applicant will promptly report any golden or bald eagle nests found within the permit boundaries and will proceed with operations in accordance with the UDOGM's stipulations.

3.5.8.3 Taking of Endangered or Threatened Species

The applicant understands that there is no permission implied by these regulations for taking of endangered or threatened species, their nests or eggs.

3.5.8.4 Replacement of Wetland and Riparian Vegetation

No riparian habitat has been disturbed.

3.5.8.5 Manmade Wildlife Protection Measure

Electric Power Lines. All power lines within the SUFCO Mine permit area were modified during the summer of 1981 to comply with the guidelines of REA Bulletin 61-10, "Power Line Contacts by Eagles and Other Large Birds". Various correspondence regarding the Applicant's modification of power lines is presented in Appendix 3-7. The locations of mine site power poles are shown on Plate 5-5.

Potential Barriers. The mine has been operating approximately 55 years and little should now be done to change the design of the portal facilities to lessen the impacts. The wildlife inhabiting and utilizing the area of concern have likely acclimated to the present facilities and consequently adjusted their behavior including migration so that a modification of the facilities to providing corridors would be more adverse than leaving the facilities as they are.

Pond Protection. Fences or other appropriate methods will be used to exclude wildlife from ponds containing hazardous concentrations of toxic-forming materials. However, at this time the applicant has no ponds containing hazardous concentrations of toxic-forming materials.

REFERENCES:

Blumer, Ralph J., 1979. Environmental Analysis, pp 25-26.

Forest Service. 1981. Lease Application U-47080

Hennessy, S. P., 1978. Ecological relationships of accipters in northern Utah -- with special emphasis on the effects of human disturbance. MS thesis, unpbl., Utah State Univ., p 66.

USDA, Forest Service, Intermountain Region 1988. Environmental Assessment for SUFCO Mine Coal Lease Application U-63214 Quitchupah Tract.

Utah Division of Wildlife Resources, Department of Natural Resources, 1991. Utah Big Game Annual Report 1991. Publication 91-12.

APPENDIX 3-13

Vegetation and Wildlife of the West Coal Lease Modifications

Add to back of existing information

Biological Assessment for the West Coal Lease Modifications Environmental Assessment

Richfield Ranger District, Fishlake National Forest

Threatened, Endangered, and Candidate Wildlife and Plant Species

Prepared by:

Cirrus Ecological Solutions, LC
965 South 100 West, Suite 200
Logan, UT 84321

Prepared for:

Fishlake National Forest
Richfield Ranger District
Richfield, UT 84701

Reviewed by:

David Tait, Forest Botanist, Fishlake National Forest
Chris Colt, Wildlife Biologist, Richfield Ranger District

November 2008

This Biological Assessment for the West Coal Lease Modification Environmental Assessment was prepared for the Richfield Ranger District of the Fishlake National Forest by:

/s/*Tom Ashton* November 2008

Tom Ashton, Wildlife Biologist Date
Cirrus Ecological Solutions, LC.

This Biological Assessment was reviewed and accepted by:

David Tait, Forest Botanist Date
Fishlake National Forest

Chris Colt, Wildlife Biologist Date
Richfield Ranger District

TABLE OF CONTENTS

LIST OF TABLES

LIST OF FIGURES

I. INTRODUCTION

The purpose of this Biological Assessment (BA) is to review the Ark Land Company's proposed West Coal Lease Modifications to determine the project's potential to impact federally-listed threatened, endangered, and proposed plant and animal species. Section 7 of the Endangered Species Act of 1973 (ESA, PL 93-205, as amended) requires federal agencies to ensure that any activities they authorize, fund, or carry out do not jeopardize the continued existence of any wildlife species federally listed as threatened, endangered, or proposed. Consultation with the U.S. Fish and Wildlife Service (USFWS) is required if threatened or endangered (T&E) species, or their critical habitat may be affected by a proposed action. One purpose of this BA is to determine whether consultation with the Service is necessary. This BA is prepared in accordance with legal requirements set forth under Section 7 of the ESA (16 U.S.C. 1536 (c)), and follows standards established in the Forest Service Manual (FSM 2671.2 and 2672.4).

Six federally-listed species may occur on the Fishlake National Forest (FLNF), including one species listed as threatened and five species listed as endangered (Rodriquez et al. 2006). Table 1 presents a probability of occurrence analysis for these species in the project area. Those species that would not occur in the project area would not be affected by the project and are not carried through analyses in this report.

Table 1. Species listed under the ESA that potentially occur or have suitable habitat on the Richfield Ranger District of the Fishlake National Forest (Rodriguez et al. 2006).

Species Common/ Scientific name	Status[1]	Habitat Suitability and/or Known Occurrences in or near the Project Area
Utah Prairie Dog (*Cynomys parvidens*)	T	**Not Considered.** The proposed coal lease modification areas do not cover any known current or historically occupied or suitable habitat for Utah prairie dog on National Forest System lands. No critical habitat has been designated on the Forest.
Mexican Spotted Owl[2] (*Strix occidentalis lucida*)	T	**Not Considered.** The project is located outside of the known range for this species and no nests are known on the Forest. This species has only been observed in Wayne County on the Forest.
Western Yellow-billed Cuckoo (*Coccyzus americanus occidentalis*)	C	**Not Considered.** This species is associated with low elevation cottonwood riparian areas with dense understories. The project area does not contain the required habitat components and is higher in elevation than generally used by cuckoos. There are no records of this species on the Forest.
San Rafael Cactus (*Pediocactus despainii*)	E	**Not considered.** Endemic to the Capitol Reef area; does not occur in the geographic area of the proposed project.
Last Chance Townsendia (*Townsendia aprica*)	T	**Not Considered.** Species is restricted to Castle Valley and adjacent environs in western Emery County and closely adjacent eastern Sevier County; does not occur in the geographic area of the proposed project.
Maguire's Daisy (*Erigeron maguirei*)	T	**Not Considered.** Endemic to the San Rafael Swell in Emery County and Capital Reef National Park in Wayne County; does not occur in the geographic area of the proposed project.

[1] Species Status: T = Threatened; E = Endangered; C = Candidate Species.

[2] Critical habitat (less than 100 acres) has been designated on the Fishlake National Forest for the Mexican spotted owl; this habitat does not occur on the Richfield Ranger District.

II. CONSULTATION AND FIELD REVIEW TO DATE

Chris Colt, Wildlife Biologist for the Fishlake National Forest, was consulted to determine wildlife issues and survey requirements for the project. A thorough field visit to the site, aerial photography, topographic maps, and familiarity with the project area were brought to bear on this process.

David Tait, Forest Botanist for the Fishlake National Forest, was consulted to determine plant survey issues for the project.

Field survey requirements for the Forest Service portion of the project area were determined by assessing the habitats present in the project area. During this process, it was determined that the project area contains no habitat for the Federally-listed species on the Forest (Table 1). Because of this, no field surveys were required for this BA.

III. CURRENT MANAGEMENT DIRECTION

Current policy stated in the Forest Service Manual (FSM 2670) regarding threatened and endangered species includes the following direction:

1. Place top priority on conservation and recovery of endangered, threatened, and proposed species and their habitats through relevant National Forest System, State and Private Forestry, and Research activities and programs.

2. Establish through the Forest planning process objectives for habitat management and/or recovery of populations, in cooperation with States, the USFWS, and other Federal agencies.

3. Through the biological assessment process, review actions and programs authorized, funded, or carried out by the Forest Service to determine their potential for effect on threatened and endangered species and species proposed for listing.

4. Avoid all adverse impacts on threatened and endangered species and their habitats except when it is possible to compensate adverse effects totally through alternatives identified in a biological opinion rendered by the USFWS; when an exemption has been granted under the act, or when the USFWS biological opinion recognizes an incidental taking. Avoid adverse impacts on species proposed for listing during the conference period and while their Federal status is being determined.

5. Initiate consultation or conference with the USFWS, when the Forest Service determines that the proposed activities may have an adverse effect on threatened, endangered species; is likely to jeopardize the continued existence of a proposed species; or result in the destruction or adverse modification of critical or proposed critical habitat.

6. Identify and prescribe measures to prevent adverse modification or destruction of critical habitat or other habitats essential for the conservation of endangered, threatened, and proposed species. Protect individual organisms or populations from harm or harassment as appropriate.

A goal documented in the *Fishlake National Forest Land and Resource Management Plan* (USDA Forest Service 1986) is to "identify and improve habitat for sensitive, threatened, and endangered species including participation in recovery efforts for both plants and animals." In addition, the Plan states, "Current habitat of threatened and endangered species will be maintained. No adverse effects from management activities will be allowed." General Direction in this Plan states, "Maintain habitat for viable populations of existing vertebrate species. Habitat for each species on the Forest will be maintained by protecting at least 40 percent of the ecosystems for existing species. Proper juxtaposition of ecosystems must be considered... Manage and provide habitat for recovery of endangered and threatened species. Do not allow activities that would negatively impact endangered, threatened, or sensitive plant or animal species. Follow direction in recovery plans. Management Activities are not evident, remain visually subordinate, or may be dominant, but harmonize and blend with the natural setting... " (Forest Plan, IV- 66).

IV. DESCRIPTION OF THE PROJECT

The FLNF and Bureau of Land Management (BLM) and have received an application to modify Lease U-63214 and a request for revision of application to modify Leases SL-062583 and U-47080, SUFCO Mine, from Ark Land Company (Ark), the land holding company for Arch Coal, Inc. (Arch). The modification and revisions would extend SUFCO mining operations beneath NFS lands administered by the FLNF, Richfield Ranger District in Sevier County, Utah (Figure 1). The mining lease would be administered by the BLM, Price Field Office. Activities on Federal public land would require approval by the BLM and the USFS for lands under their respective jurisdictions. If approved, the FLNF Supervisor would approve mining beneath NFS land. The BLM would issue a lease modification for potential mining. The proposed lease modifications are adjacent to SUFCO's existing mining operations.

The Forest Service and BLM propose to modify Federal Coal Lease U-63214 to add approximately 640 acres of coal to this lease. The proposed modification to this federal coal lease involves adding coal reserves to be recovered by underground mining methods. The legal description of the proposed modification area is Township 21 South, Range 4 East, Salt Lake Base and Meridian, Section 26 (NE; SE; E2SW) and Section 35 (NW; W2SW). The proposed lease modification would allow for the development and recovery of Federal coal using longwall mining methods.

The Forest Service and BLM also propose to revise previous applications to modify Leases SL-062583 and U-47080 totaling 880 acres and 796 acres. These leases also propose adding coal reserves to be recovered by underground mining methods. The revised legal description for Lease SL-062583 is Township 22 South, Range 4 East, Salt Lake Base and Meridian, Section 2 (SE; S2SW), Section 3 (SESE), Section 10 (E2NE; NESE), and Section 11 (N2; N2S2). The revised legal description for Lease U-47080 is Township 21 South, Range 4 East, Salt Lake Base and Meridian, Section 35 (NE; SE; E2SW) and Township 22 South Range 4 East, Salt Lake Base and Meridian, Section 2 (Lots 1; 2; 3; 4; S2NW; S2NE; N2SW), and Section 3 (NESE). The proposed lease modification would allow for the development and recovery of Federal coal using longwall mining methods.

Ark proposes to minimize impacts to sensitive resource values by incorporating environmental protection measures into the Proposed Action and implementing necessary mitigation measures required by the decision maker. No roads, trails, power transmission lines, or above ground mining facilities would be constructed for this project. Other than subsidence of the mined area, it is expected that there will be no surface impacts resulting from implementation of the Proposed Action.

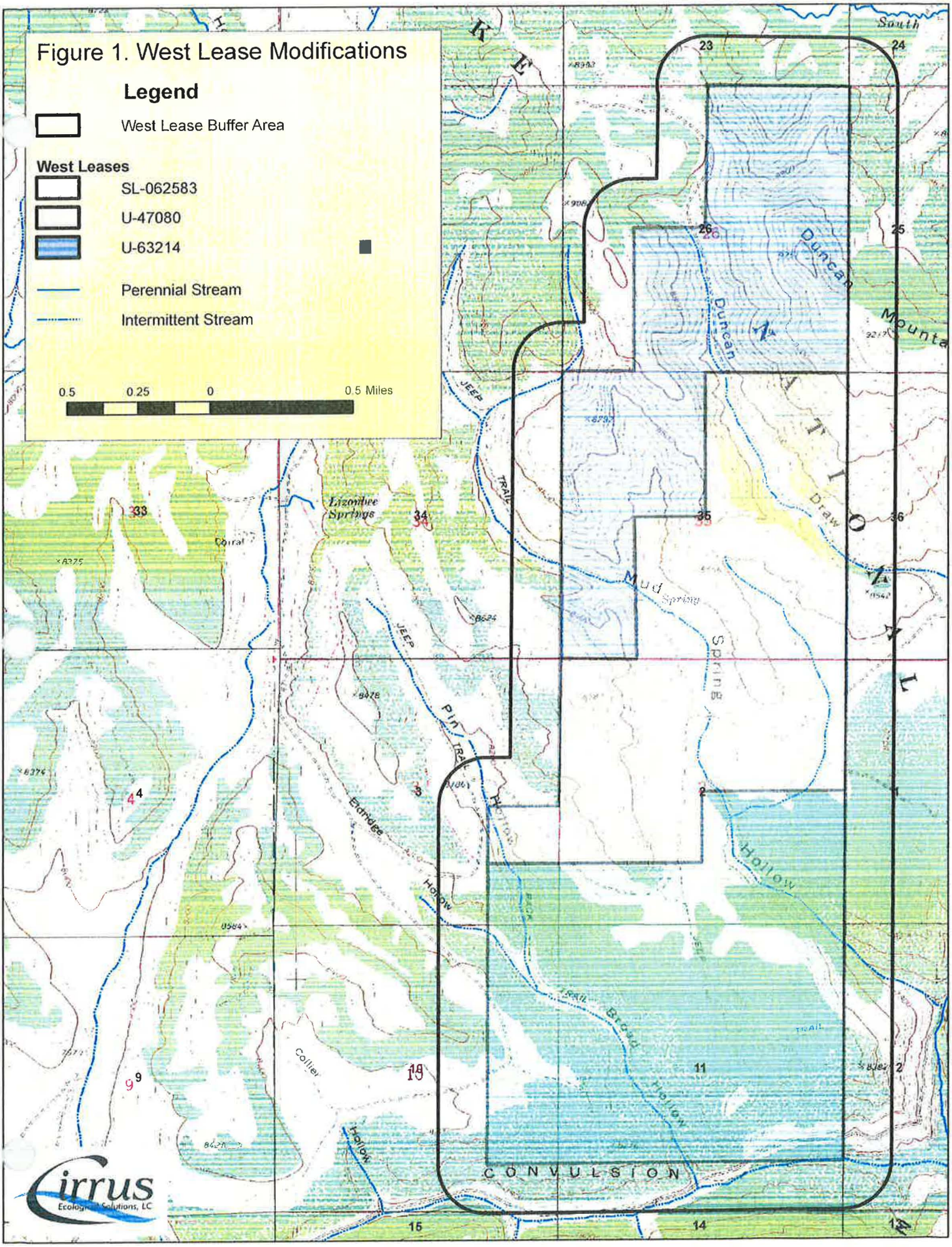
Figure 1. West Lease Modifications
Legend
West Lease Buffer Area
West Leases
SL-062583
U-47080
U-63214
Perennial Stream
Intermittent Stream
0.5
0.25
0
0.5 Miles
Lizombee Springs
Duncan
Mud Spring
Eldridge
Collier
Hollow
CONVULSION
Cirrus Ecological Solutions, LC

V. HABITAT DESCRIPTION

Following is a brief description of the habitat within the project area on NFS lands. Elevation of the area ranges from approximately 7,600 feet in Brood Hollow to 9,250 feet at the top of Duncan Mountain. Based on Forest Service vegetation mapping, 13 community types occur in the project area, as listed in Table 2. Ponderosa pine/curl-leaf mahogany/manzanita is the dominant vegetation type within the project area, followed by riparian and mountain sage/perennial grass, accounting for approximately 39.5 percent of the project area on NFS lands.

Table 2. Amount of vegetation community types contained within the proposed Ark West Coal Lease Modifications project.

Community Type	Acres in Project Area	Percent of Total Project Area
Mountain sage/perennial grasses	400.86	11.4
Curl-leaf mountain mahogany	183.25	5.2
Mixed conifer/aspen	394.34	11.2
Mountain shrubs	68.57	2.0
Unlabeled vegetation types	16.16	0.5
Perennial grass	90.29	2.6
Ponderosa pine/curl-leaf mahogany/manzanita	535.22	15.3
Pinion-juniper woodland	71.53	2.0
Aspen/perennial grass	276.78	7.9
Gambel oak/mountain big sage	362.40	10.3
Gambel oak/mountain juniper	368.77	10.5
Gambel oak/aspen	291.27	8.3
Riparian	448.69	12.8
Total	**3,508.13 acres**	**100.0%**

VI. EXISTING ENVIRONMENT

As noted in Table 1, no federally-listed species have potential to occur in the project area and none are carried forward for this analysis in this section

VII. EFFECTS OF THE PROPOSED ACTION

1. Direct and Indirect Effects

Because no Federally-listed species occur in the project area, there would be no effect to these species.

2. Cumulative Effects

The ESA defines cumulative effects (50 CFR 402.2) as the additive effects of federal, state and private activities that are reasonably certain to occur in the watershed where the Federal action occurs. Activities that occur, have occurred, or are reasonably foreseeable in the project vicinity include recreation (such as hunting and ATV use), vegetation treatments (such as chaining), livestock grazing, and oil and gas exploration and development. Since the proposed action would

have no effect on any federally-listed species, there would be no cumulative effect from the proposed project.

VIII. DETERMINATIONS AND RATIONALE

As a result of the analysis documented in this BA, it is our determination that implementation of the West Coal Lease Modifications would have **no effect** on any Federally-listed species. Therefore, formal consultation or conference with the USFWS is not warranted.

IX. MANAGEMENT RECOMMENDATIONS

Since the proposed project would not affect and does not contain suitable habitat for the species listed in Table 1, no mitigation measures or other management actions are recommended.

X. LITERATURE CITED

Rodriguez, R.L, K. Rasmussen, M. Madsen, J. Whelan, S. Flinders, and D. Tait. 2006. Life History and Analysis of Endangered, Threatened, Candidate, Sensitive, and Management Indicator Species of the Fishlake National Forest. Version 4.1.

USDA Forest Service. 1986. Fishlake National Forest Land and Resource Management Plan. Richfield, UT.

USFS. 2007. Vegetation Map.

Biological Evaluation for the West Coal Lease Modifications Environmental Assessment

Richfield Ranger District, Fishlake National Forest

Sensitive Wildlife and Plant Species

Prepared by:

Cirrus Ecological Solutions, LC
965 South 100 West, Suite 200
Logan, UT 84321

Prepared for:

Fishlake National Forest
Richfield Ranger District
Richfield, UT 84701

Reviewed by:

David Tait, Forest Botanist, Fishlake National Forest
Chris Colt, Wildlife Biologist, Richfield Ranger District

November 2008

This Biological Evaluation for the West Coal Lease Modification project was prepared for the Richfield Ranger District of the Fishlake National Forest by:

/s/ *Tom Ashton* November 2008

Tom Ashton, Wildlife Biologist Date
Cirrus Ecological Solutions, LC.

/s/ John Stewart November 2008

John Stewart, Biologist Date
Cirrus Ecological Solutions, LC.

This Biological Evaluation was reviewed and accepted by:

David Tait, Forest Botanist Date
Fishlake National Forest

Chris Colt, Wildlife Biologist Date
Fishlake National Forest

TABLE OF CONTENTS

LIST OF TABLES

LIST OF FIGURES

I. INTRODUCTION

This Biological Evaluation (BE) analyzes and evaluates the potential effects the Ark Land Company's (Ark) West Coal Lease Modifications proposal on Forest Service Region 4 (R4) sensitive wildlife and plant species potentially occurring in areas proposed for longwall coal mining on the Richfield Ranger District, Fishlake National Forest (FLNF). This BE also recommends mitigation measures that, if implemented, would help preserve, maintain, or protect specific habitat or species in question.

The Forest Service's list entitled *Intermountain Region Proposed, Endangered, Threatened, and Sensitive Species Known/Suspected Distribution by Forest* (USDA Forest Service 2003) was reviewed to determine which sensitive species potentially present on the Forest should be addressed in this document. Table 1 lists the sensitive species reviewed for this project. It includes a brief habitat description and an analysis of habitat suitability for each species to determine if the species should be fully analyzed in this document. Only those species potentially occurring in the project area are carried forward for analysis.

Table 1. Suitability of habitat in the project area for Forest Service R4 Sensitive wildlife and plant species found on the Fishlake National Forest (USDA Forest Service 2003).

Species	Habitat Description	Analysis of Habitat Suitability/Rationale
Mammals		
Spotted bat *Euderma maculatum*	Ponderosa pine, pinyon-juniper woodlands, and shrub desert. Elevations up to 10,600 feet. Roosts in crevices of rocky cliffs.	**Considered.** Ponderosa, pinyon-juniper and shrub habitat is present.
Townsend's big-eared bat *Corynorhinus townsendii pallescens*	Semidesert shrublands, pinyon-juniper woodlands, and open montane forests. Elevations up to 9,500 feet. Roosts in caves and abandoned mines.	**Considered.** Suitable foraging habitat present; roosts limited.
Pygmy rabbit *Brachylagus idahoensis*	Areas with tall, dense sagebrush. Requires deep soils to excavate burrows.	**Not Considered.** Suitable habitat not present.
Birds		
Bald eagle *Haliaeetus leucocephalus*	Bald eagles nest almost exclusively near lakes, rivers, or sea coasts. Bald eagle winter range usually includes areas of open water such as lakes or major rivers, but may also include arid valleys. Winter roosting habitat can be large roost trees located along rivers, lakes, or reservoirs, or as far as 20 miles from water.	**Not Considered.** Bald eagles are present on the Forest in the fall, winter, and spring. There are no known winter concentration areas on the Forest. Single individuals or pairs have been documented over winter on the district.
Northern goshawk *Accipiter gentilis*	Habitat includes a wide variety of forest ages, structural conditions, and successional stages for foraging. Generally nests in coniferous, mixed coniferous, and riparian (aspen stringers) forests.	**Considered.** There are known goshawk territories on the Forest and in the vicinity of the project area.
Peregrine falcon *Falco peregrinus anatum*	Nest sites are on cliffs in mountainous areas or in river canyons and gorges. Forage in riparian areas or in open meadows.	**Not Considered.** Suitable cliff habitat for nesting and foraging not present.

Table 1. (Cont'd) Suitability of habitat in the project area for Forest Service R4 Sensitive wildlife and plant species found on the Fishlake National Forest (USDA Forest Service 2003).

Species	Habitat Description	Analysis of Habitat Suitability/Rationale
Flammulated owl *Otus flammeolus*	Mature pine, mixed conifer and aspen forests. Snags with cavities required for nesting.	**Considered.** Suitable habitat is present.
Three-toed woodpecker *Picoides tridactylus*	Coniferous and mixed forest types at elevations up to 9,000 feet. Requires snags for nesting and foraging.	**Considered.** Suitable habitat is present.
Greater sage-grouse *Centrocercus urophasianus*	Sagebrush communities used during all life cycle stages. Riparian meadows, springs, and streams are also used during late brood-rearing.	**Considered.** Suitable sage habitat present. Active leks recorded nearby.
Fish		
Bonneville cutthroat trout *Oncorhynchus clarki utah*	Small headwater streams with cool, clear water, pools, and well-vegetated streambanks. Clean, gravel substrate in cool water required for spawning. May also inhabit lakes.	**Not Considered.** There are no perennial streams or known occurrences of the species in the project or cumulative effects area.
Colorado River cutthroat trout *Oncorhynchus clarki pleuriticus*	Headwater streams and lakes with cold, clean water of the Colorado river drainage system; only occurs on the Loa Ranger District of the Fishlake National Forest.	**Not Considered.** There are no perennial streams or known occurrences of the species in the project or cumulative effects area.
Plants		
Barneby woody aster *Aster kingii var. Barebyana*	Mountain mahogany and oak communities on rock outcrops.	**Not Considered.** Outside of known range.
Wonderland alice-flower *Alicellia caespitosa*	Cliffs, ledges, and exposed outcrops on Navajo and Wingate Sandstone in Wayne County.	**Not Considered.** Outside of known range.
Bicknell milkvetch *Astragalus consobrinus*	Volcanic gravel to barren stony hillsides on the upper forks of the Sevier River and the east slope of the Utah Plateaus from southeast Emery and Sevier to southwest Garfield Counties.	**Not Considered.** Sagebrush and pinyon-juniper habitat is present in project area. However, there are no records of this species in the project area.
Tushar Mountain paintbrush *Castilleja parvula var. parvula*	Endemic to the Tushar Mountain, Beaver and Piute counties, Utah.	**Not Considered.** Outside of known range.
Pinnate spring parsely *Cymopterus beckii*	Cliff faces in sandstone canyon bottoms of Navajo Sandstone. Endemic to San Juan and Wayne counties.	**Not Considered.** Outside of known range.
Creeping draba *Draba sobolifera*	Endemic to the Tushar Mountains, Beaver, and Piute counties, Utah.	**Not Considered.** Outside of known range.

Table 1. (Cont'd) Suitability of habitat in the project area for Forest Service R4 Sensitive wildlife and plant species found on the Fishlake National Forest (USDA Forest Service 2003).

Species	Habitat Description	Analysis of Habitat Suitability/Rationale
Nevada willowherb *Epilobium nevadense*	Pinyon-juniper and mountain brush communities on limestone outcrops in Millard and Washington counties.	**Not Considered.** Outside of known range.
Elsinore buckwheat *Eriogonum batemanii var. ostlundii*	Igneous outcrops and gravels in shadscale, sagebrush, ponderosa pine, mixed desert shrub, and pinyon-juniper communities at 5,500 to 6,500 feet elevation. Endemic to Piute and Sevier Counties in central Utah.	**Not Considered.** Outside of known range.
Fish Lake niad *Najas caespitosa*	Shallow water off of Pelican Point, Fish Lake, Utah.	**Not Considered.** Outside of known range.
Little penstemon *Penstemon parvus*	Sagebrush-grass and pinyon-juniper communities on tertiary volcanic gravels. Endemic to Utah in Piute, Garfield, and Wayne counties.	**Not Considered.** Outside of known range.
Ward's penstemon *Penstemon wardii*	Desert shrub, pinyon-juniper, sagebrush, shadscale, and greasewood communities on the Bald Knoll and Arapien Shale formations at the 5,200 to 6,810 feet elevations.	**Not Considered.** Outside of known range
Arizona willow *Salix arizonica*	Wet meadows and streamside communities above 8,300 feet.	**Not Considered.** Suitable wet meadow and stream habitat is not present.
Beaver Mountain groundsel *Senecio castoreus*	Endemic to the Tushar Mountains on windswept ridges downward to spruce-fir communities in Piute County.	**Not Considered.** Outside of known range.
Maguire campion *Silene petersonii*	Ponderosa pine, aspen, and spruce-fir communities between 7,000 and 11,300 feet on Flagstaff limestone and Claron Formation. Known from the adjacent Manti-La Sal National Forest.	**Not Considered.** Suitable habitat not present.
Bicknell thelesperma *Thelesperma subnudum var. aplinum*	Navajo Sandstone and Carmel Limestone between 7,300 and 9,000 feet. Endemic to Wayne County.	**Not Considered.** Outside of known range.
Sevier townsendia *Townsendia jonesii var. lutea*	Salt desert shrub and juniper communities 5,500 to 6,000 feet in the Arapien shale and Arapien clays in volcanic rubble.	**Not Considered.** Outside of known range.

The project area contains potentially suitable habitat for the spotted bat, Townsend's big-eared bat, northern goshawk, flammulated owl, three-toed woodpecker, and greater sage grouse. These species are carried forward into analysis in this document. Habitat in the project area is unsuitable for the other species described in Table 1; therefore, the proposed project would not impact these species, and they are not considered further in this document.

II. DESCRIPTION OF THE PROJECT

The FLNF and Bureau of Land Management (BLM) and have received an application to modify Lease U-63214 and a request for revision of application to modify Leases SL-062583 and U-47080, SUFCO Mine, from Ark Land Company (Ark), the land holding company for Arch Coal, Inc. (Arch). The modification and revisions would extend SUFCO mining operations beneath NFS lands administered by the FLNF, Richfield Ranger District in Sevier County, Utah (Figure 1). The mining lease would be administered by the BLM, Price Field Office. Activities on Federal public land would require approval by the BLM and the USFS for lands under their respective jurisdictions. If approved, the FLNF Supervisor would approve mining beneath NFS land. The BLM would issue a lease modification for potential mining. The proposed lease modifications are adjacent to SUFCO's existing mining operations.

The Forest Service and BLM propose to modify Federal Coal Lease U-63214 to add approximately 640 acres of coal to this lease. The proposed modification to this federal coal lease involves adding coal reserves to be recovered by underground mining methods. The legal description of the proposed modification area is Township 21 South, Range 4 East, Salt Lake Base and Meridian, Section 26 (NE; SE; E2SW) and Section 35 (NW; W2SW). The proposed lease modification would allow for the development and recovery of Federal coal using longwall mining methods.

The Forest Service and BLM also propose to revise previous applications to modify Leases SL-062583 and U-47080 totaling 880 acres and 796 acres. These leases also propose adding coal reserves to be recovered by underground mining methods. The revised legal description for Lease SL-062583 is Township 22 South, Range 4 East, Salt Lake Base and Meridian, Section 2 (SE; S2SW), Section 3 (SESE), Section 10 (E2NE; NESE), and Section 11 (N2; N2S2). The revised legal description for Lease U-47080 is Township 21 South, Range 4 East, Salt Lake Base and Meridian, Section 35 (NE; SE; E2SW) and Township 22 South Range 4 East, Salt Lake Base and Meridian, Section 2 (Lots 1; 2; 3; 4; S2NW; S2NE; N2SW), and Section 3 (NESE). The proposed lease modification would allow for the development and recovery of Federal coal using longwall mining methods.

Ark proposes to minimize impacts to sensitive resource values by incorporating environmental protection measures into the Proposed Action and implementing necessary mitigation measures required by the decision maker. No roads, trails, power transmission lines, or above ground mining facilities would be constructed for this project. Other than subsidence of the mined area, it is expected that there will be no surface impacts resulting from implementation of the Proposed Action.

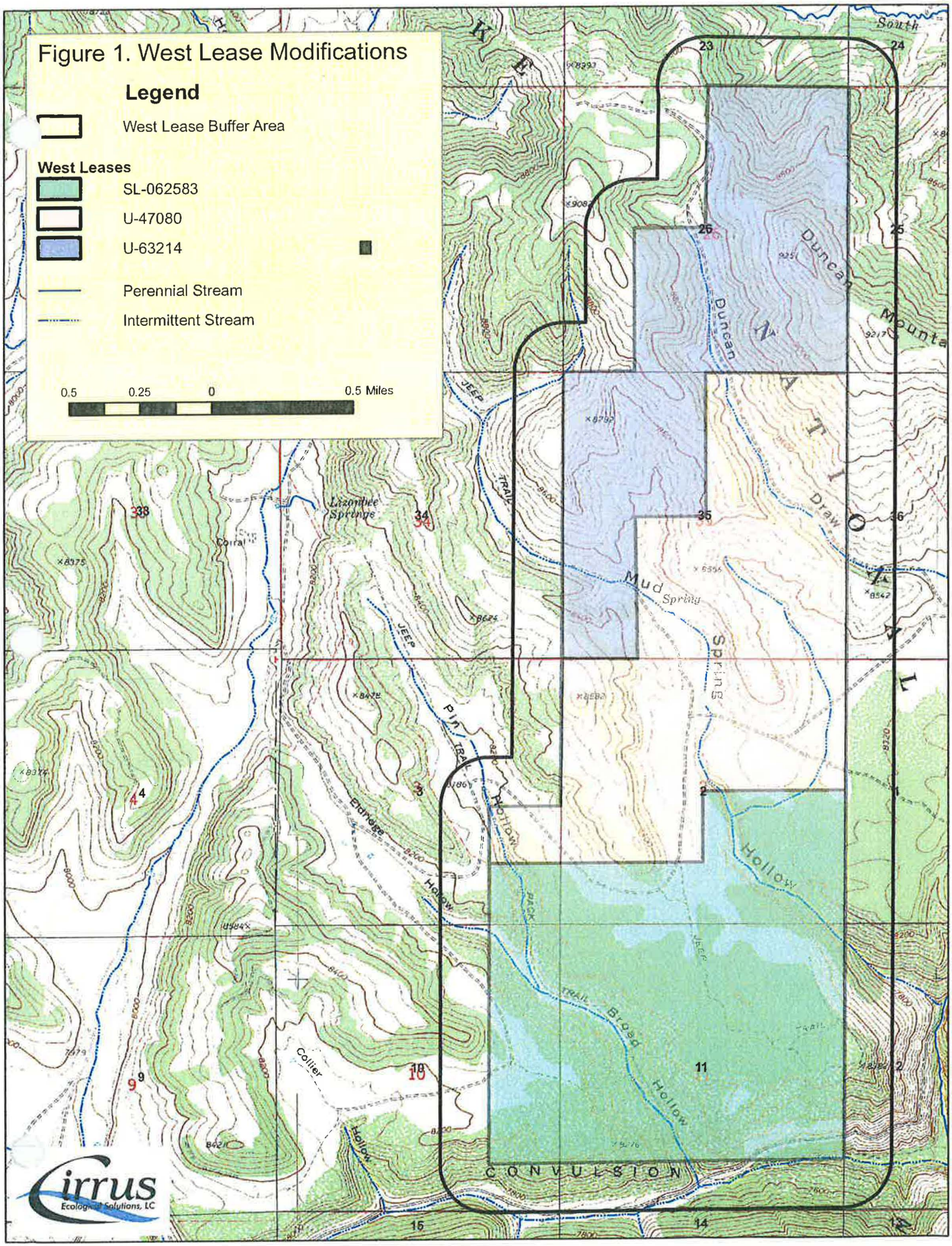
Figure 1. West Lease Modifications
Legend
West Lease Buffer Area
West Leases
SL-062583
U-47080
U-63214
Perennial Stream
Intermittent Stream
0.5
0.25
0
0.5 Miles
Duncan Draw
Duncan Mountain
Mud Spring
Lizardbee Spring
Corral
Pin Hollow
Edmiston Hollow
Back Trail
Broad Hollow
Collier Hollow
CONVULSION
Cirrus Ecological Solutions, LC

III. HABITAT DESCRIPTION

Following is a brief description of the habitat within the project area on NFS lands. Elevation of the area ranges from approximately 7,600 feet in Brood Hollow to 9,250 feet at the top of Duncan Mountain. Based on Forest Service vegetation mapping (USFS 2007), 13 community types occur in the project area, as listed in Table 2. Ponderosa pine/curl-leaf mahogany/manzanita is the dominant vegetation type within the project area, followed by riparian and mountain sage/perennial grass, accounting for approximately 39.5 percent of the project area on NFS lands.

Table 2. Amount of vegetation community types contained within the proposed Ark West Coal Lease Modifications project.

Community Type	Acres in Project Area	Percent of Total Project Area
Mountain sage/perennial grasses	400.86	11.4
Curl-leaf mountain mahogany	183.25	5.2
Mixed conifer/aspen	394.34	11.2
Mountain shrubs	68.57	2.0
Unlabeled vegetation types	16.16	0.5
Perennial grass	90.29	2.6
Ponderosa pine/curl-leaf mahogany/manzanita	535.22	15.3
Pinion-juniper woodland	71.53	2.0
Aspen/perennial grass	276.78	7.9
Gambel oak/mountain big sage	362.40	10.3
Gambel oak/mountain juniper	368.77	10.5
Gambel oak/aspen	291.27	8.3
Riparian	448.69	12.8
Total	**3,508.13 acres**	**100.0%**

IV. CONSULTATION AND FIELD REVIEW TO DATE

An initial field assessment of the habitats in project the was completed by Chris Colt, Biologist, Fishlake National Forest, and John Stewart, Terrestrial Biologist for Cirrus Ecological on July 2, 2008, to determine what sensitive wildlife species surveys would be required. The habitat assessment included walking through key areas of the West Coal Lease Modifications project area and looking at the habitats from ridge-top vantage points. Habitat blocks that appeared to hold some potential for sensitive species were identified and marked on aerial photography. Survey points for calling stations were arranged in the habitat blocks to provide the spacing required in the survey protocols for each species.

Habitats comprised of ponderosa pine, aspen, and/or mixed conifer were targeted to be surveyed. Northern goshawks and flammulated owls were called in aspen, mixed conifer, and ponderosa pine habitats. Three-toed woodpeckers were only called in mixed conifer habitats.

Surveys were completed in the designated habitat polygons for northern goshawk, three-toed woodpecker, and flammulated owls (Figure 2) following accepted Forest Service survey protocols for each species. Flammulated owl surveys were completed on July 1and 2, 2008. The first round of northern goshawk and three-toed woodpecker calling was completed on July 2 and 3, 2008. The second round of northern goshawk and three-toed woodpecker calling was completed in on July 22 and 23, 2008. All surveys used

of broadcast vocalizations for each species from the calling points spaced. The territorial alarm call was broadcast during the first northern goshawk survey. The juvenile begging call was used for the second round of northern goshawk surveys.

V. CURRENT MANAGEMENT DIRECTION

Current policy as stated in the Forest Service Manual (FSM 2670.32) includes the following direction:

1. Assist states in achieving their goals for conservation of endemic species.

2. As part of the NEPA process, review programs and activities, through a biological evaluation, to determine their potential effect on sensitive species.

3. Avoid or minimize impacts to species whose viability has been identified as a concern.

4. If impacts cannot be avoided, analyze the significance of potential adverse effects on the population or its habitat within the area of concern and on the species as a whole.

5. Establish management objectives in cooperation with the states when projects on NFS lands may have a significant effect on sensitive species population numbers or distributions. Establish objectives for Federal candidate species, in cooperation with the US Fish and Wildlife Service or National Marine Fisheries Service and the states.

A goal documented in the *Fishlake National Forest Land and Resource Management Plan* (USDA Forest Service 1986) is to "identify and improve habitat for sensitive, threatened, and endangered species, including participation in recovery efforts for both plants and animals." General direction in this plan states "Maintain habitat for viable populations of existing vertebrate species. Habitat for each species on the forest will be maintained by protecting at least 40 percent of the ecosystem for existing species. Proper juxtaposition of ecosystems must be considered. Do not allow activities that would negatively impact endangered, threatened, or sensitive plant or animal species."

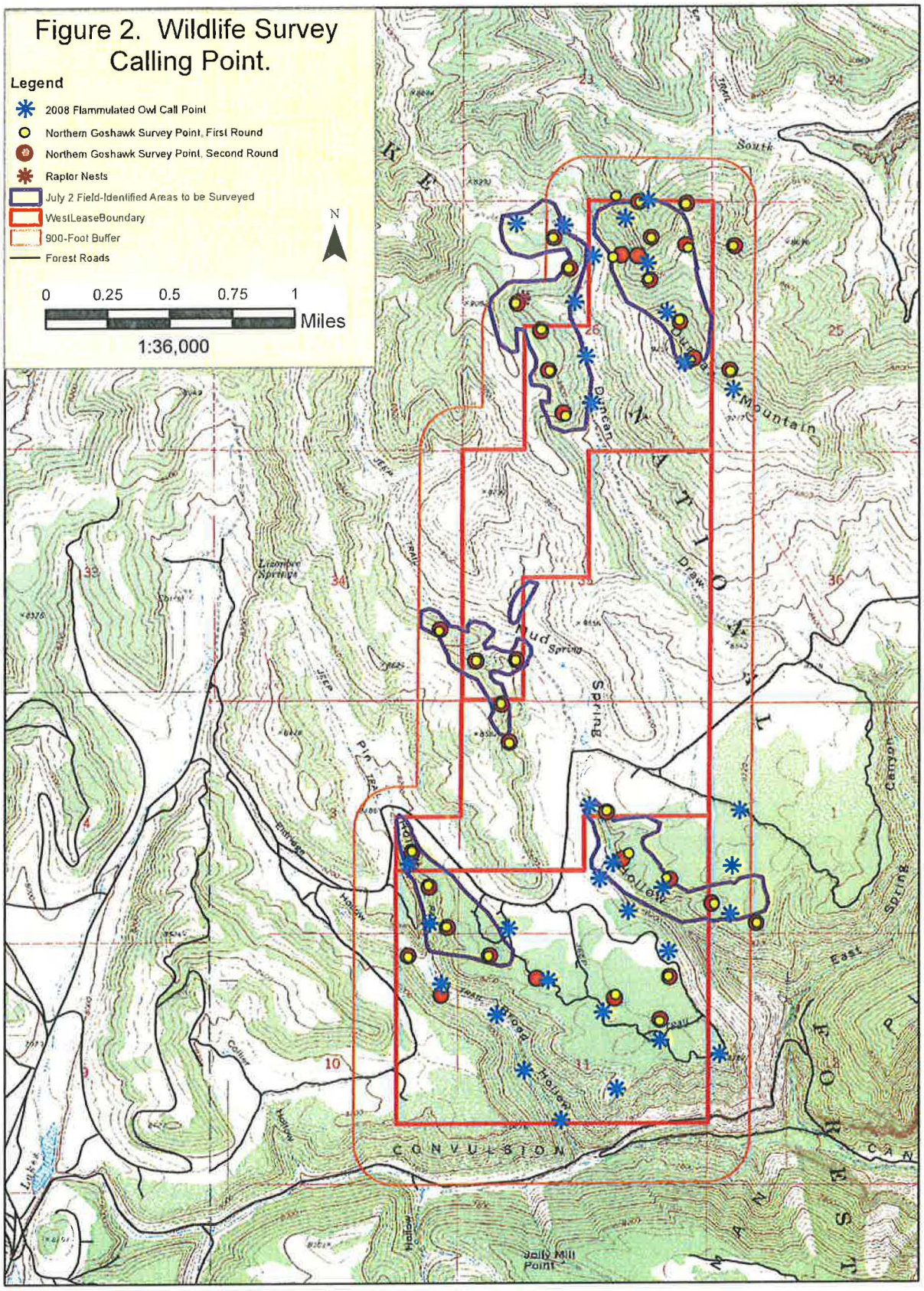
Figure 2. Wildlife Survey Calling Point.
Legend
2008 Flammulated Owl Call Point
Northern Goshawk Survey Point, First Round
Northern Goshawk Survey Point, Second Round
Raptor Nests
July 2 Field-Identified Areas to be Surveyed
WestLeaseBoundary
900-Foot Buffer
Forest Roads
N
0 0.25 0.5 0.75 1
Miles
1:36,000
South
Mountain
Duncan
Draw
Mud Spring
Spring
Canyon
East
Spring
Hollow
Broad Hollow
CONVULSION
Jolly Mill Point
Lizzie Springs
Pit
Trail
Jeep
Collier
Hollow
Lake

VI. DIRECT AND INDIRECT EFFECTS ON SENSITIVE SPECIES

The following section addresses the presence of R4 sensitive species and suitable habitat for these species in the project area and the potential for direct and indirect effects to these species from the proposed Arch West Coal Lease Modification program. A detailed description of the life history and habitat requirements for the sensitive species considered in this BE is available in the project record in the paper entitled: *Life History and Analysis of Endangered, Threatened, Candidate, Sensitive and Management Indicator Species of the Fishlake National Forest* (Rodriguez et al. 2006). Therefore, only abbreviated habitat descriptions for the sensitive species addressed in this analysis are presented below.

1. SPOTTED BAT

Baseline

Spotted bats roost alone in rock crevices high on steep cliff faces in a variety of vegetation communities, including desert scrub and pinyon-juniper. Little is known about their seasonal movements, but they are thought to migrate south for winter hibernation (Rodriguez et al. 2006). Some cliff and crevice habitat suitable for roosting may be present within and around the project area. Foraging habitat is also located within the project boundaries.

Direct and Indirect Effects

Direct impacts to spotted bats could potentially result from the proposed coal lease modifications. This would be due to cliff and escarpment areas weakening and eventually failing due to subsidence. This would impact potential and current roost sites. No ground-disturbing activities would occur that could potentially impact roosting habitat. Further, all activities will be conducted underground, so any foraging bats in the area would not be disturbed by mining operations. Finally, depending on project timing, some of the project work may occur later in the fall and later in the year after spotted bats have migrated south for winter hibernation. There are no expected indirect effects to the insect forage base that may occur by implementation of the proposed action as no vegetation would be removed and the only suspected impact would be some subsidence due to the mining underground..

2. TOWNSEND'S BIG-EARED BAT

Baseline

Townsend' big-eared bats roost singly or in small clusters during the winter in caves, mine shafts, and rocky outcrops. In the summer, they roost with their young at nursery sites. They inhabit a variety of vegetation communities, including pinyon-juniper forests and shrub-steppe grasslands. This bat species is sensitive to human disturbance and will abandon roost sites if disturbed. Townsend's big-eared bats were not detected on the Fishlake National Forest during survey efforts in 1994 and 1996, but an individual was found in an abandoned mine on the Forest in Millard County and other potential roosting habitat appeared to by used by this species (Rodriguez et al. 2006). Caves and tunnels preferred by this bat do could occur within the project area along rocky outcrops. Foraging habitat may also occur within the project boundaries.

Direct and Indirect Effects

Direct impacts to Townsend's big-eared bats could potentially result from the proposed coal lease modifications. This would be due to cliff and escarpment areas weakening and eventually failing due to subsidence. This would impact potential and current roost sites. All of the area would be mined from underground with no new above-ground support shafts, facilities, or utilities. No new surface-disturbing activities are expected to take place by implementation of the Proposed Action. There are no expected

indirect effects to the insect forage base that may occur by implementation of the proposed action as no vegetation would be removed and the only suspected impact would be some subsidence due to the mining underground.

3. Northern Goshawk

Baseline

Northern goshawks are a forest habitat generalist and typically utilize aspen or mixed conifer habitat for nesting in Utah. They winter in a variety of habitats, including pinyon-juniper communities. Goshawks prey on large-to-medium-sized birds and mammals, such as rabbits, squirrels, chipmunks, flickers, and jays.

Forty-four goshawk nests have been previously documented on the FLNF. This number can vary as a result of high winds and other natural events that can affect nests. The 44 known nests comprise 26 territories.

The West coal lease modification project would cover predominantly non-goshawk habitats such as riparian, pinion-juniper, mountain sage/perennial grass, and gambel oak habitats. However, the project area does include 394 acres of mixed conifer/aspen and 535 acres of ponderosa pine habitats which are suitable for nesting. Habitats comprised of ponderosa pine, aspen, and/or mixed conifer were targeted to be surveyed. Northern goshawks were called in aspen, mixed conifer, and ponderosa pine habitats

Surveys were completed in the designated habitat polygons for northern goshawk following accepted Forest Service survey protocols. The first round of northern goshawk calling was completed on July 2 and 3, 2008. The second round of northern goshawk calling was completed in on July 22 and 23, 2008. All surveys used of broadcast vocalizations from the calling points spaced. The territorial alarm call was broadcast during the first northern goshawk survey. The juvenile begging call was used for the second round of northern goshawk surveys

The results of the survey are recorded the wildlife geodatabase for the project. In summary, no responses were obtained during the surveys from northern goshawk and none were detected incidentally while in the project area. One stick nest in an aspen tree was located in Duncan Draw in a stand of large aspen trees. This nest appeared to have been tended this year, but was not active and there did not appear to have been a nesting attempt. The nest was possibly on the small side for a northern goshawk, but otherwise looked typical.

Direct and Indirect Effects

Because above-ground, surface-disturbing activities would be excluded from the project area and there would be no habitat alteration in northern goshawk habitat as a result of this project, there would be no direct effects to goshawks as a result of the project.

Indirect effects to the habitat of northern goshawk prey species through subsidence would be unlikely due to the fact that no habitat loss or modification would occur. Therefore impacts to prey populations or prey availability are not expected, and indirect impacts to goshawks would be minor to nonexistent.

4. FLAMMULATED OWL

Baseline

Flammulated owls appear to be associated with mature pine and mixed-conifer habitat types. In the West, they typically occur within the yellow pine belt, which includes ponderosa pine (*Pinus ponderosa*) and Jeffrey pine (*Pinus jeffreyi*). Flammulated owls have also been found in stands of fir (*Abies* spp.), Douglas fir (*Pseudotsuga menziesii*), and incense cedar (*Libocedrus decurrensen*). Undergrowth of oak/pine mix may be a required habitat component in some portions of its range. (Rodriguez et al 2006).

Flammulated owls are obligate secondary cavity nesters, and rely on previously excavated cavities in large diseased or dead trees for nest habitat. Possible limitations to this species include the availability of suitable habitat, which is decreasing due to logging of mature forest stands, and loss of prey associated with such practices). No inventory specific to the flammulated owl has been conducted forest-wide on the FLNF. A Mexican spotted/multi-species owl inventory conducted in 1992 did record flammulated owl vocalizations on the Loa Ranger District. To date no nests have been documented on the Fishlake. (Rodriguez et al 2006).

The West Coal Lease Modification Project would cover predominantly non-flammulated owl habitats such as riparian, pinion-juniper, mountain sage/perennial grass, and gambel oak habitats. However, the project area does include 394 acres of mixed conifer/aspen and 535 acres of ponderosa pine habitats which are suitable for nesting if snags or other cavity-nesting components are present. Habitats comprised of ponderosa pine, aspen, and/or mixed conifer were targeted to be surveyed. Flammulated owls were called in aspen, mixed conifer, and ponderosa pine habitats

Surveys were completed in the designated habitat polygons for flammulated owls following accepted Forest Service survey protocols. The first round of surveys was completed on July 1 and 2, 2008. All surveys used broadcast vocalizations from the calling points spaced throughout the habitat.

The results of the survey are recorded the wildlife geodatabase for the project. In summary, no responses were obtained during the surveys from flammulated owls and none were detected incidentally while in the project area. Several great horned owls were present in the Mud Springs Hollow area and were heard while completing the flammulated owl surveys.

Direct and Indirect Effects

Because above-ground, surface-disturbing activities would be excluded from the project area and there would be no habitat alteration in flammulated owl habitat as a result of this project, there would be no direct effects to the owls as a result of the project.

Indirect effects to the habitat of flammulated owl prey species through subsidence would be unlikely due to the fact that no habitat loss or modification would occur. Therefore impacts to prey populations or prey availability are not expected, and indirect impacts to the owls would be minor to nonexistent.

5. THREE-TOED WOODPECKER

Baseline

Three-toed woodpeckers are found in northern coniferous and mixed forest types located at elevations up to 9,000 feet and composed of Engelmann spruce, sub-alpine fir, Douglas fir, grand fir, ponderosa pine, tamarack, aspen, and lodgepole pine. This species is attracted to areas where there are numerous dead trees due to a fire, insect epidemic, blow-down, or other die-off. Nests are found in cavities located 3 to

50 feet above ground in spruce, tamarack, pine, cedar, and aspen trees. This species uses a variety of tree species for foraging; fire-killed trees appear to be preferred. (Rodriguez et al 2006).

The West coal lease modification project would cover predominantly non-woodpecker habitats such as riparian, pinion-juniper, mountain sage/perennial grass, and gambel oak habitats. However, the project area does include 394 acres of mixed conifer/aspen and 535 acres of ponderosa pine habitats which are suitable for nesting if snags or other cavity-nesting components are present. Habitats comprised of ponderosa pine, aspen, and/or mixed conifer were targeted to be surveyed. Three-toed woodpeckers were called in aspen, mixed conifer, and ponderosa pine habitats

Surveys were completed in the designated habitat polygons for three-toed woodpeckers following accepted Forest Service survey protocols. The first round of surveys was completed on July 22 and 23, 2008. All surveys used broadcast vocalizations from the calling points spaced throughout the habitat. The results of the survey are recorded the wildlife geodatabase for the project. In summary, no responses were obtained during the surveys from three-toed woodpeckers and none were detected incidentally while in the project area.

Direct and Indirect Effects

Because this species requires snags for feeding, perching, nesting, and roosting, it is threatened by activities such as logging and fire suppression, which remove or eliminate snags. Above-ground, surface-disturbing activities would not occur in the project area. There would be no habitat alteration in woodpecker habitat as a result of this project and no direct effects to the woodpeckers as a result of the project.

Indirect effects to the habitat of three-toed woodpecker prey species through subsidence would be unlikely due to the fact that no habitat loss or modification would occur. Therefore impacts to prey populations or prey availability are not expected, and indirect impacts to woodpeckers would be minor to nonexistent.

6. Greater Sage Grouse

Baseline

Sage grouse are dependent on sagebrush-dominated habitats. Sagebrush is an essential part of sage grouse brood habitat, nesting cover, and year-round diet. Open areas such as swales, irrigated fields, meadows, burns, roadsides, and areas with low, sparse sagebrush cover are used as leks. Leks are usually surrounded by areas with 20 to 50 percent sagebrush cover. (Rodriguez et al 2006).

The West coal lease modification project would cover predominantly non-grouse habitats such as pinion-juniper and gambel oak habitats. However, the project area does include 362 acres of Gambel oak/mountain big sage and 401 acres of mountain sage/perennial grass habitats which make up approximately 21 percent of the project area. The project area also includes 448.7 acres (12.8 percent) riparian habitat. This is an important component in sage grouse brood rearing and an important source of forbs which play a significant part of the diet of young grouse. The project has the possibility of impacting this riparian habitat in the project area.

As there are no perennial streams in the project area, the whole lease area could potentially be undermined including beneath seeps, springs, and intermittent streams containing riparian habitat. Riparian habitat with the greatest potential to be impacted is primarily located in the Pin Hollow and Mud Creek areas. There are also springs and seeps located in the Duncan Draw and Duncan Mountain area.

These areas are closest in the project area to the known Wildcat Knolls lek population at approximately 5.5 kilometers straight-line distance.

The greatest possibility for impacts to these species is through habitat modification. Mining could open tension cracks which could 1) heal naturally and not affect water flow, 2) divert water underground and discharge it at a different location that bypasses current riparian habitat which in effect removes that habitat, and/or 3) the water flows all the way down cracks into the mine and is lost from the surface. This third possible option would also divert water from the riparian areas which would dry it up and essentially remove it.

There are known populations of sage grouse on the Richfield and Loa Ranger Districts. Sage grouse have been documented on the south end of Monroe Mountain near the Hell's Hole and Forshea Mountain areas. Sage grouse have been documented using these areas in spring through winter with one documented lek. Sage grouse have also been documented on the lower Mytoge Mountain near the Forest boundary and also near Forsyth Reservoir near Highway 72. They have been documented during the summer months on the upper Mytoge, Sevenmile, and the Tidwell Slopes. More importantly, there is an active lek on the Manti-La Sal National Forest 4.3 kilometers from the project area. Although this straight-line distance crosses a major drainage that would be difficult for grouse to negotiate, going around the canyon to use the lek would not be difficult for a mobile species like the grouse either. Furthermore, it should be noted that during the field survey conducted for this project, no evidence of sage grouse use was found in sagebrush and wet meadow habitats in the project area.

Direct and Indirect Effects

Above-ground, surface-disturbing activities would not occur in the project area. There would be no habitat alteration in potential grouse habitat as a result of this project and no direct effects to the grouse as a result of the project.

Indirect effects to the habitat of greater sage grouse prey species through subsidence would be unlikely due to the fact that no habitat loss or modification would occur. Therefore impacts to prey populations or prey availability are not expected, and indirect impacts to grouse would be minor to nonexistent.

VII. CUMULATIVE EFFECTS

Past, present, and reasonably foreseeable activities within the cumulative effects area include private land development (subdivision construction activities), grazing, recreation, timber and thinning operations, reforestation and aerial seeding of burned areas, chaining, seeding of native and non-native species, natural and prescribed fire, pesticide application, noxious weed control, oil and gas exploration and development, and other special uses such as small mine claims, firewood and post cutting, municipal water developments, and irrigation diversion. Recreation-related activities include hunting, camping, day/picnic use, hiking, horseback riding, all-terrain vehicle and off-highway (ATV and OHV) use, and campground/roads/trails maintenance and development.

The proposed project is not expected to generate any cumulative impacts on spotted bat, Townsend's big-eared bat, northern goshawk, flammulated owl, three-toed woodpecker, or greater sage grouse because the project would impact neither these species nor their habitat. The cumulative impact would be non-existent because the proposed action would include no surface-disturbing activities and habitat would not be affected.

VIII. DETERMINATIONS AND RATIONALE

As a result of this evaluation, it is our professional determination that implementation of the West Coal Lease Modification **may adversely impact individuals of the following species but not likely to result in a loss of viability in the Planning Area, nor cause a trend toward federal listing**: spotted bat, Townsend's big-eared bat, and greater sage grouse or their habitats. The rationale for the **may impact** determination is noted below:

- Spotted bat current and potential roosting habitat could be impacted by weakening and failing cliffy habitat due to subsidence.

- Townsend's big-eared bat current and potential roosting habitat could be impacted by weakening and failing cliffy habitat due to subsidence.

- Although sage brush habitat will not be impacted, riparian habitat which is an important habitat type for sage grouse brood rearing has the potential to be affected. This habitat could be degraded, diverted, or lost entirely due to water being lost underground through subsidence cracks.

As a result of this evaluation, it is our professional determination that implementation of the West Coal Lease Modification will have **no impact** on northern goshawk, flammulated owl, and three-toed woodpecker, or their habitats. The rationale for the **no impact** determination is noted below:

- No surface-disturbing activities would occur with implementation of the proposed action. Thus, no nesting, roosting, or foraging habitat would be removed, altered, or disturbed. There will be no direct effects on any Forest Service sensitive species.

- The coal lease modification project would not result in indirect effects to the Forest Service sensitive species listed above. No surface-disturbing activities will occur and thus, the project will not impact the prey base or habitat for the prey base for these species.

IX. MITIGATION MEASURES AND MANAGEMENT RECOMMENDATION

The proposed project may adversely impact spotted bat, Townsend's big-eared bat, and greater sage grouse individuals or their habitat, but no mitigation measures or other management actions are recommended.

X. REFERENCES

Rodriguez, R.L, K. Rasmussen, M. Madsen, J. Whelan, S. Flinders, and D. Tait. 2006. Life History and Analysis of Endangered, Threatened, Candidate, Sensitive, and Management Indicator Species of the Fishlake National Forest. Version 4.1.

USDA Forest Service. 1986. Fishlake National Forest Land and Resource Management Plan. Richfield, UT.

USDA Forest Service (USFS). 2003. Intermountain Region Proposed, Endangered, Threatened, and Sensitive Species (12/03, technical edits 7/04); Known/Suspected Distribution by Forest.

USFS. 2007. Forest Service Vegetation Mapping. Fishlake National Forest, Richfield, Utah.

USFS. 2008. Draft Environmental Impact Statement for the Greens Hollow Coal Lease Tract. Manti-LaSal and Fishlake National Forests and DOI BLM Richfield, Utah Field Office.

Management Indicator (MIS) and Migratory Bird Species Report for the West Coal Lease Modification Environmental Assessment

RICHFIELD RANGER DISTRICT
FISHLAKE NATIONAL FOREST

Prepared by:

Cirrus Ecological Solutions, LC
965 South 100 West, Suite 200
Logan, UT 84321

Prepared for:

Fishlake National Forest
Richfield Ranger District
Richfield, UT 84701

Reviewed by:

Chris Colt, Wildlife Biologist, Richfield Ranger District

November 2008

MIS and Migratory Bird Species Report for the West Coal Lease Modification Environmental Assessment

Prepared By: /s/ *Tom Ashton* Date: November 2008

Tom Ashton, Wildlife Biologist, Cirrus Ecological Solutions, LC

Accepted By: _____ Date: _____

Chris Colt, Wildlife Biologist, Fishlake National Forest

TABLE OF CONTENTS

LIST OF TABLES

I. INTRODUCTION

This Management Indicator Species (MIS) and migratory bird species report analyzes the potential effects of West Coal Lease Modification proposal on MIS identified in the Fishlake National Forest (FLNF) Land Resource Management Plan (LRMP) - 1986 (see Table 1) and neo-tropical migratory bird (NTMB) species. The purpose of this report is to make a determination regarding the effects of the proposed action on the status of these species. Table 1 indicates the suitability of the analysis area for these MIS and the justification for eliminating those species with unsuitable habitat from further evaluation.

Table 1. Suitability of habitat for Fishlake National Forest Management Indicator Species.[1]

Species	Suitability of Habitat for Management Indicator Species	
	Suitable	Habitat Unsuitable Based on the Following
Elk	X	
Mule deer	X	
Northern Goshawk	X	
Cavity Nesters (hairy woodpecker, western bluebird, and mountain bluebird)	X	
Sage Nesters (Brewer's sparrow, vesper sparrow, and sage thrasher)	X	
Riparian Nesters (Lincoln's sparrow, yellow warbler, song sparrow, and MacGillivray's warbler)	X	
Bonneville Cutthroat Trout		X—No perennial streams or lakes are located in the project area.
Colorado River Cutthroat Trout		X—No perennial streams or lakes are located in the project area.
Resident Trout (rainbow, brown, brook, cutthroat, and lake)		X—No perennial streams are located in the project area.
Aquatic Macroinvertebrates	X	
Rydberg's Milkvetch		X—Associated with tertiary igneous gravels. Suitable habitat is not located in the project area.

[1]Habitat characteristics for each of the following species was reviewed and based on information found within Rodriguez et al. (2006).

The use of MIS to monitor habitats and associated species is described in Life History and Analysis of Endangered, Threatened, Candidate, sensitive, and Management Indicator Species of the Fishlake National Forest, Version 4.1 (Rodriguez et al. 2006).

Because population trend is best addressed at a much larger scale than the project level, data from organizations such as the Division of Wildlife Resources, the Nature Conservancy (NatureServe Explorer), and the United States Geological Survey, Breeding Bird Survey (BBS) were used in the discussions on trend. For far ranging species such as elk that can range across multiple forest boundaries and land ownerships, broad scale data were obtained from the Division of Wildlife Resources, Southern Region (Rodriguez et al. 2006).

II. DESCRIPTION OF THE PROPOSED ACTION

The FLNF and Bureau of Land Management (BLM) and have received an application to modify Lease U-63214 and a request for revision of application to modify Leases SL-062583 and U-47080, SUFCO Mine, from Ark Land Company (Ark), the land holding company for Arch Coal, Inc. (Arch). The modification and revisions would extend SUFCO mining operations beneath NFS lands administered by the FLNF, Richfield Ranger District in Sevier County, Utah (Figure 1). The mining lease would be administered by the BLM, Price Field Office. Activities on Federal public land would require approval by the BLM and the USFS for lands under their respective jurisdictions. If approved, the FLNF Supervisor would approve mining beneath NFS land. The BLM would issue a lease modification for potential mining. The proposed lease modifications are adjacent to SUFCO's existing mining operations.

The Forest Service and BLM propose to modify Federal Coal Lease U-63214 to add approximately 640 acres of coal to this lease. The proposed modification to this federal coal lease involves adding coal reserves to be recovered by underground mining methods. The legal description of the proposed modification area is Township 21 South, Range 4 East, Salt Lake Base and Meridian, Section 26 (NE; SE; E2SW) and Section 35 (NW; W2SW). The proposed lease modification would allow for the development and recovery of Federal coal using longwall mining methods.

The Forest Service and BLM also propose to revise previous applications to modify Leases SL-062583 and U-47080 totaling 880 acres and 796 acres. These leases also propose adding coal reserves to be recovered by underground mining methods. The revised legal description for Lease SL-062583 is Township 22 South, Range 4 East, Salt Lake Base and Meridian, Section 2 (SE; S2SW), Section 3 (SESE), Section 10 (E2NE; NESE), and Section 11 (N2; N2S2). The revised legal description for Lease U-47080 is Township 21 South, Range 4 East, Salt Lake Base and Meridian, Section 35 (NE; SE; E2SW) and Township 22 South Range 4 East, Salt Lake Base and Meridian, Section 2 (Lots 1; 2; 3; 4; S2NW; S2NE; N2SW), and Section 3 (NESE). The proposed lease modification would allow for the development and recovery of Federal coal using longwall mining methods.

Ark proposes to minimize impacts to sensitive resource values by incorporating environmental protection measures into the Proposed Action and implementing necessary mitigation measures required by the decision maker. No roads, trails, power transmission lines, or above ground mining facilities would be constructed for this project. Other than subsidence of the mined area, it is expected that there will be no surface impacts resulting from implementation of the Proposed Action.

III. CUMULATIVE EFFECTS AREA

The cumulative effects area (CEA) for the sensitive vertebrate species that will be analyzed in this document includes the Richfield Ranger District and adjacent area in the Ferron Ranger District of the Manti-La Sal National Forest where another coal mine proposal (Greens Hollow) is under environmental review (Cirrus 2008c). This area was selected on the basis of continuity and

adjacency with habitat found in the project area and includes known or predicted spring, summer, and/or fall use by the species analyzed within this document.

IV. DESCRIPTION OF AFFECTED SPECIES

Information concerning life histories, suitable habitats, threats, ecology, and summarized population trend/monitoring information for the management indicator species of the Fishlake National Forest can be found in the *Life History and Analysis of Endangered, Threatened, Candidate, Sensitive, and Management Indicator Species of the Fishlake National Forest, Version 4.1* (Rodriguez et al. 2006). A copy of this document is located in the Richfield Ranger District Office in Richfield, Utah.

V. EFFECTS OF THE PROPOSED ACTION

ELK AND MULE DEER

Although elk and particularly mule deer may be found within the project area year-round, the predominantly (32.2 percent) pinion-juniper/mountain sagebrush habitat primarily represents fall/winter/spring habitat, depending on the severity of the winter. The Forest Service portion of the project area has been mapped as substantial winter range for elk and crucial winter range for mule deer. Wintering is a critical period for big game, especially during severe winters with deep snow and/or cold temperatures. Critical winter range use has been designated as December 1 to April 15 and restrictions are placed on activities during this time frame.

Table 2 shows UDWR's herd unit containing FLNF land and the status of deer and elk populations along with the proportion of winter habitat within the herd unit which occurs within the Forest boundary.

Table 2. Deer and elk status for the big game unit in the project area.

	Deer		Elk	
Units	**Herd Objective**	**Actual Herd Numbers**	**Herd Objective**	**Actual Herd Numbers**
Central Mountains/Manti	38,000	26,600	12,000	10,000

Source: UDWR 2006.

Direct and Indirect Effects

Direct effects of the project on deer and elk are not expected due to the nature of the Proposed Action. Although implementation of the Proposed Action would occur throughout the year, no surface-disturbing activities are proposed to take place. Work would occur during critical winter range use timeframes when animals may be present in the project area. However, elk and deer would not experience displacement. This is because neither work crews nor machinery would move through the area above ground. Habitat disturbance from mining and coal removal would also not occur as crews would work solely underground.

As stated above, no clearing and limbing of vegetation would take place, so it is expected that there would be no impact to forage availability, cover, or thermal cover, based on the level of

impact associated with the Proposed Action. Shrubs and herbaceous species in the project area would not experience trampling, removal, or any foreseeable disturbance within the lease modification footprint.

Cumulative Effects

Past, present, and reasonably foreseeable activities (discussed below) may affect elk and mule deer. However, because there would be no direct and indirect effects of the proposed project, it would not generate cumulative impacts or adversely affect population numbers or viability of these species and managed herd sizes.

Past, present, and reasonably foreseeable activities within the cumulative effects area include grazing, recreation, timber and thinning operations, reforestation and aerial seeding of burned areas, chaining, sage brush treatments for increased/improved grouse habitat, seeding of native and non-native species, natural and prescribed fire, pesticide application, noxious weed control, energy resources exploration and development, and other special uses including firewood and post cutting. Recreation-related activities include hunting, camping, day/picnic use, hiking, horseback riding, all-terrain vehicle and off-highway (ATV and OHV) use, and campground/roads/trails maintenance and development. Grazing, chaining, seeding, fires, timber operations, irrigation diversion/development, and noxious weed control has altered riparian and upland vegetation composition and densities, which has reduced habitat for elk and mule deer in some cases and created habitat in others. Habitat improvement projects (i.e. seeding, pinyon/juniper chainings and thinnings, prescribed burning, and water developments) across the Forest have helped to increase the elk population since 1986 (Rodriguez et al. 2006). Recreational activities and recreational infrastructure (roads, trails, structures, and campground development) may contribute to elk and mule deer habitat fragmentation, habitat loss, air pollution, audio and visual disturbance, and other disturbances caused by wildlife/public interactions.

NORTHERN GOSHAWK

The northern goshawk is listed on the sensitive species list for the Intermountain Region (R4), USDA Forest Service. Goshawk populations on the FLNF fluctuate within reproductive seasons, and from season to season. Over the past several years, the 26-goshawk territories across the forest have experienced a decline in nesting activity and occupancy (Rodriguez et al. 2006). Direct, indirect, and cumulative effects to this species are analyzed and disclosed in the Biological Evaluation (BE) prepared for the West Coal Lease Modification EA (Cirrus 2008b). For a complete analysis of effects to the northern goshawk, please refer to the BE for Sensitive Species found in the project file (Cirrus 2008b).

SAGE NESTERS (BREWER'S SPARROW, VESPER SPARROW, AND SAGE THRASHER)

Sage nesters are represented by Brewer's sparrow, vesper sparrow, and sage thrasher. Brewer's sparrow populations across the FLNF are stable to slightly up and are viable; vesper sparrow populations are stable or slightly up in trend and likely viable across the forest; and sage thrasher populations are apparently viable on the Forest (Rodriguez et al. 2006). For more information regarding monitoring information, trends, ecology, threats, etc. for these species, refer to *Life History and Analysis of Endangered, Threatened, Candidate, sensitive, and Management Indicator Species of the Fishlake National Forest, Version 4.1* (Rodriguez et al. 2006).

Direct and Indirect Effects

The project area predominantly contains habitat not suitable for sagebrush obligate MIS. However there are mountain sagebrush/perennial grass and Gambel oak/mountain big sagebrush-dominated openings in the aspen and conifer forest habitats. These areas account for 11.4 (400.9 acres) and 10.3 (362.4 acres) percent of the total project area respectively or 21.7 percent combined (763.3 acres).

Brewer's sparrow, Vesper sparrow, and sage thrasher populations and population trends would not be affected by the proposed coal lease modification because the sagebrush habitat would not be altered. No sagebrush plants would be removed and neither the sage community nor composition would be altered in any way by the Proposed Action. This is because no surface-disturbing impacts are expected from implementation of the Proposed Action. No special restrictions or requirements to protect bird nests that may occur within the project area are required and it is not necessary for a biologist to clear the area for bird nests prior to work. Underground work taking place during the nesting season would present no risk of losing nests because nesting birds within the project area would not experience any disturbance from the action.

Cumulative Effects

Past, present, and reasonably foreseeable activities (discussed below) may affect Brewer's sparrow, vesper sparrow, and sage thrasher. However, because there would be no direct and indirect effects of the proposed project, it would not generate cumulative impacts or adversely affect population numbers or viability of these species.

Past, present, and reasonably foreseeable activities within the cumulative effects area include grazing, recreation, timber and thinning operations, reforestation and aerial seeding of burned areas, chaining, sage brush treatments for increased/improved grouse habitat, seeding of native and non-native species, natural and prescribed fire, pesticide application, noxious weed control, energy resources exploration and development, and other special uses including firewood and post cutting. Recreation-related activities include hunting, camping, day/picnic use, hiking, horseback riding, all-terrain vehicle and off-highway (ATV and OHV) use, and campground/roads/trails maintenance and development. Grazing, chaining, seeding, fires, timber operations, irrigation diversion/development, and noxious weed control has altered riparian and upland vegetation composition and densities, which has reduced habitat for elk and mule deer in some cases and created habitat in others. Habitat improvement projects (i.e. seeding, pinyon/juniper chainings, mulchings and thinnings, prescribed burning, and water developments) across the Forest have focused on increasing sage grouse habitat, but in turn have also created additional and improved habitat for sage nesting MIS (Rodriguez et al. 2006). Recreational activities and recreational infrastructure (roads, trails, structures, and campground development) may contribute to habitat fragmentation, habitat loss, air pollution, audio and visual disturbance, and other disturbances caused by wildlife/public interactions.

CAVITY NESTERS (HAIRY WOODPECKER, WESTERN BLUEBIRD, AND MOUNTAIN BLUEBIRD)

Cavity nesters are represented by hairy woodpecker, western bluebird, and mountain bluebird. Hairy woodpecker and western bluebird populations are stable and viable while the mountain bluebird population trend is stable to slightly up and viable on the Fishlake National Forest (Rodriguez et al. 2006). For more information regarding monitoring information, trends, ecology, threats, etc. for these species, refer to *Life History and Analysis of Endangered,*

Threatened, Candidate, sensitive, and Management Indicator Species of the Fishlake National Forest, Version 4.1 (Rodriguez et al. 2006).

Direct and Indirect Effects

Suitable habitat for cavity nesters occurs in the aspen and conifer forest, particularly in the mature stands where snags are more common. The project area includes 11.2 percent (394.3 acres) of mixed conifer/aspen, 15.3 percent (535.2 acres) of ponderosa pine/curl-leaf mahogany/manzanita, and 7.9 percent (276.8 acres) of aspen/perennial grass which could potentially be suitable habitat for cavity-nesting MIS. This accounts for a total of 34.4 percent of the project area, or 1,206.3 acres.

Hairy woodpeckers, western bluebirds, and mountain bluebirds and their habitat would be unaffected by the proposed coal lease modification because the project would not alter the habitat and tree removal would not be required for mining operations. No cavity-nesting habitat would be removed and neither the aspen or conifer communities nor composition would be altered in any way by the Proposed Action. This is because no surface-disturbing impacts are expected from implementation of the Proposed Action. No special restrictions or requirements to protect bird nests that may occur within the project area are required and it is not necessary for a biologist to clear the area for bird nests prior to work. Underground work taking place during the nesting season would present no risk of losing nests because nesting birds within the project area would not experience any disturbance from the action.

Cumulative Effects

Past, present, and reasonably foreseeable activities (discussed below) may affect hairy woodpecker, western bluebird, and mountain bluebird populations. However, because there would be no direct and indirect effects of the proposed project, it would not generate cumulative impacts or adversely affect population numbers or viability of these species.

Past, present, and reasonably foreseeable activities within the cumulative effects area include grazing, recreation, timber and thinning operations, reforestation and aerial seeding of burned areas, chaining, sage brush treatments for increased/improved grouse habitat, seeding of native and non-native species, natural and prescribed fire, pesticide application, noxious weed control, energy resources exploration and development, and other special uses including firewood and post cutting. Recreation-related activities include hunting, camping, day/picnic use, hiking, horseback riding, all-terrain vehicle and off-highway (ATV and OHV) use, and campground/roads/trails maintenance and development. Grazing, chaining, seeding, fires, timber operations, irrigation diversion/development, and noxious weed control has altered riparian and upland vegetation composition and densities, which has reduced habitat for elk and mule deer in some cases and created habitat in others. Recreational activities and recreational infrastructure (roads, trails, structures, and campground development) may contribute to habitat fragmentation, habitat loss, air pollution, audio and visual disturbance, and other disturbances caused by wildlife/public interactions.

Riparian Nesters (Lincoln's sparrow, yellow warbler, song sparrow and MacGillivray's warbler)

The riparian nesting species are represented by Lincoln's sparrow, yellow warbler, song sparrow, and MacGillivray's warbler. Lincoln's sparrow populations are stable and likely viable on the Fishlake National Forest (Rodriguez et al. 2006). Yellow warbler populations are in an upward trend and likely viable on the Fishlake National Forest (Rodriguez et al. 2006). Song sparrow

populations are likely stable or in a slightly downward trend, but probably still viable on the Fishlake National Forest (Rodriguez et al. 2006). MacGillivray's warbler populations are stable or perhaps in an upward in trend on the Fishlake National Forest (Rodriguez et al. 2006). For more information regarding monitoring information, trends, ecology, threats, etc. for these species, refer to *Life History and Analysis of Endangered, Threatened, Candidate, sensitive, and Management Indicator Species of the Fishlake National Forest, Version 4.1* (Rodriguez et al. 2006).

Direct and Indirect Effects

Riparian habitat in the project area is spotty and minimal. The project area contains no perennial streams to support healthy, complex riparian habitats. NFS vegetation mapping lists 448.7 acres or 12.8 percent of the project area as riparian habitat. Not all of this habitat is suitable for riparian-nesting MIS as much of it is in small, fragmented blocks, does not contain proper vegetation structure, and/or has become increasingly drier and does not support riparian vegetation. Most wet areas contain low-volume seeps and springs with a small wetland vegetation component primarily made up of *Carex* species and other sedges. There are a few locations within the project area that could support riparian nesting birds with vegetation consisting of alder and willow species as tall as 15 feet. However, these areas represent habitat features as opposed to habitat types and are small in both number as well as size. Most of these areas are isolated from each other and do not extend for more than a few hundred yards.

Lincoln's sparrow, yellow warbler, song sparrow, and MacGillivray's warbler populations could be affected by the proposed lease modification. As there are no perennial streams in the project area, the whole lease area could potentially be undermined including beneath seeps, springs, and intermittent streams containing riparian habitat. Riparian habitat with the greatest potential to be impacted that is suitable for riparian nesting MIS is primarily located in the Pin Hollow and Mud Creek areas. There are also springs and seeps located in the Duncan Draw and Duncan Mountain area that may contain suitable habitat for riparian-nesting MIS.

The greatest possibility for impacts to these species is through habitat modification. Mining could open tension cracks which could 1) heal naturally and not affect water flow, 2) divert water underground and discharge it at a different location that bypasses current riparian habitat which in effect removes that habitat, and/or 3) the water flows all the way down cracks into the mine and is lost from the surface. This third possible option would also divert water from the riparian areas which would dry it up and essentially remove it.

Cumulative Effects

Past, present, and reasonably foreseeable activities (discussed below) may affect Lincoln's sparrow, yellow warbler, song sparrow, and MacGillivray's warbler. However, because the direct and indirect effects of the proposed project would be minimal, the proposed project would add minimally, if at all, to these effects and would not generate cumulative impacts or adversely affect population numbers or viability of these species.

Past, present, and reasonably foreseeable activities within the cumulative effects area include private land development, grazing, recreation, timber and thinning operations, reforestation and seeding of burned areas, chaining, seeding of native and non-native species, fire suppression, natural and prescribed fire, pesticide application, noxious weed control oil and gas exploration and development, and other special uses such as mining, hydroelectric operations, firewood and post cutting, municipal water developments, and irrigation diversion. Recreation-related activities include hunting, camping, day/picnic use, hiking, horseback riding, ATV and OHV use,

and campground/roads/trails maintenance and development. Grazing, chaining, seeding, fires, timber operations, irrigation diversion/development, and noxious weed control has altered riparian and upland vegetation composition and densities, which has reduced habitat for Lincoln's sparrows, yellow warblers, and song sparrows in some cases and created habitat in others. Impacts to be created by the proposed Greens Hollow coal lease project will also add cumulatively to the riparian habitat impacts in the area. The effects, to riparian habitat and the MIS it supports, of that Proposed Action will be outlined in its own environmental review. Water manipulation, weather factors, and pesticide use within the cumulative effects area has likely affected these species. Recreational activities and recreational infrastructure (roads, trails, structures, and campground development) may contribute to riparian habitat fragmentation, habitat loss, creation of travel corridors, air pollution, audio and visual disturbance, and other disturbances caused by wildlife/public interactions.

MACROINVERTEBRATES

The Aquatic Macroinvertebrate Biotic Condition Index (BCI) provides a quantitative measure of aquatic health due to overall watershed condition, land management activities, and natural disturbances. The BCI trend for the 16-year period from 1986 to 2002 for the Fishlake National Forest is down slightly after peaking in the late 1980's, with a generally static trend since the early 1990's (Rodriguez et al. 2006). The BCI trend on the Richfield Ranger District is consistent with the entire forest.

For more information regarding monitoring information, trends, ecology, threats, etc. for macroinvertebrates, refer to *Life History and Analysis of Endangered, Threatened, Candidate, sensitive, and Management Indicator Species of the Fishlake National Forest, Version 4.1* (Rodriguez et al. 2006).

Direct and Indirect Effects

Stream habitat within the project area is limited to intermittent stretches of streams in Duncan Draw, Mud Spring Hollow, and Pin Hollow/Broad Hollow. There are no perennial streams located in the project area. The project may have negligible adverse impacts to macroinvertebrate habitat, but would not likely result in a trend away from the desired condition based on the small amount of wet habitat which would be disturbed. The greatest possibility for impacts to macroinvertebrate MIS is through habitat modification. Mining could open tension cracks which could 1) heal naturally and not affect water flow, 2) divert water underground and discharge it at a different location that bypasses current macroinvertebrate habitat which in effect removes that habitat, and/or 3) the water flows all the way down cracks into the mine and is lost from the surface. This third possible option would also divert water from the habitat which would dry it up and essentially remove it.

Cumulative Effects

Past, present, and reasonably foreseeable activities (discussed below) may affect macroinvertebrates. However, because the direct and indirect effects of the proposed project would be minimal, the proposed project would add minimally, if at all, to these effects and would not generate cumulative impacts or adversely affect to population numbers or viability of these species.

Past, present, and reasonably foreseeable activities within the cumulative effects area include introduction of native and non-native fish species, fish stocking, private land development, grazing, recreation, timber and thinning operations, reforestation and seeding of burned areas,

chaining, seeding of native and non-native plant species, fire suppression, natural and prescribed fire, pesticide application, noxious weed control, oil and gas exploration, and other special uses such as mining, hydroelectric operations, firewood and post cutting, municipal water developments, and irrigation diversion. Recreation-related activities include hunting, fishing, camping, day/picnic use, hiking, horseback riding, ATV and OHV use, and campground/roads/trails maintenance and development. The introduction of non-native fish, stocking of hatchery fish, grazing, fires, fire management activities (drafting water from streams/lakes), timber/thinning operations, energy development, irrigation diversion/development, and noxious weed control has altered riparian and upland vegetation composition and densities and riparian environments, which has reduced the BCI scores and habitat for macroinvertebrate populations in most cases but has increased BCI scores and habitat in a few others.

Water manipulation, drought, hydroelectric/municipal water development, mining activities, fishing, and introduction of non-native fish within the cumulative effects area have likely affected macroinvertebrates. Erosion, water manipulation (streamflows), and increased sediment are major factors affecting potentially suitable habitats for macroinvertebrate populations. This Proposed Action would not contribute to erosion and increased sediment delivery to the riparian areas because there would be no ground disturbance. The project would not introduce or contribute to these impacts within the cumulative effects area.

MIGRATORY BIRDS

The Migratory Bird Treaty Act of 1918 protects all migratory birds and their parts. This Act is the domestic law that affirms, or implements, the United States' commitment to four international conventions (with Canada, Japan, Mexico, and Russia) for the protection of a shared migratory bird resource. Each of the conventions protect migratory birds that are common to both countries (i.e., they occur in both countries at some point during their annual life cycle).

Under the Act it is unlawful to take, import, export, possess, buy, sell, purchase, or barter any migratory bird. Feathers or other parts, nests, eggs, and products made from migratory birds are also covered by the Act. Take is defined as pursuing, hunting, capturing, trapping, or collecting.

Executive Order 13186, signed on January 10, 2001, directs Federal agencies to evaluate the effects of actions and agency plans on migratory birds, with emphasis on species of concern. The most recent list of migratory bird species of concern was delineated by the FWS in *Birds of Conservation Concern 2002* (USFWS 2002). In *Birds of Conservation Concern 2002* (USFWS 2002), the migratory bird species of concern are delineated within separate Bird Conservation Regions (BCR's) in the United States. The project area would cross BCR 16 (Southern Rockies/Colorado Plateau) on lands administered by the Fishlake National Forest. There are 29 species of concern listed for this BCR (Appendix A).

Direct and Indirect Effects

Potential effects to three of these species of concern have been analyzed in the Biological Assessment (Cirrus 2008a) and Biological Evaluation (Cirrus 2008b) prepared for this project. The species already addressed include the candidate for federal listing yellow-billed cuckoo, and Forest Service Region 4 sensitive species peregrine falcon and flammulated owl. The effects of the coal lease modification to the other species of concern would be the same as the effects to sage nesting, and cavity nesting species disclosed in this report if foraging, nesting, and/or breeding habitat occurs in the project area; no impacts to these species or their habitat are likely

to occur from the implementation of the preferred alternative. One other potential impact not discussed earlier could be the impact of subsidence on escarpment and cliff-nesting species. Weakening of cliffs and escarpments which eventually fail could impact cliff-nesting habitat or nests currently in use on cliffs. The BE prepared for this project determined that habitat was not present for the peregrine falcon, but other species such as prairie falcons and golden eagles could experience these unlikely impacts. In short, effects to NTMBs would be limited to potential rock falls from subsidence and loss of riparian nesting habitat due to the potential loss of water by underground diversion.

Cumulative Effects

Past, present, and reasonably foreseeable activities (discussed below) may affect migratory birds. However, because the direct and indirect effects of the proposed project would be minimal, the proposed project would add minimally, if at all, to these effects and would not generate cumulative impacts or adversely affect population numbers or viability of these species.

Past, present, and reasonably foreseeable activities within the cumulative effects area include private land development, grazing, recreation, timber and thinning operations, reforestation and seeding of burned areas, chaining, seeding of native and non-native species, fire suppression, natural and prescribed fire, pesticide application, noxious weed control, oil and gas exploration and development, and other special uses such as mining, hydroelectric operations, firewood and post cutting, municipal water developments, and irrigation diversion. Recreation-related activities include hunting, camping, day/picnic use, hiking, horseback riding, ATV and OHV use, and campground/roads/trails maintenance and development. Grazing, chaining, seeding, fires, timber operations, irrigation diversion/development, and noxious weed control has altered riparian and upland vegetation composition and densities, which has reduced habitat for migratory birds in some cases and created habitat in others. Water manipulation, weather factors, and pesticide use within the cumulative effects area has likely affected migratory birds. Recreational activities and recreational infrastructure (roads, trails, structures, and campground development) may contribute to habitat fragmentation, habitat loss, creation of travel corridors, air pollution, audio and visual disturbance, and other disturbances caused by wildlife/public interactions.

VI. COMPLIANCE WITH MANAGEMENT DIRECTION

This process has served to review the effects of implementing the Arch Coal Inc.'s West Coal Lease Modification project on management indicator species and migratory birds of the Fishlake National Forest. Adverse impacts to these species would be unlikely due to the minimal impact of the project on individual species or their habitat and lack of surface-disturbing impacts.

VII. DETERMINATION

It is my professional determination that implementation of the proposed Arch Coal Inc. West Coal Lease Modification project may affect riparian-nesting MIS and neo-tropical migratory birds, aquatic macroinvertebrates, cliff-nesting species, and/or their habitat but would not adversely affect population numbers or trends or the viability of these species. This project would not affect elk and deer, northern goshawks, sage nesters, cavity nesters, most migratory bird species listed in BCR 16 (non-riparian and cliff nesting species), Bonneville cutthroat trout, or resident trout populations or population trends.

VIII. LITERATURE CITED

Cirrus (Cirrus Ecological Solutions). 2008a. Biological Assessment for the Arch Coal Inc. West Coal Lease Modification. Prepared for the Fishlake National Forest, Richfield Ranger District, Richfield, UT. September.

Cirrus. 2008b. Biological Evaluation for the Arch Coal Inc. West Coal Lease Modification. Prepared for the Fishlake National Forest, Richfield Ranger District, Richfield, UT. September.

Cirrus, 2008c. Draft Greens Hollow Environmental Impact Study. Prepared for the Manti-LaSal and Fishlake National Forests and DOI BLM Richfield, Utah Field Office. November.

Rodriguez, R.L, K. Rasmussen, M. Madsen, J. Whelan, S. Flinders, and D. Tait. 2006. Life History and Analysis of Endangered, Threatened, Candidate, Sensitive, and Management Indicator Species of the Fishlake National Forest. Version 4.1.

UDWR (Utah Division of Wildlife Resources). 2006. Utah Big Game Annual Report. Utah Division of Wildlife Resources. Publication No. 07-22.

USFWS (U.S. Fish and Wildlife Service). 2002. Birds of conservation concern 2002. Division of Migratory Bird Management, Arlington, Virginia. 99 pp. [online version available at http://migratorybirds.fws.gov/reports/bcc2002.pdf]

IX. CONTRIBUTORS

This report was prepared by Tom Ashton and John Stewart, Cirrus Ecological Solutions, Logan, Utah. It was reviewed by Chris Colt, Wildlife Biologist, Richfield Ranger District, Fishlake National Forest.

APPENDIX A.
BIRD CONSERVATION REGION 16

BCR 16 (SOUTHERN ROCKIES/COLORADO PLATEAU) BCC 2002 LIST.

Northern Harrier
Swainson's Hawk
Ferruginous Hawk
Golden Eagle
Peregrine Falcon
Prairie Falcon
Gunnison Sage-grouse
Snowy Plover
Mountain Plover
Solitary Sandpiper
Marbled Godwit
Wilson's Phalarope
Yellow-billed Cuckoo
Flammulated Owl
Burrowing Owl
Short-eared Owl
Black Swift
Lewis's Woodpecker
Williamson's Sapsucker
Gray Vireo
Pinyon Jay
Bendire's Thrasher
Crissal Thrasher
Sprague's Pipit
Virginia's Warbler
Black-throated Gray Warbler
Grace's Warbler
Sage Sparrow
Chestnut-collared Longspur

THIS COMPLETE COPY of the REPORT IS INCLUDES IN VOLUME 3, APPENDIX IVA

A reference to the location of the report is included in the text of Chapter 3 where it is specified as the reference area to be used for the Sinkhole.

The selected pages from the report are included for ease of review.

Copy of Complete Report Located in Volume 3
Waste Rock Disposal Site, Appendix IVA

Vegetation & Sensitive Species of the Proposed Expansion at the Waste Rock Site

for the
SUFCO Mine

in
Sevier County, Utah

Coal truck passing the SUFCO Waste Rock Study Area

Prepared by

MT. NEBO SCIENTIFIC, INC.
330 East 400 South, Suite 6
P.O. Box 337
Springville, Utah 84663
(801) 489-6937

Patrick D. Collins, Ph.D.

for

CANYON FUEL COMPANY, LLC
SUFCO MINE
597 South SR 24
Salina, Utah 84654

February 2014

Table of Contents

Introduction

Proposed Disturbance

Engineers at SUFCO have been planning to expand the mine's current Waste Rock Site to augment their coal mining operations in Sevier County, Utah. Prior to construction and disturbance to the existing plant communities within the boundaries of the expansion area, quantitative data were recorded to provide information about the baseline conditions of the vegetation.

Revegetation Success Standards

As required by applicable state and federal regulations, once a mining-related activity has run the course of its use and function, the site and land disturbances associated with it are subsequently reclaimed and revegetated. The restored plant communities must then achieve specific revegetation success standards. These standards are frequently derived by comparing similar plant communities, often adjacent to those being proposed for disturbance. These analogous communities, called the *reference areas*, are also quantitatively sampled prior to disturbance. The datasets of the areas are then compared to demonstrate their similarities (or differences). If they are approved as reference areas, the communities will again be compared to determine whether or not the restored communities meet specific revegetation success standards following final reclamation.

This document reports the results of sampling in the proposed disturbed areas of the expansion area as well as the reference areas for the Waste Rock Site. In addition, threatened, endangered and sensitive plant species were surveyed and addressed in the document.

Methods

Quantitative Sampling

Sample methods used for this study were performed in accordance with the vegetation guidelines supplied by the State of Utah, Division of Oil, Gas and Mining (DOGM). Quantitative and qualitative data were recorded within the plant communities proposed for disturbance and their respective reference areas in September 2013 (see Map 1 at the end of the report). The GPS coordinates for all sample areas are provided below.

GPS COORDINATES FOR SAMPLE AREAS FOR THE EXPANSION AREAS AT SUFCO'S WASTE ROCK SITE
(UTM, ZONE 12S, NAD 27)

Sample Area	Waypoint Name	Coordinates (m)	Community Type
A	SufWRSa	456113E 4305344N	Proposed Disturbed Sagebrush/Grass
B	SufWRSb	456408E 4305366N	Proposed Disturbed Sagebrush/Grass
C	SufWRSc	456356E 4305728N	Proposed Disturbed Sagebrush/Grass
D	SufWRSd	456189E 4305526N	Proposed Disturbed Sagebrush/Grass
E	SufWRSe	456179E 4305389N	Proposed Disturbed Rabbitbrush/Sagebrush
F	SufWRSf	456014E 4305471N	Proposed Disturbed Rabbitbrush/Sagebrush
G	SufWRSg	456636E 4305351N	Proposed Disturbed Mountain Brush
H	SufWRSh	456490E 4305436N	Proposed Disturbed Mountain Brush
I	SufWRSi	456379E 4305675N	Proposed Disturbed Mountain Brush
J	SufWRSj	456472E 4305694N	Proposed Disturbed Mountain Brush
K	SufWRSk	456197E 4305198N	Sagebrush/Grass Reference Area
L	SufWRSl	456231E 4305209N	Rabbitbrush/Sagebrush Reference Area
M	SufWRSm	456371E 4305195N	Mountain Brush Reference Area

Sampling Design & Transect/Quadrat Placement

Vegetation sample transect lines were placed randomly within the boundaries of the proposed disturbed and reference areas. The transect placement technique was employed with the goal to adequately sample a representation of the entire site. Once the transects were established, quadrat locations for sampling were chosen using random numbers on the transect lines with the objective to record data without preconceived bias. The following data were then recorded.

Cover & Composition

Cover estimates were made using ocular methods with meter-square quadrats. Species composition, cover by species, and relative frequencies were also assessed from the quadrats. Additional information recorded on the raw data sheets were notes such as: slope, exposure, grazing use, disturbance and/or other appropriate notes. Plant species nomenclature follows *A Utah Flora* (Welsh et al., 2008).

Woody Species Density

Density of woody plant species for the proposed disturbed and reference areas were estimated using the point-quarter distance method. In this method, random points were placed on the sample sites and measured into four quarters. The distances to the nearest woody plant species were then recorded in each quarter. The average point-to-individual distance was equal to the square root of the mean area per individual. The number of individuals per acre was the end result of the calculations.

Sample Size & Adequacy

Sampling adequacy for cover and density was attempted by using the formula given below.

$$nMIN = \frac{t^2 s^2}{(dx)^2}$$

where,

nMIN	= minimum adequate sample
t	= appropriate confidence t-value
s	= standard deviation
x	= sample mean
d	= desired change from mean

With the values used for "t" and "d" above, the goal was to meet appropriate sample adequacy values.

Statistical Analyses

Student's t-tests were employed to compare the total living covers and total woody species densities of the proposed disturbed areas with their respective reference areas.

Photographs

Color photographs of the sample areas were taken at the time of sampling and have been submitted with this report.

Threatened, Endangered & Sensitive Species

Prior to recording quantitative data on the plant communities, a sensitive plant species survey was conducted. To initiate the studies in the area, database searches and literature reviews were conducted for potential plant species that are known to be rare, endemic, threatened, endangered or otherwise sensitive in the general area. Additionally, the current list of federally protected species for Sevier County, Utah was reviewed along with potential habitats for these species in the areas proposed for disturbance.

Results

Proposed Disturbed Sagebrush/Grass Community

The Sagebrush/Grass Community was found in several areas within the Waste Rock Expansion site. Accordingly, sample transects were placed in several locations of this community throughout the study area [Sample Areas A, B, C, D (Map 1)]. As a method to more accurately represent all areas of the community, the datasets of all Sagebrush/Grass sample areas were combined for the summary tables.

Sagebrush/Grass (a collection of photographs of the sample areas later in the document)

The most common species by cover and frequency in this community, by far, were big sagebrush (*Artemisia tridentata* var. *tridentata*) and bluebunch wheatgrass (*Elymus spicatus*). Percent cover of big sagebrush was 19.88%, and its frequency value showed it occurred in 75.00% of the sample quadrats. Percent cover and frequency of bluebunch wheatgrass were 19.38% and 85.00%, respectively. These values, as well as the results for all other species encountered in the samples, are shown in Table 1.

The total living cover in the Sagebrush/Grass areas was estimated at 69.13%, where 68.00% of it came from understory and only 1.13% from overstory cover (Table 2-A). Composition of the combined data indicated that 53.57% of the understory cover were shrubs, 39.32% grasses

and 7.11% forbs (Table 2-B).

The total woody species density for the Sagebrush/Grass Community was estimated at 3,448 plants per acre. The most important species for this parameter by quite a wide margin was big sagebrush, however, other important woody species included snowberry (*Symphoricarpos oreophilus*), viscid rabbitbrush (*Chrysothamnus viscidiflorus*), Vasey's sagebrush (*Artemisia tridentata* var. *vaseyana*) and bitterbrush (*Purshia tridentata*). Density values for all species have been provided on Table 3.

Sagebrush/Grass Reference Area

The reference area chosen to represent future revegetation success standards [Sample Area K (Map 1)] was also dominated by many of the same species as the proposed disturbed area described above. Big sagebrush and bluebunch wheatgrass were again the clear dominates by cover and frequency and were nearly equally represented; the former had a cover and frequency of 21.83% and 76.67% and the latter 22.67% and 86.67%, respectively. For a list of all species found in the samples refer to Table 4.

Sagebrush/Grass Reference Area

The total living cover for this reference area was estimated at 67.67% (Table 5-A). Composition of the total living cover was calculated at 47.57% grasses, 44.08% shrubs and 8.35% forbs (Table 5-B).

Total density of woody species was estimated at 2,944 individuals per acre – the most common were big sagebrush, followed distantly by snowberry, Vasey's sagebrush, viscid rabbitbrush and bitterbrush (Table 6).

Table 4: Waste Rock Site Expansion Areas at the SUFCO Mine. Cover and Frequency by Plant Species (2013).

Sagebrush/Grass Reference Area Sample Area: K			n=30
	Mean Percent	**Standard Deviation**	**Percent Frequency**
TREES & SHRUBS			
Artemisia tridentata var. tridentata	21.83	15.99	76.67
Artemisia tridentata var. vaseyana	2.00	7.48	6.67
Chrysothamnus viscidiflorus	1.00	5.39	3.33
Mahonia repens	1.00	2.00	20.00
Symphoricarpos oreophilus	4.17	9.04	23.33
FORBS			
Cirsium sp.	2.83	4.22	36.67
Eriogonum racemosa	2.00	3.32	30.00
Lupinus argenteus	0.67	2.13	10.00
GRASSES			
Agropyron cristatum	5.17	11.22	26.67
Bromus inermis	0.33	1.80	3.33
Elymus elymoides	0.67	3.59	3.33
Elymus spicatus	22.67	13.15	86.67
Poa secunda	3.33	7.11	20.00

Table 5: Waste Rock Site Expansion Areas at the SUFCO Mine. Total Cover and Composition (2013).

Sagebrush/Grass Reference Area Sample Area: K		n=30
A. TOTAL COVER	**Mean Percent**	**Standard Deviation**
Total Living Cover	67.67	8.83
Litter	21.33	6.94
Bareground	8.63	7.39
Rock	2.37	1.87
B. % COMPOSITION		
Shrubs	44.08	17.89
Forbs	8.35	8.41
Grasses	47.57	18.94

Table 6: Waste Rock Site Expansion Areas at the SUFCO Mine. Woody Species Density (2013).

Sagebrush/Grass Reference Area Sample Area: K	n=30
SPECIES	**Individuals/Acre**
Artemisia tridentata var. tridentata	2305.84
Artemisia tridentata var. vaseyana	220.77
Chrysothamnus viscidiflorus	171.71
Purshia tridentata	24.53
Symphoricarpos oreophilus	220.77
TOTAL	**2943.62**

Summary & Discussion

Quantitative sampling has been conducted in those plant communities that have the potential of being impacted by construction of proposed expansion areas of SUFCO's Waste Rock Site. Additionally, similar plant communities outside the expansion area were also sampled with the goal to find appropriate revegetation success standards when the site is reclaimed in the future. These communities are called *reference areas.*

Statistical comparisons between the means of the proposed disturbed and reference areas (Figures 1 through 6), suggested that nearly all differences were non-significant. When the

mean **total living covers** for the Proposed Disturbed Sagebrush/Grass, Rabbitbrush/ Sagebrush and Mountain Brush Communities were compared with their reference areas, there were no statistically significant differences. This suggests that the reference areas chosen may be appropriate to be used for revegetation success standards for living cover at the time of final reclamation.

Additionally, when statistics were used to make comparisons to their respective reference areas, the mean total **woody species densities** of the Proposed Disturbed Sagebrush/Grass and Mountain Brush Communities had differences were also non-significant. The one exception was that the total density of the Proposed Disturbed Sagebrush/Rabbitbrush Community was significantly greater than its reference area. As mentioned, these communities were probably not in their native condition – they have been somewhat altered by previous activities unrelated to mining. State R645 regulations require lands previously disturbed "*and that are remined by or otherwise redisturbed by coal mining and reclamation operations, at a minimum the vegetative cover will be not less than the ground cover that existed before redisturbance and will be adequate to control erosion*". A discussion regarding this site as well as other suggestions for revegetation success standards are provided below.

Because they match so closely, it seems appropriate that the reference areas could be used for final revegetation success standards for total living cover values. Regarding the woody species densities, however, it has been suggested at other future reclamation sites that perhaps the high woody species density values in some of the native plant communities are a result of domestic livestock and wildlife grazing pressure which often selects for the herbaceous species over the woody plants. Consequently, after consultations with the DWR biologists, sometimes less woody species density values may provide more opportunity for increased forb and grass species establishment that could provide greater species diversity in the summer range for the resident wildlife species as well as domestic livestock. Consequently, a pre-set woody species value of 2,000 plants per acre may be a more appropriate recommendation for a revegetation standard for the proposed disturbed Rabbitbrush/Sagebrush as well as the Sagebrush/Grass sites at the Waste Rock Site. Subject

to approval by biologists from the State of Utah, Division of Oil, Gas and Mining (DOGM), revegetation success standards for each area are shown on Table 20.

Table 20: Summary of revegetation recommended success standards for the expansion area of the Waste Rock Site at the SUFCO Mine.

PROPOSED DISTURBED AREA	COVER	DENSITY	DIVERSITY
Sagebrush/Grass	Sagebrush Reference Area	2,000 plants/acre	Sagebrush Reference Area
Rabbitbrush/Sagebrush	Rabbitbrush/Sagebrush Reference Area	2,000 plants/acre	Rabbitbrush/Sagebrush Reference Area
Mountain Brush	Mountain Brush Reference Area	Mountain Brush Reference Area	Mountain Brush Reference Area

Finally, with relation to the success standards described above, there is one very important consideration for final reclamation and revegetation planning – this is the final post-mining topography. If the final slopes, aspects and elevations deviate greatly from the current, pre-disturbance topography (and they probably will), thought should be given to what community types and the extent of them should be created at specific locations on the reclaimed land.

Color Photographs of the Sample Areas

Proposed Disturbed Sagebrush/Grass Community

Sample Area A

Sample Area B

Sample Area C

Sagebrush/Grass Reference Area

Sample Area K

Sample Area K

Sample Area K

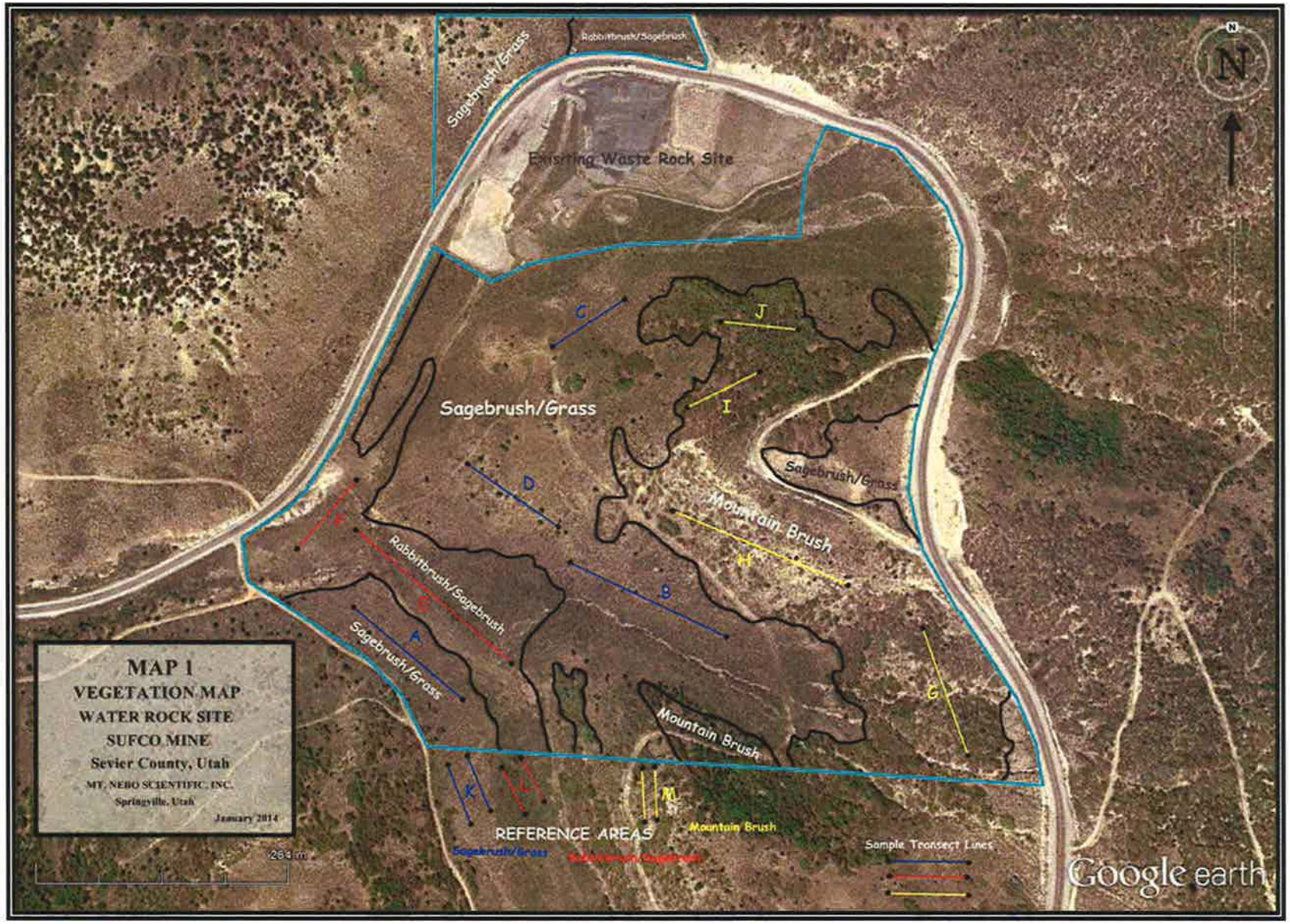
MAP 1
VEGETATION MAP
WATER ROCK SITE
SUFCO MINE
Sevier County, Utah
MT. NEBO SCIENTIFIC, INC.
Springville, Utah
January 2014
Existing Waste Rock Site
Sagebrush/Grass
Rabbitbrush/Sagebrush
Mountain Brush
REFERENCE AREAS
Sample Transect Lines
A
B
C
D
E
F
G
H
I
J
K
L
M
N
Google earth

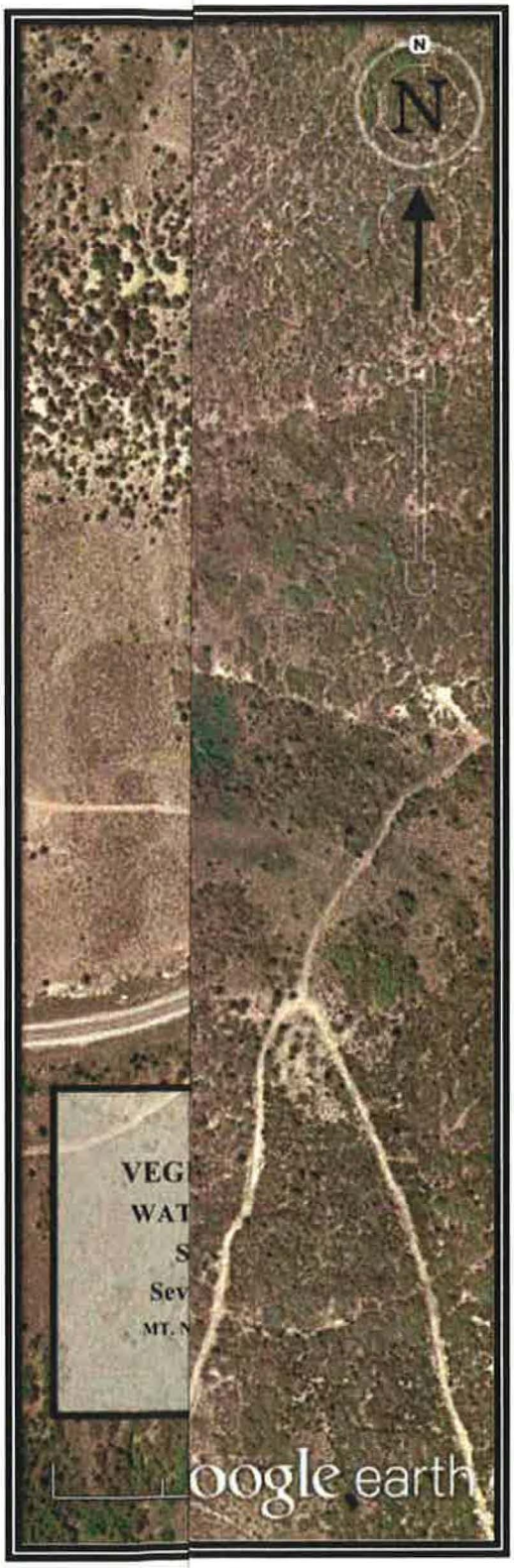

CHAPTER 4

LAND USE AND AIR QUALITY

roads/transportation corridors are generally single-lane native surface forest development and maintenance roads which are passable during the drier months of the year. The roads are classified by the Forest as Level 2 roads and generally no restrictions are placed on these roads for public use. The Forest does recommend the use of high clearance vehicles for most of the roads in the SITLA Muddy Tract area and to avoid use when the road surfaces are wet. However, if the permittee is using the roads for other than periodic monitoring, special use permits must be obtained from the Forest. Many of the forest development roads connect with local roads that access major highways.

In the late 1970s two Roadless Area Review and Evaluation (RARE) II areas within the SITLA Muddy Tract region were inventoried. Neither area was designated as wilderness, nor were they classified as roadless or semi-primitive recreation management areas under the 1986 Forest Plan Revision (Pines Tract Project EIS, 1999). Recent re-inventories (July 2004) of Roadless Areas by the Manti LaSal National Forest as part of their Forest Plan Revision to be completed by the end of 2006 have included nearly all of the SITLA Muddy Tract as potentially "roadless". This designation excludes the existing Forest Development Roads 044, 2033, and 010 that lie within the eastern and northern portions of the SITLA Muddy Tract. Only a small segment of land west and north of the Main Fork of Box Canyon and western SITLA Muddy Tract boundary, east of Forest Road 044, and south of the southern boundary of sections 2, 3, and 4 of T 21 S., R 5 E., SLM is identified as not being included in the proposed roadless area. Currently, the Forest typically administers most of the areas identified as having "roadless" characteristics as though the areas were officially accepted as roadless. This action is being taken to preserve, where possible, unroaded characteristics of portions of the Forest.

The SITLA Muddy Tract area is part of the Emery C&H grazing allotment. The SITLA Muddy Tract unit supports 1,387 head of cattle during the early grazing season. Three ponds for livestock and wildlife use have been developed in the SITLA Muddy Tract area.

The limited amount of perennial water within the analysis area reduces the potential for many species of fish to be present. However, Muddy Creek and the lower portion of Box Canyon Creek support fish populations.

There are no oil or gas leases associated with the SITLA Muddy Tract area.

Cultural and Historic Resources Information. Cultural resource information and maps identifying cultural and historical study areas are located in Appendix 4-2. An intensive cultural resource evaluation of five coal exploration well locations has been conducted on the Quitchupah Lease by Dr. Richard Hauck of AERC (see Appendix 4-2). As part of this evaluation he also made

a record search at the State Historic Preservation office and the National Register of Historic Places. No sites were found that would be effected by the drilling activity. A ten percent cultural resource potential survey was completed by Les Sikle, Forest Archeologist, Manti-La Sal National Forest. A copy of his report is included in Appendix 4-2 along with the Utah State Historical Society's concurrence letter.

An intensive cultural resource evaluation of a proposed breakout, substation and power line in the Link Canyon Locality conducted by Dr. Richard Hauck of AERC is included in Appendix 4-2. No cultural or paleoentological resources were observed within the proposed Link Canyon development area during the archaeological survey.

A cultural resource evaluation of the Link Canyon Mine portals area in Link Canyon was conducted by John Senulis of Senco-Phoenix. A copy of his report is included in Appendix 4-2. The conclusion of his evaluation of the portal site was that no cultural or paleoentological resources are present. Many of his conclusions were based on work previously performed in the immediate portal area and surrounding areas by Dames and Moore, AERC, JBR, and the BLM.

There are no cemeteries, public parks, historic places, or areas within the boundaries of any units of the National System of Trails or the Wild and Scenic Rivers System located in areas to be affected by the SUFCO Mine (See Appendix 4-6 for a description). The Applicant agrees, however, to notify the regulatory authority and the Utah State Historical Society of previously unidentified cultural resources discovered in the course of mining operations. The Applicant also agrees to have any such cultural resources evaluated in terms of National Register of Historic Places eligibility criteria. Protection of eligible cultural resources will be in accordance with regulatory authority and Utah SHPO requirements. The Applicant will also instruct its employees that it is a violation of federal and state laws to collect individual artifacts or to otherwise disturb cultural resources.

150 Acre Incidental Boundary Change

Cultural and Historic Information. Cultural resource information and maps identifying cultural and historical study areas are located in Appendix 4-2. Dr. Richard Hauck of AERC conducted an intensive evaluation of the 150 acre IBC. Four new sites were discovered and recorded during the evaluation. All the sites are located on or near the east rim of Box Canyon. The sites include two significant rock shelters (42SV 2492 and 42SV 2495), a significant ceramic scatter (42SV 2493), and a non-significant kill-butchering locus (42SV 2494).

> Site 42 SV 2492 - The site consists of a rock shelter. This site is considered to be a significant resource and excellent potential for National Register classification. The site is 15 meter wide with a sandstone arched roof and is susceptible to surface subsidence.

Site 42 SV 2493 - The site consists of ceramic scatter occupying an area of 20 to 30 meters on the bedrock top at the canyon rim. This site is considered to be a significant resource and has the potential for National Register classification. This site is not considered to be at-risk or susceptible to surface subsidence.

Site 42 SV 2494 - The site consists of a dispersed scatter of debris and lithic tool fragments and is situated on the bedrock on the east rim overlooking Box Canyon. This site is not considered to be a significant resources and lacks potential for National Register classification.

Site 42 SV 2495 - The site consists of a scatter of debris primarily on the north facing slope below the base of a shallow shelter under a sandstone ledge. The site is considered to be a significant resource and has limited potential for National Register classification. This site is not considered to be at-risk or susceptible to surface subsidence.

The Applicant agrees, however, to notify the regulatory authority and the Utah State Historical Society of previously unidentified cultural resources discovered in the course of mining operations. The Applicant also agrees to have any such cultural resources evaluated in terms of National Register of Historic Places eligibility criteria. Protection of eligible cultural resources will be in accordance with regulatory authority and Utah SHPO requirements. The Applicant will also instruct its employees that it is a violation of federal and state laws to collect individual artifacts or to otherwise disturb cultural resources.

Pines Tract Area

Cultural and Historic Information. Cultural resource information and maps identifying cultural and historical study areas are located in Appendix 4-2. Dr. Richard Hauck of AERC made a record search at the State Historic Preservation office, National Register of Historic Places and conducted field investigations under state project numbers UT-96-AF-0443f and UT-97-AF-0598f. AERC coordinated the research and field investigations with SHPO.

Information concerning the potential of specific sites as to being either in the subsidence zone or out of the zone or being evaluated or unevaluated is contained in the Memorandum of Agreement between Federal and State agencies.

The monitoring, treatment plans and mitigation of the cultural resource sites will be in accordance with the Memorandum of Agreement (MOA) 00-MU-11041000-017, and any amendment to it, between the USFS - Manti-La Sal, USHPO, the Advisory Council on Historic Places, UDOGM, and the SUFCO Mine located in Appendix 4-5.

Sufco intends to undermine portions of the East Fork of Box Canyon beginning in the Fall of 2003 as they extract coal from the 3LPE and 4LPE longwall panels. This change in the mining plan will change the required monitoring schedule in accordance with the Memorandum of Agreement for site 42SV2430/ML-3446 - Elusive Peacock which will be undermined under the 3LPE longwall panel. In accordance with pages 11-12 of the MOA the required monitoring schedule of this site will change from Monitor Schedule A (Sites in areas that will be mined using full-support methods) to Monitor Schedule B (Sites in areas which will be mined under and subsided) requiring the implementation of additional monitoring of the site. Monitoring results will be provided in DOGM Annual Reports. (2003, 2004, 2005, 2006, and indefinitely until movement ceases)

Historic properties documented in the Pines Tract area include 42SV2424, a sawmill, and site 42SV2391 a complex of trash scatters. Both sites are considered ineligible for the NRHP.

The Applicant agrees, however, to notify the regulatory authority and the Utah State Historical Preservation Office (SHPO) of previously unidentified cultural resources discovered in the course of mining operations. The Applicant also agrees to have any such cultural resources evaluated in terms of National Register of Historic Places eligibility criteria.

Muddy Creek Coal Tract Area

Cultural and Historic Information. Cultural resource information and maps identifying cultural and historical study areas are located in Appendix 4-2. Cirrus Ecological Solutions, LC conducted an intensive evaluation of the Muddy Tract Area. Thirty-four sites were documented during the evaluation. Refer to Confidential Appendix 4-2, "Muddy Creek Technical Report, Heritage Resources".

The three sites located in the SITLA Muddy Tract lease area are located on or near the east rim of Box Canyon. The sites include two significant lithic scatters (42SV2554 and 42SV2597), and a non-significant lithic scatter (42SV2594). None of these three sites will be undermined under the present mine plan.

The Applicant agrees, however, to notify the regulatory authority and the Utah State Historical Preservation Office (SHPO) of previously unidentified cultural resources discovered in the course of mining operations. The Applicant also agrees to have any such cultural resources evaluated in terms of National Register of Historic Places eligibility criteria.

Results from USDA Manti-La Sal National Forest, Price Ranger District, Project #ML-02-1033, Utah State Project #U-02-MM-0311f, s, b, p

Site #	Site Type	Evaluation (Cirrus Ecological Solutions, LC)	Undermined/potential for impact by mining	Date Surveyed
42SV2584*	LS, RS,C	Significant	No/Not expected	1966(PI 1976)
42SV2596	LS, RS	Non-significant	No/Not expected	1966(PI 1976)
42SV2597	LS	Non-significant	No/Not expected	1966
42SV2554	LS	Significant	No/Not expected	1966
42SV2492	LS	Non-significant	No/Not expected	1966

LS - Lithic Scatter RS- Rock Shelter C-Ceramics
* Re-recorded on IMACS form, lumped ML#s 2281 and 2282 with this.

Site 42SV2584 and 42SV2596 lie within the boundary of the SITLA lease expansion (Section 32, T 20 S, R 5 E). According to a report prepared for the Manti-La Sal Forest by Cirrus Ecological Solutions, LC, site 42SV2584 is considered significant, while 42SV2596 is considered non-significant. In the current Sufco five year mine plan no mining is planned beneath either location and they do not lie within the angle-of-draw (Plate 5-10A), therefore no impact is anticipated to either site. Should the mine plan change where the eligible site could be impacted, the permittee will coordinate with DOGM and the USFS prior to mining.

Sites 42SV2584 and 42SV2596 were reevaluated by USFS archeologist in 2015. On 11/20/15, SHPO concurred with the USFS recommendation that site 42SV2584 be determined eligible and 42SV2596 be determined not eligible. A copy of the SHPO concurrence letter is located in Appendix 4-2 (Confidential) of the M&RP.

West Coal Lease Modification Areas

Cultural and Historic Information. Cultural resource information and maps identifying cultural and historical study areas are located in Appendix 4-2 in the Confidential folder of the M&RP. EarthTouch, Inc. conducted an intensive evaluation of the West Coal Lease Modification Areas.

The results of the cultural resource inventory for the project resulted in the identification of 15 cultural resource sites, which included three previously recorded sites (42SV1301, 42SV1386 and 42SV2688), and 12 new sites (42SV3207-3215 and 42SV3246-3248). Overall, the identified cultural resource sites consist of small- to moderate-sized lithic scatters and small rock shelters/overhangs, some with associated pictographs. Of the 15 sites identified within the West Coal Lease Modification Areas, six sites are recommended eligible for the National Register of Historic Places. These sites include 42SV3209, 42SV3211, 42SV3212, 42SV3213, 42SV3247 and

42SV3248 which consist of small rock shelters and rock shelters with pictographs. Site 42SV3209 will be the only site undermined under the present mine plan. This shelter is more of a terrace overhang that extends 6 meters long, with a 1.5 meter overhang or width.

2RWL Sinkhole - In 2016 an additional cultural resource review/inventory was performed by Tetra Tech a consulting firm, for the area of the sinkhole. The inventory included information from the EarthTouch report previously mentioned and from other previously prepared reports. A copy of the inventory results have been included in Appendix 4-2. Within the inventory area, no cultural resources had been recorded. Thus, no impacted were anticipated during the repair of the sinkhole. Clearance for the repair of the sinkhole was give by SHPO from documentation prepared by Tetra Tech and Jessica Montcalm of the Division of Oil, Gas and Mining. The area of the sink hole is part of the West Lease Modification Area previously permitted in 2011. An EA prepared for the West Lease Modification is located in Appendix 3-13.

South Fork of Quitchupah Area of 2R2S Block "A" and 3R2S Block "B"

Cultural and Historic Information. Cultural resource information and maps identifying cultural and historical study areas are located in Appendix 4-2 in the Confidential folder of the M&RP. Canyon Environmental conducted an evaluation of the South Fork of Quitchupah in and adjacent to the 2R2S Block "A" panel Area.

The results of the cultural resource inventory for the project resulted in the identification of 4 cultural resource sites, which included one previously recorded site (42SV2690), and 3 new sites (42SV3462, 42SV3463 and 42S3464). Overall, the identified cultural resource sites consist of lithic scatters and a small rock shelter/overhang. Of the 4 sites identified within the South Fork of Quitchupah Area, two sites are recommended eligible for the National Register of Historic Places.

CHAPTER 5

ENGINEERING

LIST OF APPENDICES

(Appendices appear in Volume 6)

5.20 Operation Plan

5.2.1 General

5.2.1.1 Cross Sections and Maps

Previously Mined Areas. Plate 5-1 shows the location and extent of known workings of active, inactive, or abandoned underground workings, including openings to the surface, within the permit and adjacent areas. No previously surface-mined areas exist within the permit area.

Existing Surface and Subsurface Facilities and Features. Plates 5-2A,2B,2C,2D,2E,2F and 5-5 depicts the following information:

- All buildings in and within 1000 feet of the permit area, including an identification of the current use of the buildings,
- The location of surface and subsurface features within, passing through, or passing over the permit area, including major electric transmission lines and pipelines (no agricultural drainage tile fields exist within the permit area),
- Each public road located in or within 100 feet of the permit area,
- The location of the waste-rock disposal area, and
- The location of each sedimentation pond within the permit area (there are no permanent water impoundments within the permit area),
- The location and features of the repaired sinkhole are shown in Appendix 5-13.

Tipple Building was modified in 2008 to widen the tipple building sump to accommodate the use of a larger loader to collect coal fines when the Tipple Building is being cleaned. This allows a loader to collect the coal fines from the Tipple Building cleanup and put them on the coal storage pile preventing them from being washed through the mine yard. Design and cross sections of the Tipple Building Modification are provided on Figures 5-0C and 5-0D.

To facilitate the separation of rock from coal, a rock chute will be attached to the Tipple Building, with a steel girder in a concrete pier (2' X 2' Approx.) atop a spread footing (3' X 3' X 1' Approx.) providing additional stability. The rock exiting the chute will drop into a rock bin constructed of pre-cast 3'X3'x6' concrete blocks. The diagrams of the rock chute structure and rock bin are located in Appendix 5-11. The location of the rock chute footings and rock bin is used for coal storage, preparation and coal loading, making the salvage of topsoil or subsoil unlikely. Excavated material not of a quality to be placed in the coal pile will be hauled and placed with the waste rock.

Landowner, Right-of-Entry, and Public Interest. Plate 5-6 shows the boundaries of lands and the names of present owners of record of those lands, both surface and subsurface, included in or

control, or minimize subsidence and subsidence-related damage. The location of the waste-rock disposal area in relation to the underground mine workings, is discussed in Volume 3 of this M&RP.

Land Surface Configuration. Slope measurements for undisturbed areas adjacent to disturbed areas associated with the mine are shown on Plate 5-2A&B. Surface facilities at the site have been in existence since 1941. Pre-mining topographic maps do not exist. Therefore, the slope measurements shown on Plate 5-2A&B are considered generally indicative of original land slopes in the vicinity of the mine.

2RWL Sinkhole - A mitigation plan for the repair of a sinkhole located on Lease U-47080 is located in Appendix 5-13. An Environmental Assessment UT-070-08-083 was prepared in January 2009 for the West Coal Lease Modification for the BLM and Fishlake National Forest where the sinkhole is located. A copy of the assessment if located in Appendix 3-13. The sinkhole is with the West Lease Modification Areas permitted in 2011.

The area of the sinkhole was undermined within Lease U-47080 in December 2015. The sinkhole feature has previously occurred naturally in the area, but this is the first hole to occur during longwall mining. It is suspected that mining-related subsidence triggered this collapse into an existing cavity within the fault zone close to the surface. Previously, exploration drilling has encountered voids that were interpreted as limited zones of open fractures.

The depth of overburden in the area is 890 feet, at that depth, at mid-panel, subsidence has the potential of 5 - 6 feet. The sinkhole was approximately 41' wide, 64' long and 40' deep. It was assumed in this case that there was a large open cavity near the surface, that opened when mining occurred in 2015. Refer to Section 5.20 for reclamation information.

Surface Facilities. Plates 5-2A,B,C,D,E,&F and Figure 5-0E shows the locations of the following surface facilities:

- Buildings, utility corridors, and facilities to be used,
- The area of disturbance at the mine mouth,
- Coal storage and loading facilities,

- Non-coal (non-waste rock) storage areas, and
- Explosive storage and handling facilities.
- Portal sites.

The remaining area of land to be affected by mining and reclamation operations is at the waste-rock site. The area of land to be affected at the waste-rock site is shown on maps provided in Volume 3 of this M&RP. The disturbed areas shown on Plates 5-2A,B,C,D,&E and the waste-rock area surface facility maps are the same as the land areas for which a performance bond or other guarantee has been posted.

Locations of topsoil stockpiles are shown on Plates 5-2A, 5-2B and in Volume 3 (Map 2). No coal processing waste banks, dams, or embankments exist in the permit area. Similarly, no spoil or coal preparation waste sites exist in the permit area. Sediment that is periodically removed from the sedimentation ponds will be disposed of at the waste-rock disposal site.

General refuse that is generated on site is stored at the location indicated on Plate 5-2A. This waste consists predominantly of old brattice cloth, ventilation tubing, broken timbers, wire, broken machinery parts, paper, cardboard, and miscellaneous garbage. This non-hazardous, non-toxic, non-coal, non-waste rock refuse is disposed of periodically at the Sevier County Landfill. The agreement with the Sevier County Landfill for disposal of this refuse is provided in Appendix 5-3.

Transportation Facilities. Roads that have been constructed, used, or maintained by SUFCO Mine in the permit area for the mining and reclamation operations are shown on Plate 5-2A&B. No rail systems or overland conveyor systems (other than the material-handling conveyors in the mine yard) are associated with the permit area. Drainage structures associated with the roads are presented in Section 7.5.2.2. Cross sections of the roads are provided on Plate 5-9.

Several draw angle surveys have been performed at the mine over the past fourteen years. These surveys have been oriented both parallel and perpendicular to the long axis of the panel. Data collected over continuous-miner areas to date indicate that the average draw angle is 15 degrees. Individual measurements over continuous-miner areas have ranged from 10 to 21 degrees. New longwall draw angle data obtained in 1995 indicates an angle of 15 degrees for the longwall areas. Draw angle study completed in 1999 over 13L4E LW panel indicates 15 degrees is valid. Summary results of the LW panel studies are shown in Figures 5-0A and 5-0B.

Tension cracks have occurred over most of the subsidence areas. These cracks tend to be most pronounced in areas where pillars have been extracted (as compared to areas overlying longwall panels). The lengths of the cracks vary from a few feet to nearly 200 feet. Most are oriented either parallel to the natural jointing pattern or parallel to the boundaries of the underground excavation. Cracks with the longest continuous length appear to be natural joints which have been intensified by subsidence action. Vertical displacement along the cracks is uncommon and horizontal displacement varies from hairline to several inches in width. Follow-up observations of individual tension cracks indicate that the cracks tend to close (either partially or fully) following initial development (see Appendix 5-4).

Monitoring data collected to date indicate that subsidence above the SUFCO Mine occurs rapidly after initial movement. Approximately 80 percent of maximum subsidence occurs within about four months. The remainder of subsidence occurs slowly over a period of a few years. These monitoring data have been presented and summarized annually in reports submitted to the UDOGM by SUFCO Mine. Refer to to Appendix 5-13 for description of 2RWL repaired sinkhole, Section 5.2.1.1 and Section 5.4.1.1 provide additional information.

5.2.5.1 Subsidence Control Plan

Potential Areas of Subsidence. Structures that are present above the existing or planned mine workings that may be affected by mining are shown on Plate 5-5. Renewable resource lands within the lease and permit areas are shown on Plate 4-1.

5.40 Reclamation Plan

5.4.1 General

5.4.1.1 Commitment

Upon the permanent cessation of coal mining and reclamation operations at the SUFCO Mine, SUFCO Mine will close, backfill, or otherwise permanently reclaim all affected areas in accordance with the R645 regulations and this reclamation plan.

2RWL Sinkhole - Mimicking natural sinkhole features in the area, the permittee accomplished the reclamation of the sinkhole with the following steps.

Temporary access to the hole was made from FR007 to the hole; topsoil was removed from the perimeter of the existing hole and stockpiled for immediate replacement; the sandstone on the interior of the hole was broken up and pushed towards the hole's center; the hole was graded to approximately 2.5:1 slopes, reducing the depth from approximately 40' to 26'; approximately 6 - 8" of topsoil was placed; the hole was pocked; and the hole, access corridor and immediate areas were seeded.

5.4.1.2 Surface Coal Mining and Reclamation Activities

No surface coal mining and reclamation activities are conducted in the permit area.

5.4.1.3 Underground Coal Mining and Reclamation Activities

All surface equipment, structures, or other facilities not required for continued underground mining activities and monitoring, unless approved by the UDOGM as suitable for the post-mining land use or environmental monitoring, will be removed and the affected lands reclaimed.

5.4.1.4 Environmental Protection Performance Standards

The plan presented herein is designed to meet the requirements of R645-301 and the environmental protection performance standards of the State Program.

5.4.2 Narratives, Maps, and Plans

5.4.2.1 Reclamation Timetable

A timetable for the completion of each major step in the reclamation plan is presented in Figure 5-2.

5.4.2.2 Plan for Backfilling, Soil Stabilization, Compacting, and Grading

The regrading plan for the waste rock disposal facility is presented in Volume 3. Regrading at the waste rock facility will occur on a continuing basis as the rock is emplaced.

APPENDIX 5-13

2RWL Sinkhole

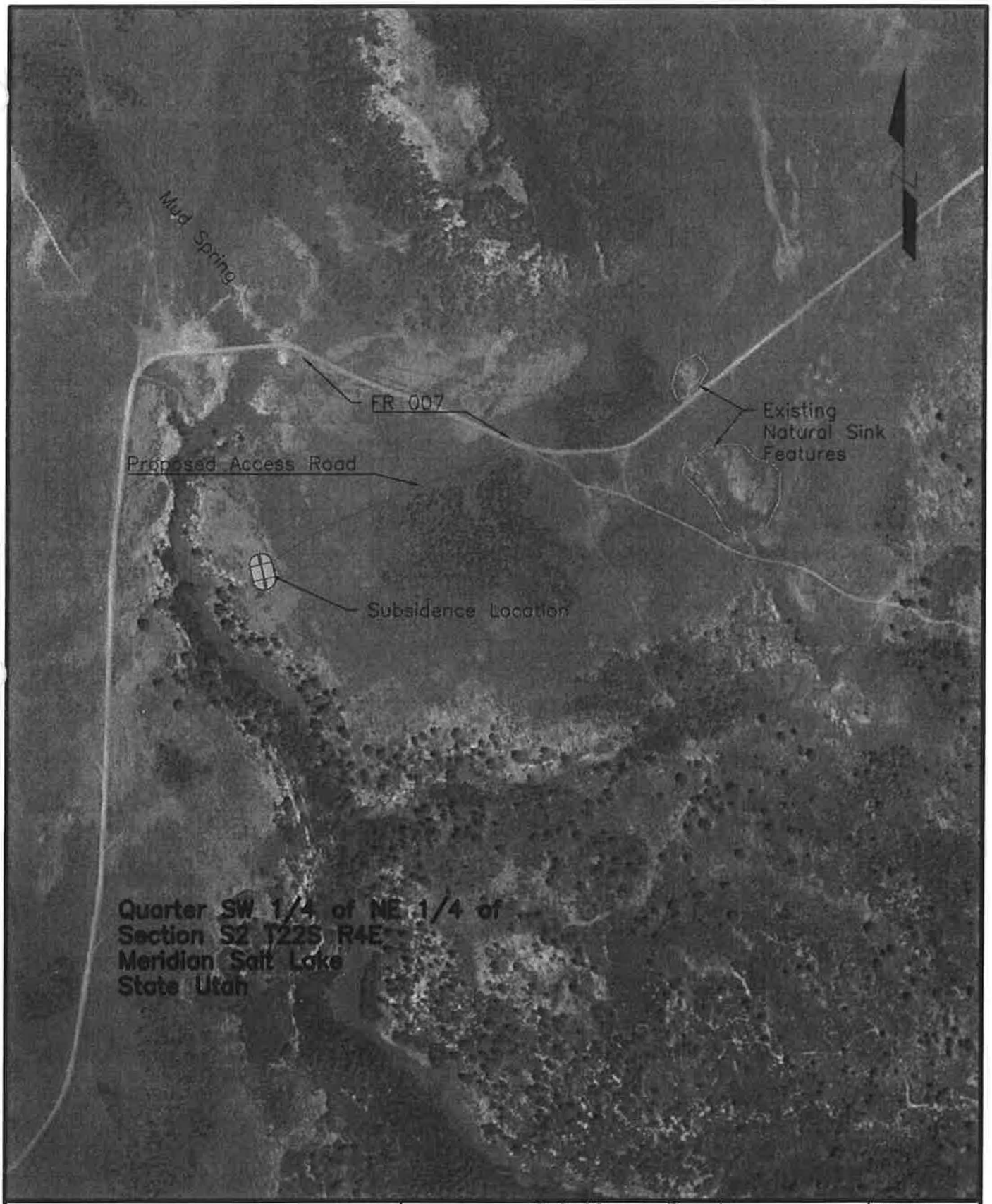

Canyon Fuel Company, LLC
SUFCO Mine
597 South SR 24 - Salina, UT 84654
(435) 286-4880 Phone
(435) 286-4499 Fax

Subsidence Repair			SHEET NO.
Site Map			1
SCALE: 1" = 500'	REV. DATE: 11/9/2016	DRAWN BY: BWB	
ENGINEER: BWB	CHECKED BY: JS	PROJ: 2RWL SH	
FILE NAME:			

Photo 1. Sinkhole – 1 Day Before Construction (Looking Northeast).

Photo 2. Sinkhole – 1 Day before Construction (Looking South).

Photo 3. Sinkhole – Day of Completion (Looking Northeast).

Photo 4. Sinkhole – Day of Completion (Looking South).

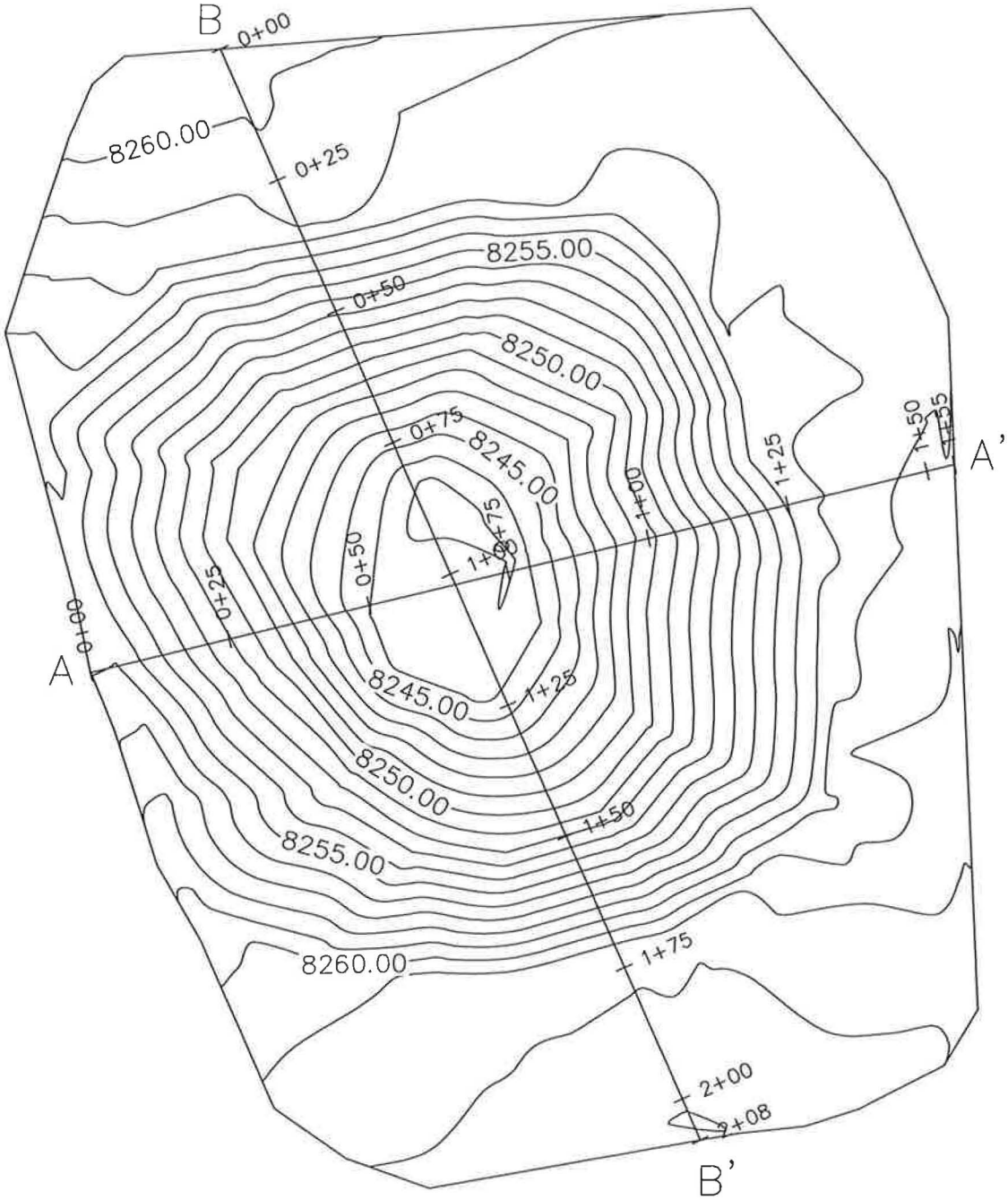

Canyon Fuel Company, LLC
SUFCO Mine
597 South SR 24 - Salina, UT 84654
(435) 286-4880 Phone
(435) 286-4499 Fax

SINK HOLE		
AS BUILT – Topo		
SCALE: 1" = 30'	DATE: 11/16/2016	DRAWN BY: J.G.C.
ENGINEER: V.M.	CHECKED BY: V.M.	PROJ: 1016–003
FILE NAME: M:\PROJ\1016–003 – Sink Hole\Sink Hole\DWGS\SINK HOLE as built.dwg		

SHEET NO.
appendix
5–13

Jason Ch en: 11/16/2016 1:28 PM

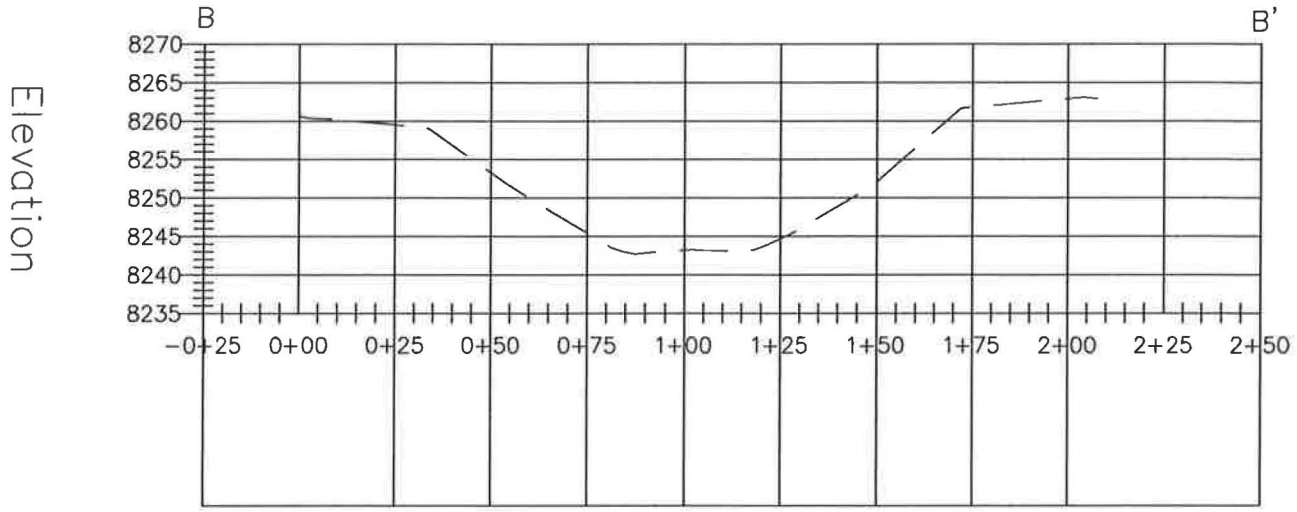

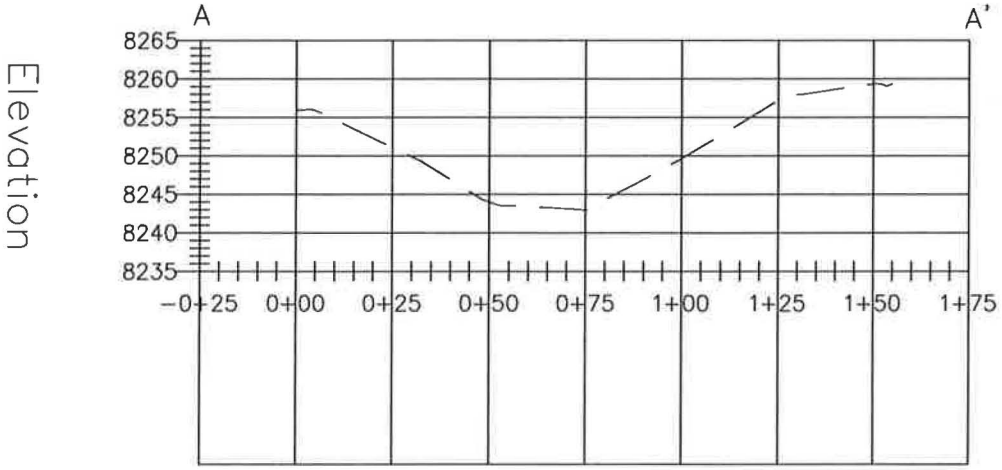

Canyon Fuel Company, LLC
SUFCO Mine
597 South SR 24 - Salina, UT 84654
(435) 286-4880 Phone
(435) 286-4499 Fax

SINK HOLE		
AS BUILT – Section Profiles		
SCALE: 1" = 30'	DATE: 11/16/2016	DRAWN BY: J.G.C.
ENGINEER: V.M.	CHECKED BY: V.M.	PROJ: 1016-003
FILE NAME: M:\PROJ\1016-003 – Sink Hole\Sink Hole\DWGS\SINK HOLE as built.dwg		

SHEET NO.
appendix
5-13

Jason Ch: en: 11/16/2016 1:28 PM

Canyon Fuel Company, LLC – Sufco Mine

2RWL Sinkhole Mitigation Plan

Revised August 2016

Introduction

During early April 2016, Sufco Mine discovered a sinkhole on the surface above the 2RWL panel. Longwall mining in the area of the sinkhole occurred during late December 2015. The sinkhole measures approximately 41 ft. wide, 64 ft. long and 40 ft. deep. Sufco promptly mitigated the immediate hazard by fencing off the area directly surrounding the sinkhole.

This is the first time such a feature has occurred during longwall mining. The sinkhole is located along a fault zone. The fault zone is exposed in the sink hole. Sink features are known to occur naturally in the Castlegate Sandstone along the Mud Springs Hollow fault zone nearby to the east. We suspect mining-related subsidence triggered this collapse into a cavity within the fault zone close to the surface. Exploration drilling over the years in this area has encountered voids on occasion, but such voids have always been interpreted as limited zones of open fractures. In this case, there must have been a large near surface cavity that allowed accommodation space for the sinkhole to develop.

Longwall mining height was in the 9 to 10.5 ft. range beneath the 40 ft. deep sinkhole, much deeper than could have been produced by subsidence alone. Overburden depth in the area is 890 ft. At that depth, and at mid-panel, we would normally project subsidence of about 50-60% mine height, or about 5 to 6 ft. The aforementioned natural sink features in the area help provide the only known explanation for this depth of subsidence.

Proposed Long-Term Mitigation Measures

The intent of Sufco is to mitigate the hazards associated with the sinkhole as soon as possible in the interest of reclamation and public safety. Due to the size of the sinkhole, it would require approximately 4,700 cubic yards of material to fill the void. This volume would require approximately 470 loads of trucked-in material (10 yds^3/ end dump truck). The sheer volume of loads necessary to fill the void would not only be expensive, but would also require a large volume of heavy truck traffic in the area.

As natural sink features exist nearby to the east of the sinkhole (see figure), Sufco proposes a mitigation solution that will attempt to mimic these features. We propose to accomplish this as described below:

(1) A temporary path will be established to access the site, and will extend southwest from FR 007 about 1000 ft. to the sinkhole location (see figure below). Traffic to the site will be limited to essential equipment and haul trucks as needed. Following completion of the project, the temporary access path will be roughened and seeded with a site-specific native mix.

(2) Topsoil will be removed from the anticipated disturbance area with a track hoe, dozer, or similar equipment. The anticipated disturbance area (excluding the access path/small staging area) will be approximately 0.5 acres. According to visual estimations, topsoil depth ranges from 8 inches to 30 inches surrounding the sinkhole. Though exact volumes are unknown, we estimate that approximately 1000 cubic yards of topsoil will be removed from the anticipated disturbance area. Topsoil will be temporarily stockpiled adjacent to the project area, protected by a silt fence.

(3) Following topsoil removal hydraulic hammer equipment (attached to a backhoe to similar equipment) will be used to break the sandstone if needed. The residual material will be pushed down slope toward the sinkhole center. The sides of the sinkhole will be graded to

approximately a 2.5:1 slope (see attached drawing and cross-sections). The new depth of the re-shaped sinkhole will be approximately 26 ft. deep compared to the existing ground surface.

(4) Topsoil removed from the project area will be redistributed throughout the disturbed area at a depth ranging between 8 and 15 inches. In order to meet this depth throughout the project area, supplemental topsoil may be hauled in as needed. Supplemental topsoil may be salvaged from offsite sources such as Forest Service road improvement projects or elsewhere as approved by the Forest Service. The finished soil surface will be pocked/gauged in order to mitigate potential erosion.

(5) The disturbed area and reclaimed access path will be seeded with a site-specific native mix. The seeding method will be hand-broadcasting.

Sufco will attempt to complete mitigation before the end of the year 2016. If due to weather constraints it is not completed Sufco will expect completion during the summer of 2017.

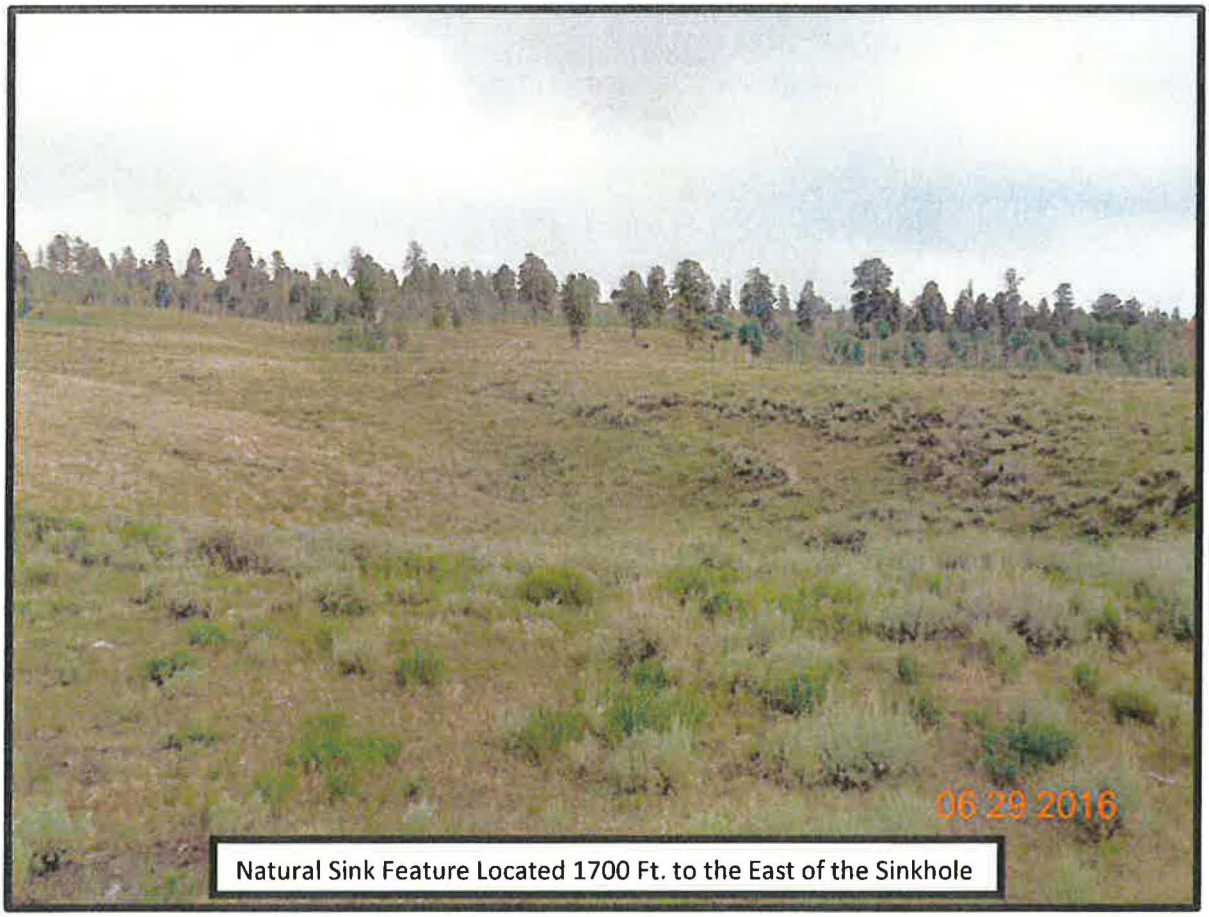

Natural Sink Feature Located 1700 Ft. to the East of the Sinkhole

Canyon Fuel Company, LLC
SUFCO Mine
597 South SR 24 - Salina, UT 84654
(435) 286-4880 Phone
(435) 286-4499 Fax

Subsidence Repair			SHEET NO.
Site Map			1
SCALE: 1" = 500'	DATE: 8/29/2016	DRAWN BY: BWB	
ENGINEER: BWB	CHECKED BY: JS	PROJ: 2RWL SH	
FILE NAME: X:\BBunnell\Subsidence Drawing 2.1.dwg			

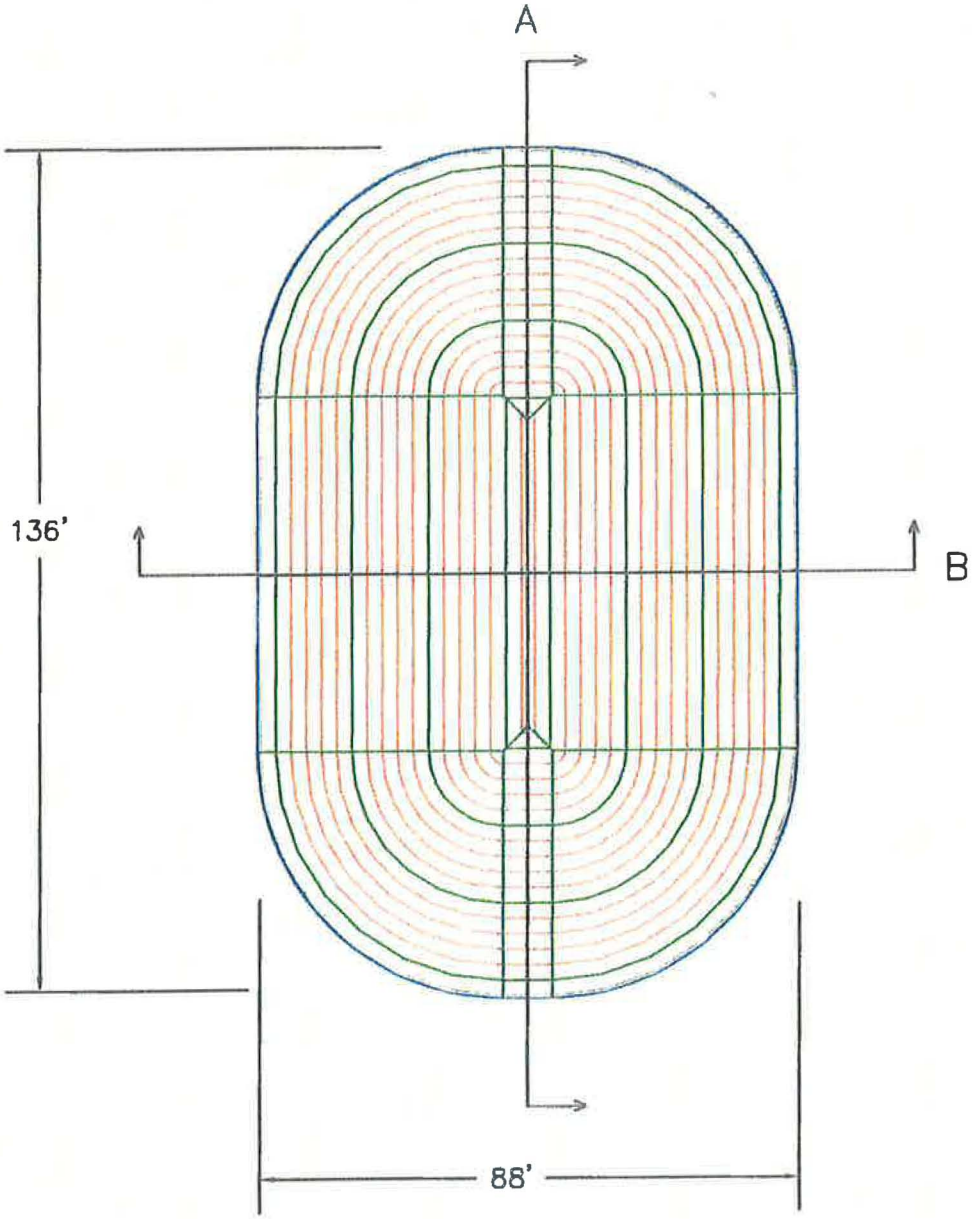

Canyon Fuel Company, LLC
SUFCO Mine
597 South SR 24 - Salina, UT 84654
(435) 286-4880 Phone
(435) 286-4499 Fax

Subsidence Repair			SHEET NO.
Plan View			2
SCALE: 1" = 30'	DATE: 8/24/2016	DRAWN BY: BWB	
ENGINEER: BWB	CHECKED BY: JS	PROJ: 2RWL SH	
FILE NAME: X:\BBunnell\Subsidence Drawing 2.1.dwg			

Cross Section B

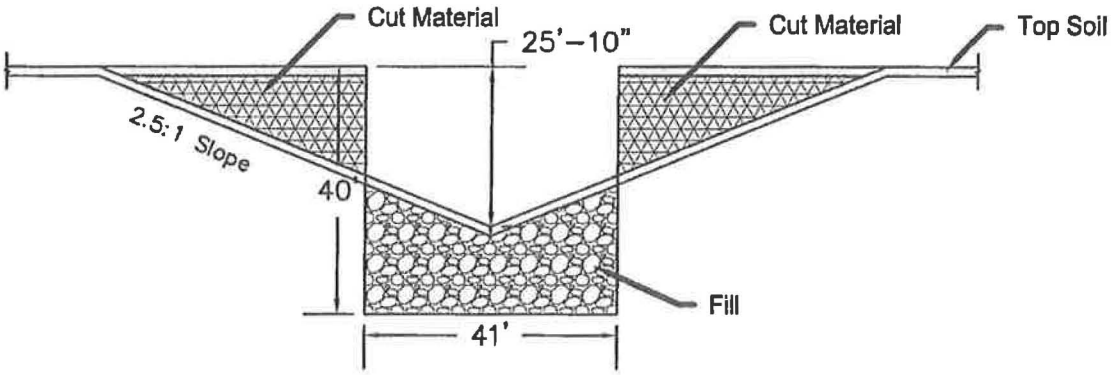

Cross Section A

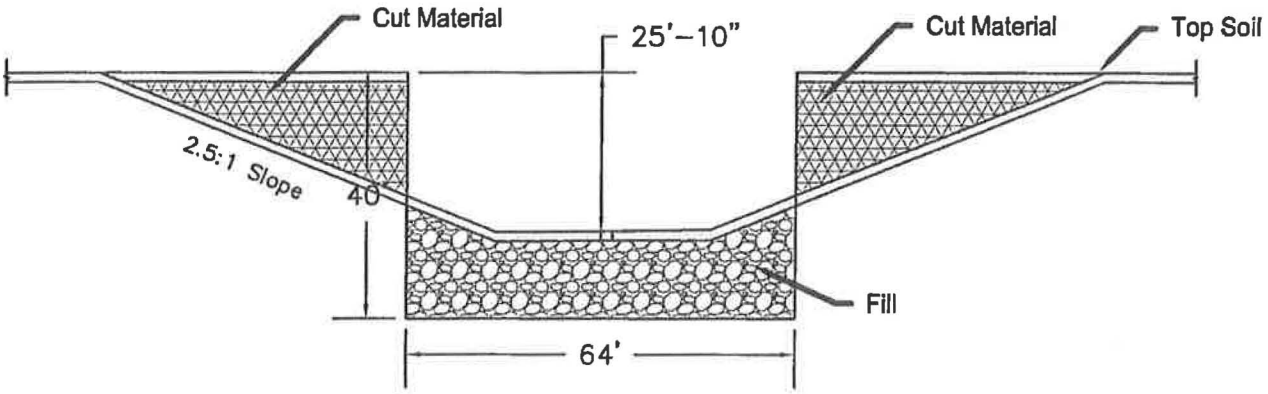

Canyon Fuel Company, LLC
SUFCO Mine
597 South SR 24 - Salina, UT 84654
(435) 286-4880 Phone
(435) 286-4499 Fax

Subsidence Repair			SHEET NO.
Cross–Sections			3
SCALE: 1" = 30'	DATE: 8/24/2016	DRAWN BY: BWB	
ENGINEER: BWB	CHECKED BY: JS	PROJ: 2RWL SH	
FILE NAME: X:\BBunnell\Subsidence Drawing 2.1.dwg			

CHAPTER 7

HYDROLOGY

No water-supply wells exist in the permit or adjacent areas. Groundwater monitoring wells in the area are located as shown on Plate 7-3. Depths of these wells and other completion details are summarized in Table 7-1.

7.2.2.5 Surface Topography

Surface topographic features in the permit and adjacent areas are shown on the base maps used for Plate 7-3.

7.2.3 Sampling and Analysis

All water samples collected for use in this M&RP have been analyzed according to methods in either the "Standard Methods for the Examination of Water and Wastewater" or 40 CFR parts 136 and 434. Where feasible, these same references have been used as the basis for sample collection.

7.2.4 Baseline Information

Surface water, groundwater, and climatic resource information is presented in this section to assist in determining the baseline hydrologic conditions which exist in the area of the mine. This information provides a basis to determine if mining operations have had, or can be expected to have, a significant impact on the hydrologic balance of the area.

7.2.4.1 Groundwater Information

This section presents a discussion of baseline groundwater conditions in the mine area. A discussion of the groundwater conditions in the SUFCO lease area is presented in this section and appended by Appendix 7-17. A discussion of groundwater conditions in the Pines Tract is presented in Appendix 7-18 of this Chapter. A discussion of groundwater conditions in the West Coal Lease Modifications is presented in Appendix 7-24 of this Chapter. A discussion of groundwater conditions at the waste rock disposal site is provided in Volume 3 of this M&RP.

The locations of wells and springs in the mine area are presented on Plate 7-3. The wells in the mine area are all water monitoring wells, not water supply wells. Water rights for the mine and adjacent areas are addressed in Section 7.2.2.2 of this M&RP. With the exception of the potable use of source 94-87 by SUFCO, all other groundwater use (seeps and springs) is confined to stock watering. The hydrology in the area of the 2RWL sinkhole are discussed in the PHC located in Appendix 7-24.

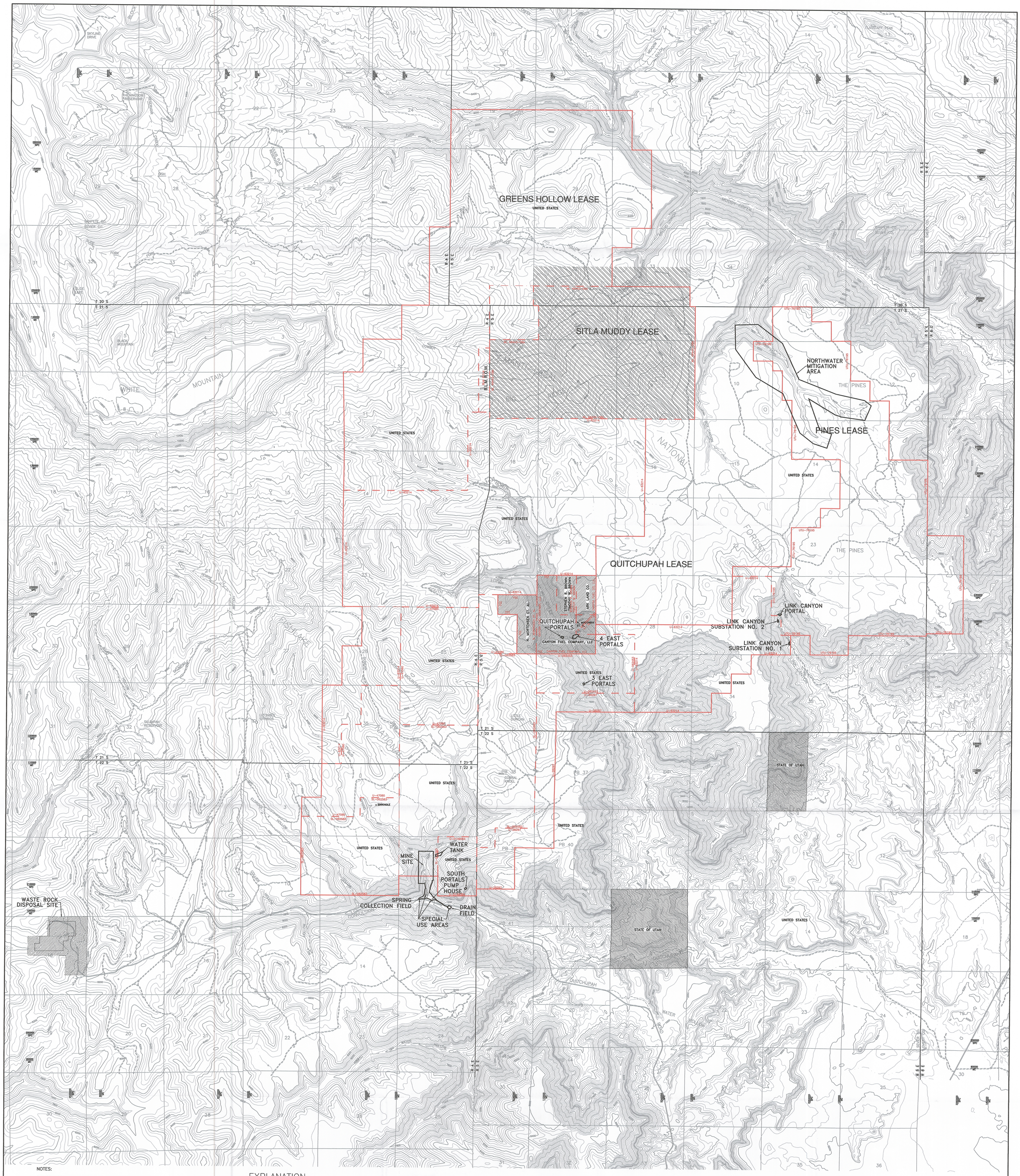

NOTES:

1. "LEASE AREA" INCLUDES ALL FEDERAL COAL LEASES, STATE COAL LEASES, FEE LANDS AND U.S.F.S. SPECIAL USE PERMIT (SUP) AREAS SHOWN ON THIS MAP.
2. SEE VOLUME 3 REGARDING OWNERSHIP AT WASTE ROCK DISPOSAL SITE.
3. SEE PLATE 5-2A REGARDING MINESITE AREA DETAIL.
4. SEE PLATE 5-2B REGARDING U.S.F.S. SPECIAL USE AREA DETAIL.
5. SEE PLATE 5-2C REGARDING PORTAL AREA DETAIL.
6. SEE PLATE 5-2D REGARDING LINK CANYON SUBSTATION NO. 1 AREA DETAIL.
7. SEE PLATE 5-2E REGARDING LINK CANYON SUBSTATION NO. 2 AREA DETAIL.
8. SEE PLATE 5-2F REGARDING LINK CANYON PORTAL AREA DETAIL.

LAND AND MINERAL OWNERSHIP

LAND	MINERAL
UNITED STATES	STATE OF UTAH
UNITED STATES	UNITED STATES
VARIOUS OWNERS (AS SHOWN)	CANYON FUEL COMPANY, LLC
STATE OF UTAH	UNITED STATES
U.S.F.S. SPECIAL USE AREA	UNITED STATES

EXPLANATION

- SUFCO EXTERIOR LEASE BOUNDARY
- SUFCO INTERIOR LEASE BOUNDARY
- PERMIT BOUNDARY
- SPECIAL USE PERMIT BOUNDARY
- 100000 MC — MINE COORDINATES
- 2020000 SPC — STATE PLANE COORDINATES
- DISTURBED AREA BOUNDARY MARKER
- DISTURBED AREA BOUNDARY

LEASE AREA

16,954.56	ACRES	FEDERAL COAL LEASES
2,294.19	ACRES	UTAH STATE COAL LEASES
640.00	ACRES	FEE COAL LEASES
240.00	ACRES	WASTE ROCK DISPOSAL SITE
28.50	ACRES	U.S.F.S. SPECIAL USE PERMITS
70.00	ACRES	B.L.M. RIGHT-OF-WAY
20,227.25	ACRES	TOTAL LEASE AREA

ADJACENT AREA

1. BIOLOGY ADJACENT AREA IS A 0.5 MILE BUFFER AROUND ALL SURFACE DISTURBANCES.
2. SEE CHIA FOR HYDROLOGIC ADJACENT AREA BOUNDARY.

PROFESSIONAL ENGINEER No. 9073281 JACOB D. SMITH STATE OF UTAH

I CERTIFY THE ITEMS SHOWN ON THIS DRAWING ARE ACCURATE TO THE BEST OF MY KNOWLEDGE

2000 0 2000

RECEIVED MAR 09 2017 DIV. OF OIL, GAS & MINING

REVISIONS				
NO.	DATE	REQ. BY	DWG. BY	REMARKS
20	03/02/15	T.R.B.	J.G.C.	ADDED 70 ACRE R.O.W AREA FOR 5 WEST
21	07/14/16	V.M	J.G.C	ADD GREENS HOLLOW & SOUTH FROK LEASE BOUNDARY
22	12/14/16	V.M	T.L.M.	REMOVE SOUTH FORK LEASE BOUNDARY
23	02/28/17	V.M.	B.R.	UPATED WASTE ROCK PERMIT BOUNDARY
				BOUNDARIES

Canyon Fuel Company, LLC
SUFCO Mine
597 South SR 24 – Salina, UT 84654
(435) 286-4880 Phone
(435) 286-4499 Fax

LAND OWNERSHIP, LEASE, AND PERMIT AREA MAP

PEN TBL:	SCALE:	DATE:	DRAWN BY:	ENGINEER:	CHECKED BY:	SHEET NO.
15mbd-SUFDMP.ctb	1" = 2,000'	2/28/2017	JMB/TRB	J.S	VM	PLATE 5-6
SHT SET: #### / PROJECT NUMBER: ####	FILE NAME: H:\DRAWINGS\MRP\PLATES\PLATE 5-6.dwg					