MAP

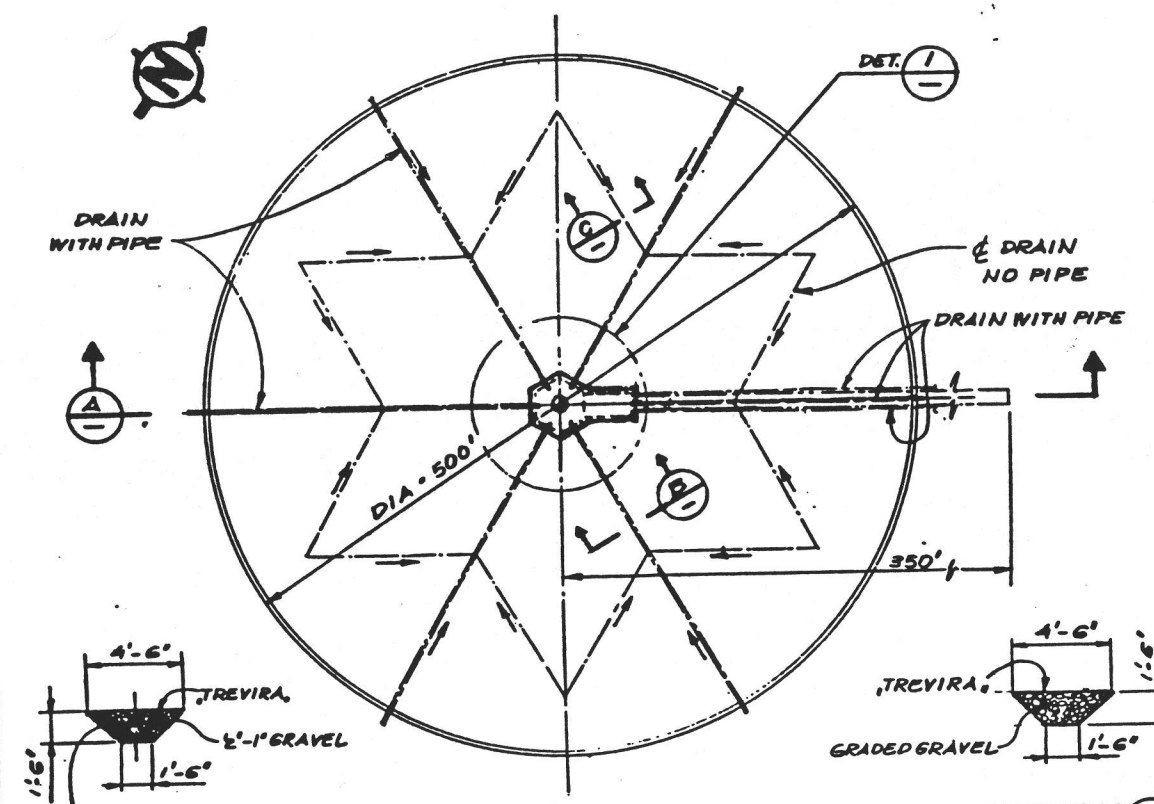

SECTION B

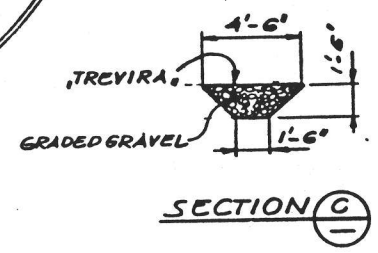

SECTION C

PLAN
50' = 1'-0"

GRAPHIC SCALE 0 100 200 FT

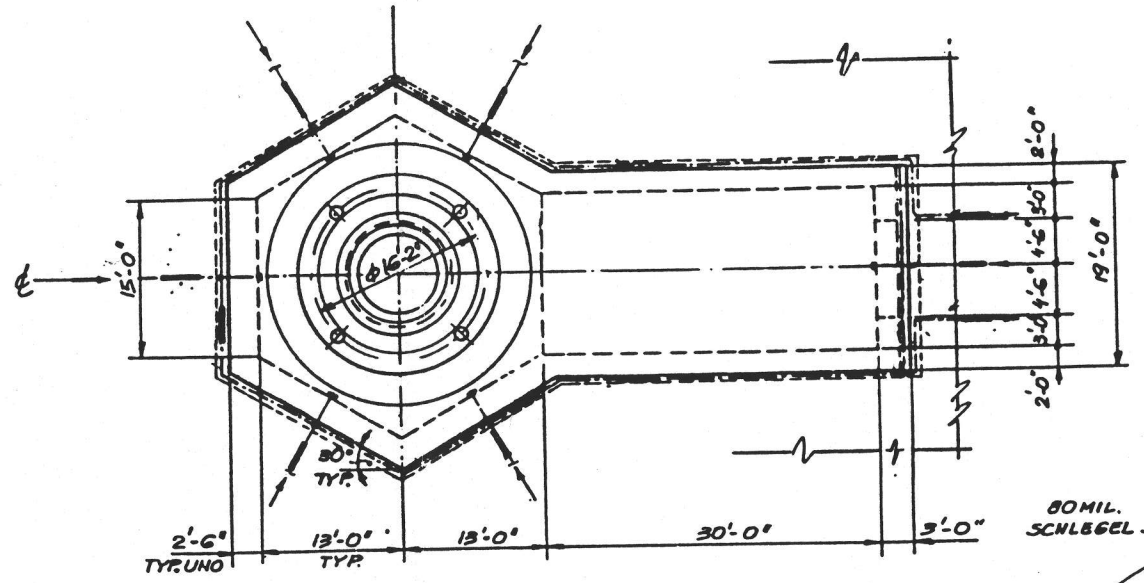

DETAIL 1
1/8" = 1'-0"

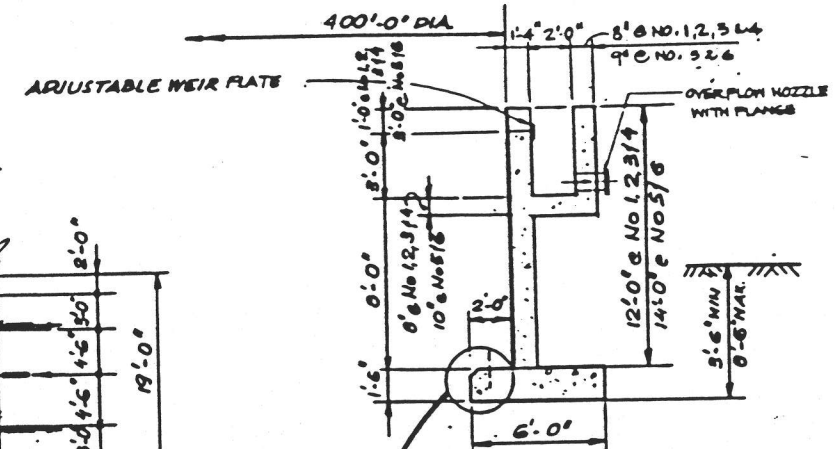

DETAIL 2
1/4" = 1'-0"

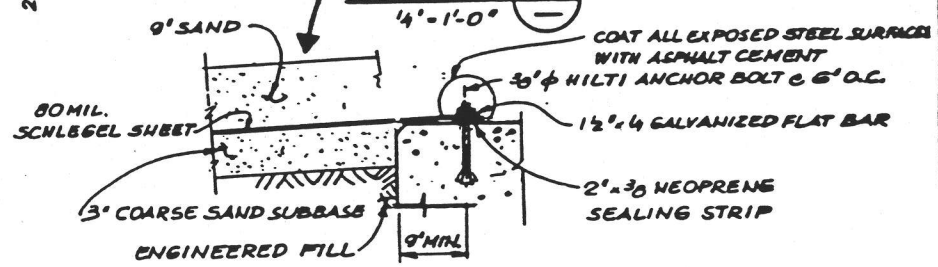

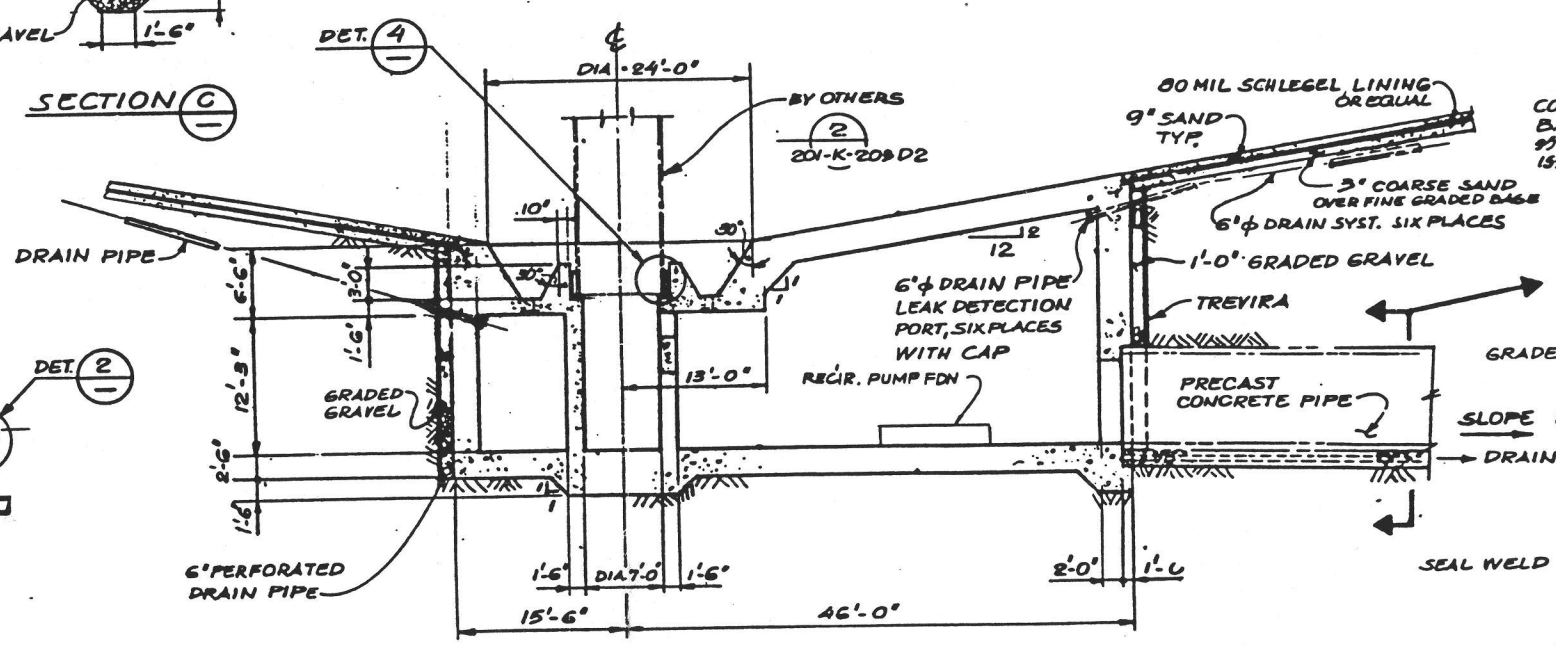

DETAIL 3
1/8" = 1'-0"

GRAPHIC SCALE: 1/8"=1'-0"

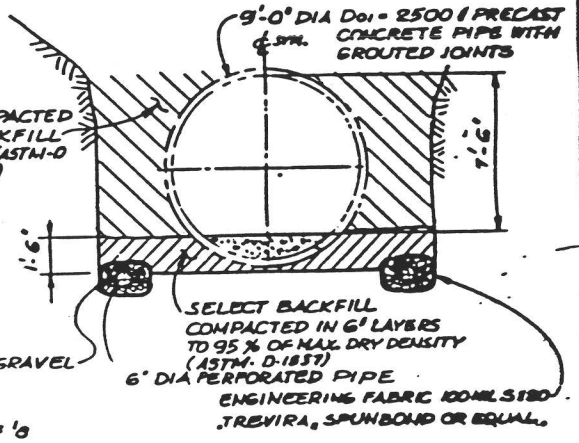

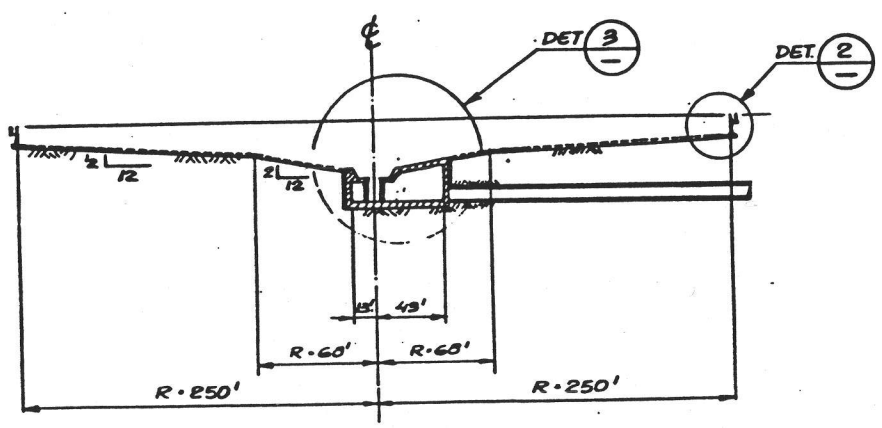

SECTION A
50' = 1'-0"

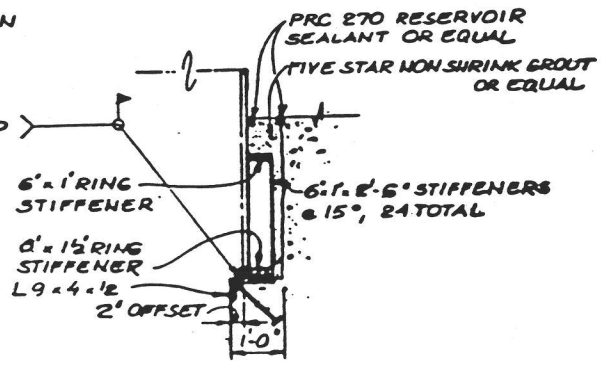

DETAIL 4
N.T.S.

NO.	DATE	REVISION	APP.	APP.
A	11.10.85	ISSUED FOR REPORT		

REFERENCE DRAWINGS | NUMBER | NOTES | PURCH. ORDER NO. | CONTRACT NO.

DRAFT

Bechtel Corporation
SAN FRANCISCO

APPROVAL	DATE	SCALE	DATE
		DESIGNED BY F.L.	10.3.85
		DRAWN BY I.L./HGL	10.9.85
KENNECOTT:		CHECKED BY N.C.	
PROJECT ENGINEER:		APPROVED BY	
PROJECT DIRECTOR:		APPROVED BY	

KENNECOTT

UTAH COPPER DEVELOPMENT PROJECT
TAILINGS THICKENER
PLAN, SECTIONS & DETAILS
4TH MILL LINE EXTENSION

Job No. 20444 | Dwg. No. 237-C-1201 | A

DC DT

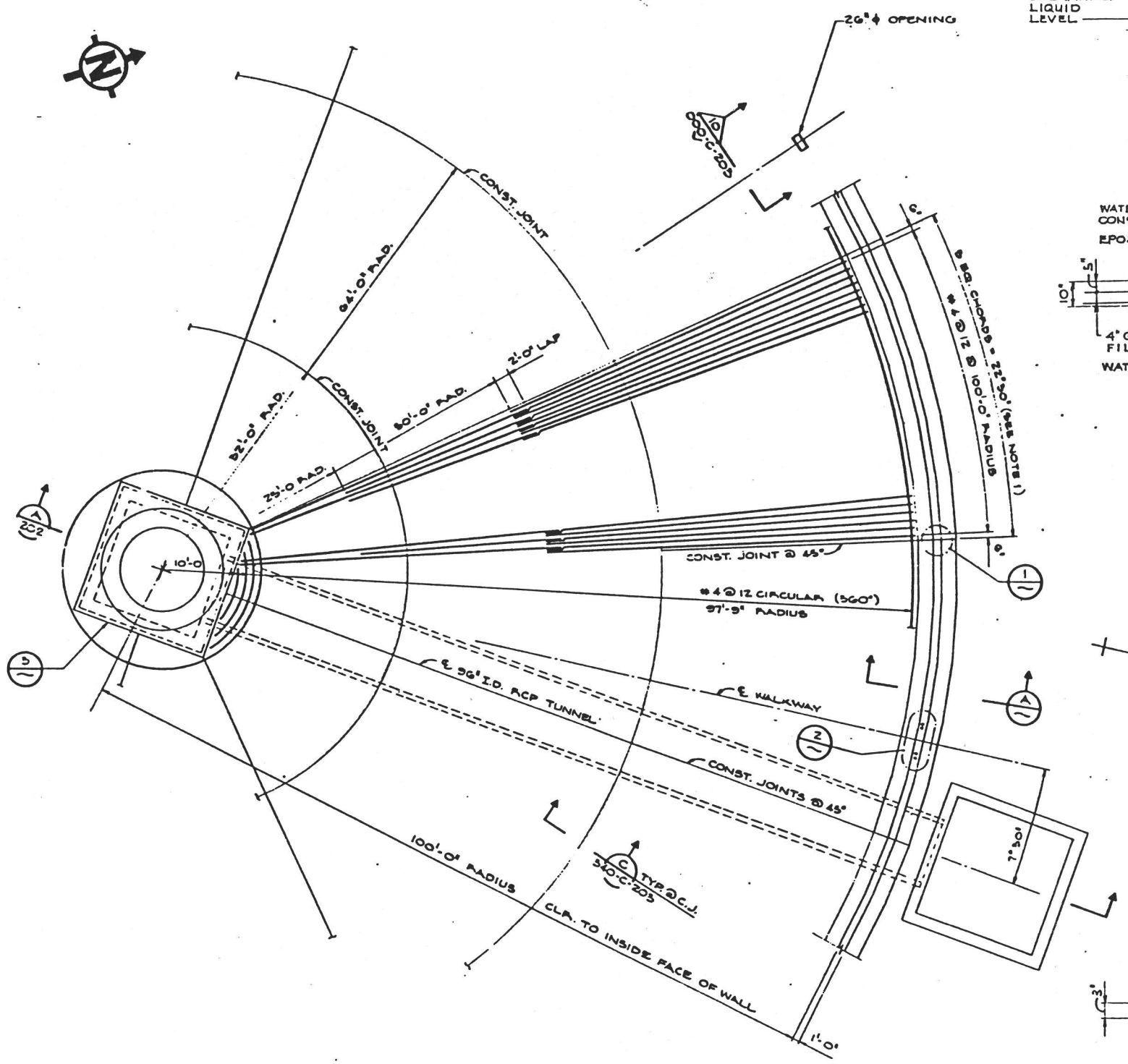

PARTIAL PLAN
1/8" = 1'-0"

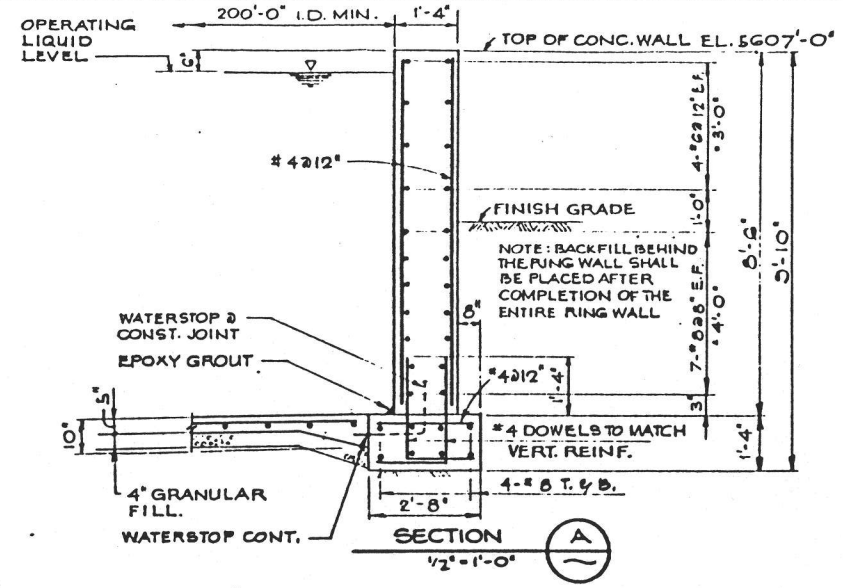

SECTION A
1/2" = 1'-0"

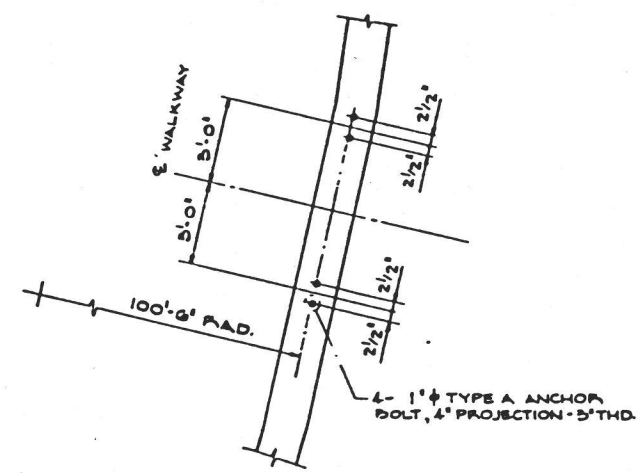

DETAIL 2
3/8" = 1'-0"

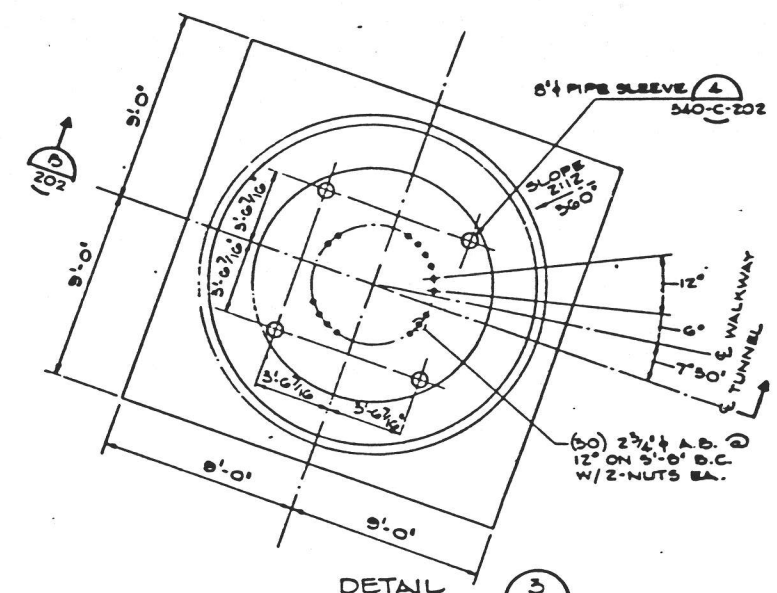

DETAIL 3
1/4" = 1'-0"

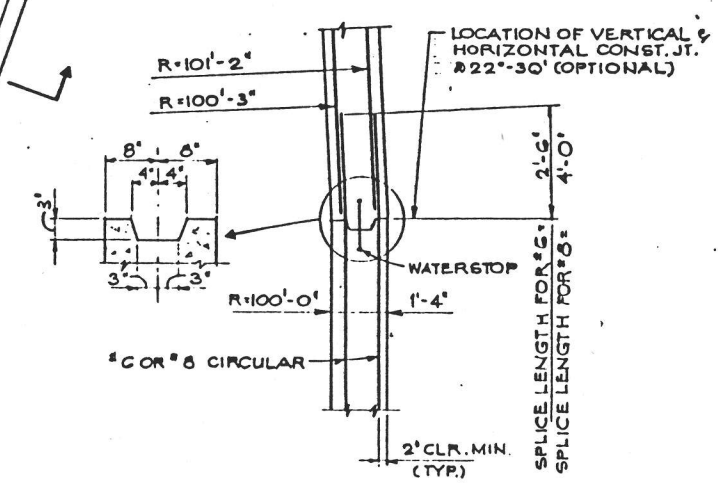

DETAIL 1
1/2" = 1'-0"

NO.	DATE	REVISION	APP.	APP.
A	11.3.85	ISSUED FOR REPORT		

REFERENCE DRAWINGS | NUMBER | NOTES | PURCH. ORDER NO. | CONTRACT NO.

DRAFT

Bechtel Corporation
SAN FRANCISCO

APPROVAL	DATE	SCALE: AS NOTED		DATE
KENNECOTT:		DESIGNED BY	F.L.	10.16.85
PROJECT ENGINEER:		DRAWN BY	I.L.	10.17.85
PROJECT DIRECTOR:		CHECKED BY		
		APPROVED BY		
		APPROVED BY		

KENNECOTT

UTAH COPPER DEVELOPMENT PROJECT
CONCENTRATE. THICKENER
PLAN, SECTIONS & DETAILS
4TH MILL LINE EXTENSION

Job No. 20444 | Dwg. No. 236-C-1201 | REVISION A

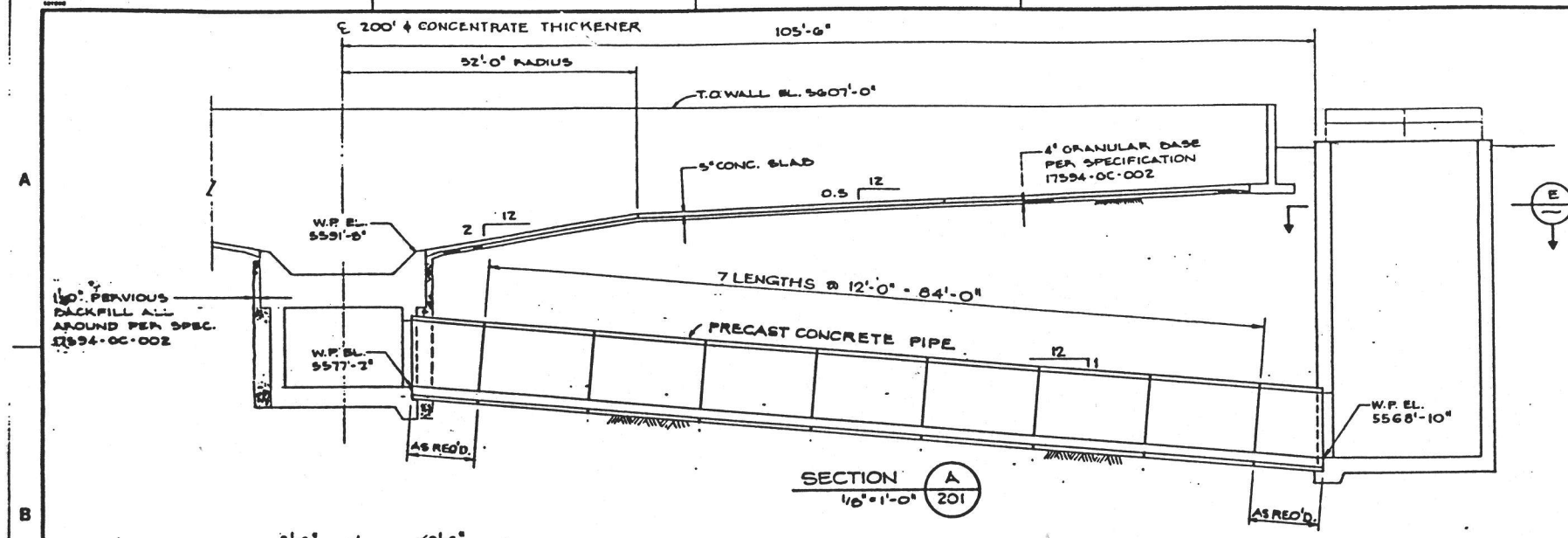

SECTION A 201
1/8" = 1'-0"

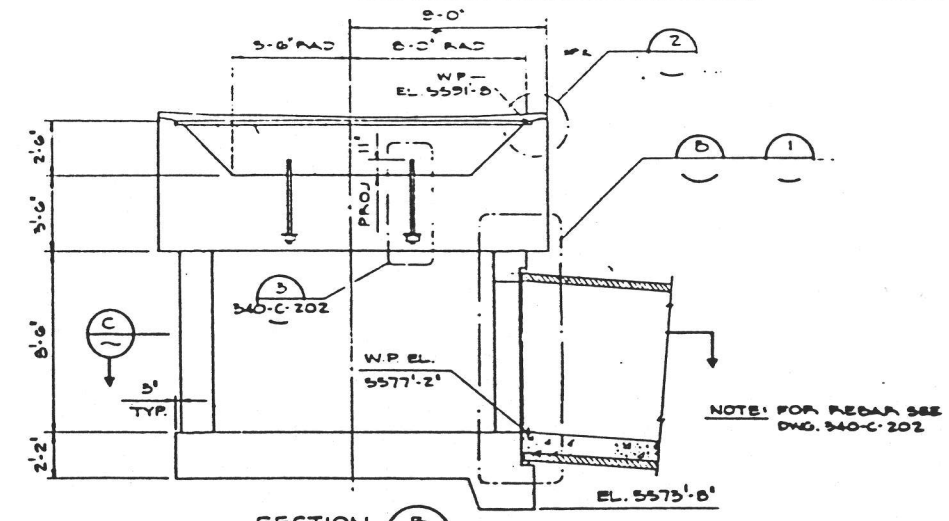

NOTE: FOR REBAR SEE DWG. 340-C-202

SECTION B 201
1/4" = 1'-0"

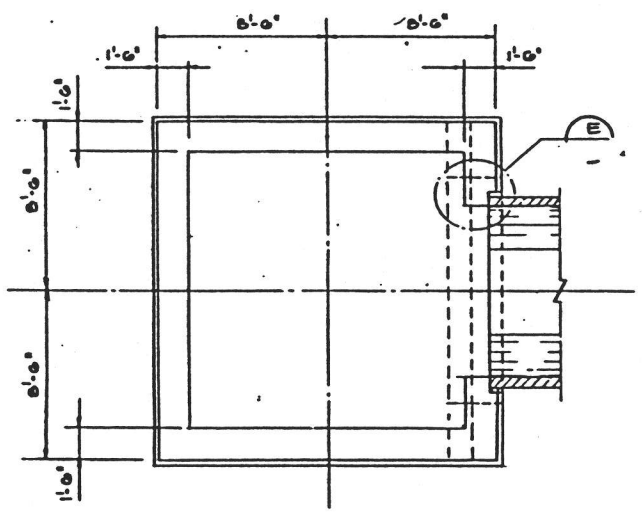

SECTION C
1/4" = 1'-0"

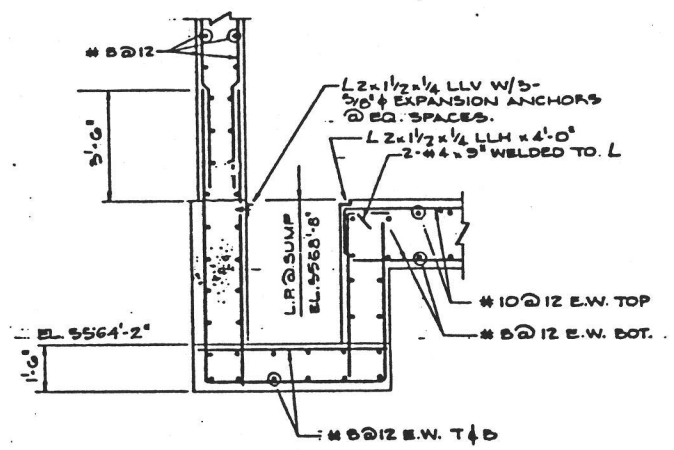

SECTION D
5/8" = 1'-0"

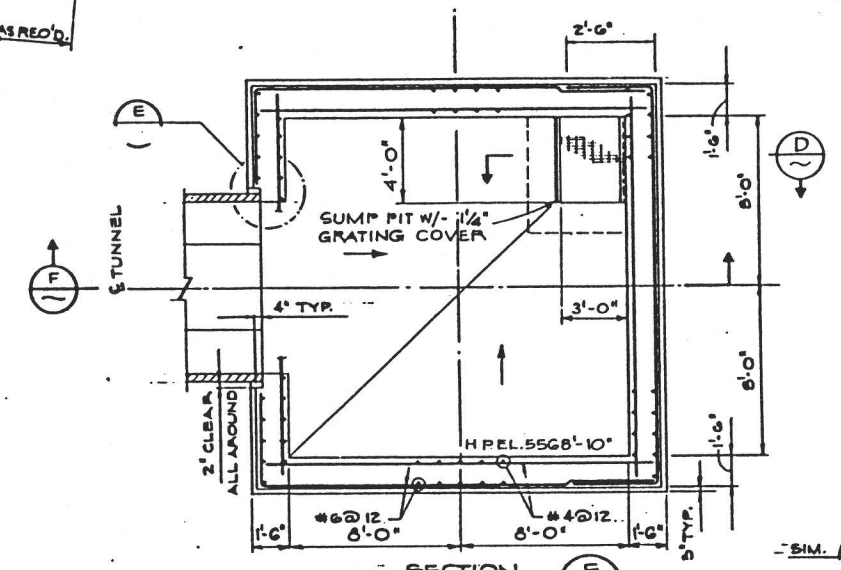

SECTION E
1/4" = 1'-0"

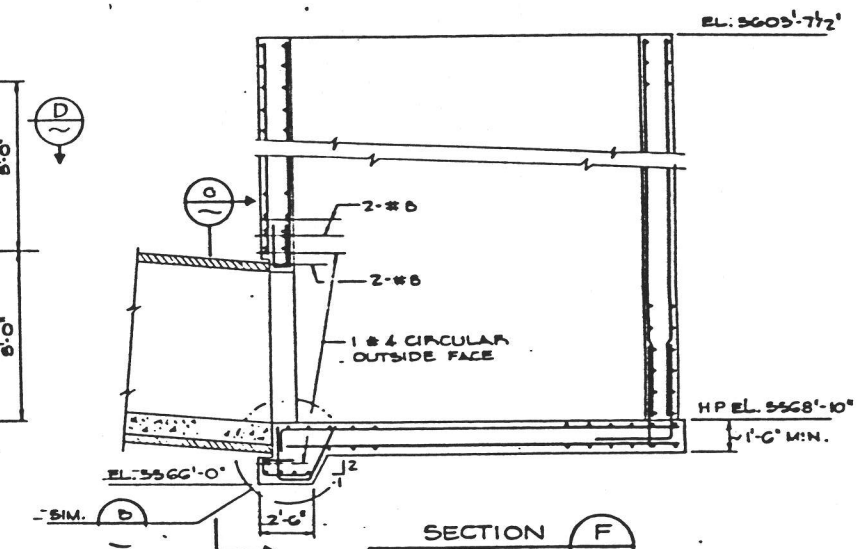

SECTION F
1/4" = 1'-0"

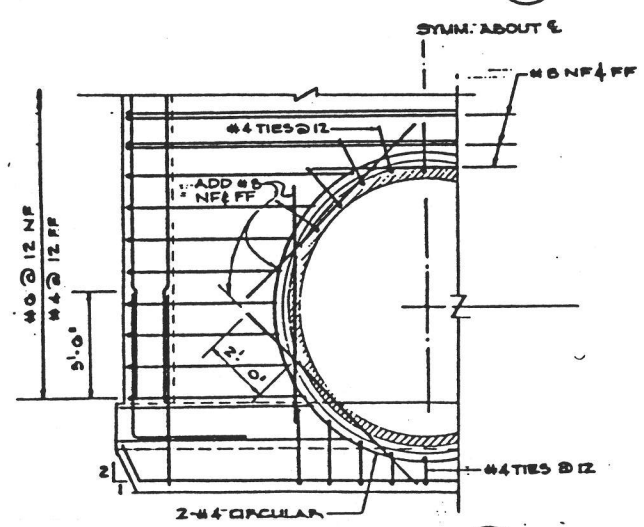

SECTION G
5/8" = 1'-0"

NO.	DATE	REVISION	APP.	APP.	REFERENCE DRAWINGS	NUMBER	NOTES	PURCH. ORDER NO.	CONTRACT NO.
A	11.3.89	ISSUED FOR REPORT							

DRAFT

Bechtel Corporation
SAN FRANCISCO

APPROVAL	DATE	SCALE: AS NOTED		DATE
		DESIGNED BY	F.L.	10.16.89
		DRAWN BY	I.L.	10.16.89
KENNECOTT:		CHECKED BY		
PROJECT ENGINEER:		APPROVED BY		
PROJECT DIRECTOR:		APPROVED BY		

KENNECOTT

UTAH COPPER DEVELOPMENT PROJECT
CONCENTRATE THICKENER
SECTIONS
4TH MILL LINE EXTENSION

Job No. 20444 | Dwg. No. 236-C-1202 | A