THIRD INTERNATIONAL GOLD SYMPOSIUM

Rio De Janeiro, Brazil

August 26-27, 1987

THE BARRICK MERCUR GOLD MINE

by

Frank D. Wicks*

*Vice President and General Manager
Barrick Resources (USA)
P.O. Box 838
Tooele, Utah, USA 84074

Telephone (801) 268-4447
Telecopier (801) 266-4296

THE BARRICK MERCUR GOLD MINE

Frank D. Wicks, Barrick Resources (USA)

History

The Mercur Mining District is located in the southern end of the Oquirrh Mountains, approximately 35 air miles southwest of Salt Lake City.

The district, primarily a producer of gold, was organized in 1870 with the discovery of silver on Marion Hill in a massive jasperoid termed the Silver Chert bed. Mining of these ores continued for only two years; but during this time, gold mineralization was identified by assay but could not be identified visually because of its micron size. Gold production did not commence until over 20 years after the discovery of silver as technology was not available for the economic recovery of gold as applied to the Mercur mineralogy. By 1891, significant strides had been made with the development of cyanidation. Mercur became the first successful application in the U.S. of the McArthur-Forrest cyanide leaching process and enjoyed the added distinction of being the earliest Carlin-type ore body to be mined in the U.S.

Early mining from 1891 to 1913 was predominantly underground; and under the leadership of such prominent engineers as Daniel C. Jackling, Mercur became well known for its innovativeness which included one of the first applications of electrification to underground mining. Most of the production during this period came from the Sacramento, Mercur Hill, Golden Gate, and Marion Hill mineralized areas and was reportedly about 1.2 million ounces of gold. It is of particular interest to current Mercur operation that over 30% of the ore mined from these areas was first roasted to oxidize sulfides and carbon to improve recovery.

During this turn of the century mining period, grade became poorer, forcing closure of the operation in 1913. Mining resumed again in 1932 with an increase in gold price from $20 to $35 U.S. Operations again terminated in 1942 as a result of World War II and the Federal Gold Mine Closure Act. Mercur was not to see a resumption of activity until the Getty Oil Company optioned the Mercur property from Gold Standard Inc. in September 1973. Gold Standard Inc. holds a 15% net profit interest in the project. In early 1983 Getty constructed a 3,000 stpd mill and open pit mine complex. Getty operated the mine until the property was purchased in mid-1985 by the current operator, American Barrick Resources Corporation of Toronto, Ontario, Canada, a major North American gold producer. Barrick has expanded this open pit operation since purchase and, with minimum capital expenditure, operates the mill at over 4,700 stpd.

Geology

Stratigraphy/Host Rocks

The Mercur gold deposit is hosted in the Mississippian Great Blue Limestone. In the general mine area the exposed stratigraphic section also includes; below the Great Blue Limestone, the Mississippian Deseret Limestone and interbedded sandstone and limestone of the Humbug Formation, and above the Great Blue Limestone, the Mississippian-Pennsylvanian Manning Canyon Shale and limestones and predominant quartzites of the Pennsylvanian-Permian Oquirrh Formation. The Great Blue Limestone is divided into the 3,000-foot-thick, massive limestone Upper Member, the 100-foot-thick Long Trail Shale, the 250-foot-thick Mercur Series, and the 250-foot-thick Lower Member.

The Mercur series is an informal, historical nomenclature applied to the altered stratigraphy of the district. Beginning at the bottom is the Silver Chert, a massive stratabound, strataform jasperoid; the Magazine Sandstone, a fine-grained calcite cemented sand with silt, clay, and limestone interbeds; the Barren Limestone, a micritic, massive limestone with regular clay partings; the Mercur Bed, a porous, silty, strongly fossiliferous limestone; and finally the Upper Bed, a less silty and fossiliferous limestone.

Geologic History/Structure

The Mercur series represents shallow marine carbonate and subaerial detrital sediment deposition and is part of the six-mile-thick Mississippian to Permian age Oquirrh Basin.

Rocks of the Oquirrh Basin were first deformed by the Sevier Orogeny overthrusting. During thrusting, large and broad folds were formed in the thrust plates, resulting in the Ophir anticline and Pole Canyon syncline at Mercur. The Mercur deposits are located in the east dipping, east limb of the Ophir anticline. Also formed during folding and thrusting are 50- to 100-foot displacement normal and strike slip faults, represented by the Carrie Steele fault and the Lulu graben, a dense northeast-northwest conjugate set of 5- to 10-foot displacement normal faults and several local bedding slips or thrust faults. The Sevier Orogeny did an excellent job of ground preparation at Mercur.

An igneous intrusive period next affected Mercur. Two miles north of the mine is the 37-million-year-old Porphyry Hill granodiorite, a stock and dike network of coarse-grained porphyry. South and adjacent to the Mercur deposits are several rhyolite sills and laccoliths. The rhyolite is a

dense, white, aphanitic rock dated at 33 million years. Neither of the intrusives are altered or mineralized, but they possibly are associated with the Mercur hydrothermal system.

Basin and range faulting formed the Oquirrh Mountains and today's landscape. Additional normal faulting affected the Mercur area.

Mineralization/Alteration

Ore grade mineralization is generally restricted to the top and bottom portions of the Mercur series, the Upper and Mercur Beds and the Magazine Sandstone, Silver Chert, and upper 20 feet of the Lower Great Blue Limestone. Gold is concentrated along structures and disseminated out into irregular, tabular, altered host rock halos. Gold occurs in oxidized ores as free, micron-sized particles. In unoxidized ores, gold is also associated with sulfide minerals and organic carbon.

The hydrothermal system at Mercur developed several alteration and mineralization phases that are roughly juxtaposed physically and sequentially. Whole rock decalcification and silica replacement first formed the Silver Chert. Most of the district's silver was deposited at this time. Later argillic-phyllic alteration formed across the whole Mercur series. Decalcification along and out from faults was followed by sericite and kaolinite formation. Gold was primarily deposited during sulfide-carbonate vein formation. Typical vein minerals include calcite, pyrite, marcasite, orpiment, realgar, minor cinnabar, minor crystite, and minor lorandite. A final barite-halloysite vein stage apparently carried no silver.

Organic carbon is indigenous to the Great Blue Limestone. Additional carbon was mobilized during the hydrothermal event and introduced into the Mercur series. Gold is found adsorbed on kerogen and asphaltene.

Oxidation of the Mercur deposit developed from the bottom of the Mercur series up, such that the Silver Chert and Magazine Sandstone are pervasively oxidized and the Mercur and Upper Beds only locally oxidized. Incipient oxidation replaces some sulfides with jarosite, alunite, rosentite, and melanterite. Pervasive oxidation destroys sulfides and organic carbon, leaving hematite and limonite.

Exploration and Development

The Mercur District saw no systematic exploration until Getty Oil Company acquired the central, previously mined area

of Mercur. From 1973 through 1975, Getty drilled 86 holes consisting of rotary, core, and reverse circulation drilling. Work was discontinued due to unfavorable economics but resumed again with improved gold prices in 1980. An additional 737 holes were drilled through mid-1981, and a decision was made to move ahead with development. Drilling continued through 1983 totalling 335,000 ft in 1,236 holes for the project to date. Of this total, 20 were core drilled, 40 were rotary percussion, and 1,176 were drilled by reverse circulation down-the-hole hammer method. The disproportionate number of reverse circulation drilling was necessitated by the extensive old underground workings which were caved or backfilled. Drill hole density for the Mercur Hill area was about 125 ft, while approximately 200 ft for the remaining three ore bodies.

Ore Reserves

An early polygonal reserve estimate (1980) was made on Mercur Hill, representing 434 exploration drill holes and resulting in 6.8 million st at 0.102 oz/st gold. These reserves were favorably checked by manual cross sections.

The first formalized estimates were made in 1980 by Getty, using polygonal and manual cross section. These estimates were followed in 1981 by inverse distance squared calculations. The final mine economic estimates were made by using an average of the inverse distance squared and polygonal results, and in August of 1981 Fluor Mining and Metals Inc. was requested to do a geostatistical study of the Mercur Hill deposit's grade and extractions. The result of this work indicated that 93% of the ore could be treated by conventional cyanidation, with an expected recovery of over 80%. Based on these results, Getty proceeded with a plan to construct a 3,000 stpd carbon-in-leach plant without pressure oxidation which had been the basis for the original mine financial analyses. Obviously, this result improved the capital and operating cost estimates for the property. Geostatistical studies were continued using indicator kriging to produce a geostatistical block model of the Mercur Hill reserves.

Finally, for mine planning purposes the inverse distance squared method was chosen. The pit bench height was fixed at 10 feet in order to increase oxide ore extraction and grade.

Since mining commenced in January of 1983, grade and tonnage have reasonably paralleled the inverse squared reserve estimate. Mine oxide ore production from January 1983 to February 1987 as compared to the inverse distance squared estimate is as follows:

	ID^2	Actual Tons
Tons	5,272,948	4,838,656
Grade	.077 oz/T	.088 oz/T
Contained Ounces	406,017	425,802

The current reserves at Mercur as of January 1, 1987 for all four ore bodies for proven, probable and possible categories are:

Oxide Reserves	Mill Ore	Heap Leach Ore
Proven & Probable (Tons)	13,200,000	8,700,000
Grade (Oz per Ton)	0.072	0.033
Possible (Tons)	1,400,000	
Grade (Oz per Ton)	0.080	
Refractory Reserves		
Proven & Probable (Tons)	5,270,000	
Grade (Oz per Ton)	0.063	

Mine Planning and Ore Grade Control

The Mercur Gold Project uses the geostatistical method of kriging to determine grade estimates for its daily ore control program. Due to Mercur's structured setting (numerous high angle faults) and two previous periods of underground mining, ore distribution is extremely variable within a short distance or range. The geostatistical method takes these factors into account to produce the best estimate in a given ore block.

Mining at Mercur entails waste removal on 20-foot lifts, while ore removal occurs on 10-foot benches. To accomplish this, blasthole drilling uses an 18 x 18 foot spacing to a depth of 20 feet. Drill cuttings are sampled in two 10-foot intervals and taken to Mercur's assay lab for analysis. An amenability test simulating mill recovery is run on each ore sample, resulting in a head and tails assay.

All drill patterns are surveyed in and computerized at which time the assay data is added to produce two 10-foot blasthole assay maps for the 20-foot bench. Once this data is verified, the head and tail are both kriged with the percent recovery calculated against the kriged head value. All kriging takes place on 12.5-foot centers. This information is then used to produce a contour map based on the current grade and extraction cutoffs being used.

Once this is completed, an ore zone map is produced with survey points outlining the various ore zones. Each ore type is then marked in the field using a different colored pin flag, while an ore control map is provided to the Mine Department.

Ore is selectively mined using the following grade and CIL (tail) cutoffs.

Ore Type	Grade	Projected Recovery
High Grade Oxide	≥.090	≥60%
Low Grade Oxide	.040-.090	≥60%
High Grade Refractory	≥.090	≥60%
Low Grade Refractory	.040-.090	≥60%
Subore (Leach Grade)	.025-.040	≥60%

Mining practices at Mercur rely heavily on the foremen and shovel operators to selectively mine what can often be a mosaic of differing ore types both in grade and recovery. Geologic control is also utilized where significant structural and stratigraphic influence occur. Pit mapping on a 1:12000 and 1:6000 scale produces both plan maps and cross sections which are made available to the Ore Control Department to assist in grade control.

Mine planning at Mercur originated with the mineral inventory system and mine design being handled off site, utilizing a corporate computer system. The mineral inventory was developed by inverse methods using Mintec's Mine Evaluation Design System (MEDS), while the mine designs were developed by a floating cone, also on a MEDS-based system. More recently the mine has become self-sufficient in terms of these functions. The present mine design represents hand-created improvements on the old floating cone designs, allowing for new drilling results, slope stability limitations, haul road locations, present economics and preferred geometric arrangements reflecting the Mercur mining practice. The hand-design pits are digitized and mineable reserves generated from the existing mineral inventory. Use of the old MEDS inventory is being phased out. A new mineral inventory, based on the latest drilling, better geologic control and in-house software developed specifically for the Mercur deposit, is replacing MEDS.

The mechanics of mine planning and scheduling have been continually developed at Mercur. Weekly planning meetings which lay out critical goals for the following week and general goals for longer periods are held involving several levels of both operating and technical personnel. Early each month a plan for that month is created by the Mine Engineering

Department and reviewed by Mill and Mine Department personnel. The plan involves a bench-by-bench schedule of mine production broken down by categories of high grade oxide and refractory ore, low grade oxide and refractory ore, subore (heap leach material), waste and total material. In conjunction with the monthly schedule, a plan map is also created showing actual progress through the end of the previous month, projected progress of the plan month, and projected ore boundaries for the month. These plans incorporate blasthole assay and amenability results, geologic projection, exploration drill logs, and lastly, the computer-derived mineral inventory to project ore through the month. Plans for periods longer than one month rely most heavily on the mineral inventory projections.

Mining

Mining at Mercur has generally followed the original MEDS (Mintec) design. Ore is mined on 10-foot benches, while waste is removed on 20-foot benches. The overall pit slopes, since inception of mining, have averaged 38 degrees. Safety berms, 40 feet wide, are left every 100 vertical feet.

As previously mentioned, Mercur ore bodies are found in four general areas, i.e., Mercur Hill, Marion Hill, Sacramento, and Golden Gate. Mercur Hill has been continuously mined since start-up and will be completed in approximately 14 months. Marion Hill was opened early this year and will be sequentially followed by Sacramento and Golden Gate. Total mine life is approximately 14 years assuming present mine plan and economics.

The mine's remaining overall waste-to-ore ratio for all pits is 3.5 to 1. Mercur currently moves approximately 46,000 tons of material daily on two 9-hour shifts, five days per week. Major mine equipment consists of two Hitachi 801 hydraulic shovels equipped with 11 cubic yard buckets, two Caterpillar 992C front-end loaders with 13 cubic yard buckets, nine Wabco 85-ton haul trucks, two Wabco 75-ton haul trucks, three Ingersoll Rand IRDM25TH blasthole drills, and one Ingersoll Rand IRTH100 exploration drill, plus the usual mine support equipment.

Blasthole drilling is done on an 18 x 18 foot pattern. The holes are a nominal 6-1/4 inch, 25 feet deep in order to complete a 20-foot bench. A mixture of ammonium nitrate and diesel fuel (ANFO) is used as blasting agent. As previously mentioned, samples of each hole at a 10-foot and 20-foot interval are assayed and amenabilities determined. Blastholes are surveyed and relocated after the blast, followed by the placement of colored flags which identify general ore type

boundaries. These flags guide the mine operators in loading out ore and waste and directing haulage trucks to the appropriate ore or waste stockpiles.

Haul distances at Mercur do not exceed 1.5 miles and average less than 1 mile. Roads are wide, bermed and very well maintained as exemplified by very low tire wear. Haul grades rarely exceed 10% and average about 6%.

The mine is responsible for placement of ore on dump leach pads and assists in major construction projects such as new leach dumps and tailings dam phased construction.

Mining costs for 1986 were:

	Mining $ Cost/Ton
Roads & Dumps	.08
Drilling	.07
Blasting	.05
Loading	.10
Hauling	.23
General	.22
Total Mine	.75

Milling

Ore delivered from the mine is stockpiled according to grade and amenability. All refractory ore (less than 60% amenable) has been stockpiled since the purchase of Mercur by Barrick in mid-1985. Prior to this, refractory ore was occasionally blended in small amounts with oxide ore mill feed. Oxide ore is divided into low grade (.040-.090 ounces per ton) and high grade (greater than .090 ounces per ton). Oxide subore (.025-.04 ounces per ton) is stockpiled for dump leach production. Current mill feed is a variable blend of low and high grade oxide ore, depending on grade and mine production.

Stockpiled run-of-the-mine ore is retrieved by front-end loader. High grade oxide is delivered to crushing, while low grade oxide can be moved to the screening plant for upgrading. The crusher is a Kue-Ken 42 x 48 inch jaw crusher, discharging a minus 8-inch product to a radial slewing stacker. The low grade screening plant oversize (+3-1/2 inch) is either sent to waste or dump leach, depending on assay, while undersize is discharged to the radial slewing stacker. Fine ore piles from the slewing stacker are moved by front-end loader to the mill reclaim hopper fitted with a 24-inch

grizzly. The hopper feeds the main mill feed conveyor onto which is fed pebble lime for pH control. The conveyor discharges to a 6 x 20 foot Koppers steel-lined semi-autogenous (SAG) mill. The mill is powered by a 1,250 hp synchronous motor, interchangeable with the ball mill driving motor. The SAG mill discharges upon a double deck 8 x 16 foot Tyler vibrating screen. Plus 1-inch rock is either returned to the SAG mill or conveyed outside the mill building for heap leaching or waste disposal. Plus 3/16-inch material is returned to the SAG mill, while undersize drops directly in the cyclone feed sump which feeds four, 26-inch Krebs cyclones. Cyclone underflow is discharged to a 12.5 x 15.5 foot Koppers rubber-lined ball mill. Cyclone overflow at 80% minus 200 mesh is screened for wood chip removal on four 4 x 8 foot horizontal, 30-mesh vibrating screens. Screen underflow is thickened in a 150-foot-diameter EIMCO thickener to 55% solids. Underflow is then pumped to two slurry storage tanks. These tanks provide for steady feed up to six hours to the leach plant during periods of grinding plant maintenance down time.

The carbon-in-leach plant (CIL) consists of 14 tanks, 30-foot diameter by 32-foot high, arranged in 2 banks of 7 for parallel flow. Residence time is approximately 20 hours with either flow arrangement. Within the leach tank is a chord-type, 24-mesh, air-swept screen launder to retain advanced carbon. Carbon (coconut shell charcoal) is advanced countercurrent to the slurry by a recessed impeller pump within each tank. Leach tanks are agitated by twin impeller, Lightnin A310 agitators. A pH of approximately 11 is maintained in at least the first four tanks. Cyanide is normally added to the first leach tank, while new and reactivated carbon is fed to the last. Leached slurry exits the last leach tank, passing through a carbon safety screen, sampler, and on to the tailings pump circuit. Tailings are pumped to the impoundment area 1.5 miles distant (uphill) by four Denver SRL pumps arranged in series through a 12-inch-diameter steel pipeline. Clear water is reclaimed by a barge-floated pump for use in the mill grinding circuit or for dilution in the leach plant circuit and dump leach solution.

Loaded carbon (70-100 oz/T) and pulp from the first CIL tank are pumped to a 2 x 6 foot, 28-mesh inclined screen, thus separating the carbon from the pulp which is returned to the circuit. Screened carbon in 5-ton batches is then given a 3% nitric acid wash to remove deleterious trace metallic impurities and calcium carbonates. Wash waters are neutralized, and metallic elements are precipitated with sodium sulfide before being pumped to tailings.

Washed loaded carbon is educted to a preheat tank, containing a caustic-sodium cyanide solution, which warms the carbon prior to stripping. Carbon in 5-ton batches is dropped from the preheat tank to a 5 x 21 foot straight-sided strip column. Stripping is effected at 130 degrees C (260 degrees F) and 60 psi using the 1% caustic-sodium cyanide solution. Pregnant liquor from the strip column preheats the barren strip solution by passing through a heat exchanger. The pregnant solution is reheated with a steam heat exchanger prior to electrowinning using 4 HBC cells. Gold, silver, and other metals are plated out on steel wool cathodes. Plated cathodes are removed, washed, and transferred to an air-swept retort to remove mercury.

Retorted cathodes are smelted in an Ajax 175KW-960 cycle, tilting induction furnace. Slag and metal are poured into cone-shaped button molds, cooled, and separated from the slag. Accumulated buttons are remelted and poured to 500-troy-ounce bars.

Carbon is stripped to less than 3 oz/ton and is educted to a propane-fired, 3-foot-diameter by 27.3-foot-long rotary calciner where chemical reactivation is effected under a steam atmosphere. Existing hot carbon is quenched and sized on a rotary, 24-mesh screen, stored in water, and educted to the last CIL tank. Fresh carbon (6 x 16 mesh) is preconditioned with water before being pumped over the sizing screen.

Mill costs per ton milled for 1986 were:

Crushing and Screening	$0.66
Ore Handling	0.36
Grinding and Thickening	1.59
Carbon in Leach	1.55
Carbon Regeneration	0.17
Bullion	0.37
Reagent Mixing & Tailings	0.16
Supervision	1.14
Metallurgical & Assay Laboratory	0.51
Total	$6.51

Tailings

Tailings are pumped into an impoundment area approximately 1.5 miles distant and just north of the mill site. The area is formed by a dam across the mouth of a canyon. The clay core dam design comprises six zones of material for the ultimate 275-foot-high embankment. It is currently planned to continue to build the dam in phases over the life of the mine. An initial three-year capacity was

completed during September of 1983, with another phase added last year. The impoundment area is designed to meet a rigid material specification for both embankment and clay liner by the State of Utah's water pollution regulatory authority. The entire impoundment area is clay-lined to meet a permeability specification of 1.0×10^{-7} CM per sec. Current investigations have been initiated to look at the feasibility of sub-aerial deposition to significantly reduce future costs which are projected to average at least one dollar per ton of tailings stored.

Dump Leaching

Run-of-the-mine oxide subore (0.025-0.040 oz/ton) comprises the main feed to the leach dumps. Since Mercur has little or no flat land areas, all leaching must be done in canyons. Construction of these areas becomes somewhat complicated in that the State Bureau of Water Pollution Control requires that a 12-inch lift of compacted clay be placed under a 40-mil synthetic HDPE liner over which is laid a geotech membrane and a plastic drain net. The geotech is used to help protect the plastic liner, while the drain net promotes fluid flow.

Prior to loading a new dump, a layer of old tailings (-5/16 inch) is placed as a protection for the synthetic liner. Over this is placed run-of-the-mine ore which is dumped from haul trucks and pushed into a more uniform lift of about 16 feet high. The average lift varies in tonnage due to the canyon shape but generally averages in the 100,000 to 120,000 ton range.

Wobbler-type sprinklers are used to sprinkle the lift with cyanide solution at an average coverage of .002 gpm/sq ft. Percolated solutions are collected in pipes beneath the dump, accumulating in a sump which is continually pumped by submersible pumps to the mill's leach plant (CIL) where it serves as dilution, and gold is recovered on the activated carbon already in the CIL circuit tanks.

Dump leach costs for 1987 through May were $119.24/troy oz or $0.45/ton of ore milled.

Pressure Oxidation (Autoclaving)

Refractory ore, less than 60% amenable to simulated mill recovery (CIL) cyanidation bottle roll tests, has been stockpiled since mine start. As of June 1, 1987 there were 570,000 tons in stockpile, grading 0.07 troy ounces per ton. In addition to these reserves, it is expected that over the

life of the mine that approximately an additional 1.5 million tons grading 0.10 troy ounces per ton will be mined.

This reserve has prompted test work at Mercur since 1981 directed at development of a process to economically treat this ore. Based on test work completed in 1982, a US patent was issued to Getty Mining Company covering a pressure oxidation process in an alkaline environment to treat Mercur refractory ores.

In October of 1986 Barrick made the decision to engineer and construct a 750-ton-per-day addition to the Mercur mill to treat refractory ore. Engineering for this construction began in January 1987 and has now progressed through detailed engineering with the first on-site work commencing during the latter part of June. Completion and start-up is expected in January 1988.

The flowsheet selected utilizes the existing crushing and grinding circuit and stores slurry in tanks for continuous autoclave processing. Ground slurry is thickened in a new 65-foot, high-rate thickener to 50% solids and pumped to three stages of heat-up utilizing splash towers to which recycled steam from the autoclave discharge is introduced. Pressure and temperature are raised from atmospheric and ambient to 437 degrees F and 475 psi respectively. Pumping is accomplished by a series of centrifugal pumps and one positive displacement pump. Slurry is then introduced to the autoclave, a horizontal, cylindrical unit, 12 feet in diameter and 46 feet long. The unit is carbon steel and lined with a proprietary refractory material. It is separated into four compartments by stainless steel baffles. Each compartment is separately agitated by single impeller mixers. Oxygen, supplied from a storage tank, is introduced to each autoclave compartment. Liquid oxygen is delivered on site by truck from a nearby oxygen plant. Exiting slurry passes through three stages of pressure letdown in which flash steam is condensed. Chokes are situated between each stage of letdown. Slurry from the final stage, at about 200 degrees F, is pumped through a cooling tower or heat exchangers which brings the temperature down to about 80 degrees F for introduction to the CIL circuit. Three separate CIL tanks are dedicated to the autoclaved product as fresh carbon (highest activation) must be used to minimize preg robbing and optimize recovery. After leaching, the slurry is introduced to the existing CIL tailings circuit. Flow through the autoclave CIL circuit is concurrent, versus the existing plant's co-current flow, in order to optimize gold loading. Alkalinity of a pH of about 11 is maintained in the circuit by introduction of lime in the grinding circuit and a lesser addition of caustic after thickening. Loaded carbon from the CIL is screened separately

and introduced to the existing stripping circuit previously discussed.

Sulfur content of the refractory ore will average about 1.7% sulfide sulfur and will therefore require that steam be continually introduced to the process. A new 20,000 lb/hour propane-fired boiler will provide this need.

Estimated operating costs are as follows:

Labor	$2.22/ton of ore
Reagents and Fuel	5.51
Power	.73
Total Autoclave	$8.46

Acknowledgment:

The author is grateful to Messrs. Michael Richardson, Tracy Shrier, and Edward Maurer of the Mercur staff for their contributions to this paper.

BARRICK MERCUR GOLD MINE
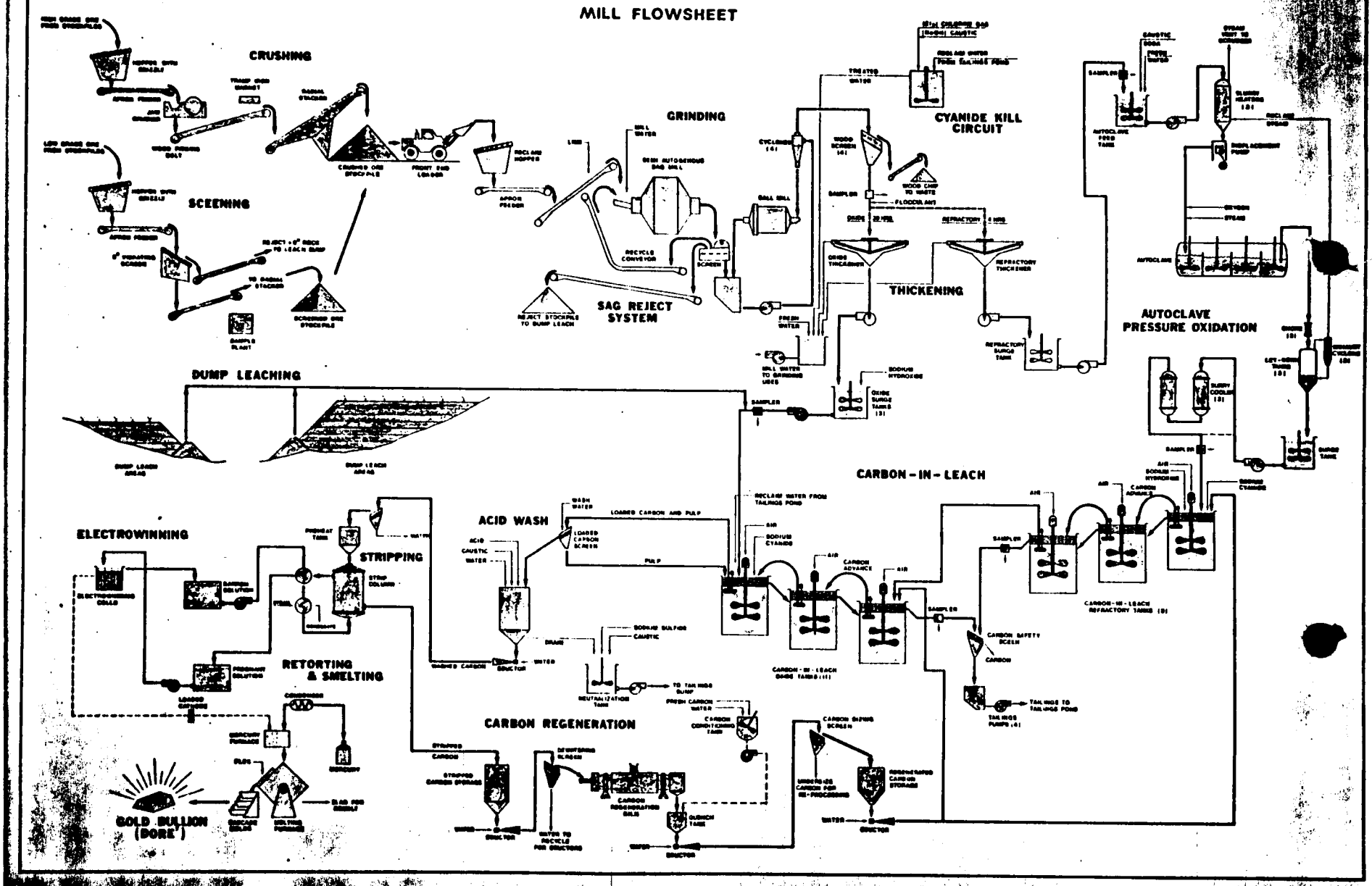
MILL FLOWSHEET