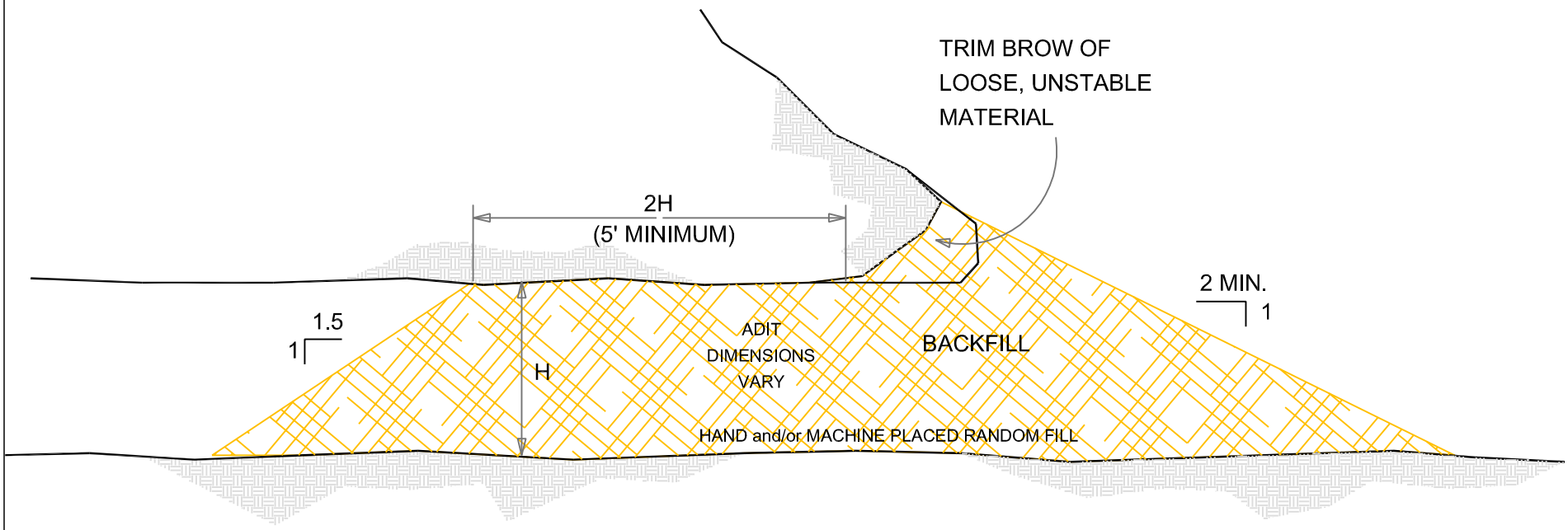

Utah Oil Gas and Mining **UTAH** **NATURAL RESOURCES** **Oil, Gas and Mining** Abandoned Mine Reclamation Program	**MINE RECLAMATION PROJECT**	**ADIT BACKFILL CLOSURE**	
		Scale: as noted	Design: LAA Drafting: JCR
		Refer to Spec Section 0253	Sheet E1 of E18

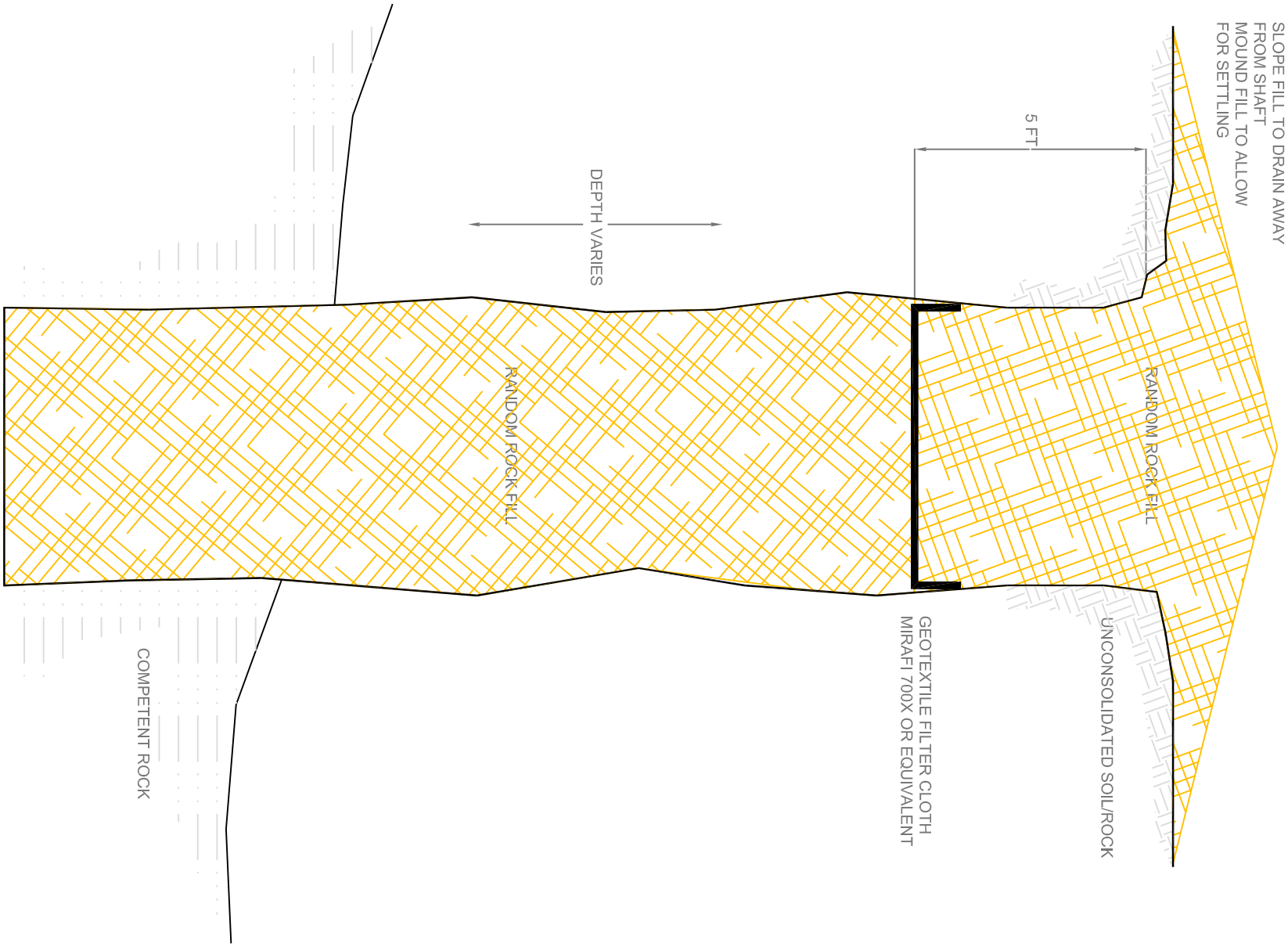

Utah Oil Gas and Mining **UTAH** **NATURAL RESOURCES** **Oil, Gas and Mining** Abandoned Mine Reclamation Program	**MINE RECLAMATION PROJECT**	**SHAFT BACKFILL CLOSURE**	
		Scale: as noted	Design: LAA Drafting: JCR
		Refer to Spec Section 0253	Sheet E2 of E18

TYPICAL ELEVATION

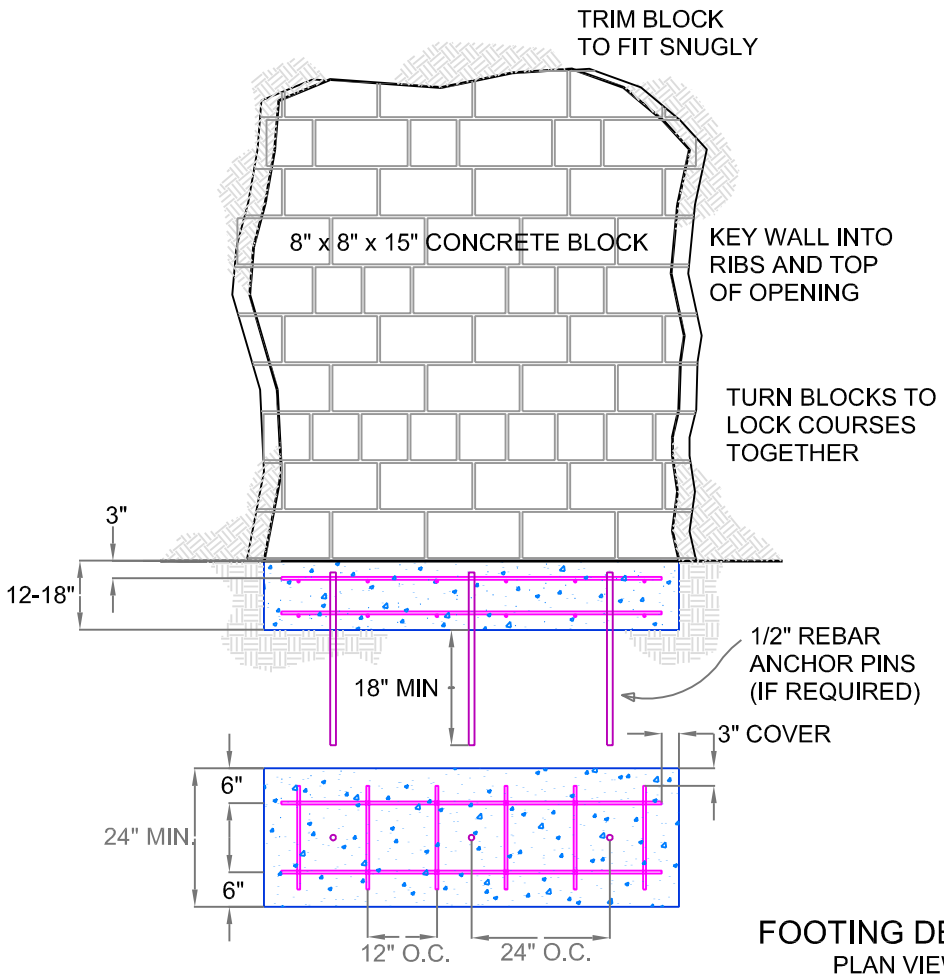

TYPICAL SECTION

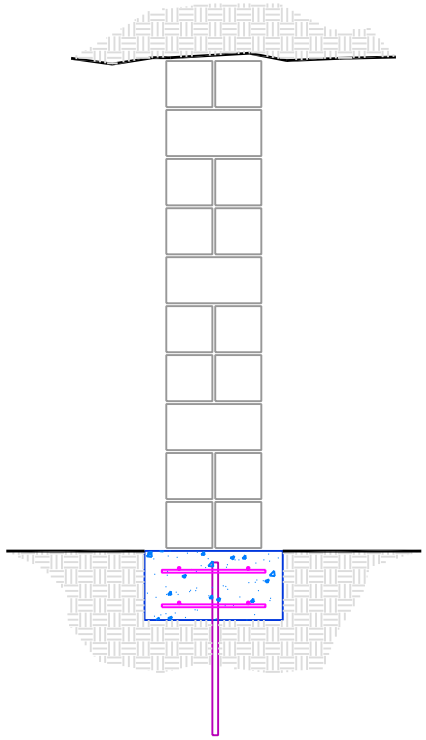

CONCRETE FOOTER AND
REBAR ANCHOR PINS MAY
BE OMITTED WITH OWNER'S
APPROVAL WHERE THE
SILL IS COMPETENT ROCK

FOOTING DETAIL
PLAN VIEW

PILASTER DETAIL

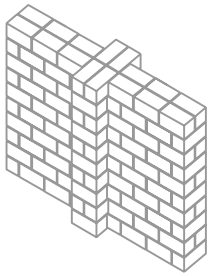

Utah Oil Gas and Mining **UTAH NATURAL RESOURCES** **Oil, Gas and Mining** Abandoned Mine Reclamation Program	**MINE RECLAMATION PROJECT**	**BLOCK WALL CLOSURE**	
		Scale: as noted	Design: LAA Drafting: JCR
		Refer to Spec Section 0253	Sheet E3 of E18

TYPICAL ELEVATION

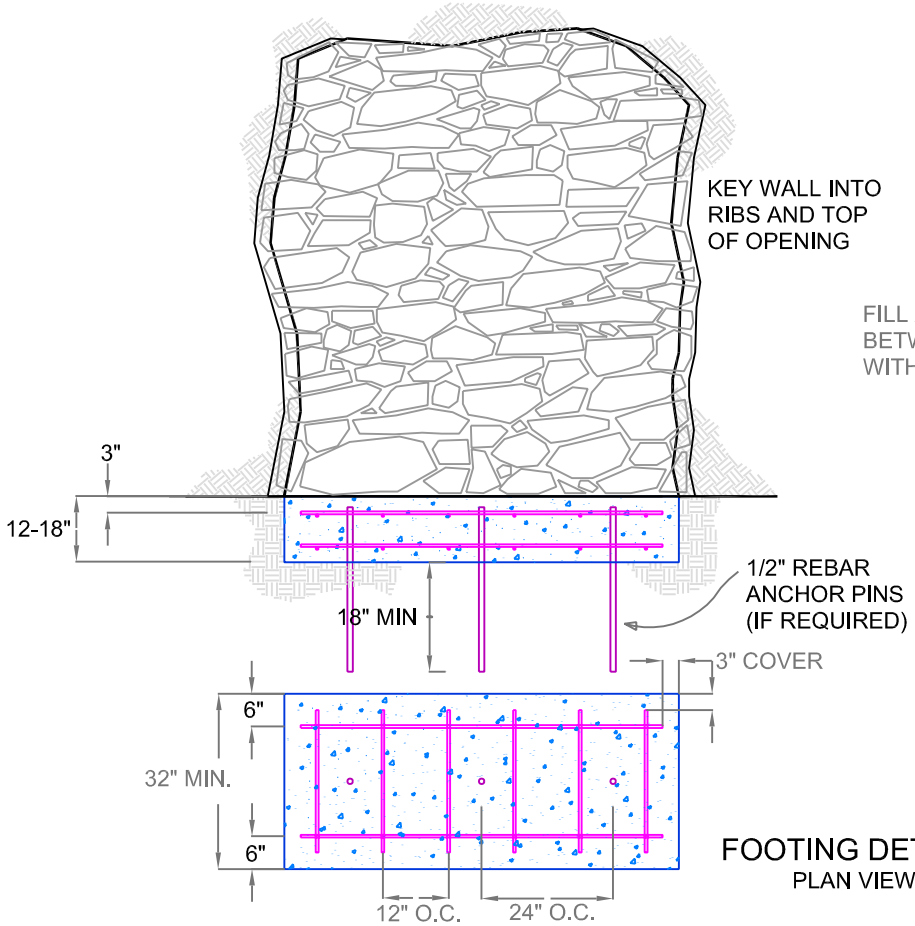

TYPICAL SECTION

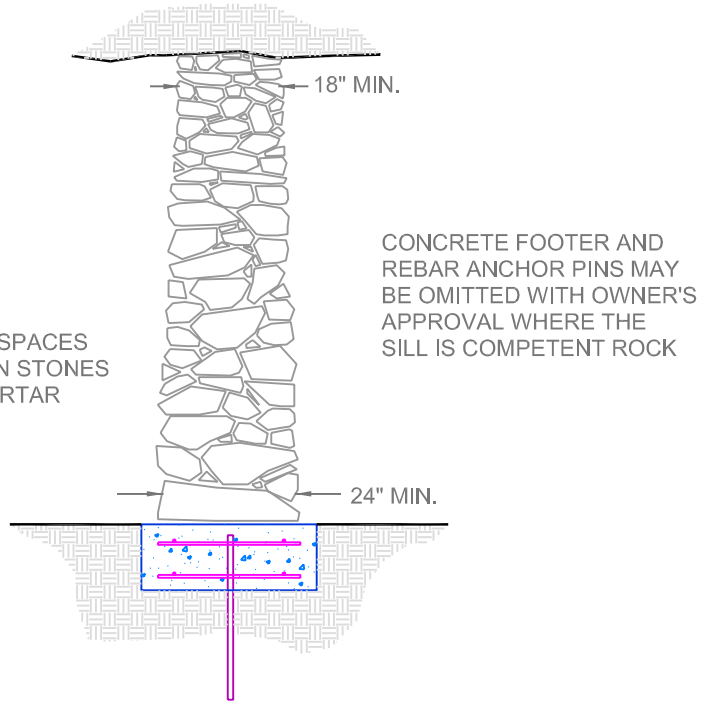

FOOTING DETAIL
PLAN VIEW

Utah Oil Gas and Mining **UTAH NATURAL RESOURCES** **Oil, Gas and Mining** Abandoned Mine Reclamation Program	**MINE RECLAMATION PROJECT**	**NATIVE STONE WALL CLOSURE**	
		Scale: as noted	Design: LAA Drafting: JCR
		Refer to Spec Section 0253	Sheet E4 of E18

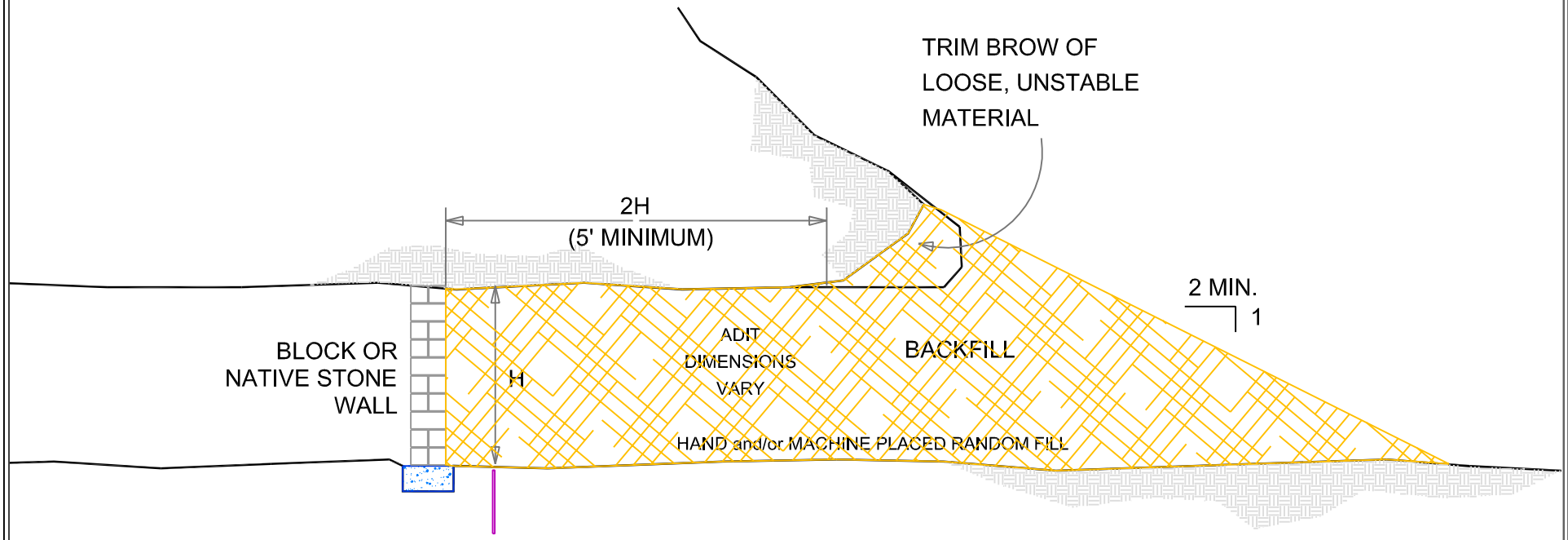

Utah Oil Gas and Mining **UTAH** **NATURAL RESOURCES** **Oil, Gas and Mining** Abandoned Mine Reclamation Program	**MINE RECLAMATION PROJECT**	**WALL AND BACKFILL CLOSURE**	
		Scale: as noted	Design: LAA Drafting: JCR
		Refer to Spec Section 0253	Sheet E5 of E18

TYPICAL ELEVATION

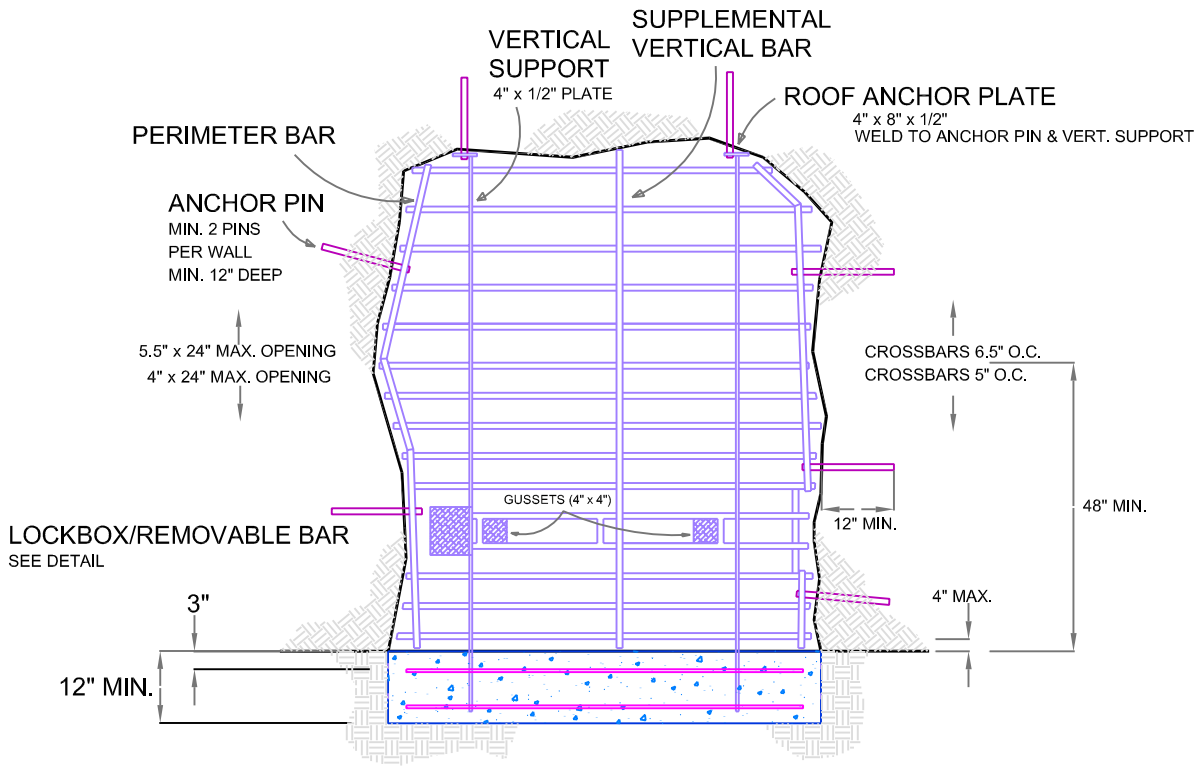

TYPICAL SECTION

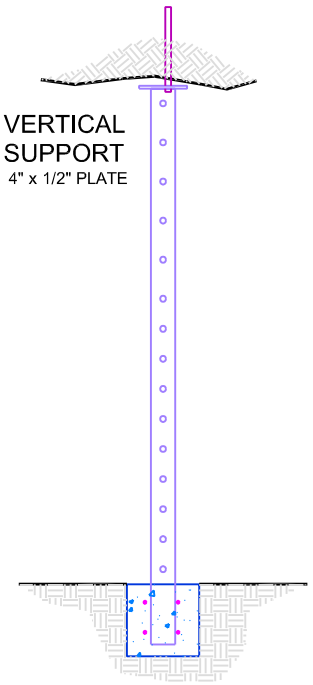

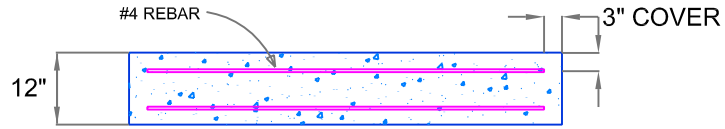

BARS FILLET WELD ALL INTERSECTIONS

FOOTING DETAIL
PLAN VIEW

NOTE: ALL GATE STEEL TO BE 12-14% MANGANESE STEEL (MANGANAL OR EQUIV.)

Utah Oil Gas and Mining **UTAH NATURAL RESOURCES** **Oil, Gas and Mining** Abandoned Mine Reclamation Program	**MINE RECLAMATION PROJECT**	**BAT GATE CLOSURE**	
		Scale: as noted	Design: LAA Drafting: JCR
		Refer to Spec Section 0253	Sheet E6 of E18

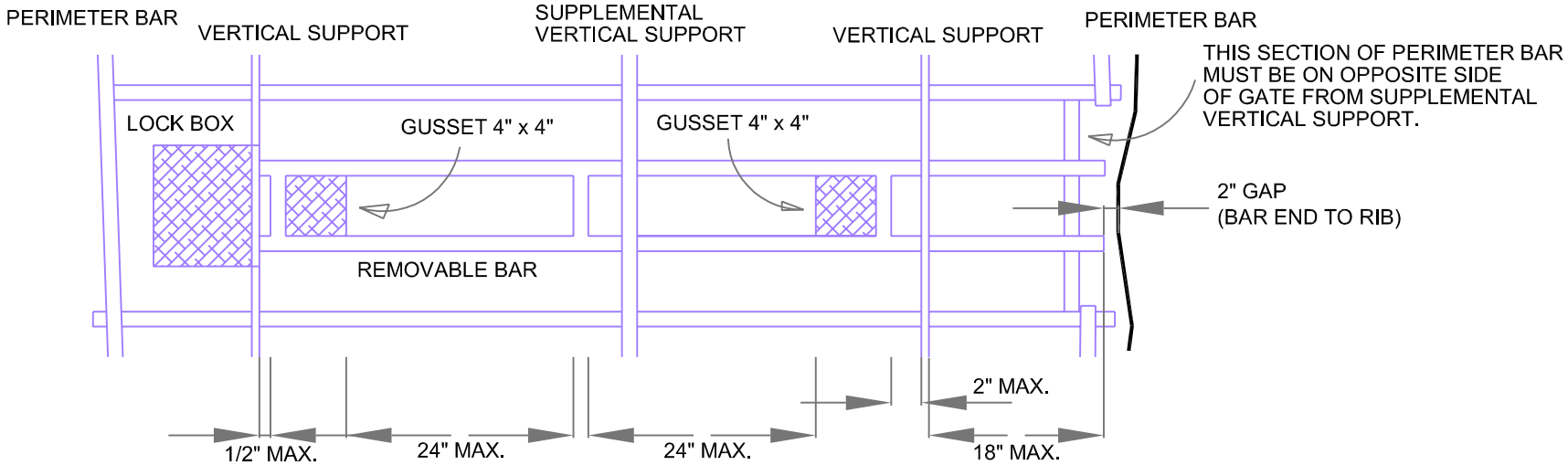

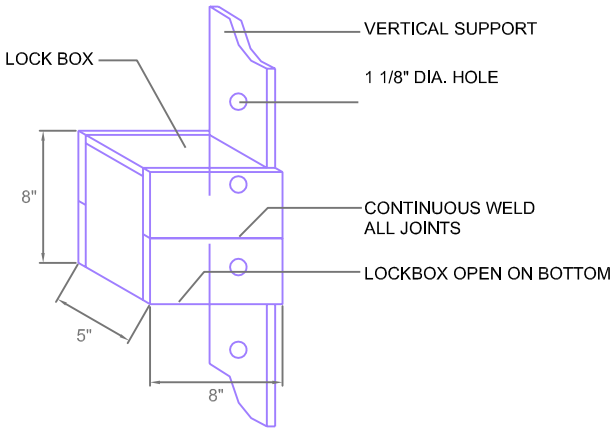

LOCK BOX
OBLIQUE VIEW

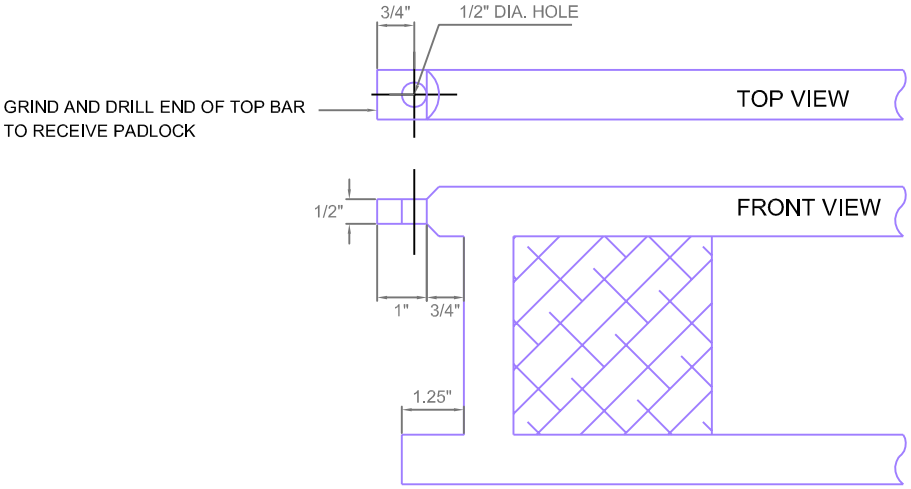

REMOVABLE BAR DETAIL

Utah Oil Gas and Mining **UTAH NATURAL RESOURCES** **Oil, Gas and Mining** Abandoned Mine Reclamation Program	**MINE RECLAMATION PROJECT**	**BAT GATE CLOSURE DETAILS**	
		Scale: as noted	Design: LAA Drafting: JCR
		Refer to Spec Section 0253	Sheet E7 of E18

TYPICAL ELEVATION

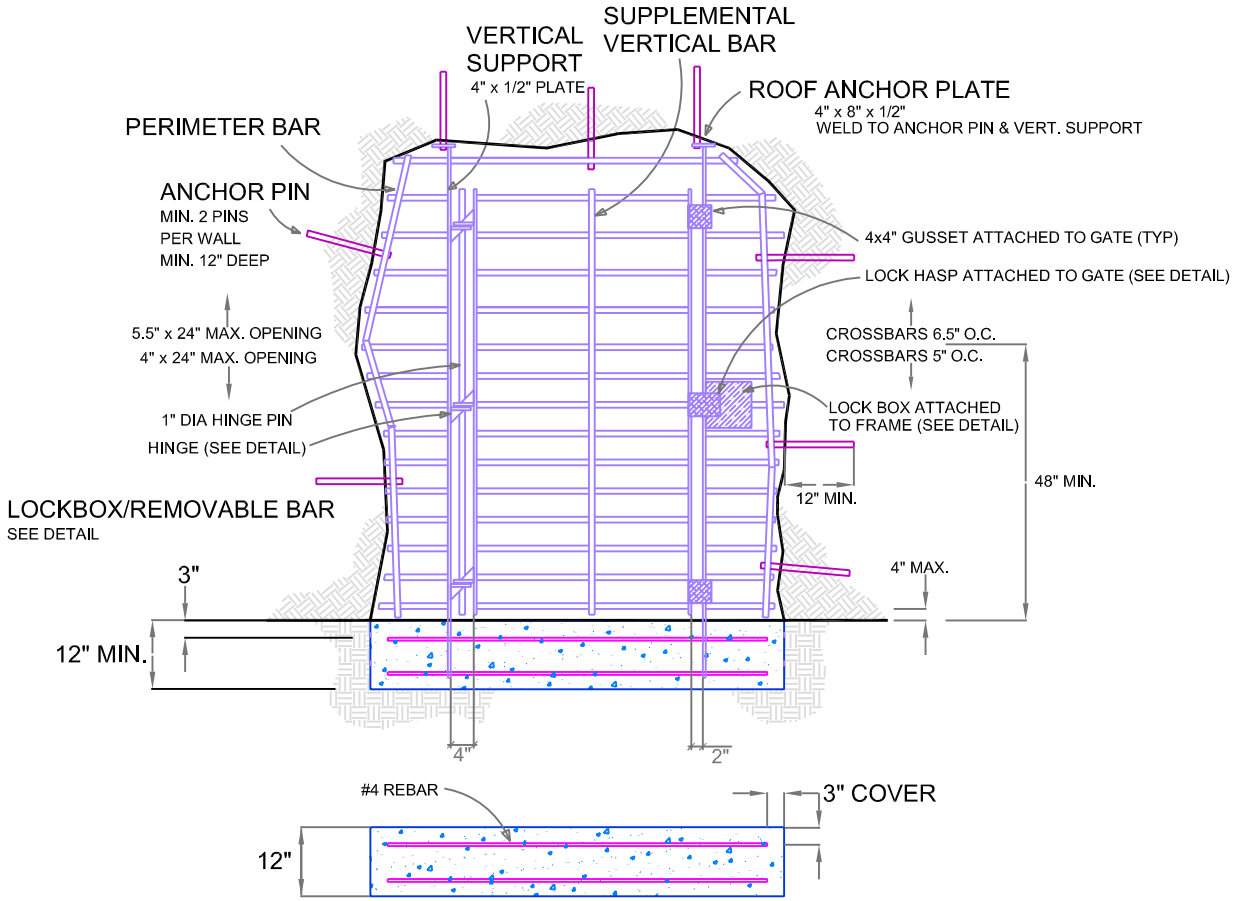

TYPICAL SECTION

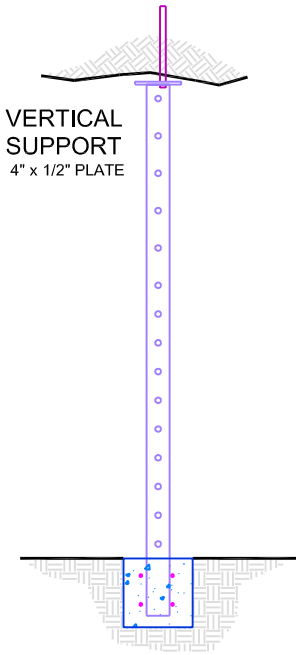

BARS FILLET WELD ALL INTERSECTIONS

FOOTING DETAIL
PLAN VIEW

NOTE: ALL GATE STEEL TO BE 12-14% MANGANESE STEEL (MANGANAL OR EQUIV.)

Utah Oil Gas and Mining **UTAH NATURAL RESOURCES** **Oil, Gas and Mining** Abandoned Mine Reclamation Program	**MINE RECLAMATION PROJECT**	**BAT GATE WITH DOOR CLOSURE**	
		Scale: as noted	Design: LAA Drafting: DR
		Refer to Spec Section 0253	Sheet E8 of E18

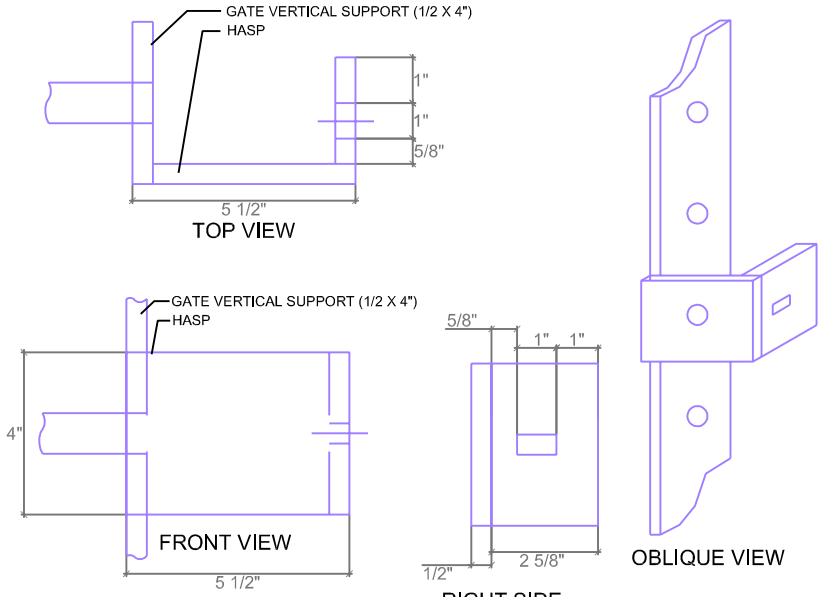

HASP DETAIL

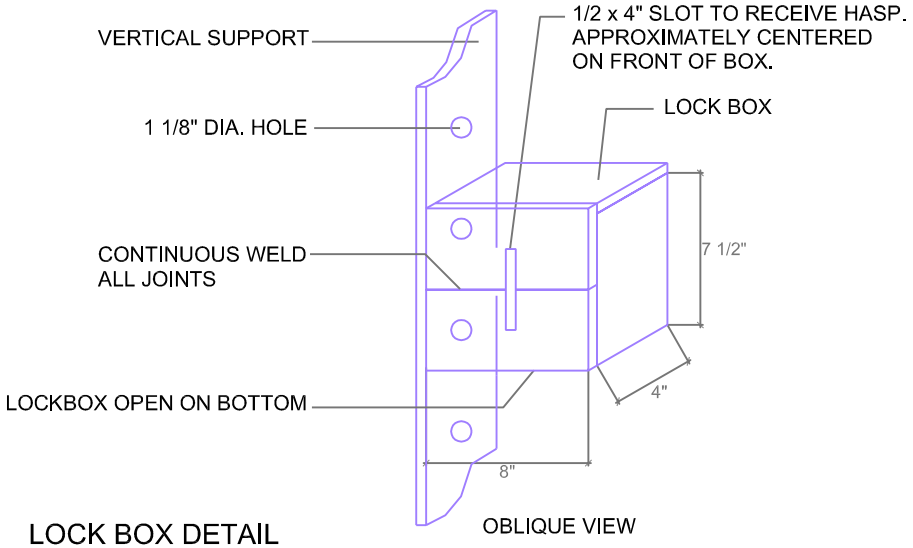

LOCK BOX DETAIL

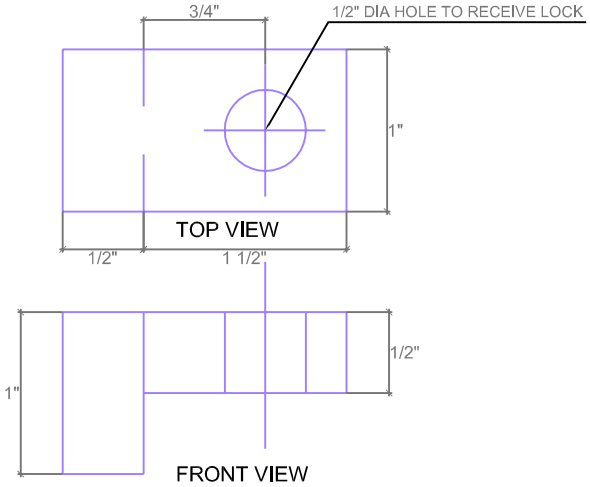

PIN DETAIL

NOTE: ALL GATE STEEL TO BE 12-14% MANGANESE STEEL (MANGANAL OR EQUIV.)

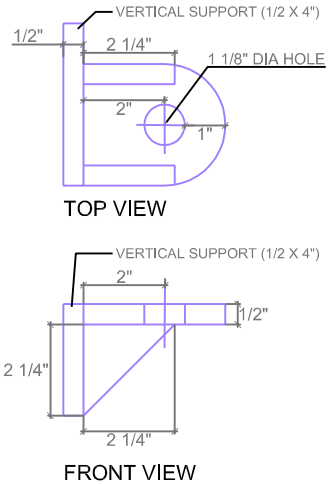

HINGE DETAIL

Utah Oil Gas and Mining	**UTAH NATURAL RESOURCES** **Oil, Gas and Mining** Abandoned Mine Reclamation Program	**MINE RECLAMATION PROJECT**
BAT GATE WITH DOOR CLOSURE DETAILS		
Scale: as noted	Design: LAA Drafting: DR	
Refer to Spec Section 0253	Sheet E9 of E18	

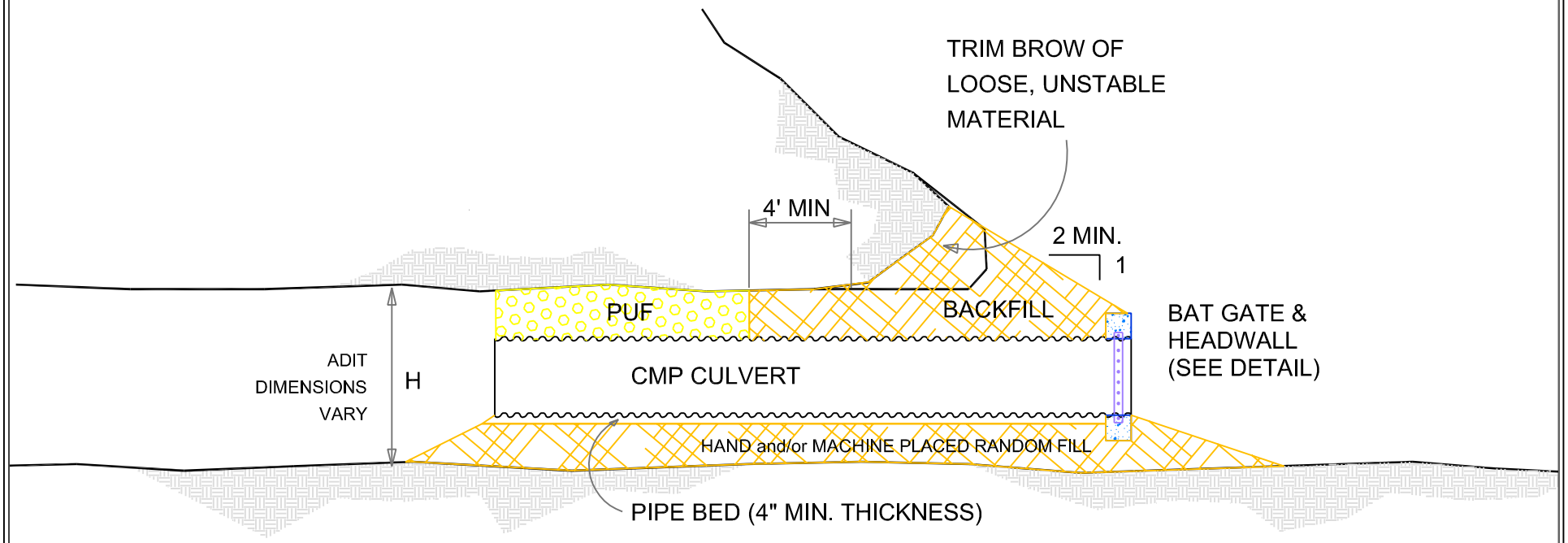

Utah Oil Gas and Mining **UTAH** **NATURAL RESOURCES** **Oil, Gas and Mining** Abandoned Mine Reclamation Program	**MINE RECLAMATION PROJECT**	**CMP BAT GATE CLOSURE**	
		Scale: as noted	Design: LAA Drafting: JCR
		Refer to Spec Section 0253	Sheet E10 of E18

TYPICAL ELEVATION

TYPICAL SECTION

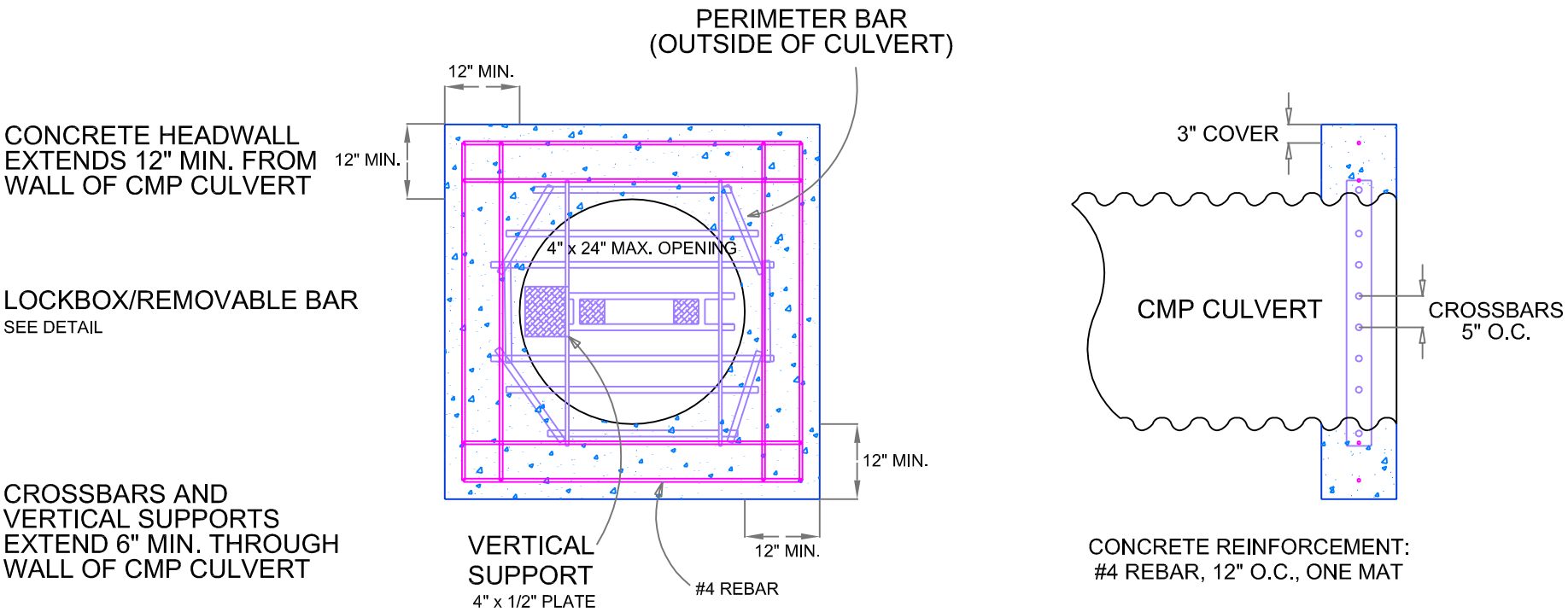

NOTE: ALL GATE STEEL TO BE 12-14% MANGANESE STEEL (MANGANAL OR EQUIV.)

Utah Oil Gas and Mining **UTAH NATURAL RESOURCES** **Oil, Gas and Mining** Abandoned Mine Reclamation Program	**MINE RECLAMATION PROJECT**	**CMP BAT GATE CLOSURE DETAILS**	
		Scale: as noted	Design: LAA Drafting: JCR
		Refer to Spec Section 0253	Sheet E11 of E18

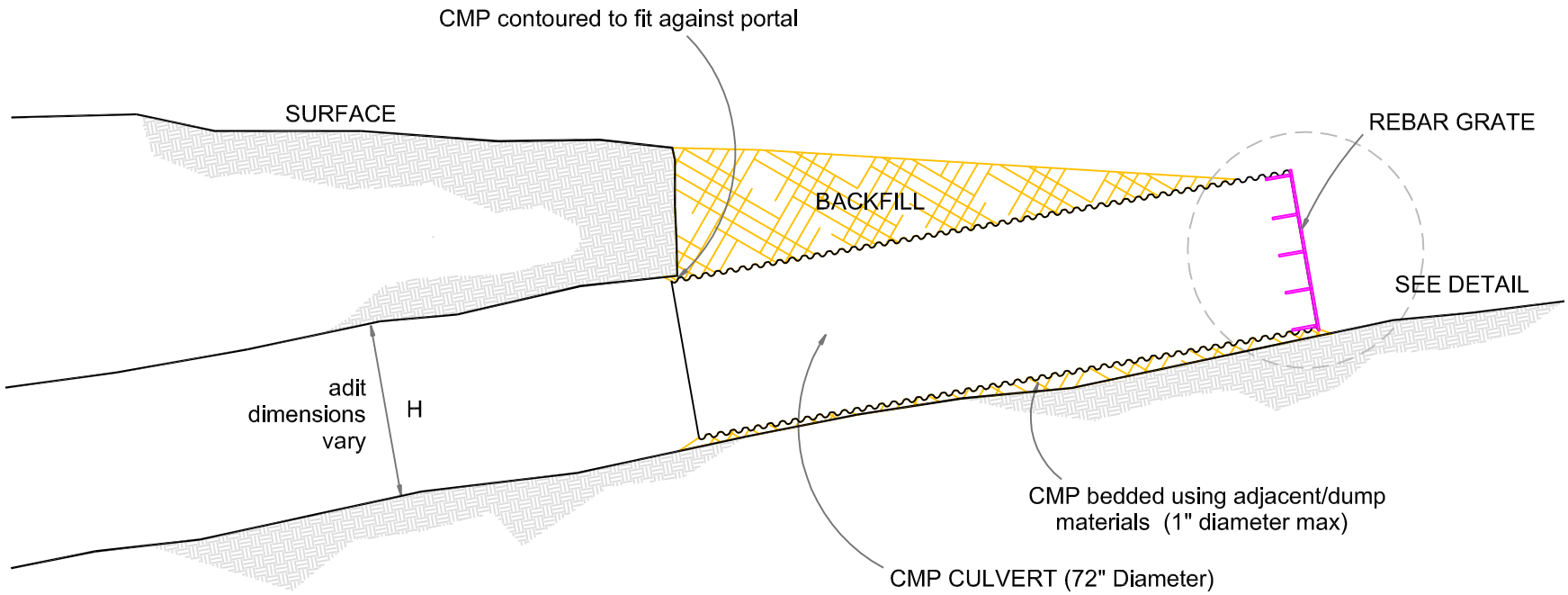

Utah Oil Gas and Mining **UTAH** **NATURAL RESOURCES** **Oil, Gas and Mining** Abandoned Mine Reclamation Program	**MINE RECLAMATION PROJECT**	**CMP/REBAR CLOSURE**	
		Scale: as noted	Design: LAA Drafting: MES
		Refer to Spec Section 0253	Sheet E12 of E18

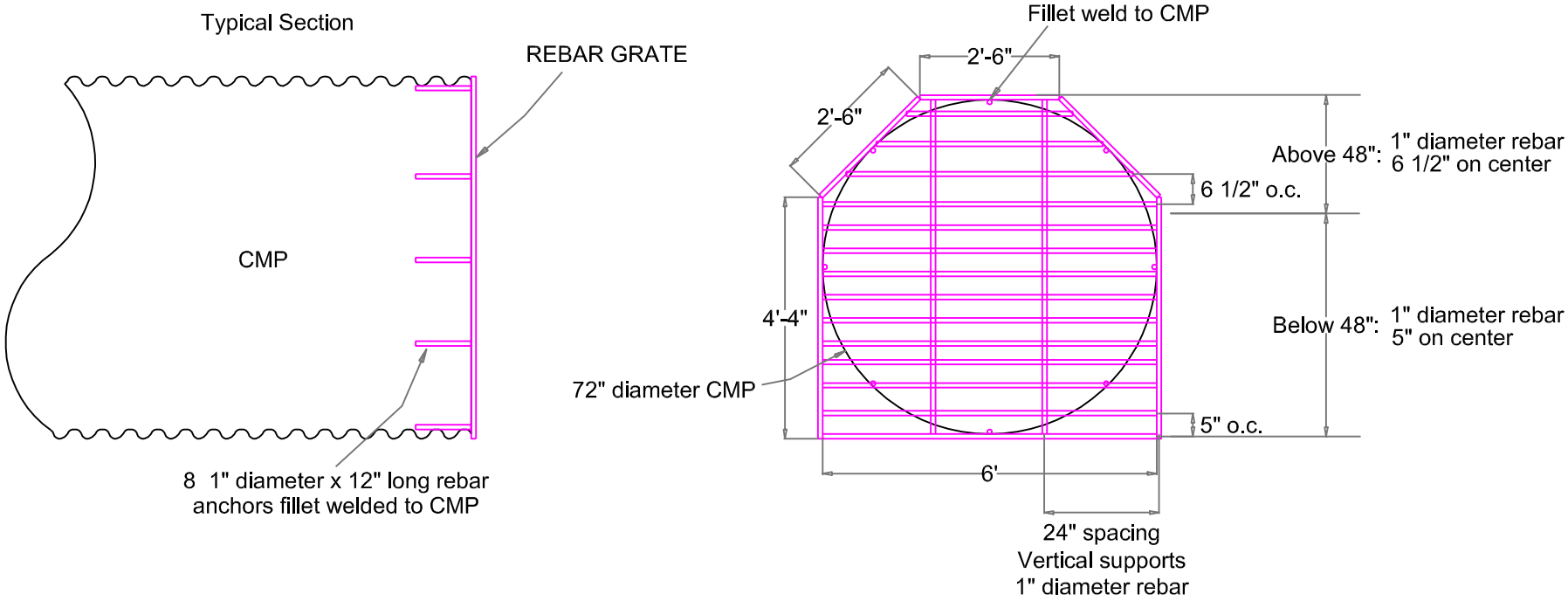

Note: Field dimensions may vary slightly

Utah Oil Gas and Mining **UTAH** **NATURAL RESOURCES** **Oil, Gas and Mining** Abandoned Mine Reclamation Program	**MINE RECLAMATION PROJECT**	**CMP/REBAR CLOSURE DETAILS**	
		Scale: as noted	Design: LAA Drafting: MES
		Refer to Spec Section 0253	Sheet E13 of E18

TYPICAL PLAN

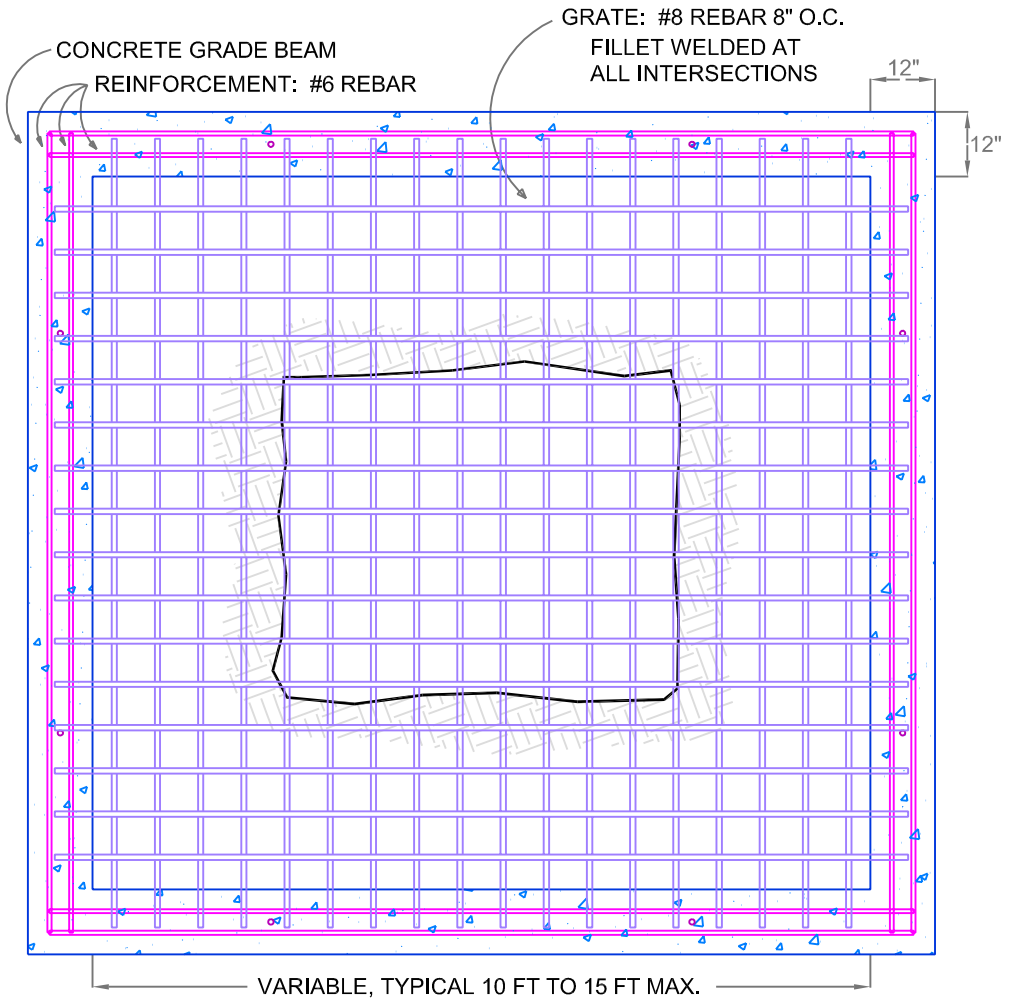

TYPICAL SECTION

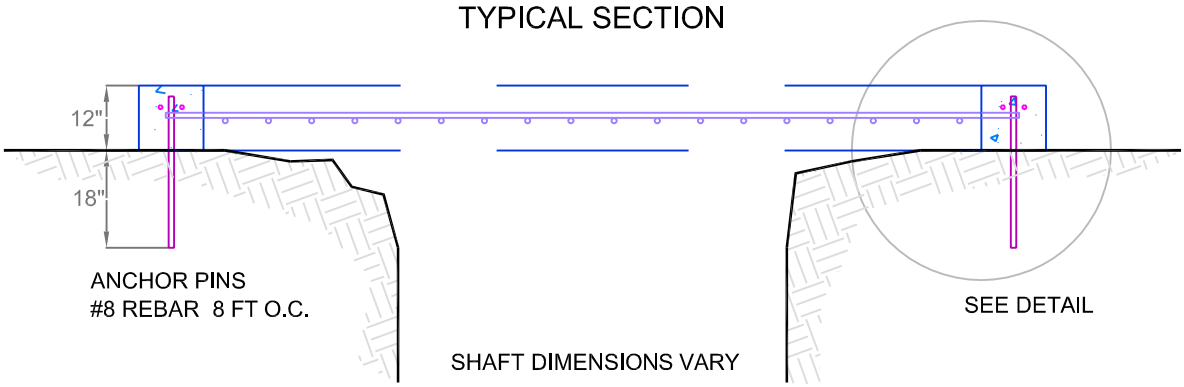

REBAR SHAFT GRATE CLOSURE

Design: LAA Drafting: JCR

Scale: as noted

Sheet E14 of E18

Refer to Spec Section 0253

MINE RECLAMATION PROJECT

UTAH NATURAL RESOURCES
Oil, Gas and Mining
Abandoned Mine Reclamation Program

Utah Oil Gas and Mining

TYPICAL PLAN

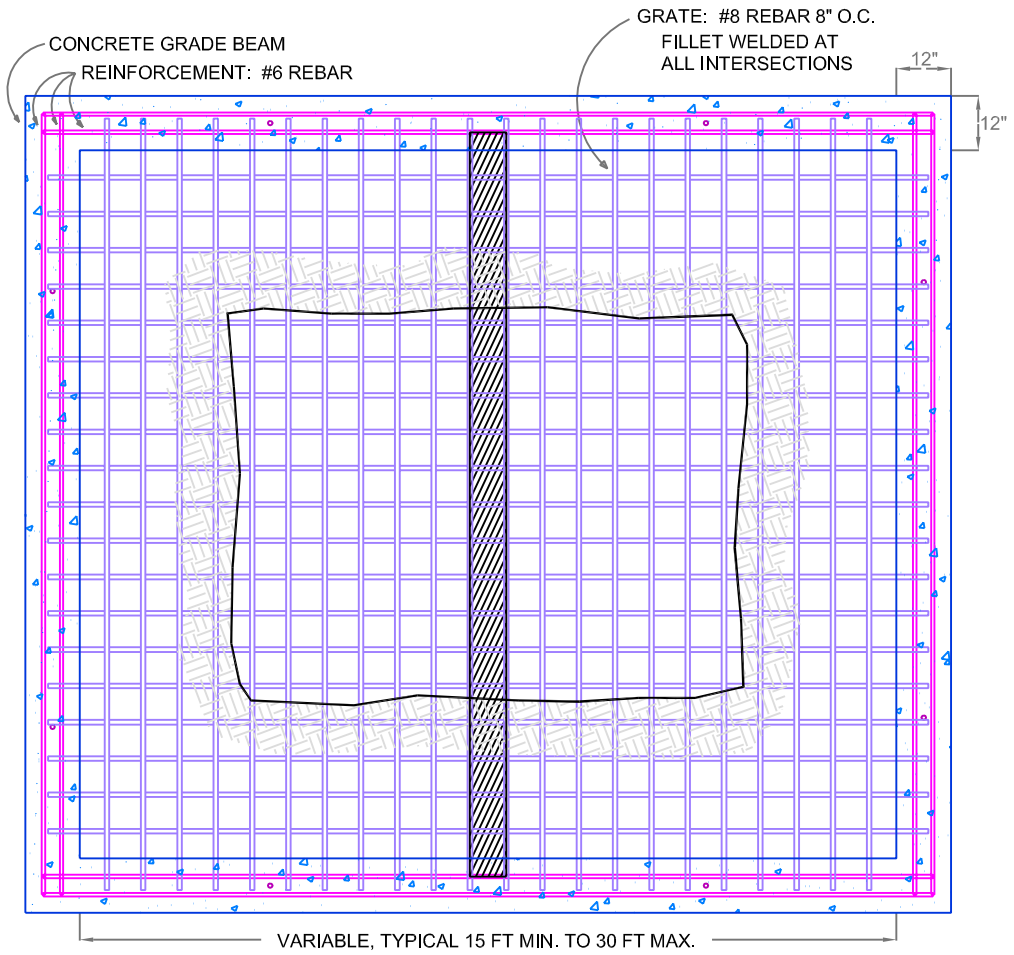

TYPICAL SECTION

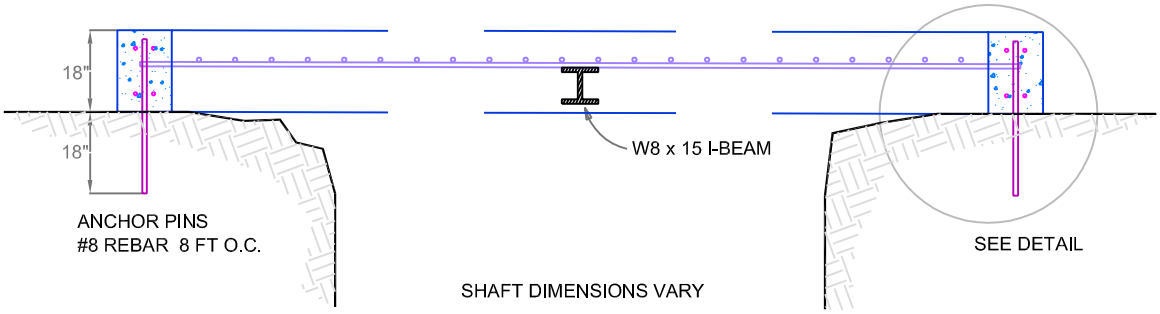

REBAR SHAFT GRATE (WITH I-BEAM)

Scale: as noted

Refer to Spec Section 0253

Design: LAA Drafting: JCR

Sheet E15 of E18

MINE RECLAMATION PROJECT

UTAH NATURAL RESOURCES
Oil, Gas and Mining
Abandoned Mine Reclamation Program

Utah Oil Gas and Mining

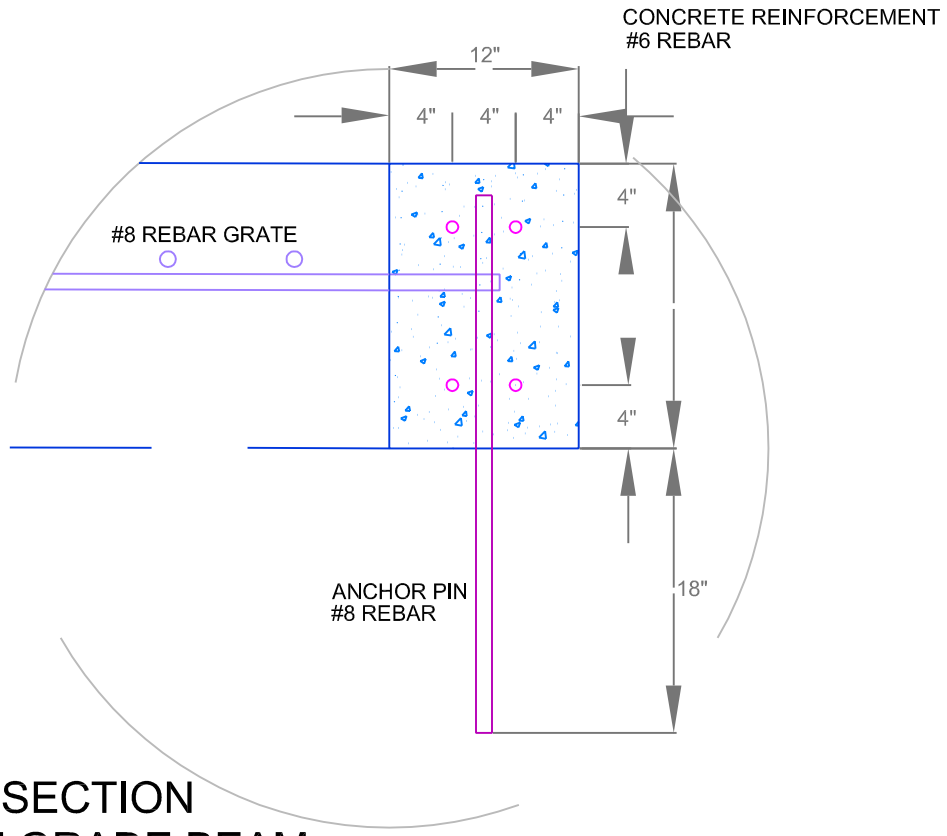

CROSS-SECTION
12" x 18" GRADE BEAM

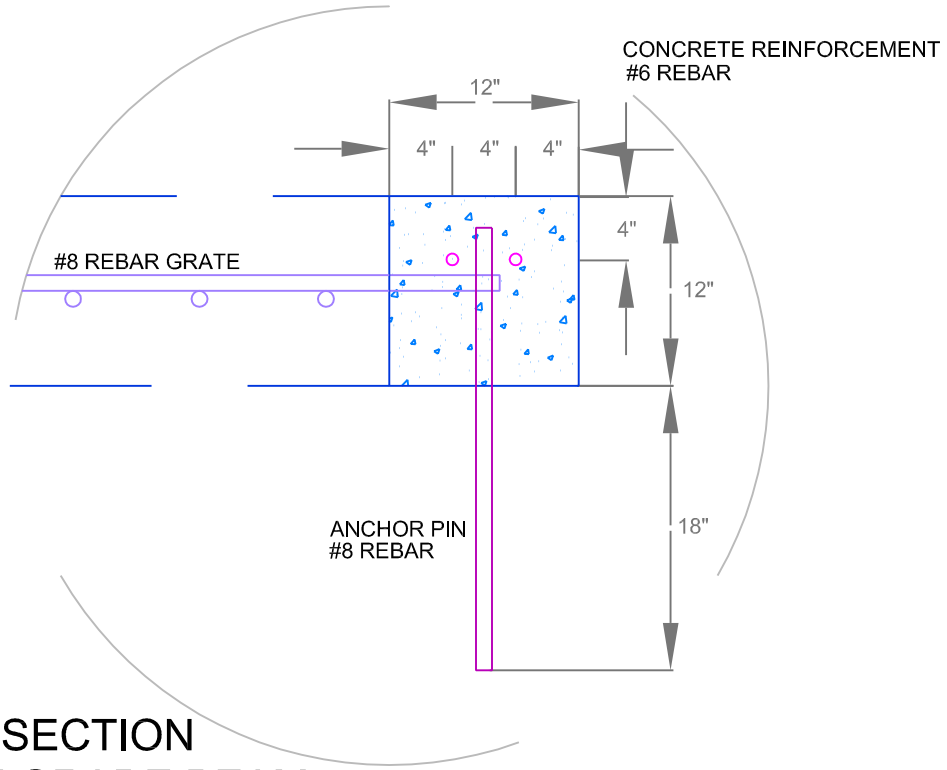

CROSS-SECTION
12" x 12" GRADE BEAM

REBAR SHAFT GRATE GRADE BEAM DETAILS

Scale: as noted

Design: LAA Drafting: JCR

Refer to Spec Section 0253

Sheet E16 of E18

MINE RECLAMATION PROJECT

UTAH NATURAL RESOURCES
Oil, Gas and Mining
Abandoned Mine Reclamation Program

Utah Oil Gas and Mining

TYPICAL SECTION

TYPICAL PLAN

UTAH NATURAL RESOURCES
Oil, Gas and Mining
Abandoned Mine Reclamation Program

Utah Oil Gas and Mining

MINE RECLAMATION PROJECT

REBAR SHAFT GRATE (PINNED)

Scale: as noted

Design: LAA Drafting: JCR

Refer to Spec Section 0253

Sheet E17 of E18

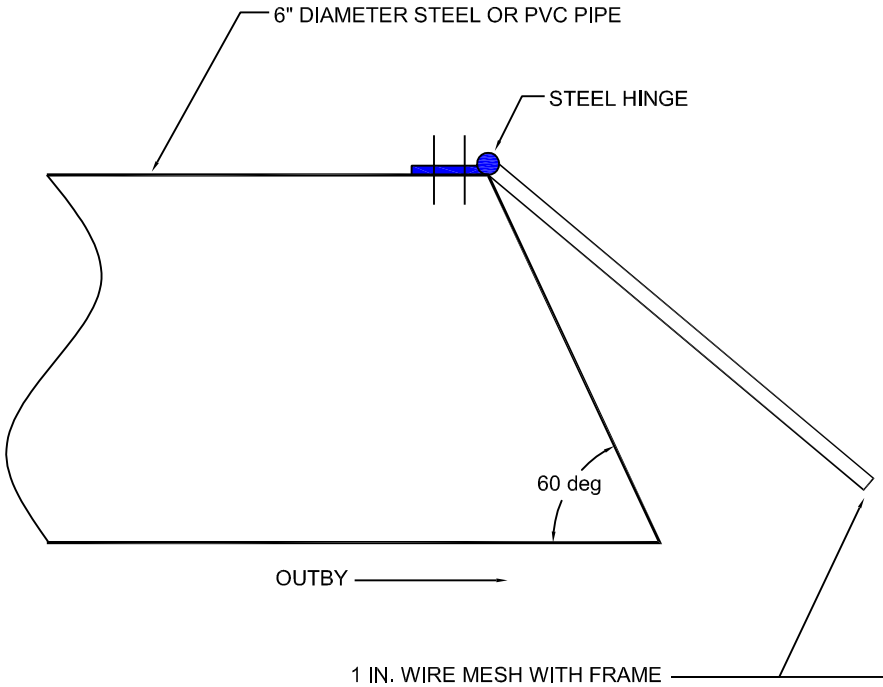

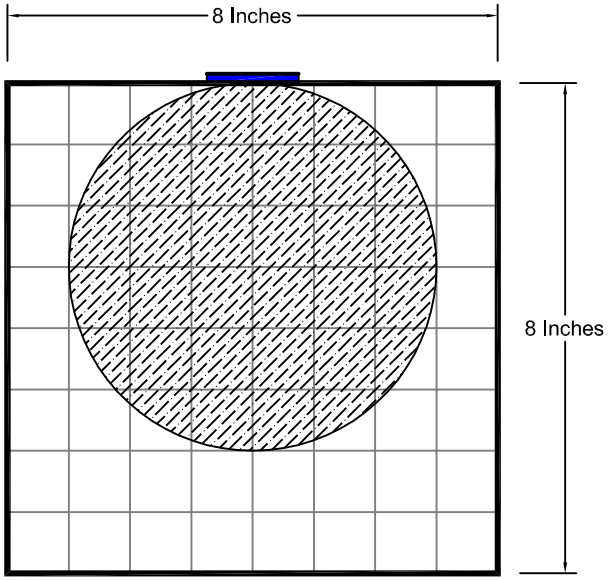

NOTE: STEEL OR PVC PIPE TO EXTENT 12 INCHES
INBY AND OUTBY WALL OR FILL MATERIAL

Utah Oil Gas and Mining **UTAH NATURAL RESOURCES** **Oil, Gas and Mining** Abandoned Mine Reclamation Program	**MINE RECLAMATION PROJECT**	**ONE-WAY TRAP DOOR CLOSURE DETAILS**	
		Scale: as noted	Design: LAA Drafting: DR
		Refer to Spec Section 0253	Sheet E18 of E18