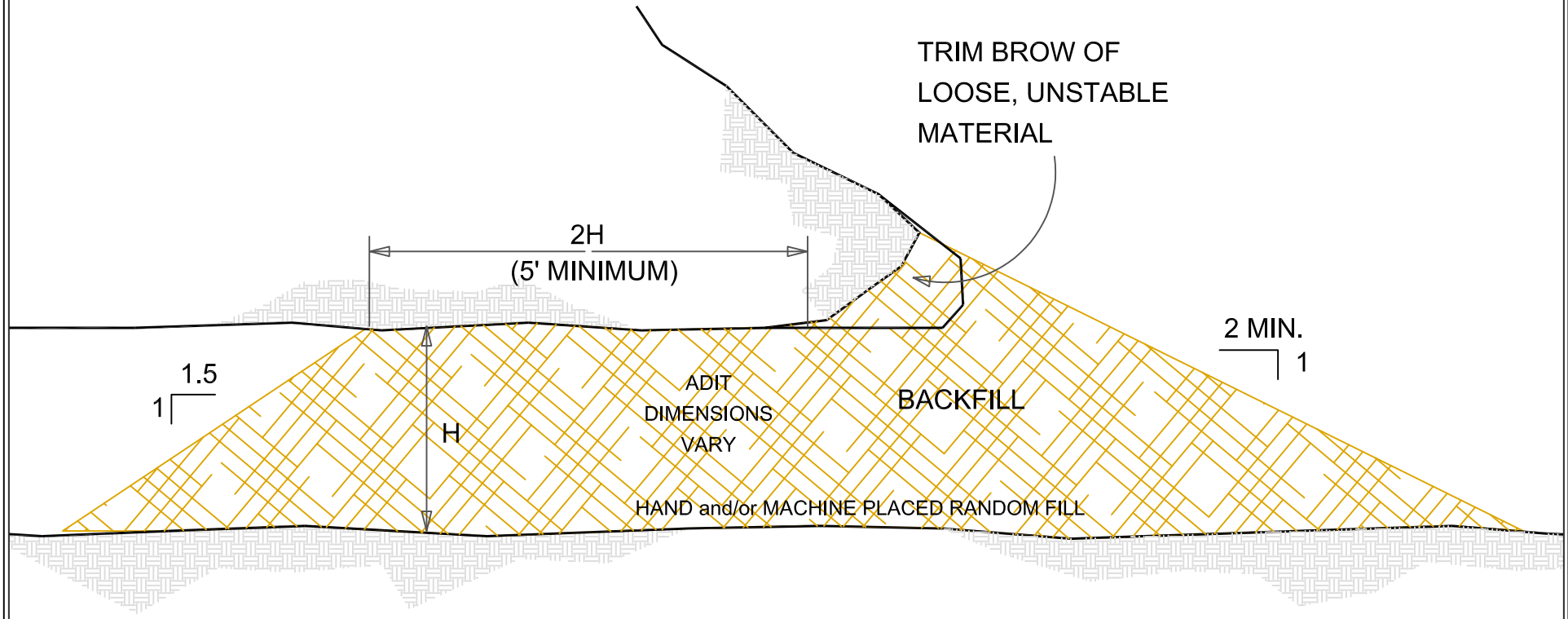

Utah Oil Gas and Mining **UTAH** **NATURAL RESOURCES** **Oil, Gas and Mining** Abandoned Mine Reclamation Program	**MINE RECLAMATION PROJECT**	**ADIT BACKFILL CLOSURE**	
		Scale: as noted	Design: LAA Drafting: JCR
		Refer to Spec Section 0200's	Sheet E1 of E19

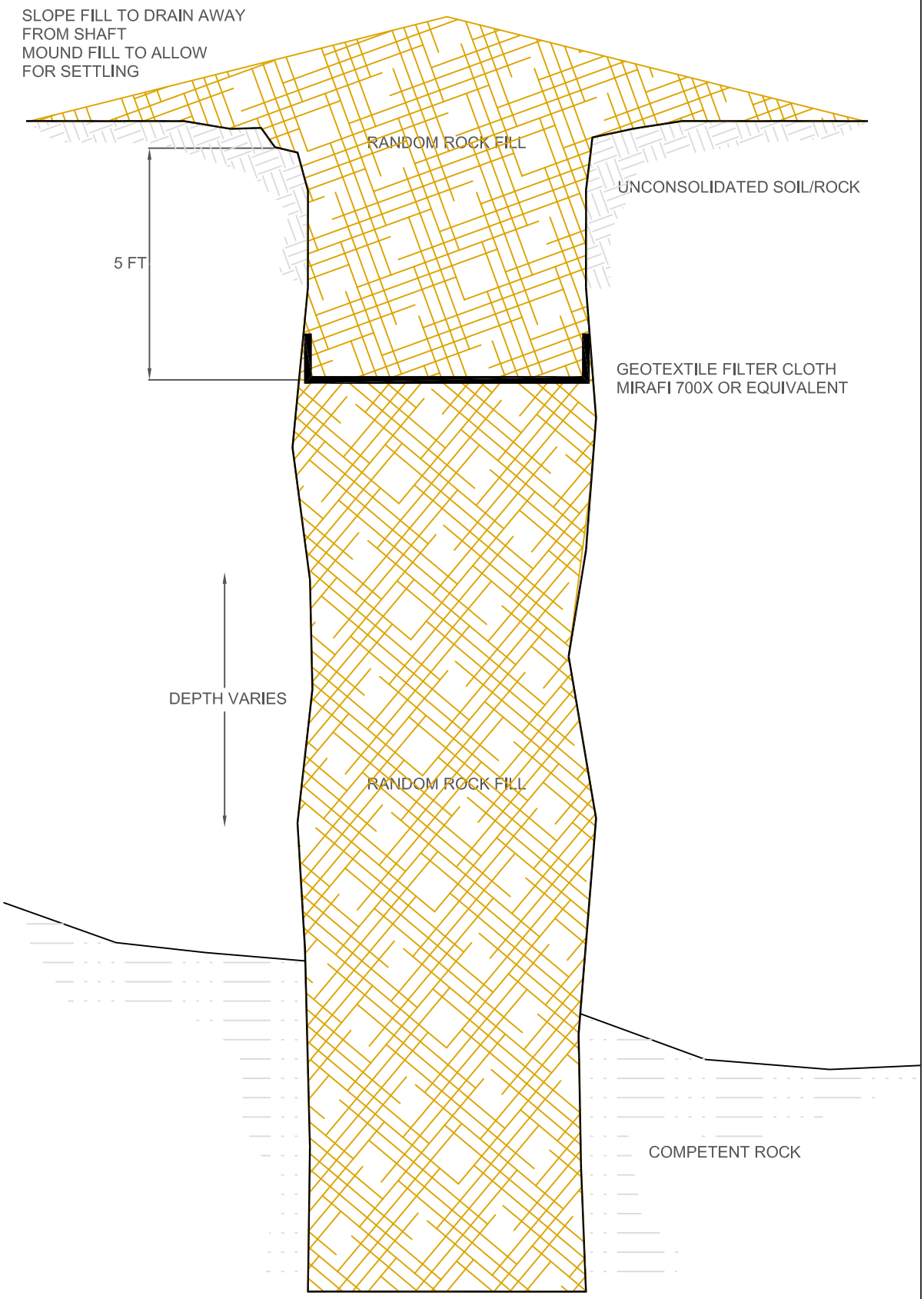

SHAFT BACKFILL CLOSURE

Scale: as noted

Refer to Spec Section 0200's

Design: LAA Drafting: JCR

Sheet E2 of E19

MINE RECLAMATION PROJECT

UTAH
NATURAL RESOURCES
Oil, Gas and Mining
Abandoned Mine Reclamation Program

Utah Oil Gas and Mining

TYPICAL ELEVATION

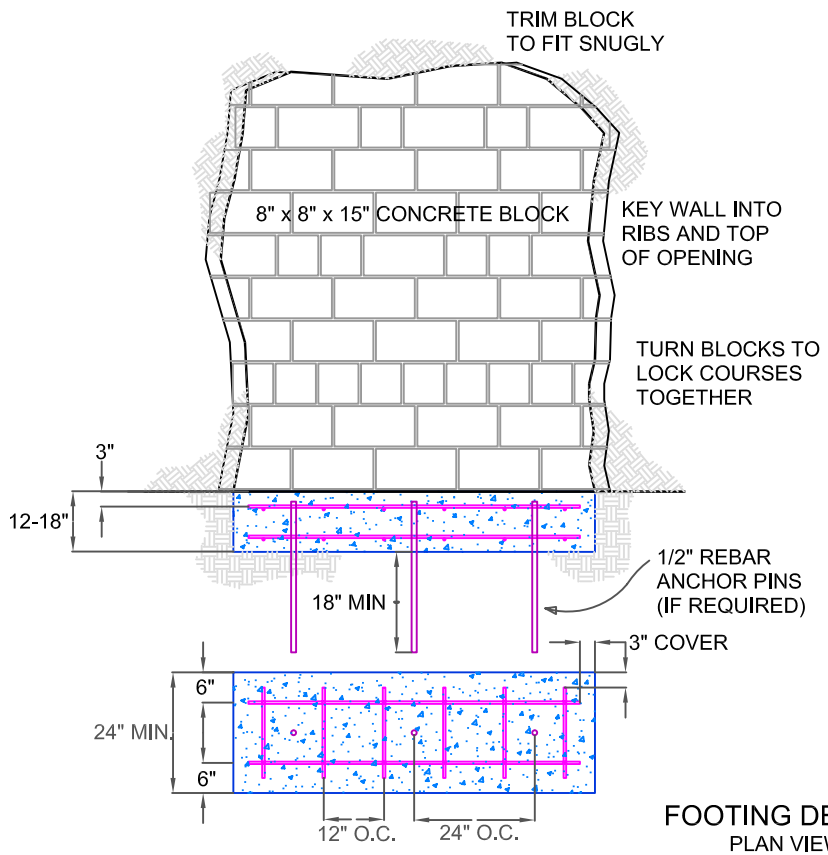

FOOTING DETAIL
PLAN VIEW

TYPICAL SECTION

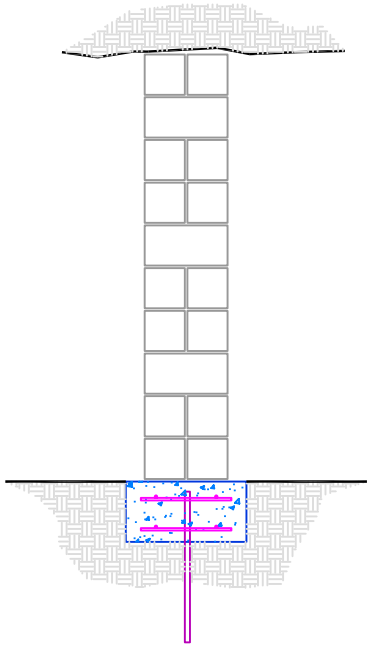

CONCRETE FOOTER AND
REBAR ANCHOR PINS MAY
BE OMITTED WITH OWNER'S
APPROVAL WHERE THE
SILL IS COMPETENT ROCK

PILASTER DETAIL

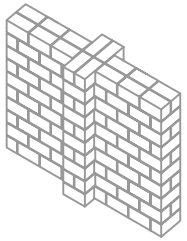

Utah Oil Gas and Mining **UTAH** **NATURAL RESOURCES** **Oil, Gas and Mining** Abandoned Mine Reclamation Program	**MINE RECLAMATION PROJECT**	**BLOCK WALL CLOSURE**
		Scale: as noted / Design: LAA Drafting: JCR
		Refer to Spec Section 0200's / Sheet E3 of E19

TYPICAL ELEVATION

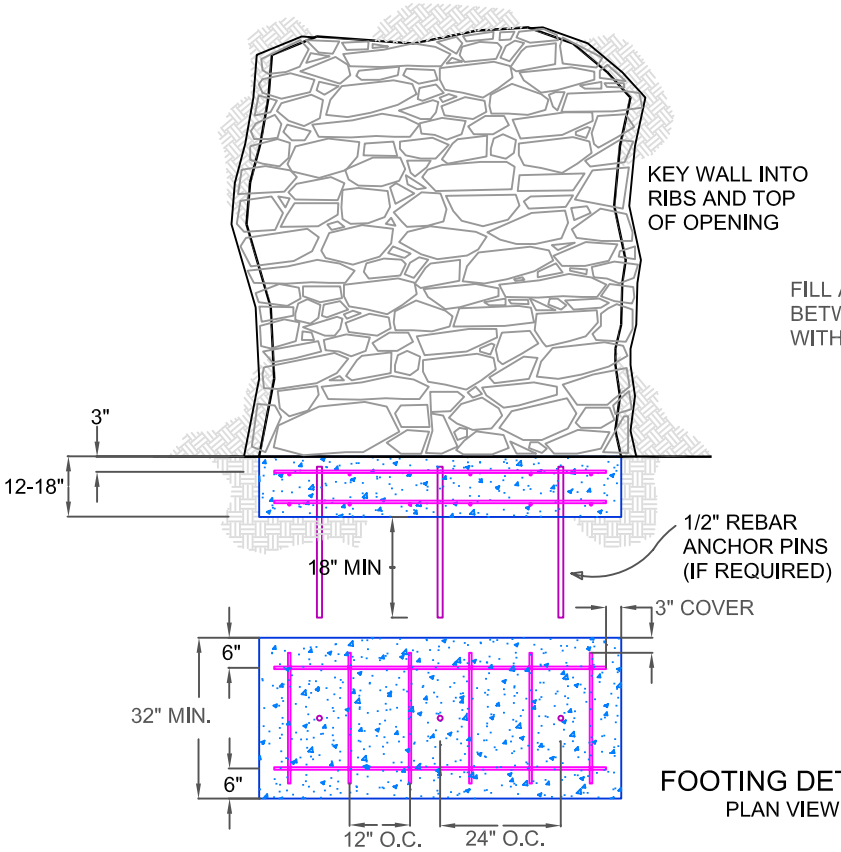

FOOTING DETAIL
PLAN VIEW

TYPICAL SECTION

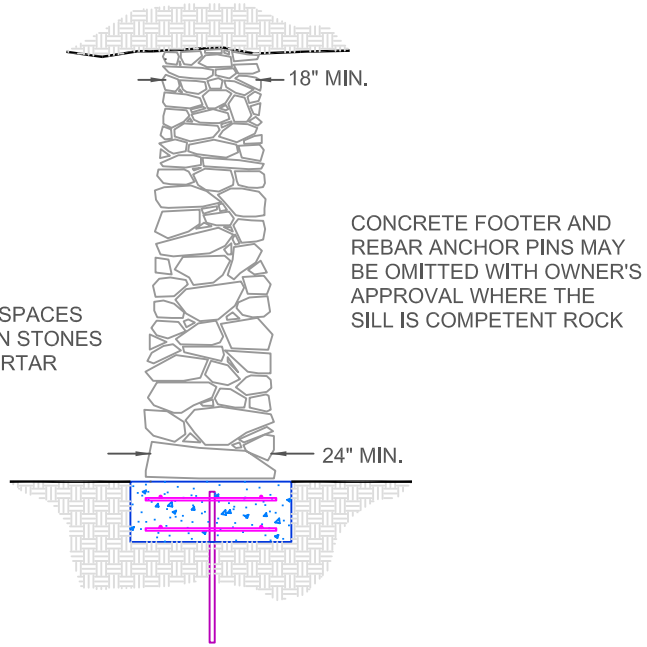

Utah Oil Gas and Mining **UTAH** **NATURAL RESOURCES** **Oil, Gas and Mining** Abandoned Mine Reclamation Program	**MINE RECLAMATION PROJECT**	**NATIVE STONE WALL CLOSURE**	
		Scale: as noted	Design: LAA Drafting: JCR
		Refer to Spec Section 0200's	Sheet E4 of E19

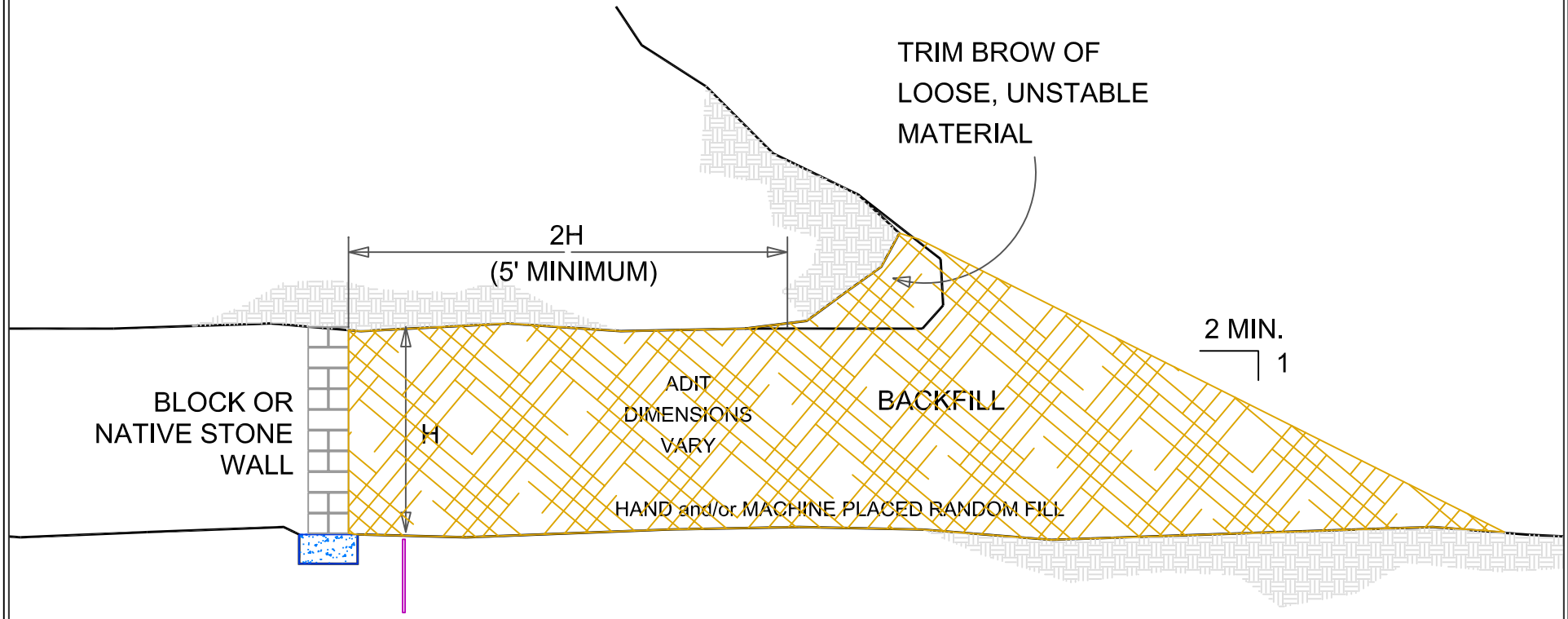

Utah Oil Gas and Mining **UTAH** **NATURAL RESOURCES** **Oil, Gas and Mining** Abandoned Mine Reclamation Program	**MINE RECLAMATION PROJECT**	**WALL AND BACKFILL CLOSURE**	
		Scale: as noted	Design: LAA Drafting: JCR
		Refer to Spec Section 0200's	Sheet E5 of E19

TYPICAL ELEVATION

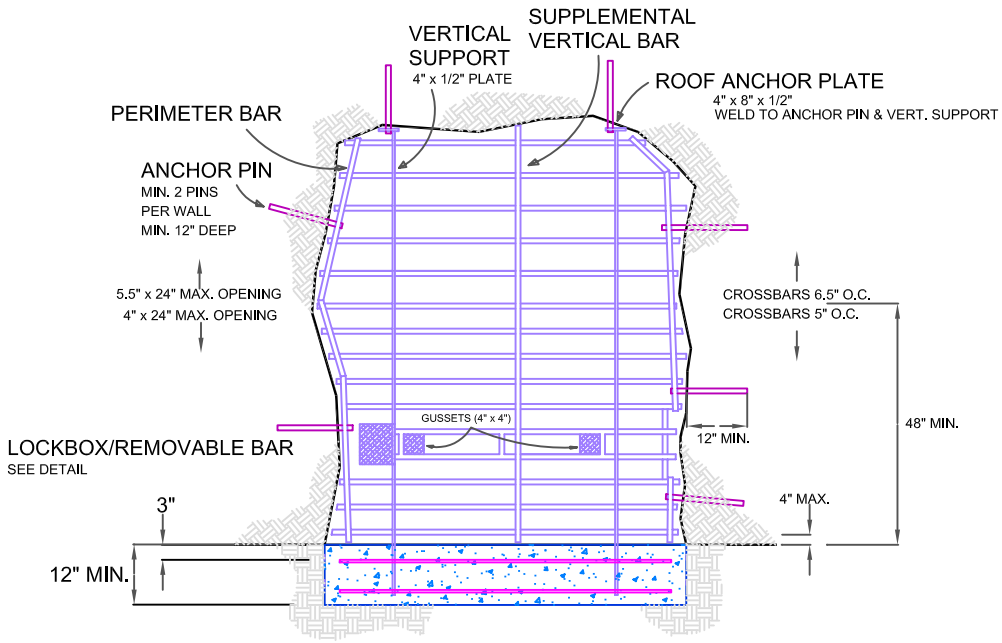

TYPICAL SECTION

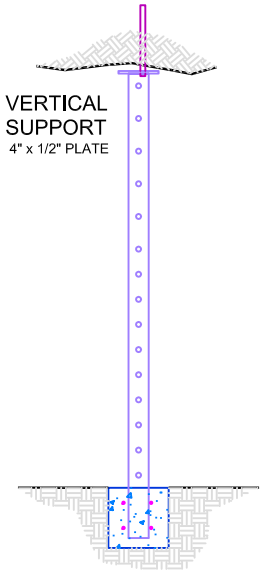

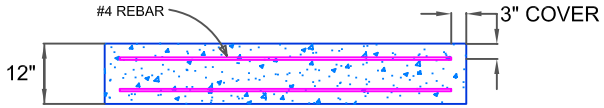

BARS FILLET WELD ALL INTERSECTIONS

FOOTING DETAIL
PLAN VIEW

NOTE: ALL GATE STEEL TO BE 12-14% MANGANESE STEEL (MANGANAL OR EQUIV.)

Utah Oil Gas and Mining **UTAH NATURAL RESOURCES** **Oil, Gas and Mining** Abandoned Mine Reclamation Program	**MINE RECLAMATION PROJECT**	**BAT GATE CLOSURE**	
		Scale: as noted	Design: LAA Drafting: JCR
		Refer to Spec Section 0200's	Sheet E6 of E19

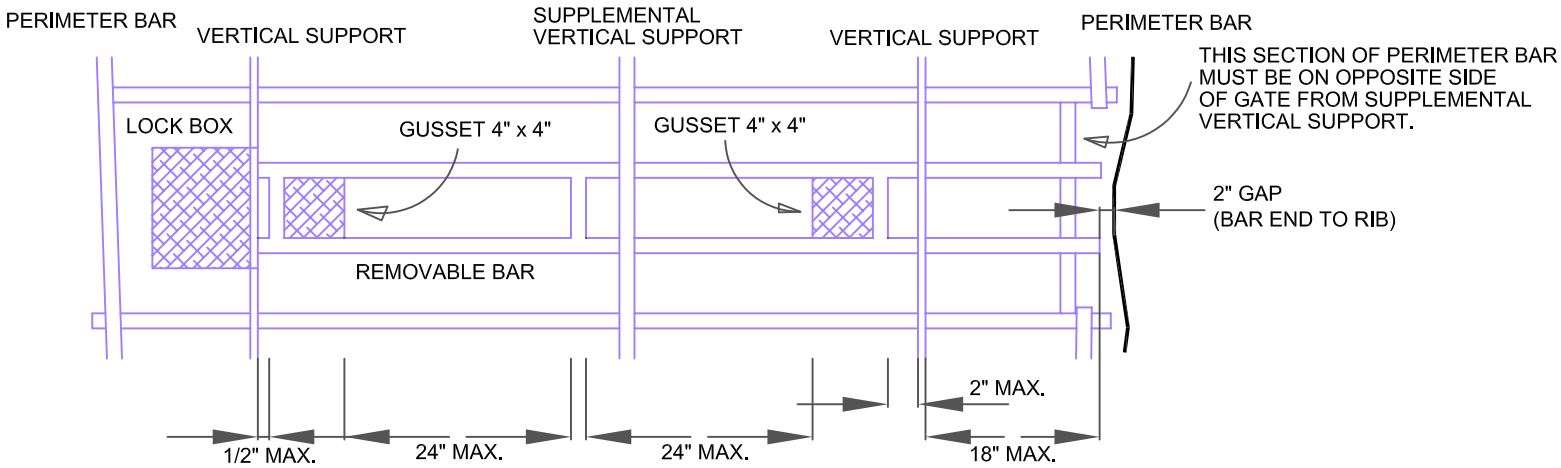

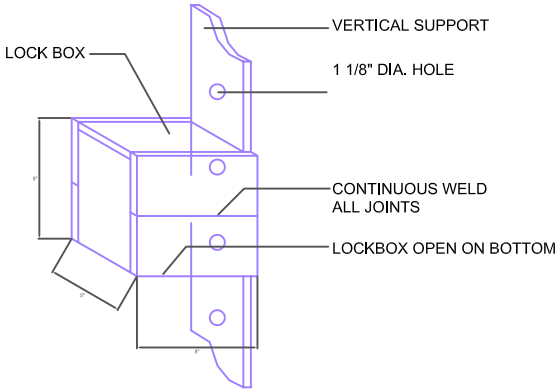

LOCK BOX
OBLIQUE VIEW

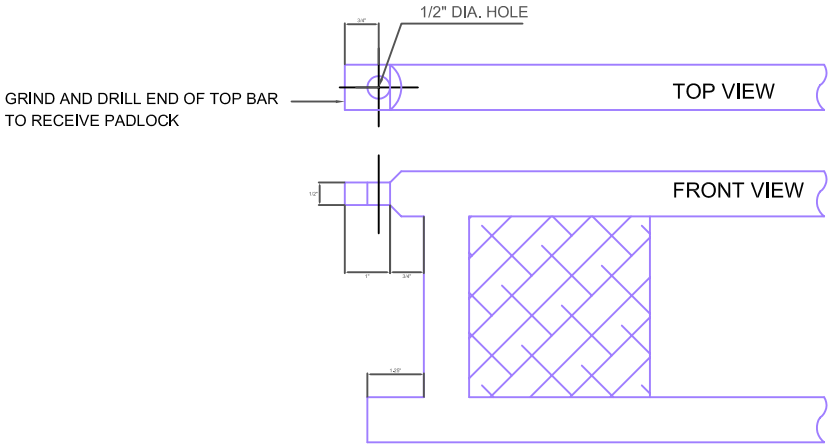

REMOVABLE BAR DETAIL

Utah Oil Gas and Mining **UTAH NATURAL RESOURCES** **Oil, Gas and Mining** Abandoned Mine Reclamation Program	**MINE RECLAMATION PROJECT**	**BAT GATE CLOSURE DETAILS**	
		Scale: as noted	Design: LAA Drafting: JCR
		Refer to Spec Section 0200's	Sheet E7 of E19

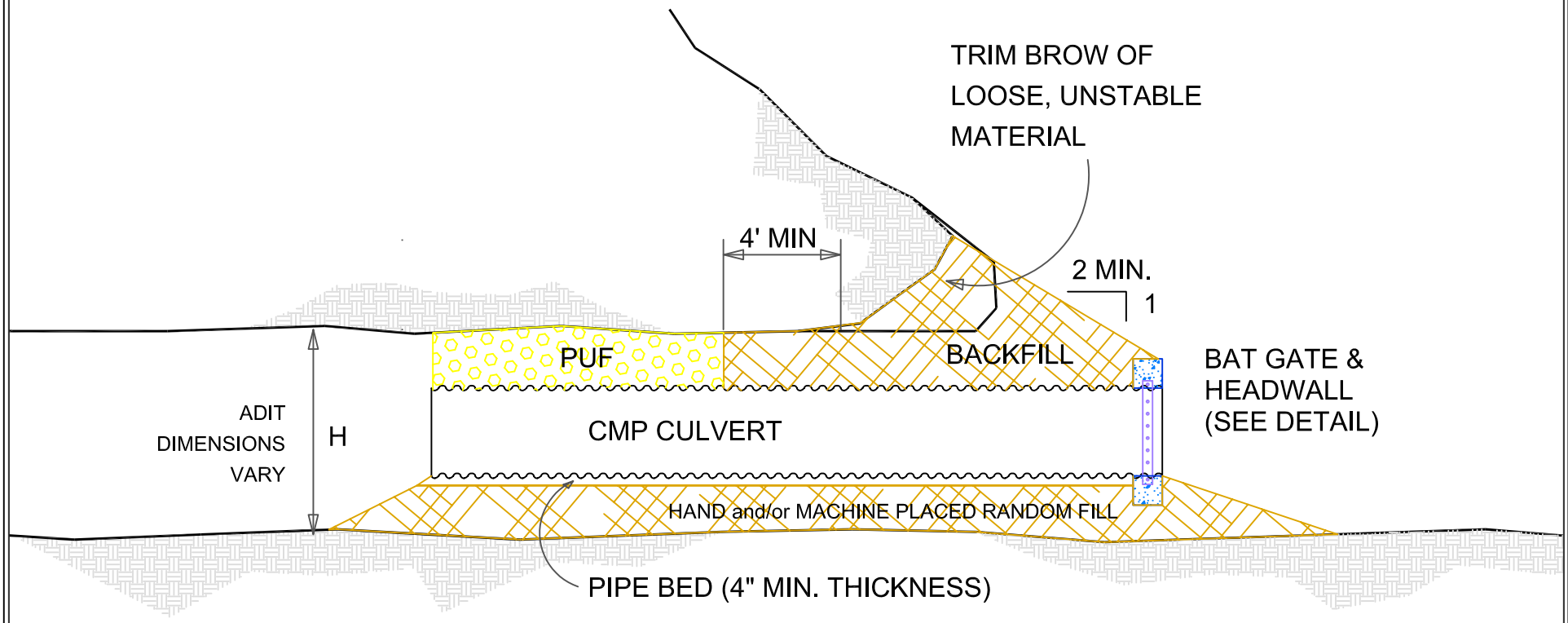

Utah Oil Gas and Mining **UTAH** **NATURAL RESOURCES** **Oil, Gas and Mining** Abandoned Mine Reclamation Program	**MINE RECLAMATION PROJECT**	**CMP BAT GATE CLOSURE**	
		Scale: as noted	Design: LAA Drafting: JCR
		Refer to Spec Section 0200's	Sheet E10 of E19

TYPICAL ELEVATION

TYPICAL SECTION

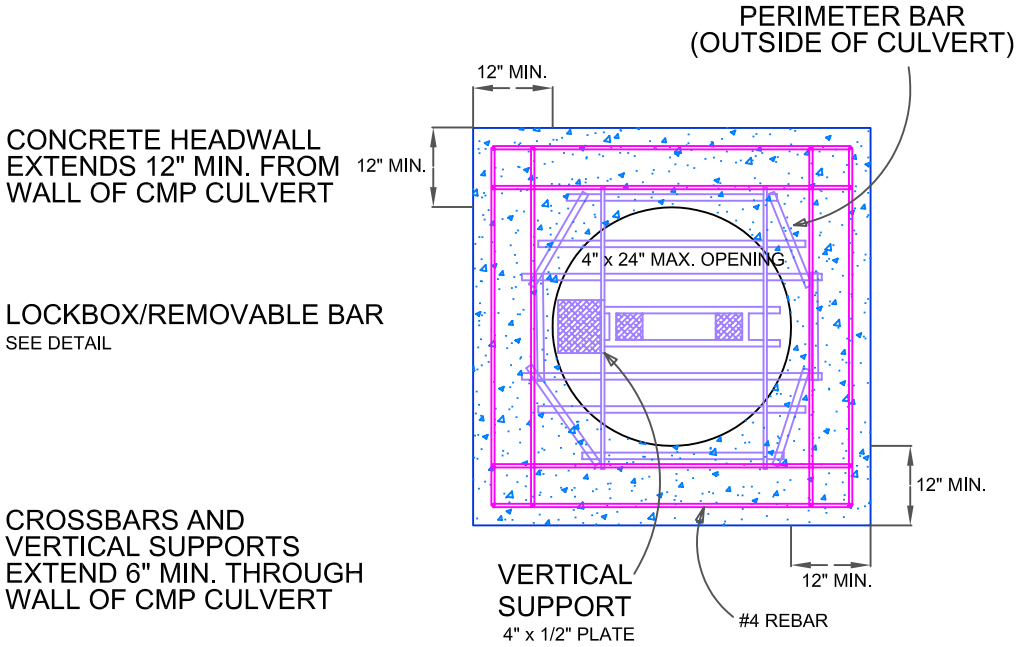

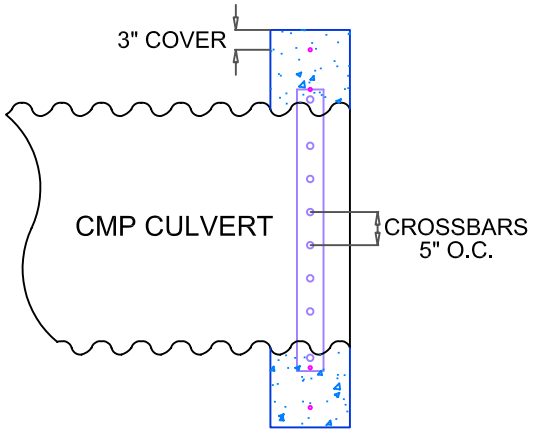

CONCRETE REINFORCEMENT:
#4 REBAR, 12" O.C., ONE MAT

NOTE: ALL GATE STEEL TO BE 12-14% MANGANESE STEEL (MANGANAL OR EQUIV.)

Utah Oil Gas and Mining **UTAH NATURAL RESOURCES** **Oil, Gas and Mining** Abandoned Mine Reclamation Program	**MINE RECLAMATION PROJECT**	**CMP BAT GATE CLOSURE DETAILS**	
		Scale: as noted	Design: LAA Drafting: JCR
		Refer to Spec Section 0200's	Sheet E11 of E19

TYPICAL PLAN

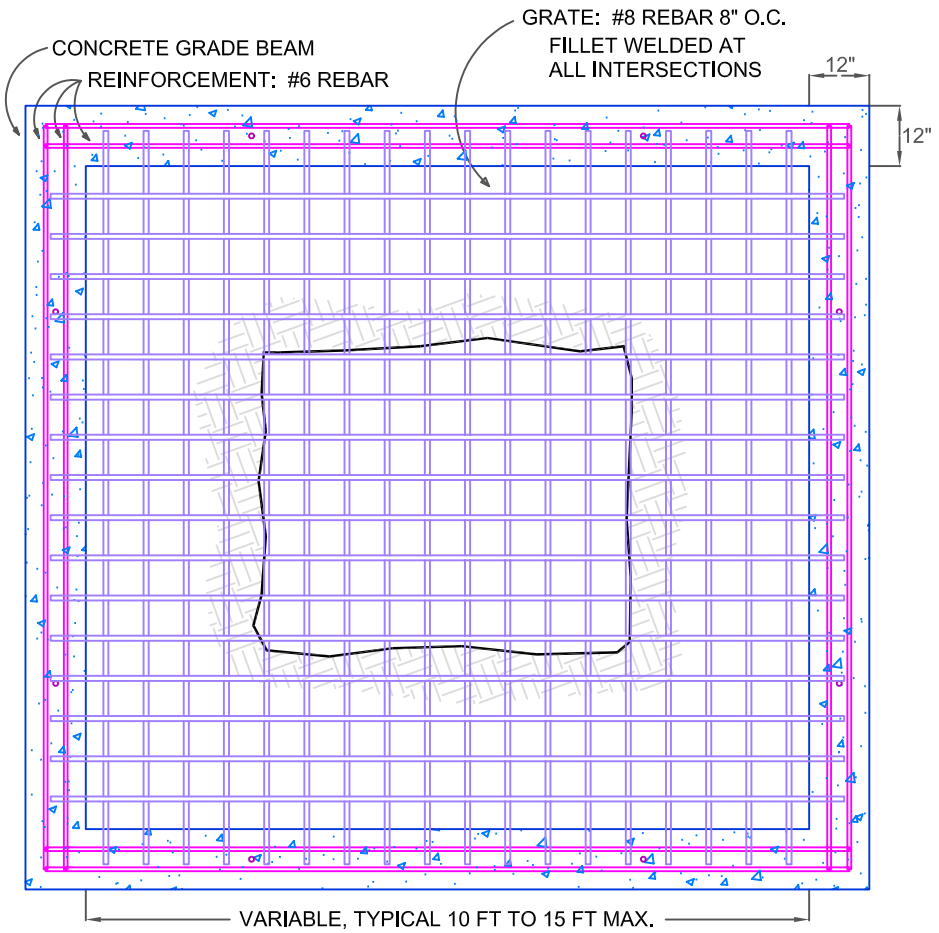

TYPICAL SECTION

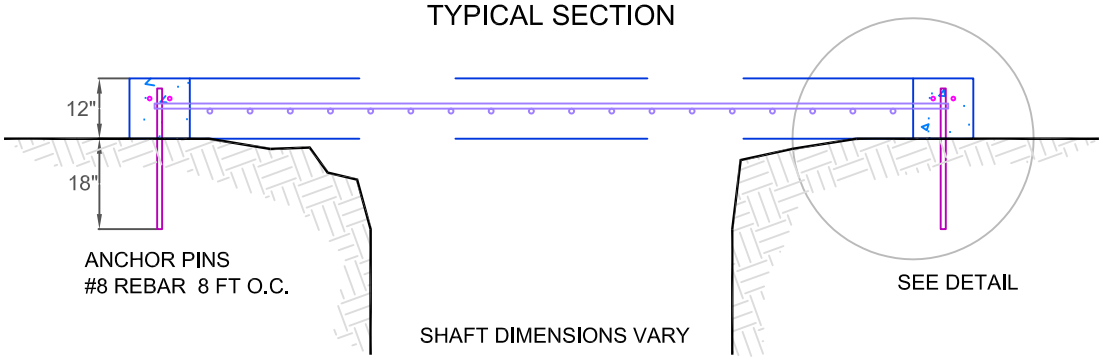

REBAR SHAFT GRATE CLOSURE

Design: LAA Drafting: JCR

Sheet E14 of E19

Scale: as noted

Refer to Spec Section 0200's

MINE RECLAMATION PROJECT

UTAH NATURAL RESOURCES
Oil, Gas and Mining
Abandoned Mine Reclamation Program

Utah Oil Gas and Mining

TYPICAL PLAN

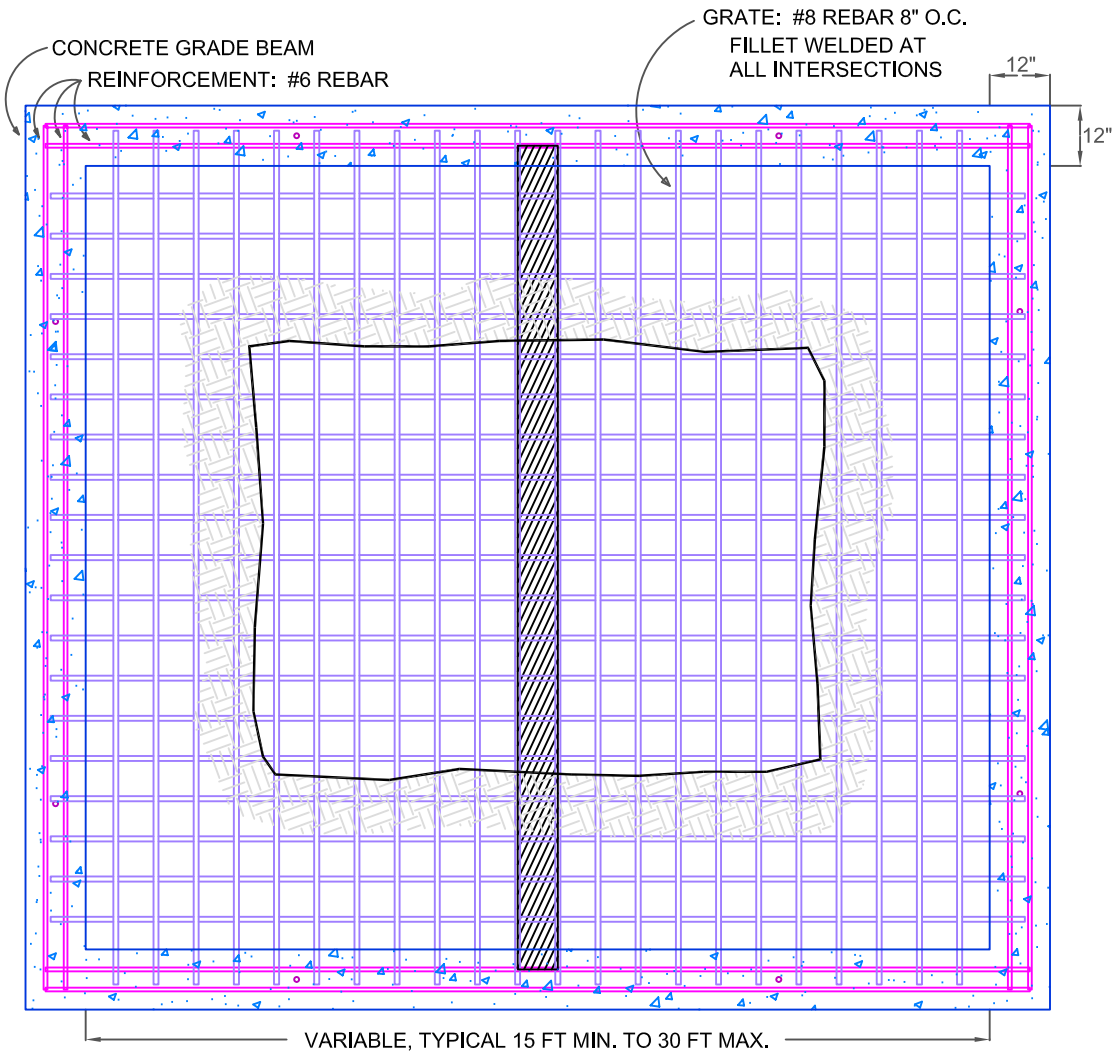

TYPICAL SECTION

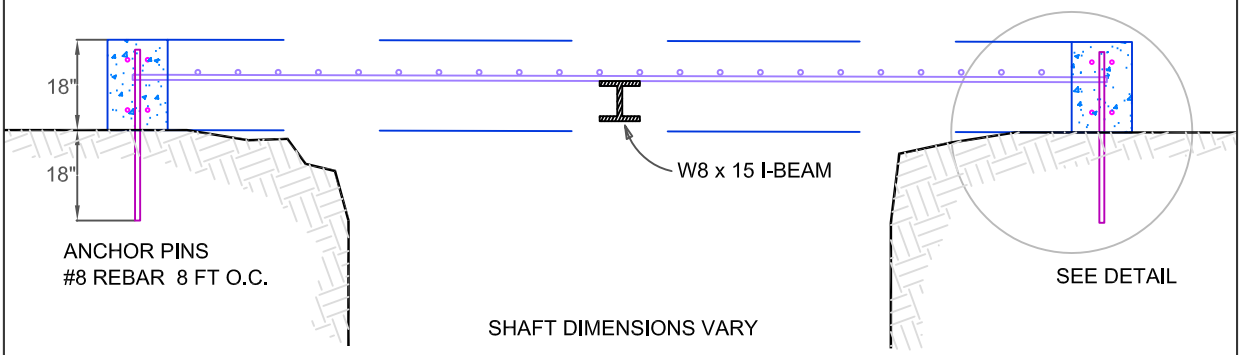

REBAR SHAFT GRATE (WITH I-BEAM)

Design: LAA Drafting: JCR

Sheet E15 of E19

Scale: as noted

Refer to Spec Section 0200's

MINE RECLAMATION PROJECT

UTAH NATURAL RESOURCES
Oil, Gas and Mining
Abandoned Mine Reclamation Program

Utah Oil Gas and Mining

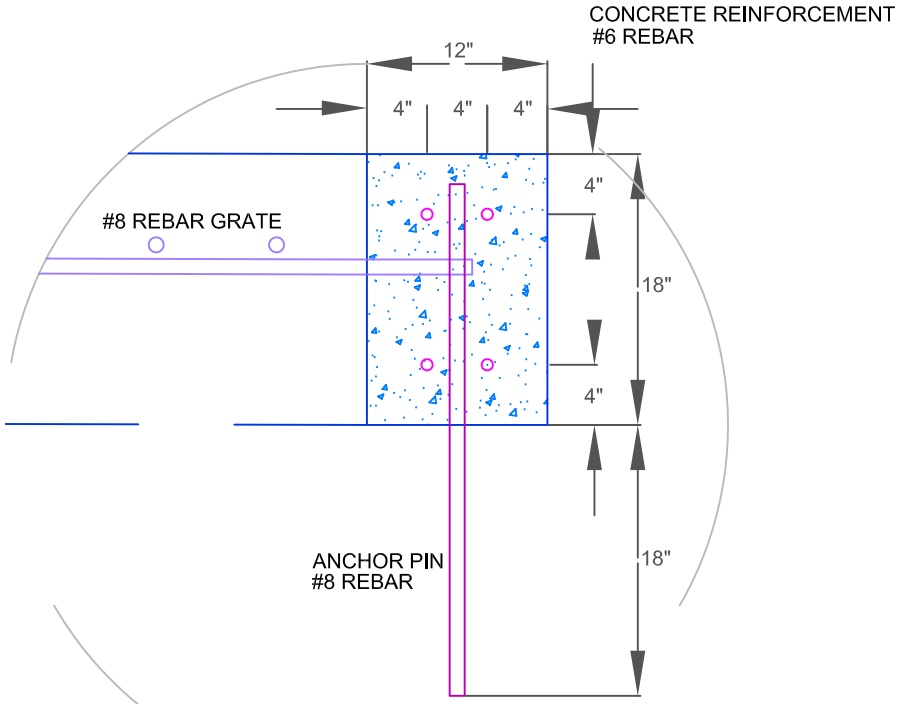

CROSS-SECTION
12" x 18" GRADE BEAM

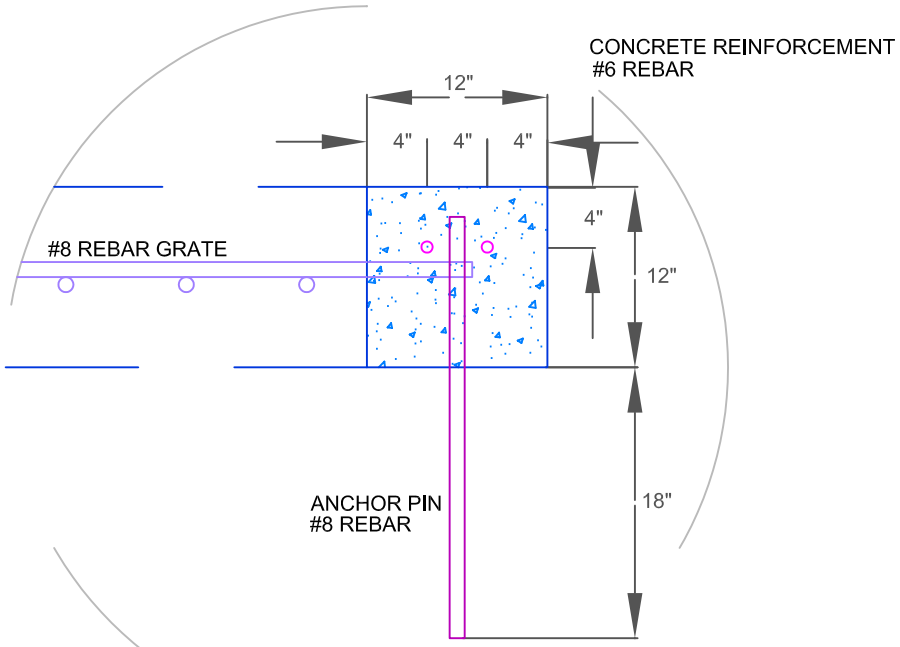

CROSS-SECTION
12" x 12" GRADE BEAM

REBAR SHAFT GRATE GRADE BEAM DETAILS

Design: LAA Drafting: JCR

Sheet E16 of E19

Scale: as noted

Refer to Spec Section 0200's

MINE RECLAMATION PROJECT

UTAH NATURAL RESOURCES
Oil, Gas and Mining
Abandoned Mine Reclamation Program

Utah Oil Gas and Mining

TYPICAL PLAN

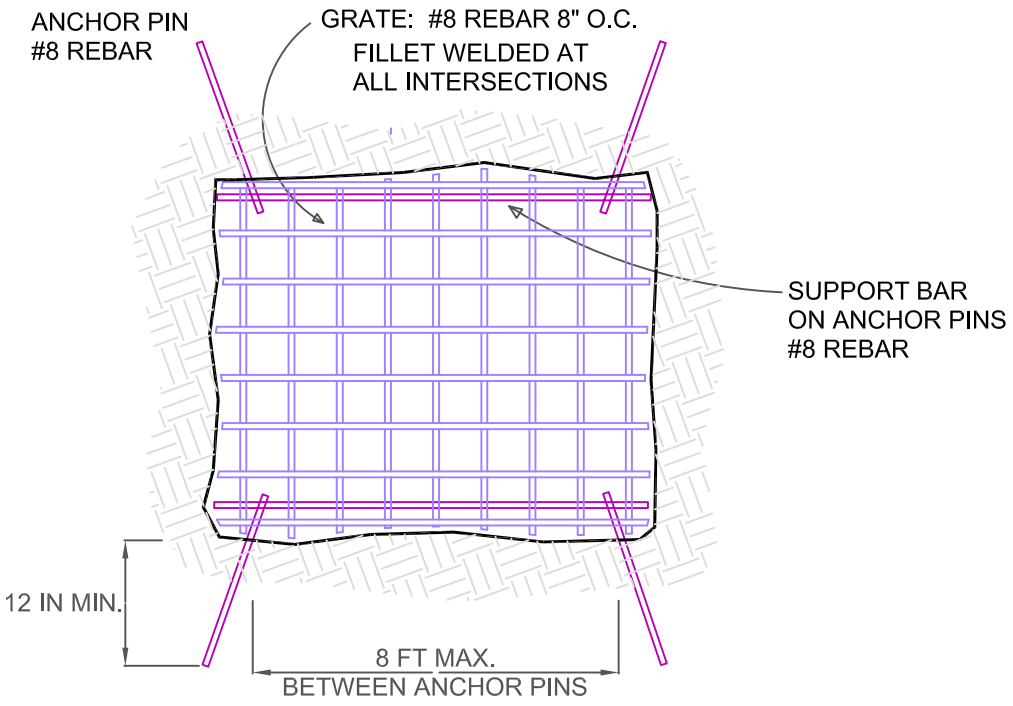

TYPICAL SECTION

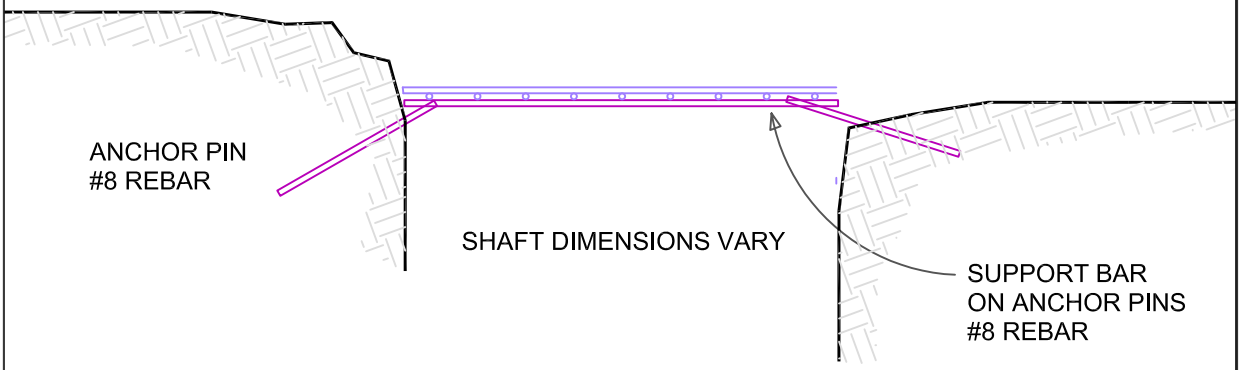

REBAR SHAFT GRATE (PINNED)

Design: LAA Drafting: JCR

Scale: as noted

Sheet E17 of E19

Refer to Spec Section 0200's

MINE RECLAMATION PROJECT

UTAH NATURAL RESOURCES
Oil, Gas and Mining
Abandoned Mine Reclamation Program

Utah Oil Gas and Mining