3.2.7 Power Supply and Transmission Lines

The primary electrical service for the C.V. Spur is from a 44.5 kV transmission line owned and operated by Utah Power and Light Company. This HVTL skirts the north and west edge of the property and lies within the permit boundary on a utility easement (see Section 4.3.1).

A 12.5 kV overhead line extends from the northeast corner of the property to the substation adjacent to the coal processing plant (see Plate 3-2).

Various lower voltage underground distribution lines extend from the substation to the truck dumps, stacking tubes, etc.

3.3 Operations Plan

3.3.1 Plant Processing System

Raw coal will be fed into the plant wash box via the existing feed conveyor. Refuse will be separated from the coal and placed in the refuse bin for loadout. The clean coal will continue through the plant systems for sizing and drying, with the final, clean product being stockpiled on the north side of the plant. Minus 28 mesh material from the washing cycle will be pumped to the settling ponds where the solids are settled out and the process water is clarified and returned to the plant wash cycle.

3.3.2 Washed Coal System

The washing cycle will operate in the same manner as the previous plant operation, except there will be no static thickener for removal of fines and water clarification. Instead, the -28 mesh material will be pumped from the plant into a series of settling ponds to be constructed northeast of the main office building. The fines will be settled in these ponds, and the clarified water will return to the plant in a separate line for reuse in the washing cycle. A dual set of ponds will be constructed as shown on Plate 3-2. When one set of ponds become full of settled fines, the valves can be switched to the other set of ponds, allowing the previous set to be cleaned.

It should be noted that the ponds will be constructed in such a manner as to prevent inflow from site runoff, and will not be part of the sedimentation and drainage control system for the site. The ponds will be incised; however, they will also be surrounded by a raised berm to prevent runoff inflow, as shown on Figure 3-13. The settling ponds will provide the same function as the previously operated static thickener, and will still allow for the plant wash cycle to operate as a closed-loop circuit with no discharge except in the event of an emergency. If such an emergency should occur, any discharge from the plant or settling ponds would be contained by the sedimentation ponds on site.

The material removed from the settling ponds during cleaning will be treated as a coal product and blended in with coal shipments, rather than being disposed of as refuse.

3.3.3 Non-Washed Coal System

Coal is received from various mine operations in the area. The coal is brought in by double trailer trucks, and is stored at designated locations on the site. The majority of the coal is dumped through one of five truck dumps on site, where it is conveyed to stackers or stacking tubes prior to shipping.

Figure 3-12
Processing Flow Chart

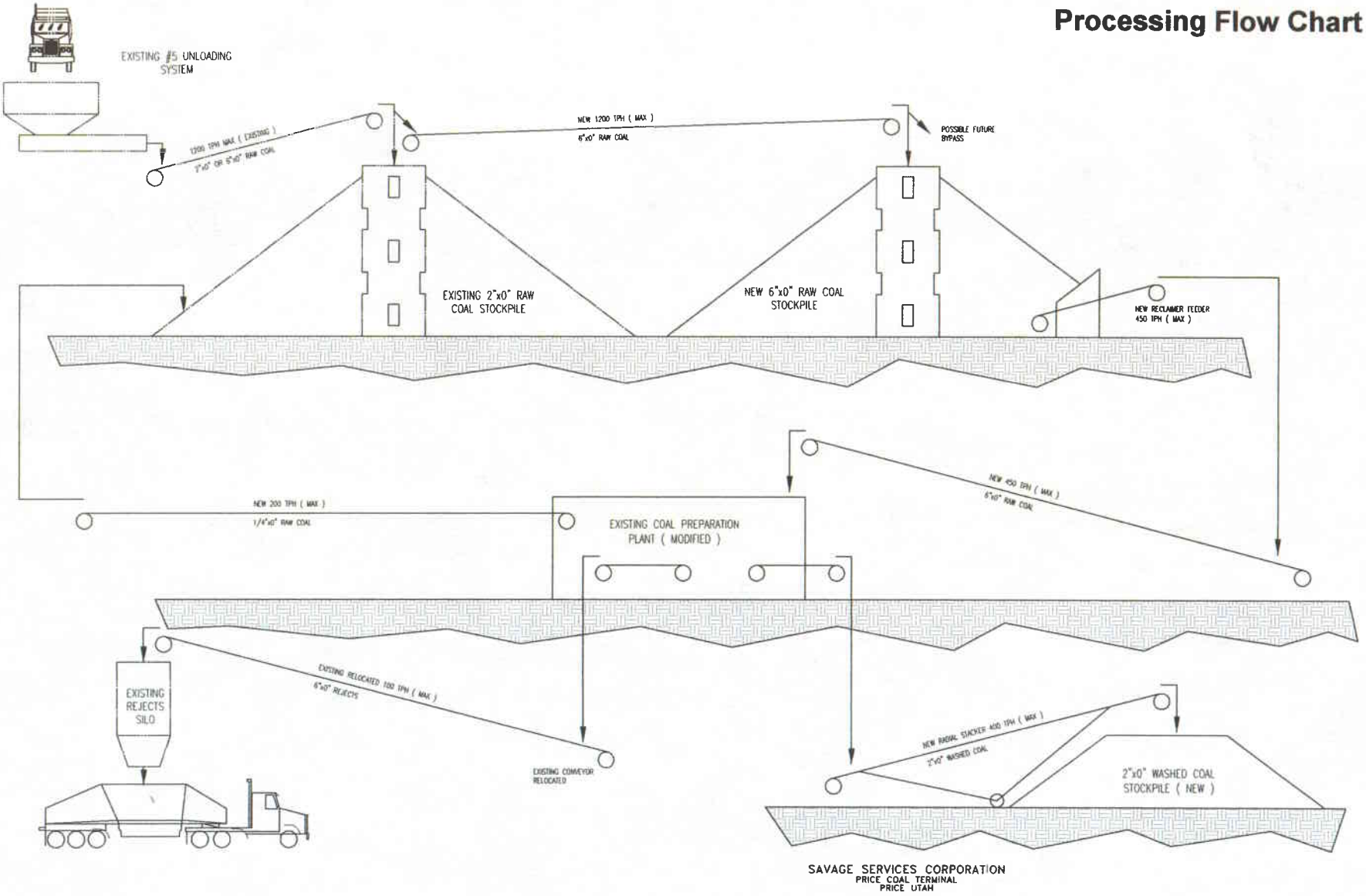

SAVAGE SERVICES CORPORATION
PRICE COAL TERMINAL
PRICE UTAH

FIGURE 3-13
SAVAGE COAL TERMINAL SETTLING POND

(NOT TO SCALE)

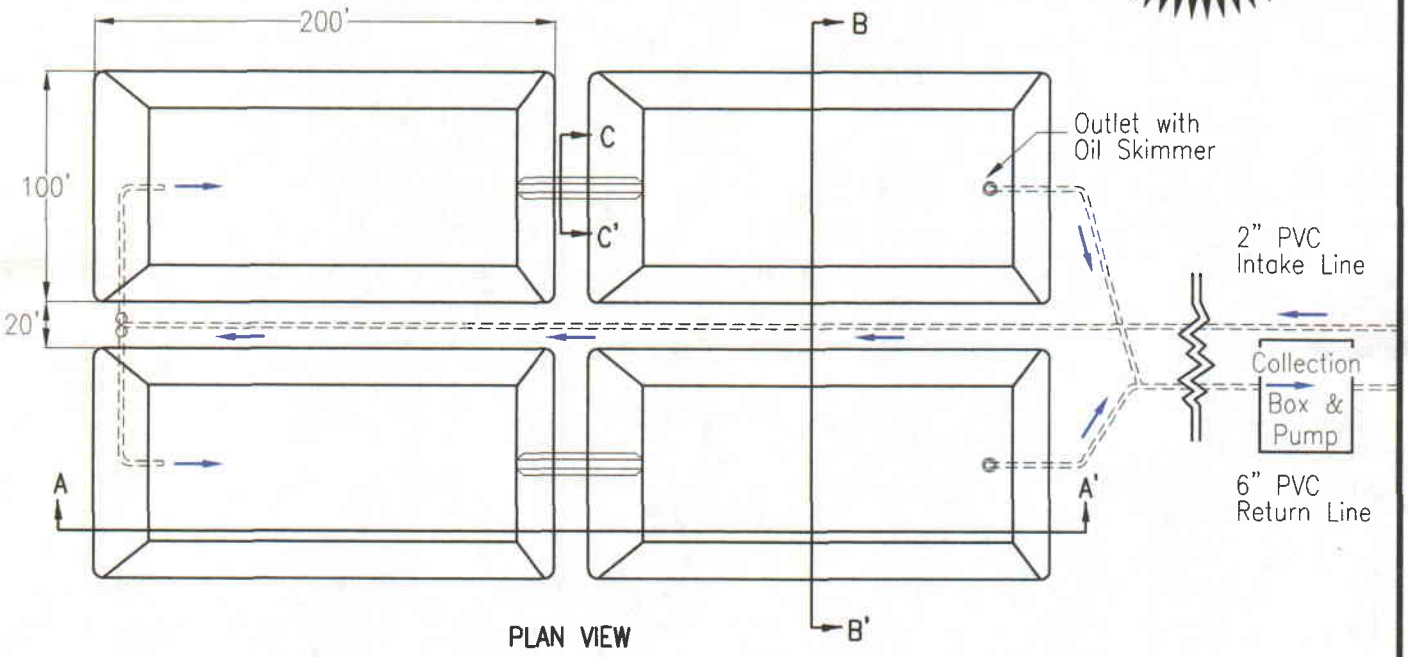

PLAN VIEW

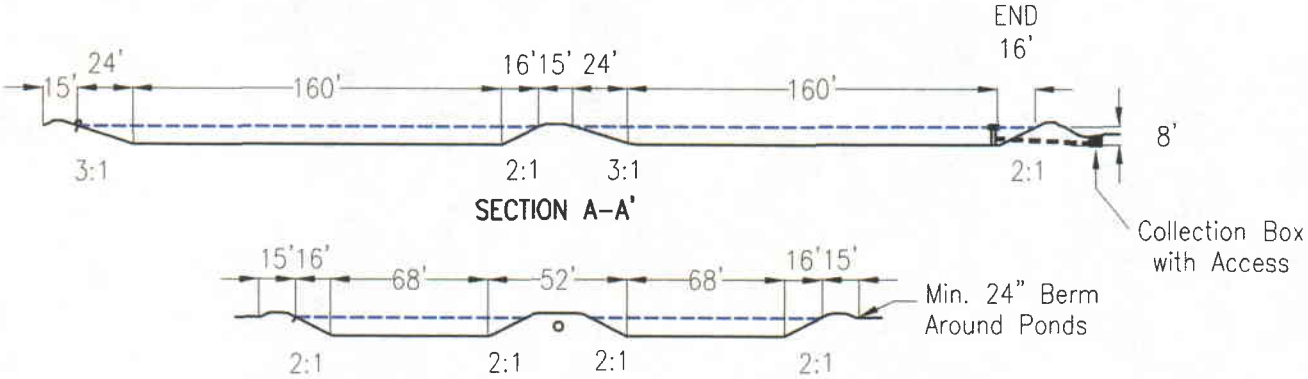

SECTION A-A'

SECTION B-B'

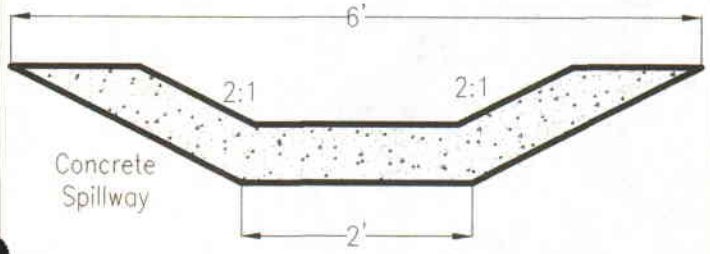

SECTION C-C'

INTER-CELL SPILLWAY

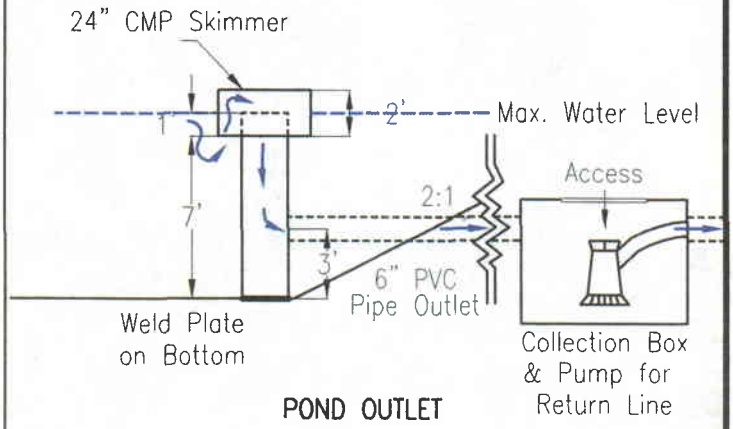

POND OUTLET

3.4.3 Preservation of Soil Resources and Projected Impacts of Mining On Soil Resources (continued)

The current plans are to disturb an additional 6.61 acres for settling ponds. Areas that will be disturbed are presented on Plate 3-2. Prior to disturbance. Suitable topsoil and subsoil will be stripped and stored in their respective piles until needed for permanent reclamation.

Due to the fact that topsoil was not salvaged for areas disturbed prior to the reclamation laws adopted in 1978, it becomes necessary to evaluate a substitute material for final reclamation. The chemical and physical analysis from the disturbed land fill indicate the material has a poor rating as topsoil material (see Section 8, Soil Resources). However, since no other topsoil materials exist in the immediate vicinity of disturbance. Beaver Creek Coal Company proposed the use of disturbed land fill as a substitute for topsoil in final reclamation (see Section 8.6 for justification).

3.4.3.1 Control Measures to Mitigate Impact to Soil Resources

Plans for future disturbance are limited to the proposed 6.61 acres for settling ponds. Plate 3-2 shows current projections of disturbance at C.V. Spur. Soil resources will be stripped immediately prior to the need for additional refuse disposal area; thus, eliminating unnecessary soil erosion. Disturbed areas will be protected to prevent excessive erosion of soils on disturbed sites. These areas include pond embankments, diversions, soil piles, and selected areas on longer used for everyday operations.

3.4.4 Protection of Vegetative Resources

A reclamation plan has been designed which will establish on all areas disturbed by surface operations and facilities a diverse, effective and permanent vegetative cover which will be capable for supporting the uses which the land was capable for supporting before mining. This plan is fully described in Section 3.5.

Areas to be planted will be "roughened" by tilling (or other means) to help hold the seeds in place. The seed mixtures, found on Tables 3-1 and 3-2 of Section 3.5, will be spread either by drill seeder or hydroseeder. Mulch will then be applied at a rate of 2,000 pounds per acre either by machine crimping with a disc or stabilization onto the surface with a tackifyer. The revegetated are will be monitored and if success appears unlikely, alterations will be made until revegetation is successful.

All disturbed lands, will be seeded or planted to achieve a permanent vegetative cover of the same seasonal variety native to the area of disturbed land.

3.4.4.1 Mitigating Measures to be Employed to Reduce Impacts on Vegetation Resources

Vegetation resources will be disturbed as necessary for the operations. Surface disturbance will be conducted immediately prior to the need for additional area. Upon completion, all disturbed areas will be reclaimed to return vegetation to these areas as described in Section 3.5.

3.5.2 Soil Removal and Storage

The soil survey conducted in July, 1980 distinguished disturbed soils from undisturbed soil mapping units (see Plate 8-2, Soils Map). Areas mapped as Disturbed Land were areas where the soils, vegetation, or both were affected by operations. Disturbance of areas which now occupy roads and surface facility sites occurred prior to enactment of reclamation legislation so no topsoil was salvaged from these areas. However, soils underlying disturbance are considered to be in-place aside from the top several inches of coal fines, and compaction.

The undisturbed soil mapping units will have topsoil removed immediately prior to disturbance based on stripping depths that have been assigned to each soil type. The stripping depths were derived from soil physical and chemical analysis (see Section 8.5). Subsoil is that material which exist between the topsoil and the parent material.

Where chemical analysis substantiates, subsoil will be stripped down to the parent material.

The location of the topsoil pile that currently exists at Savage Coal Terminal is displayed on Plate 3-2. This stockpile was placed on level ground and revegetated with the temporary seed mixture to reduced wind and water erosion. As additional topsoil is placed on the stockpile, it is reclaimed contemporaneously with the first suitable growing season.

3.5.2 Soil Removal and Storage (continued)

The topsoil stockpile will likely be expanded to its maximum size in 2006, with the addition of soils from the settling pond area north of the office. The topsoil stripped from this area will be placed on the existing storage pile and left in a roughened condition. Organic debris existing on the surface of the newly stripped area will be left in the soil when stockpiled to maintain the organic content.

Once the newly stripped soil is placed on the topsoil stockpile, 2000 pounds per acre of hay mulch will be added to the surface of all newly stockpiled topsoil. The surface will then be roughened using a combination of dozers with rippers and backhoes. Once the site is prepared, the new pile will be hydroseeded using the Temporary Seed Mix described on Table 3-1. 2000 pounds per acre of wood fiber mulch and 60 pounds per acre of tacifier will also be applied to the surface with the hydro-seeding operation.

The topsoil pile will be protected by a combination of efforts, including existing berms and straw bales and revegetation as described above.

3.5.5.2 Seeding and Transplanting (continued)

may be valuable for reclamation of the site. By studying the effects of specific introduced and native species planted together on C.V. Spur during temporary reclamation, Savage Services Corporation will be able to design a permanent reclamation seed mixture most compatible with the site. At the present time, the permanent reclamation seed mixture consists of the species and rates found in Tables 3-2a and 3-2b. The mix in Table 3-3 will be used to revegetate the disturbed area on the Price River pipeline system. The pipeline system is described in Sec. 3.2.6.1 and shown on Plate 1-1. The revegetation plan for the Price River Well area also includes the planting of Sandbar Willows at a density of 150 per acre (to a distance of 200 feet from the river).

In most cases the post-mining topography will be gentle enough to drill seed along the contour. On steeper areas (greater than 4:1), a combination of hydroseeding and broadcast seeding will be utilized. Hydroseeding and broadcast seeding will be applied at twice the rate of drill seeding (as described on the seed mixture tables).

Seeding will take place after September 1 to allow for optimum growing conditions. Success of their revegetation program will be determined by comparing the percent groundcover and shrub density on the reclaimed area with that on the reference area described in Section 9.3.2.5. Success standards will be those required by UMC 817.116 (3)(iv) and UMC 817.117(c).

Spur water supply intake above Wellington is provided in Figure 7-2.

Water is diverted from the Price River into the Carbon and Price-Wellington Canals as it enters the central portion of the basin. The Carbon Canal trends north and south and passes within about one half mile of the Savage Coal Terminal Coal loading facility. This water is used for irrigation in the area and is of good quality since it is diverted as it leaves the upper portion of the basin. In the vicinity of the Savage Coal Terminal facility, the total dissolved concentration of water in the canal ranges between 250 and 600 mg/l. Water quality analysis of Carbon Canal Water is provided in Figure 7-3.

Flow in the Price River is affected by diversions of water, mainly for irrigation and by storage reservoirs. Interbasin diversions are common.

7.2.2.2 Mine Plan Area Watersheds and Surface Runoff

For the purposes of computing surface runoff and designing water diversion and sediment control structures, the watershed associated with the Savage Coal Terminal site was divided into five subareas as shown on Figure 7-4. Subareas A and C are undisturbed areas and include upslope areas to the west of the site. There were previously subareas A and B which drained into the undisturbed diversion ditch UD-1. The new Co-op road and Covol Plant have cut off most of this drainage, and now only a smaller area A drains to the diversion (see Figure 7-4). The remaining subareas comprise drainage units that are affected by operations and are subject to sediment control. Surface runoff from subareas A and B are diverted around the site by a diversion. The remaining subareas drain into sedimentation ponds on site.

Ford Chemical
LABORATORY, INC.
Bacteriological and Chemical Analysis
40 WEST LOUISE AVENUE
SALT LAKE CITY, UTAH 84115
PHONE 485-5761

Date: December 21, 1977

Name Swisher Coal Company

Address P.O. Box AU

Price, UT 84501

CERTIFICATE OF ANALYSIS

77-2502-1

Water labeled "11-29 River" received on December 7, 1977.

Analysis started on: December 7, 1977

Turbidity	32.0	NTU	Total Hardness as $CaCO_3$	1,080	mg/l
Conductivity	3,976	umhos/cm	Iron as Fe (Total)	1.301	mg/l
pH	7.69	Units	Iron as Fe (Filtered)	0.355	mg/l
Total Dissolved Solids at 180°C.	2,584	mg/l	Lead as Pb	0.012	mg/l
Alkalinity as $CaCO_3$	300.0	mg/l	Magnesium as Mg	93.6	mg/l
Arsenic as As	<0.001	mg/l	Manganese as Mn	0.155	mg/l
Bicarbonate as HCO_3	366.0	mg/l	Mercury as Hg	<0.0002	mg/l
Barium as Ba	0.08	mg/l	Nickel as Ni	<0.001	mg/l
Boron as B	0.48	mg/l	Nitrate as NO_3-N	1.08	mg/l
Cadmium as Cd	0.005	mg/l	Nitrite as NO_2-N	0.07	mg/l
Calcium as Ca	280.0	mg/l	Potassium as K	6.69	mg/l
Carbonate as CO_3	<0.01	mg/l	Selenium as Se	<0.001	mg/l
Chloride as Cl	42.0	mg/l	Silica as SiO_2	57.0	mg/l
Chromium as Cr (Total)	0.002	mg/l	Silver as Ag	<0.001	mg/l
Chromium as Cr (Hex)	<0.001	mg/l	Sulfate as SO_4	1,580	mg/l
Copper as Cu	0.014	mg/l	Sodium as Na	400.0	mg/l
Surfactants MBAS	<0.01	mg/l	Zinc as Zn	0.030	mg/l
Fluoride as F	0.54	mg/l			
Phosphorus as PO4-P	0.06	mg/l			

Ford Chemical Laboratory, Inc.

05/16/83

All reports are submitted as the confidential property of clients. Authorization for publication of our reports, conclusions, or, extracts from or regarding them, is reserved pending our written approval as a mutual protection to clients, the public and ourselves.

Ford Chemical
LABORATORY, INC.
Bacteriological and Chemical Analysis
40 WEST LOUISE AVENUE
SALT LAKE CITY, UTAH 84115
PHONE 485-5761

Date: December 21, 1977

Name Swisher Coal Company

Address P.O. Box AU

Price, UT 84501

CERTIFICATE OF ANALYSIS

77-2502-2

Water labeled "11-29 Canal" received on December 7, 1977.

Analysis started on: December 7, 1977

Turbidity	15.0	NTU	Total Hardness as $CaCO_3$	360.0	mg/l
Conductivity	1,556	umhos/cm	Iron as Fe (Total)	0.416	mg/l
pH	7.90	Units	Iron as Fe (Filtered)	0.398	mg/l
Total Dissolved Solids at 180°C.	1,012	mg/l	Lead as Pb	0.009	mg/l
Alkalinity as $CaCO_3$	238.0	mg/l	Magnesium as Mg	21.6	mg/l
Arsenic as As	<0.001	mg/l	Manganese as Mn	0.025	mg/l
Bicarbonate as HCO_3	290.3	mg/l	Mercury as Hg	<0.0002	mg/l
Barium as Ba	0.10	mg/l	Nickel as Ni	<0.001	mg/l
Boron as B	0.65	mg/l	Nitrate as NO_3-N	1.06	mg/l
Cadmium as Cd	0.002	mg/l	Nitrite as NO_2-N	0.04	mg/l
Calcium as Ca	108.0	mg/l	Potassium as K	3.53	mg/l
Carbonate as CO_3	<0.01	mg/l	Selenium as Se	<0.001	mg/l
Chloride as Cl	28.0	mg/l	Silica as SiO_2	6.10	mg/l
Chromium as Cr (Total)	<0.001	mg/l	Silver as Ag	<0.001	mg/l
Chromium as Cr (Hex)	<0.001	mg/l	Sulfate as SO_4	400.0	mg/l
Copper as Cu	0.016	mg/l	Sodium as Na	307.0	mg/l
Surfactants MBAS	<0.01	mg/l	Zinc as Zn	0.022	mg/l
Fluoride as F	0.50	mg/l			
Phosphorus as Po4-P	0.11	mg/l			

Ford Chemical Laboratory, Inc.

05/16/83

All reports are submitted as the confidential property of clients. Authorization for publication of our reports, conclusions, or extracts from or regarding them, is reserved pending our written approval as a mutual protection to clients, the public and ourselves.

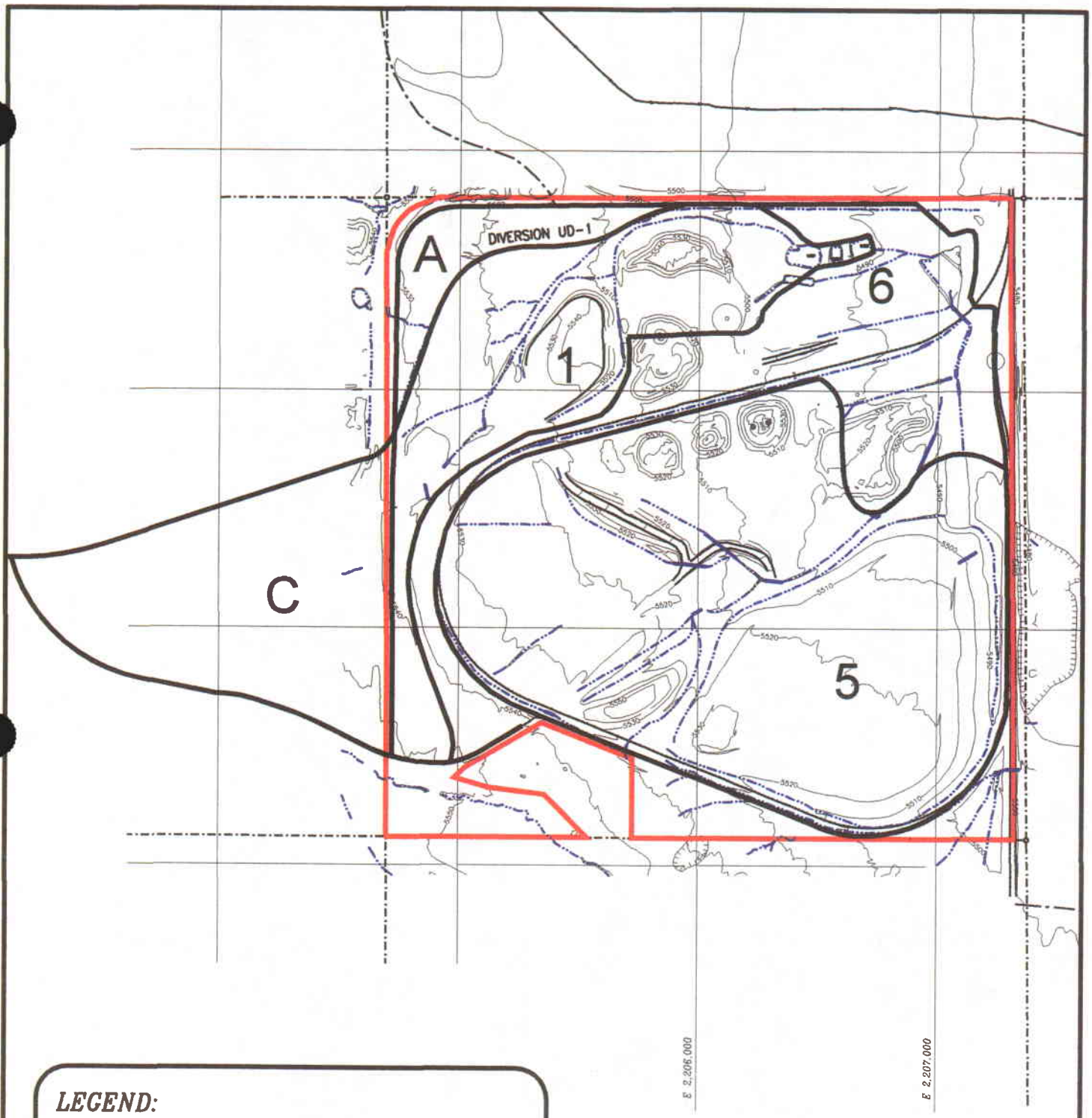

LEGEND:

DRAINAGE DIVIDE ——

AREA A IS INTERCEPTED BY THE DIVERSION.

AREA C IS ACTUALLY PART OF THE SEDIMENT POND #1 WATERSHED BECAUSE THE DIVERSION DOES NOT INTERCEPT ITS RUNOFF.

FIGURE 7-4
SAVAGE COAL TERMINAL
SUB DRAINAGE

7.2.2.2 Mine Plan Area Watersheds and Surface Runoff (continued)

The 10 year - 24 hour precipitation event for the area was determined from an isopluvial map prepared by the National Weather Service (NOAA, 1973) and was found to be 1.7 inches. The SCS curve number method (Soil Conversation Service, 1972) was used to determine runoff volumes.

Runoff Volumes

Each of the on-site subareas was further subdivided as shown on Figure 7-5 and Plate 7-2. Weighted curve numbers for the subareas were determined by the following procedure.

The percentage of each on-site sub-drainage that is occupied by the following categories was determined:

a) Roads, buildings, pads and embankments.
b) Topsoil, or soil, stockpiles.
c) Coal Stockpiles.
d) Compacted coal refuse piles.
e) Other areas, including undisturbed area.
f) Ponds.

The areas, except for ponds, were determined by making planimeter measurements on a 1:2400 scale base map. Pond areas were determined from Plate 7-4, "Sediment Ponds, Sections and Details". Aerial photographs were used as an aid in interpreting the areal extent of each category. The percentage in each category was determined by dividing the area in a given category by the total area of the sub-drainage (excluding pond area).

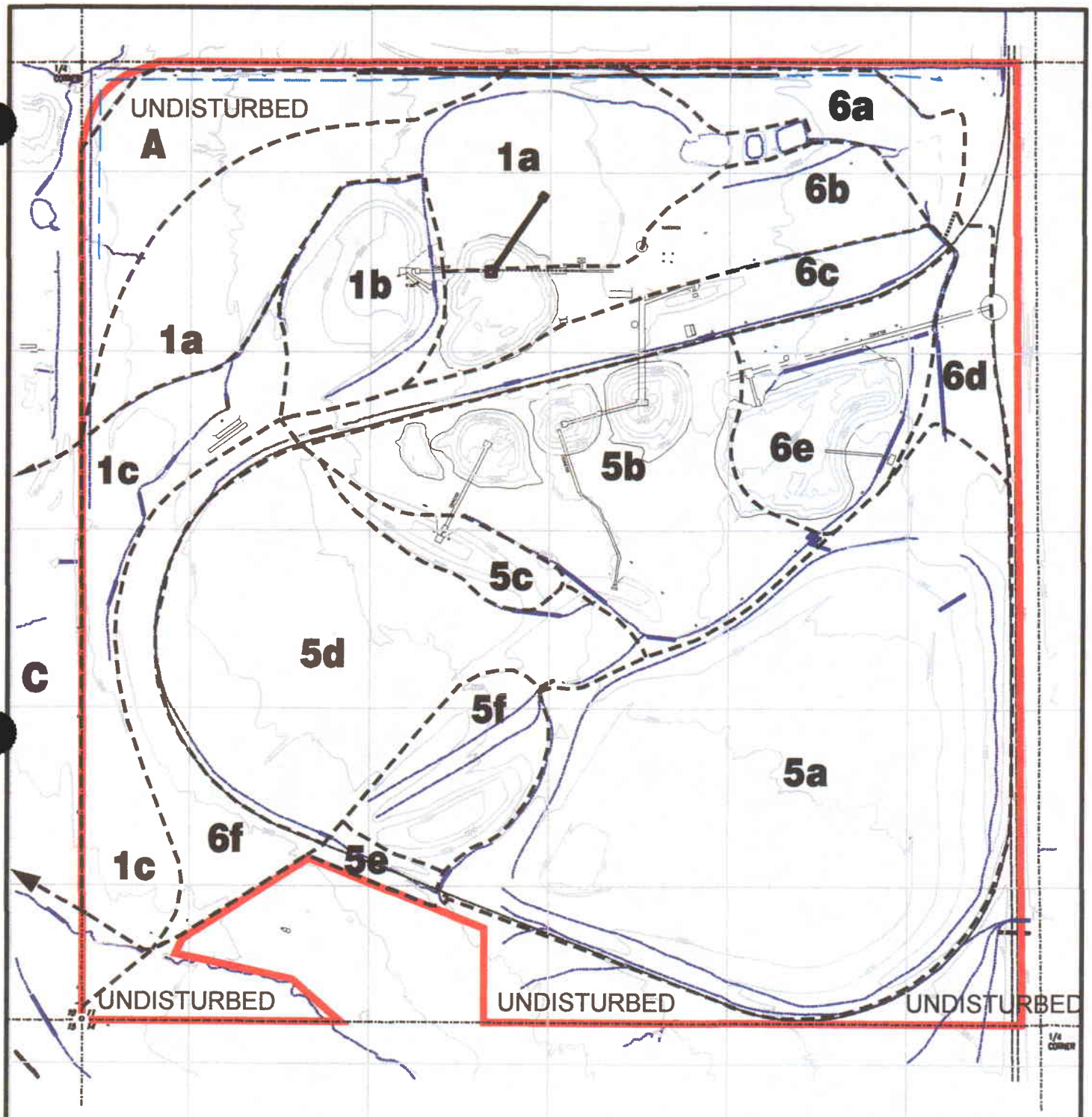

All areas starting with 1 drain into Sediment Pond No.1, all areas starting with 5 drain into Pond 5, etc. Area 1c is only partly on-site, and includes Area C.

Savage Coal Terminal

FIGURE 7-5

AREA SUBDRAINAGES

1"=400'

7.2.2 Mine Plan Area Watersheds and Surface Runoff (continued)

An average curve number for each category was determined based on soil type, general condition, and hydrologic soil group. Hydrologic soil group was determined from the oils map, Plate 2-1. In those areas where the soil type was mapped as disturbed land, hydrologic soil group "D" was assumed. The curve numbers determined are (corresponding with the above categories):

a) 89
b) 80
c) 82
d) 87
e) 87

The ponds, of course, receive direct precipitation and therefore are considered separately from the other categories.

Table 7-16 presents the percentage of each category that was measured in each sub-drainage, and the weighted curve number for each sub-drainage.

Total runoff in each sub-drainage was determined by using the weighted curve numbers, area of each sub-drainage, and SCS rainfall-runoff relationship:

Q = rainfall excess (inches)

$$Q = \frac{(P-0.2S)^2}{P+0.8S}$$

Table 7-16
WEIGHTED CURVE NUMBER DETERMINATION

Drainage Area Number	Building Roads, Pads and Embankments	Topsoil or Soil Stockpiles CN=80	Coal Stockpiles CN=87	Compacted Coal Refuse Piles CN=87	Other Areas (excluding ponds) CN=87	Pond Areas (acres)	Total Acreage (acres)	Weighted CN for the Drainage
1a	15.0	-	12.1	-	73	0.61	14.96	87
1b	68.0	-	-	-	32.0	-	5.46	88
1c*	7.43	-	-	-	92.57	0.16**	36.65	87
5a	7.7	-	-	68.9	23.4	0.73	35.87	87
5b	9.2	-	52.3	-	38.5	-	14.31	85
5c	60.2	-	-	-	39.8	-	1.94	88
5d	14.2	-	-	-	85.5	-	17.03	87
5e	57.2	-	-	-	42.8	-	0.84	88
5f	-	10.0	-	-	-	-	4.38	80
6a	5.2	-	-	-	94.8	0.22	3.81	87
6b	66.7	-	26.7	-	6.6	-	5.46	87
6c	50.0	-	-	-	50.0	-	5.55	88
6d	10.0	-	-	-	90.0	-	2.45	87
6e	-	-	-	-	100.0	-	6.80	87
6f	10.0	-	-	-	100.0	-	5.44	87
A	-	-	-	-	100.0	-	7.16	87

* Includes subdrainage C ** Depression, no drainage but not a pond.

Where:

$$S = \frac{1000}{CN} - 10$$

CN = Weighted curve number
P = 10 year - 24 hour precipitation value = 1.7 in. (NOAA, 1973)

Rainfall excess, Q, is generally determined graphically. In this instance, however, it was not practical to use the graphical method with the actual values, and therefore, the rainfall-runoff equation was used. Table 7-17 lists the runoff volume calculated for each sub-drainage.

Canal Usage and Seepage Routes

The Carbon Canal located about one-half mile to the west and uphill from the Savage Coal Terminal site (see Figure 7-6) is used to nearly year round. During the irrigation season, which extends from April to October, up to 140 cfs is diverted into the canal from the Price River. During the winter, up to 25 cfs is diverted into the canal for purposes of supplying stockwater with diversion discontinued at times when icing occurs. Seepage loss from the Carbon Canal in the vicinity of the Savage Coal Terminal site is estimated at 0.30 cfs per canal mile or about 65 acre-feet annual loss assuming flow 300 days per year. Seepage losses were estimated by a method proposed by Worstell (1976) which allows estimation of seepage losses from canal length, canal width, and soil type.

Table 7-17
SAVAGE COAL TERMINAL - RUNOFF VOLUMES ESTIMATES

Area No.	Weighted Curve No.	Q in.	A acres	Total Runoff Acre/Foot
1a	87	0.68	14.96	0.848
1b	88	0.73	5.46	0.332
1c*	87	0.68	36.65	2.08
5a	87	0.68	35.87	2.030
5b	85	0.58	14.31	0.692
5c	88	0.73	1.94	0.118
5d	87	0.68	17.03	0.965
5e	88	0.73	0.84	0.051
5f	80	0.39	4.38	0.142
6a	87	0.68	3.81	0.216
6b	87	0.68	5.46	0.309
6c	88	0.73	5.55	0.338
6d	87	0.68	2.45	0.139
6e	87	0.68	6.80	0.385
6f	87	0.68	5.44	0.308
A	87	0.68	7.16	0.406

* Includes the offsite drainage designated C, because area C drains through Pond 1.

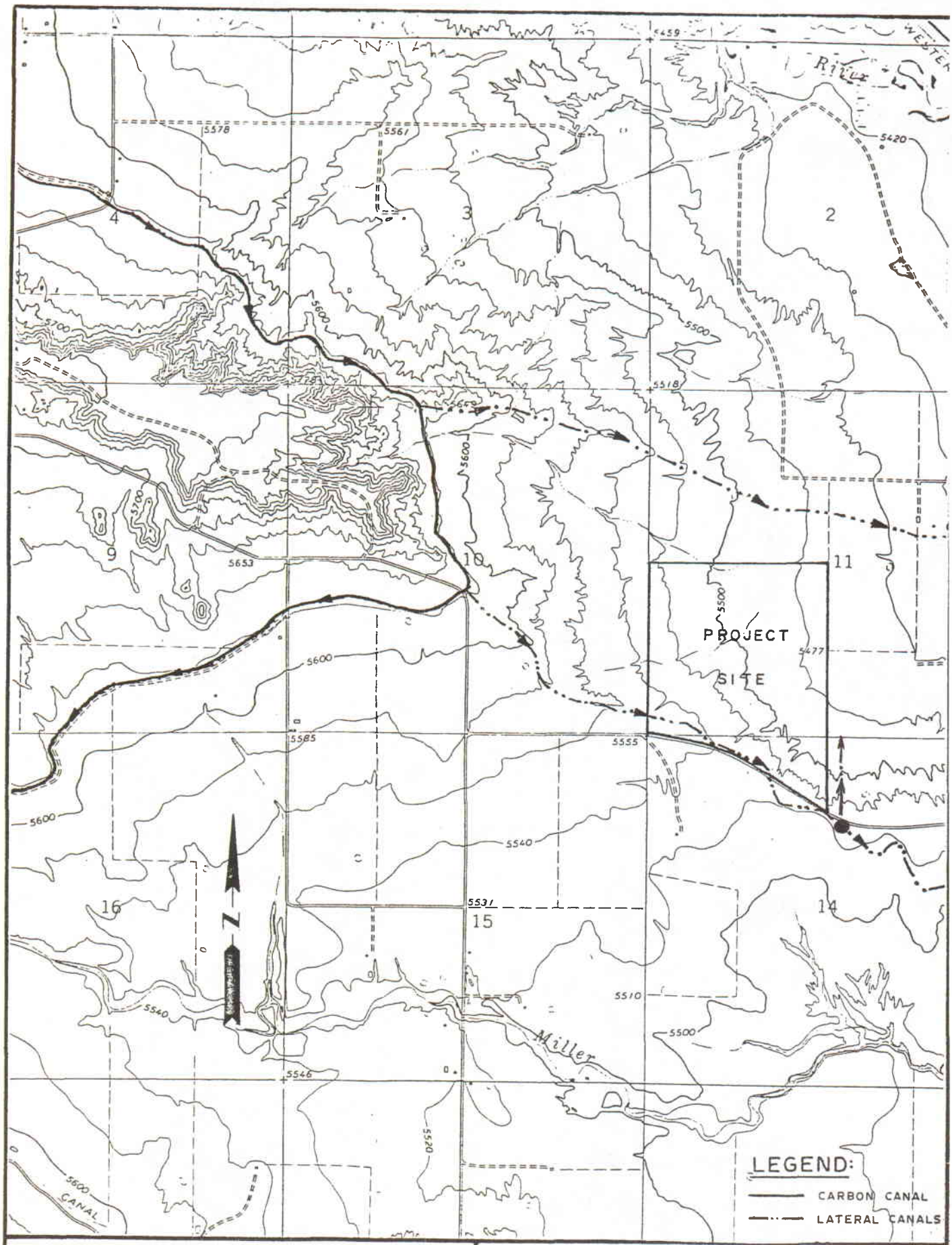

ROLLINS, BROWN & GUNNELL, INC. CONSULTING ENGINEERS	LOCATION OF IRRIGATION CANALS	FIGURE 7-6

● Irrigation Intake

7.2.2.2 Mine Plan Area Watersheds and Surface Runoff (continued)

The two lateral canals, one on the north and one on the south, are used mainly during the irrigation season during which time water is diverted from the Carbon Canal almost continuously (see Figure 7-6). The canal on the ridge to the south of the Savage Coal Terminal site is also used intermittently during the winter for purposes of providing stock water. Seepage loss from this canal is estimated at about 0.10 cfs per canal mile or about 45 acre-feet annual loss assuming flow 180 days per year. Seepage from the canal on the north is felt to not significantly affect the Savage Coal Terminal site.

Irrigation Patterns and Practices - The owners of the alfalfa fields adjacent to the Savage Coal Terminal site were contacted to determine irrigation patterns. They indicated that the fields are now irrigated at least two and up to three times per cutting with cutting occurring every 4 to 5 weeks. Irrigation begins sometime in April and the annual application is 3 to 4 acre feet per acre.

The water used to irrigate the fields is from the Carbon Canal and is of good quality. The total dissolved solids of this water ranges between 250 and 600 mg/l. There is no usage of groundwater for irrigation in the area at the present time and it is not anticipated that ground water will be used in the future due to its very poor quality.

There are no water intakes located within the permit area. One intake is located on the adjacent property; however, this intake is from the canal running south (upslope) of the property, and is located some 1200' from Savage Coal Terminal, across the county road and D. & R.G.W. railroad spur. The intake location and canal locations are shown on Plate 7-6.

Stream Channels - All stream channels in the vicinity of the site are of an ephemeral nature. The highest stream order which can be distinguished from aerial photographs for these ephemeral stream channels is 4. The banks and bottom sediments of many of the stream channels are covered by white salt deposits known as efflorescence.

7.2.2.2 Mine Plan Area Watersheds and Surface Runoff (continued)

Readily soluble salt efflorescences cover the bars, banks, and exposed pebbles of nearly all stream channels in the central portion of the Price River Basin. Efflorescences also accumulate on the general soil surface as soil water evaporates and accumulations can be especially heavy in areas where ground water is very close to the surface. Several of these areas of heavy accumulation of salt efflorescences occur at or near the Savage Coal Terminal site. These salt efflorescences are predominantly sodium and sulfate with significant amounts of magnesium (Utah Department of Natural Resources, 1972). Salt efflorescence is a major initial source of salinity in surface runoff, while the inherent characteristics of the soil determine the equilibrium salt output of a given hydrologic event (White, 1976).

Surface Water Quality - The U.S. Geological Survey in cooperation with the Utah Division of Water Rights conducted an investigation of the chemical quality of surface water in the Price River basin during 1969 and 1970. Water quality sampling was conducted at three sites during storm runoff on August 29, 1969 near the Savage Coal Terminal facility. Data which were obtained from these sites give a good indication as to the natural chemical quality of surface runoff which could be expected from Savage Coal Terminal site. The three sites include Drunkards Wash which is located several miles north of the Savage Coal Terminal, an unnamed creek located just south of Drunkards Wash, and Miller Creek which is located just south of the site. Total dissolved solids for storm runoff at these three sites was 2,770, 2,620, and 2,060 mg/l respectively. The chemical analyses of the samples from each site are given in Table 7-18.

TABLE 7-18
CHEMICAL ANALYSES OF STORM RUNOFF AT THREE SITES
NEAR THE SAVAGE COAL TERMINAL LOADING FACILITY

Parameter pH	Drunkards Wash at Highway 10 7.4 mg/l	Unnamed Creek at Highway 10 7.5 mg/l	Miller Creek near Wellington 8.0 mg/l
Silica (siO_2)	14.00	-	5.80
Calcium (Ca)	430.00	337.0	164.00
Magnesium (mg)	102.00	71.0	117.00
Sodium (Na)	272.00	377.0	310.00
Potassium (K)	11.00	-	7.00
Bicarbonate (HCO_3)	205.00	103.0	305.00
Carbonate (CO_3)	0.00	0.0	0.00
Sulfate (SO_3)	1,810.00	1,750.0	1,260.00
Chloride (Cl)	25.00	30.0	46.00
Fluoride (F)	0.80	-	0.50
Nitrate (NO_3)	0.60	0.4	4.30
Boron (B)	0.41	-	0.28
Dissolved solids	2,770.00	2,620.0	2,060.00
Hardness as $CaCO_3$	1,490.00	1,130.0	890.00
Noncarbonate hardness as $CaCO_3$	1,320.00	1,050.0	640.00

7.2.2.2 Mine Plan Area Watersheds and Surface Runoff (continued)

The natural surface runoff in the area is of poor quality with total dissolved solids ranging from 2000 to 3000 mg/l. Surface runoff from most of the site occurs infrequently. The data in Table 7-18 is indicative of the water quality to be expected from the site. Water quality samples have been collected by the Company from a drainage ditch, Station CV14W, located at the northeast corner of the property. This drainage ditch receives natural runoff and irrigation return flows from the "undisturbed" watershed subareas A and B. The water quality analysis of samples taken from this drainage ditch are presented in Table 7-19.

Irrigation water is of high quality with total dissolved solids of 200 to 600 mg/l. Levels of groundwater in the fields adjacent to the site are below the plant root zone. It would appear that irrigation practices in the area are designed to leach soluble salts from the soil resulting in high dissolved solids in irrigation return flows.

7.2.3 Surface Water Development, Control and Diversions

Water supply, drainage and sediment control are critical and essential factors to the successful operation of the Savage Coal Terminal. The main water supply for the operation is from the Price River, however, nearly all precipitation runoff is recirculated into the plant makeup water system for beneficial use following sedimentation treatment. Shallow groundwater which occurred prior to site development is now intercepted and diverted around the area for the benefit to site stability.

Table 7-19

CHEMICAL ANALYSIS OF SURFACE WATER
FROM DITCH NORTH OF SITE

Station CV14W	12/13/79	1/23/80	2/29/80
Turbidity NTU		No Data	
Conductivity	8,000.000	Water Froze	7,700.000
pH	8.100		8.200
TDS mg/l	5,200.000		1,750.000
Alkalinity $CaCO_3$ mg/l			
Hardness $CaCO_3$			
As			
HCO_3			
Ba			
B			
Cd			
CO_3			
Cl mg/l	110.000		94.000
Cr (Total)			
Cu			
Surfactants MBAS			
F			
PO_4 -Pl			
Fe (Total) mg/l	.160		.690
Fe (Filtered)			
Pb			
Mg			
Mn mg/l	.016		.060
Hg			
Ni			
NO_3 -N mg/l	11.800		.280
NO_2 -N			
K			
Se			
SiO_2			
Ag			
SO_4 mg/l	4,200.000		3,000.000
Na			
Zn			
Oil and Grease mg/l	17.000		144.700
Suspended Solids mg/l	42.000		111.000
Acidiity			

7.2.3.1 Water Supply

Culinary water is supplied by Price River Water Improvement District through a buried waterline to the facility.

The primary source of water for the facility is from the Price River. A shallow, high-volume well is installed at the Price River north of the site and is pumped on demand via a 6-inch pipeline into a sump located at the northeast corner of the site (see Plates 3-2 and 4-1).

Savage Industries, Inc. has acquired rights to 357 shares of water from Scofield Reservoir. The usage at the facility is measured by a totalizing flowmeter which monitors incoming water from both the pipeline and sedimentation pond sources. Present usage averages approximately 25 acre-feet per year.

7.2.3.2 Undisturbed Runoff Diversions

Runoff from approximately 7.16 acres of undisturbed area to the west of the operations area is intercepted by a diversion ditch and routed around the west and north edge of the facilities area. This undisturbed area includes subarea A shown on Figure 7-4. The diversion is designed to accommodated the peak discharge fro a 10 year - 24 hour precipitation event. The diversion is designed, constructed and maintained to prevent additional contributions of suspended solids to runoff outside the permit area.

7.2.3.2 Undisturbed Runoff Diversions (continued)

Determination of Peak Discharges from Off-Site Area A

The OSM Storm Computer Program was used to determine the peak discharges from the undisturbed area A whose runoff is intercepted by the diversion shown on Figure 7-4 and Plate 7-2. Physical basin parameters were determined from topographic maps. The curve number of 87 was determined from the soil survey and vegetation characteristics. For the 10 year - 24 hour rainfall event, the highest peak discharge to be conveyed by the diversion was found to be 6.3 cfs.

Size of Diversion Channel

The diversion, shown on Figure 7-2, is intended to intercept and divert runoff from drainage A. It was excavated in the native soil, and is earth lined. Low velocities and regular maintenance serve to impede erosion. The channel is maintained with a minimum cross-sectional area of 4 ft^2. A typical diversion cross section is provided in Plate 7-3.

The length of the diversion is about 2,200 ft., and the elevation change along it is about 35 ft. The average slope of the channel is therefore about 0.016.

Manning's formula was used to determine the adequacy of the channel. Manning's N, the roughness coefficient, was assumed to be 0.05.

The water depth, in the channel, is about 0.77 ft. for a discharge of 6.3 cfs. When depths of 0.5 ft. and 1.0 ft. were assumed, the discharge was found to be about 3.0 and 10.0, respectively. In all cases channel flow velocities are less than 3 ft. per second.

7.2.3.2.1 Disturbed Area Runoff

Disturbed area runoff from the site is routed to the sediment ponds via collection ditches, as shown on Plate 3-2. Collection ditches vary in size and configuration; however, ditches will be maintained at minimum cross-sectional areas as shown on Plate 7-5.

7.2.3.3 Sedimentation Control

Sedimentation Ponds and on-site drainage controls are shown on Plate 7-2. Sedimentation ponds are located to collect and treat runoff from various sub-drainages. The ponds are designed to store at least one year of sediment plus the runoff volume from a 10 year - 24 hour rainfall. The sedimentation ponds are arranged in series such that all runoff from disturbed areas passes through Sedimentation Pond No, 6. The outlet of Sedimentation Pond No. 6 is a UPDES discharge monitoring and Compliance Point.

Water from Pond 6 is normally not discharged, but is placed back into the raw water feed for the preparation plant for re-use.

The sedimentation and other ponds will be cleaned periodically to maintain at least one year's sediment storage capacity. Cleaning is accomplished by a backhoe or dragline.

The drainage from the refuse pile is also collected in the settling pond with the other runoff water; therefore, the system is essentially a closed type, with no expected discharge, except in the event of a storm which exceeds the pond design limits.

Sedimentation Pond Designs

The ponds are built below the level of the natural ground. Overflow of adequate capacity is provided at, or near, original ground level with a compacted berm approximately three feet high around the pond. The berm is for added protection from overflow only and does not serve as a dam. All ponds were constructed under the supervision of, and certified by, a registered, professional engineer.

Sedimentation Pond design specifications and details are provided in Plate 7-4. The design capacities of each of the existing sedimentation ponds together with the required capacities for sediment storage and runoff volume are provided in Table 7-21.

Pond Number 1 refers to the series of ponds designated as 1, 2, and 3 on Plate 7-2. Pond Number 1 collects and treats runoff from sub-drainage areas 1 and C shown on Figure 7-4. Overflows from Pond Number 1 and Pond Number 5 flow to Pond Number 6.

The required runoff volume capacities reported in Table 7-21 were determined by adding the direct precipitation on the pond to the runoff volume from a 10 year - 24 hour rainfall for each of the sub-areas contributing to the pond. The direct precipitation to the ponds from a 10 year - 24 hour precipitation event is provided in Table 7-22. As shown on Table 7-22, the runoff from a 10 year - 24 hour precipitation event plus

Table 7-20

DIVERSION DESIGN CALCULATIONS

OSM CHANNEL FLOW		OSM CHANNEL FLOW		OSM CHANNEL FLOW	
6.3	Q	0.	Q	0.	Q
1.	Z	1.	Z	1.	Z
0.	Y	0.5	Y	1.	Y
0.016	S	0.016	S	0.016	S
0.05	N	0.05	N	0.05	N

NORM. FLOW		NORM. FLOW		NORM. FLOW	
2.495078998	V	1.988722023	V	2.848320997	V
2.524970153	A	1.5	A	3.5	A
6.3	Q	2.983083035	Q	9.969123489	Q
1.	Z	1.	Z	1.	Z
2.5	W	2.5	W	2.5	W
.7714323391	Y	0.5	Y	1.	Y
0.016	S	0.016	S	0.016	S
0.05	N	0.05	N	0.05	N

For:

Q = 6.3 cfs Y = 0.5 ft Y = 1.0 ft

Where:

Q = discharge, cfs

Z = side slope, H:V

W = bottom width, ft

Y = flow depth, ft

S = bed slope, rise/run

N = roughness coefficient

sediment storage would be slightly larger than the pond capacities for Ponds 1 and 5; however, since these ponds are in series with Pond 6, and excess runoff would easily be contained within Pond 6 with no overflow. Runoff volume estimates for the various sub-areas are developed in Table 7-17.

The sediment capacity requirements were determined using the one year soil loss estimated by the USLE. Sediment capacity estimates are developed below:

Table 7-21
SEDIMENTATION POND DESIGN CAPACITIES

Pond [1] Number	Design Capacity (acre - feet)	Required [2] Runoff Capacity (acre - feet)	Required [3] Sediment Capacity (acre - feet)
1	3.300	3.346	0.022
5	4.199	4.101	0.105
6*	2.150	1.726	0.025
Total	9.649	9.173	0.152

1 Pond Number 1 includes ponds 1, 2 and 3 in Series.

2 Required Runoff capacity includes runoff from a 10 year - 24 hour rainfall plus direct precipitation on the ponds.

3 Required Sediment Capacity is the estimated one year soil loss as determined from the USLE.

a.* Design Capacity is <u>excluding</u> filter dikes.

b. Flow through filter dikes is approximately 40 gpm, based on measurements.

c. Water entering pond No. 6 will be at a rate of approximately 40 gpm (pumping), except in the event of inflow from Ponds 1 or 5.

d. Porosity of filter dikes allows for passage of 40 gpm by actual measurement.

e. Design capacity is <u>excluding</u> static water level allowing for plant or thickener overflows.

Sedimentation Pond #6
Volume Calculations

Area of Top	19,458 ft^2
Area of Bottom	15,228 ft^2
Average Area	17,343 ft^2
Pond Depth (above pipe)	5 ft.
Pond Volume (with dikes)	1.990 ac. ft.
Dike Volume	0.62 ac. ft. (40% voids)
Pond Volume (excluding dikes)	1.618 ac. ft.
40 gpm Recirculation (24 hours)	+0.177 ac. ft.
Total Pond Volume (10 yr. 24 hrs.)	1.795 ac. ft.
Required Volume	1.770 ac. ft.

Soil Loss and Sedimentation

The Universal Soil Loss Equation (USLE) was used to predict the rate of erosion for each on-site sub-drainage. The method, while having limitations, was useful because no better method was available. The USLE is,

$$A = (R)(K)(LS)(C)(P)$$
$$= \text{erosion rate (ton/acre/year)}$$

The variables, R, K, LS, C, and P, are defined in the following discussion.

R is the rainfall factor, which, simply stated, accounts for the erosive force of specific rainfall. R is either found on an isoerodent map, or calculated from

$R = 27P^{2.2}$, where P is the 2 year - 6 hour precipitation value (Barfield, Warner, and Haan, 1981). P, for Savage Coal Terminal, is 0.8 inch, and therefore, R is 16.5 (NOAA, 1973).

Table 7-22
DIRECT PRECIPITATION TO SEDIMENT PONDS*

Pond No.	Pond Area (acres)	Volume (ft^3)	Volume (acre-feet)
1	0.61	3754	0.0864
5	0.73	4505	0.1034
6	0.22	1360	0.0312

* 10 year - 24 hour precipitation value is 1.7 inch (NOAA, 1973).

7.2.3.3 Sedimentation Control (continued)

K is the soil erodibility factor. Appendix A of Preliminary Guidance for Estimating Erosion on Areas Disturbed by Surface Mining Activities in the Interior Western United States (EPA, 1977), lists K values for all established soil series in the western U. S. The K value for the native soils, except the Saltair series, is 0.43. K for the Saltair series is 0.55. Ka values are unknown for coal piles, coal refuse piles, roads, embankments, and other disturbed lands. A certain amount of judgment had to be exercised in selecting K values for the above types of areas. The K value for loose coal is likely relatively high, due to coal's low density and a large percentage of fines. A K of 0.60 was therefore assumed for the sub-drainages containing coal stockpiles.

The K value for intentionally compacted constructions, such as refuse piles, roads and embankments was assumed to be 0.50. The K value for relatively undisturbed native soils was assumed to be 0.43.

LS, the length slope factor, accounts for the length and steepness of the slopes on which erosion occurs. Length and slope estimates for the various sub-drainages are listed in Table 7-23. LS for the various areas was determined from these estimates using the procedure from the previously mentioned EPA reference (EPA, 1977).

The cover factor, C, accounts for the effects of various types of ground cover on erosion. For no ground cover a value of 1.0 is suggested. In this analysis, C was assumed to be 1.0 for most areas. For three relatively undisturbed areas, C was assumed to be 0.22 based on percentage and type of cover.

Table 7-23
EROSION RATE DETERMINATION

Area No.	R	K	L(A)	S%	LS	C	P	A t/a/yr	Area (acres)	Erosion Rate (tons/yr)
1a	16.5	0.60	150	1	0.15	1.00	1.0	1.485	14.96	22.216
1b	16.5	0.50	250	2	0.27	1.00	1.0	2.228	5.46	12.165
1c	16.5	0.50	70	2	0.18	1.00	1.0	1.485	8.54	12.682
5a	16.5	0.50	800	2	0.38	1.00	1.0	3.135	35.87	112.453
5b	16.5	0.60	450	2	0.32	1.00	1.0	3.168	14.31	45.334
5c	16.5	0.50	70	4	0.35	1.00	1.0	2.888	1.94	5.603
5d	16.5	0.60	700	2	0.36	1.00	1.0	3.564	17.03	60.695
5e	16.5	0.50	150	1	0.15	1.00	1.0	1.238	0.84	1.040
5f	16.5	0.43	400	3	0.44	0.22	1.0	0.687	4.38	3.008
6a	16.5	0.50	200	2	0.25	1.00	1.0	2.063	3.81	7.860
6b	16.5	0.60	500	2	0.33	1.00	1.0	3.267	5.46	17.838
6c	16.5	0.50	100	2	0.20	1.00	1.0	1.650	5.55	9.158
6d	16.5	0.50	100	1	0.13	1.00	1.0	1.073	2.45	2.629
6e	16.5	0.50	300	2	0.28	1.00	1.0	2.310	6.80	15.708
6f	16.5	0.43	110	2	0.21	0.22	1.0	0.328	5.44	1.784

1) L was measured on topographic map.

2) C value of 0.22 was derived from Table 4, EPA-908/4-77-005, 1977. Assumption was, no appreciable canopy, weeds, 25% ground cover.

	tons/yr	ac/ft/yr
1	47.063	0.022
5	228.133	0.105
6	54.977	0.025
Total	330.173	0.152

7.2.3.3 Sedimentation Control (continued)

P is the erosion control practice factor. When no erosion control measures are taken, P is assumed to be 1.0. In this analysis, P is assumed to be 1.0.

Erosion rates were estimated for each of the sub-drainages using the USLE factors and basin areas as shown in Table 7-23. The total weight of sediment eroded from each sub-drainage (in on year) was determined by adding the erosion rates for all of the sub-areas in each sub-drainage. A unit weight of 100 lbs/ft ^{3} was assumed in order to determine the yearly volume of soil loss that may be delivered to the ponds (a sediment delivery ratio of 1.0 was assumed). The required sediment capacity provided in Table 7-21 represents the total annual soil loss from the dub-drainage contributing to the pond.

Outlet Designs

The design specifications for outlet structures are listed in Plate 7-4. A stage-discharge relation was developed for the outlet channels using manning's equation with the channel dimensions listed in Plate 7-4 and a roughness coefficient of 0.03.

An inflow hydrograph to each was derived using the SCS runoff Curve Number procedures and the associated computer model TR-20. A weighted curve number was obtained for each sub-drainage using the procedures described in Table 7-16.

Table 8-6

SEEDBED QUALITY MATERIAL VOLUMES

(for Acres to be Disturbed in 2006)

Seedbed Quality Material - Approximate Volumes

Mapping Unit	Suitable Stripping Depth	Acreage	Volume - Bank Cubic Yards BCY
Chipeta - Chc	6" avg.	1.81	1460
Billings - Blb	7" avg.	4.80	4517
Topsoil Stockpile	NA	NA	61,615
		Total Seedbed Quality Material Available (After 2006 Stripping)	67,592

8.6 Topsoil Replacement and Use of Selected Overburden Material (continued)

demonstrates that this material is rated good utilizing soil suitability standards, (see Table 8-7 for chemical analysis for refuse material).

Based on the suitability analysis results for the refuse disposal area and the fact that baseline vegetation studies at C.V. Spur (Section 9.0) indicates that vegetation is shallow-rooted due to the close proximity of Mancos Shale to the soil surface, all disturbed area should be able to be adequately reclaimed to the established vegetation standards with an even redistribution of stockpiled material.

8.7 Removal, Storage and Protection of Soils

Future areas of disturbance have been identified to the extent possible and plans have been made to remove all suitable topsoil prior to disturbance (see Plate 3-2). Most of the plans for future disturbance consist of land needed for coal stockpile areas.

When additional storage area becomes necessary topsoil will be stripped using standard earth moving equipment and taken to the topsoil piles. (See Plate 3-2 for location of stockpiles). A qualified Soils Scientist will be on site during topsoil stripping to ensure adequate recovery of soils. The topography on Plate 3-2 represent the "as-built" or present configuration of the topsoil pile.

Table 8-7

SOIL ANALYSIS OF C.V. SPUR REFUSE MATERIAL

	Wet Refuse	Suitability*	Dry Refuse	Suitability*
pH	7.70	Good	7.62	Good
E.C. mmhos/cm	4.50	Good	4.80	Good
Saturation %	44.70	N/A	30.30	N/A
Soluble Ca (meq./l)	13.00	N/A	15.50	N/A
Soluble Mg (meq./l)	22.10	N/A	27.90	N/A
Soluble Na (meq./l)	10.70	N/A	10.20	N/A
SAR	2.55	Good	2.19	Good
ESP	2.44	N/A	1.93	N/A
Boron ppm**	0.30	Good	0.25	Good

* Based on National Soils Handbook 1978, NSH - Part II (403.6(a)).

** Based on WDEQ Guideline No. 1 Table 1-3 for boron limits.

If any erosion is detected after revegetation which may result in the possibility of exposure of the covered waste material, remedial steps will be taken as described in Section 3.5.5.4.

8.7 Removal Storage and Protection of Soils (continued)

The in-place depths of seedbed quality material available for reclamation of the project area is listed on Table 8-8 by map unit. The table includes the map unit, map unit components, depth of horizon, rating (from Table 8-4), percent of map unit, recommended depth of stripping and the restrictive features of the suitable material. Volumes of seedbed quality material in stockpile or in-place and to be disturbed in the future can be found in Table 8-6.

All of map unit ChC can be stripped to 6 inches. Included with the Chipeta are other soils that can be stripped to the same depth. The soils report in Appendix 8-2 indicates the Chipeta in the track loop area can be stripped from 2" to 7", with an average of approximately 6".

Map Unit Blb (Billings) can be stripped to a depth of 7", based on previous soils samples and Table 8-4.

Disturbed lands in the mapped area have variable surface materials. Gravelly road till does not have adverse chemical characteristics but may be too gravelly to be used as a reclamation material. Clayey subsoil in areas mapped as disturbed lands may be excessively salty. Much of the area mapped as disturbed land has surface contamination with coal.

Map unit KmB can be stripped to 9 inches. See Table 8-6 for available volume of that soil unit. This is based on the soils report in Appendix 8-2.

Barren areas and salty spots should be avoided in stripping. This includes the Saltair Unit, for which a variance in topsoil stripping is requested due to poor quality. (See Plate 8-1 for locations.)

Prior to the Reclamation Act of 1977 and Utah Interim Program, 77.2 acres of C.V. Spur were disturbed and topsoil not salvaged.

8.7 Removal, Storage and Protection of Soils (continued)

Of the remaining 76.8 acres, 48.7 acres have had topsoil stripped as of April 2002, leaving approximately 28.1 acres within the permit area that will need to have available topsoil removed, if disturbed. An additional 6.61 acres are to be stripped in 2006. Plate 3-1 indicates disturbance created before and after May 1978. Topsoil material that has been stockpiled and in-place soil to be disturbed contain insufficient volumes of material to cover all of the projected disturbed area to a minimum of six (6) inches. Thus, as discussed in Sections 8.5 and 8.6, the Disturbed Land Map Unit will be revegetated in-place since no better topsoil material exists for reclamation.

All post-law disturbance and the entire refuse area (a total of 55.31 acres after the proposed 2006 stripping) will receive a minimum cover of six inches of topsoil/subsoil. Table 8-6 provides the volumes of soil currently in storage.

Even distribution of six inches over 55.31 acres would require 44,617 cubic yards of material. Therefore, the 67,592 cubic yards of topsoil/subsoil currently in storage is enough to accommodate the proposed reclamation plan.

8.8 Nutrients and Soil Amendments

Soil tests will be taken in materials to be used for final reclamation in order to evaluate the need for soil amendments and nutrients. Soil testing will be performed by a qualified laboratory which uses accepted analytical procedures.

Table 8-8

DEPTHS OF SUITABLE TOPSOIL AVAILABLE FOR SEEDBED MATERIAL

(by map unit)

Mapping Unit	Component	Depth (in.)	Rating	Percent of Map Unit	Available Depth Suitable Material (restrictive feature of recommended material)
Chc	Chipeta	0-3	Fair	80	6 inches (sodic and clayey)
		3-19	Fair/ Poor		
	Killpack	0-8	Fair	10	6 to 9 inches
	Other Soils	var	var	10	6 inches
DL	Disturbed Land	0-12	Poor	N/A	0 inches (various restrictive features)
		12-60	Poor		
KmB	Killpack - high water table	0-10	Fair	80	6 inches (clayey and sodic
	Other	var	var	20	0 inches
Blb	Billings	0-7	Fair	100	7 inches

N/A - data not available var = variable

Table 8-9

TOPSOIL MASS BALANCE TABLE

(after 2006 stripping)

Topsoil Available	67,592 cu. yds.
Disturbed Area	132.5 ac.
Pre-Law Disturbance	77.2 ac.
Post-Law Disturbance	55.3 ac.
Topsoil Required (Post-Law)	44,617 cu. yds.
*Topsoil Required (All Disturbance)	106,883 cu. yds.
Max. Area for 6" Redistribution	83.79 ac.

* As discussed in Sections 8.5 and 8.6, pre-law disturbed areas will utilize in-place soils, since no better topsoil exists for reclamation.

8.7 Removal, Storage and Protection of Soils (continued)

discussed in Sections 8.5 and 8.6, the Disturbed Landfill will be used as a substitute for topsoil since no better topsoil material exists for reclamation.

8.8 Nutrients and Soil Amendments

Soil tests will be taken in materials to be used for final reclamation in order to evaluate the need for soil amendments and nutrients, as described in the following Section 8.9. Soil testing will be performed by a qualified soils scientist, and analyses will be performed by a qualified laboratory which uses accepted analytical procedures.

8.9 Effects of Mining Operations on Soils, Nutrients and Soil Amendments to be Used

The Disturbed Landfill which has been impacted by mining operations has some inherit problems that will be addressed prior to reclamation. These include gravelly road fill, clayey subsoil, and surface contamination with coal fines. The coal fines and gravelly road fill will be removed by standard earth moving equipment. The clayey subsoil will be deep chiseled to eliminate compacted zones.

The disturbed soils samples show it to be of a quality similar to the stockpiled soil on site. This material can be upgraded as needed to provide a plant growth medium; therefore, no soil substitute is necessary for reclamation of the disturbed soil areas.

Additional soil testing will be performed on the disturbed soils prior to regrading and final reclamation.

Location and number of soil tests will be determined in

consultation with the Division at least 60 days prior to final reclamation.

All soils will be properly fertilized to bring them up to the level necessary for vegetation establishment. Fertilizer application will be based on soil test analysis as discussed in Section 8.8.

8.10 Mitigation and Control Plans

All suitable seedbed quality material (topsoil) will be stripped and stockpiled prior to disturbance. Topsoil stockpiles will be placed on a stable surface in an attempt to limit wind and water erosion and other factors which would lessen the capability of the material to support vegetation. Every effort will be made to minimize the area of disturbance to only that area needed immediately. A quick-growing cover of annual and perennial plants will be seeded or planted during the first desirable planting period after disturbance. Topsoil stockpiles will remain in-place and undisturbed until the material is to be redistributed on disturbed areas.

Stipulation UMC 817.23-(HS)-(1)

An as-built survey was performed on the soil stockpiles, as required. Results of the survey show a total of 49,475 cubic yards of material presently in storage, as indicated on Table 8-9. The survey is summarized in Appendix 8-1, and the as-built map of the piles is shown on Plate 8-2.

In April 2002, an additional 12,140 cubic yards of topsoil were stripped and added to the Topsoil Stockpile. The topsoil and subsoil piles were blended together into one pile, roughened, mulched and seeded. This increased the volume of the Topsoil Stockpile to 61,615 cubic yards. In 2006, an additional 5977 cubic yards of topsoil will be stripped and aded to the topsoil pile, bringing the total storage volume to approximately 67,592 cubic yards.

8.11 References

Black, C.A., 1965, Methods of Soil Analysis. American Society of Agronomy Mono. No. 9 Parts 1 and 2. Madison, Wisconsin. 1572 pgs.

USDA, Soil Conservation Service. Soil Survey Staff, 1975. Soil Taxonomy - a basic system of soil classification for marking and interpreting soil surveys, USDA Agricultural handbook No. 436.

USDA, 1978 Soil Conservation Service, National Soils Handbook (Compedium of SCS in-house memos) Part II (403.6 (a)).

USDA, Soil Survey Staff, 1951, Soil Survey Manual, USDA Agricultural Handbook No. 18.

USDA, Soil Conservation Services, 1979, Soil Survey Carbon Emery Area, Utah.

USDA, 1974, Guidelines to Making Soil Interpretations, Branch of Soils, Division of Watershed Management, Rocky Mountain Region.